"APPROVED FOR RELEASE: 04/03/2001 CIA-RDP86-00513R001756220001-7

TOMESCU, Margareta, ing.

Poroplastics. St si Teh Buc 14 no.10:8-9 O '62.

APPROVED FOR RELEASE: 04/03/2001 CIA-RDP86-00513R001756220001-7"

"APPROVED FOR RELEASE: 04/03/2001 CIA-RDP86-00513R001756220001-7

TOMESCU, Mihai

The six-year plan in action. Constr Buc 15 no.697:1 18 My '63.

1. Din cercul de fotoamatori de la I.C.M. n.1, Bucuresti.

APPROVED FOR RELEASE: 04/03/2001 CIA-RDP86-00513R001756220001-7"

"APPROVED FOR RELEASE: 04/03/2001 CIA-RDP86-00513R001756220001-7

TOMECSU Nicolae, ing.; NUSU, Ion, ing.

Worker organization and wages in total agreement. Constr Buc 17 no.795:4 3 Ap '65.

1. General Directorate of Construction Assemblage, Ministry of Construction Industry.

APPROVED FOR RELEASE: 04/03/2001 CIA-RDP86-00513R001756220001-7"

"APPROVED FOR RELEASE: 04/03/2001 CIA-RDP86-00513R001756220001-7

TOLEDO, N: TOTH, S: LAZARESCU, F

Verification of embankment compactness by geophysical methods; electrometry. p.35[illegible]

HIDROTEHNICA. (Asociatia Stiintifica a Iginerilor si Tehnicienilor din Romina) Bucuresti, Romania Vol. 4, no. 11, Nov. 1959

Monthly List of East European Accessions (EMAI) LC, Vol. 9, no.2, Feb. 1960

Uncl.

APPROVED FOR RELEASE: 04/03/2001 CIA-RDP86-00513R001756220001-7"

"APPROVED FOR RELEASE: 04/03/2001 CIA-RDP86-00513R001756220001-7

TOMESCU, N.

Sources of electric energy for socialist agricultural units.

p. 42 (Mecanizarea Si Electrificarea Agriculturii) No. 1, Jan. 1957, Bucuresti, Rumania

SO: MONTHLY INDEX OF EAST EUROPEAN ACCESSIONS (EEAI) LC, VOL. 7, NO. 1, JAN. 195 8

APPROVED FOR RELEASE: 04/03/2001 CIA-RDP86-00513R001756220001-7"

"APPROVED FOR RELEASE: 04/03/2001 CIA-RDP86-00513R001756220001-7

PROCESSES AND PROPERTIES INDEX

7

Determination of iodine in organic substances. T. Tomescu. *Bul. Soc. Stiinte Farm. Romania* 3, 557-8 (1938); *Chimie & industrie* 40, 655.—The org. matter is destroyed with a mixt. of HNO_3, H_2SO_4 and $HClO_4$ in a flask connected to a scrubber containing Br water. The latter oxidizes the liberated I to HIO_3 which is titrated (after removal of excess Br) in Ac OH soln. by means of KI and $Na_2S_2O_3$. A. Papineau-Couture.

ASM-SLA METALLURGICAL LITERATURE CLASSIFICATION

APPROVED FOR RELEASE: 04/03/2001 CIA-RDP86-00513R001756220001-7"

"APPROVED FOR RELEASE: 04/03/2001 CIA-RDP86-00513R001756220001-7

TOMESKU, I.; POPOV, I [translator]

Trade cooperative societies in Rumania. Prom. koop. 13 no.4:36-37 Ap '59. (MIRA 12:6)

1.Nachal'nik otdela organizatsionnoy i kul'turno-massovoy raboty TSentral'nik soyuza remeslennykh kooperativov Rumynskoy Narodnoy Respubliki (for Tomesku).
(Rumania--Cooperative societies)

APPROVED FOR RELEASE: 04/03/2001 CIA-RDP86-00513R001756220001-7"

"APPROVED FOR RELEASE: 04/03/2001 CIA-RDP86-00513R001756220001-7

GHITESCU, T., dr.; TOMESCU, I., dr.; IONESCU, L., dr.; MUNTEANU, I., dr.

Some clinical and therapeutic aspects of arterial embolisms of the extremities. Med. intern. 15 no.3:323-332 Mr '63.

1. Lucrare efectuata in Clinica de chirurgie "Fundeni" (conducator: Prof. Voinea Marinescu).

(EMBOLISM) (AXILLARY ARTERY) (ILIAC ARTERY)
(FEMORAL ARTERY) (POPLITEAL ARTERY) (HEART DISEASES)
(CEREBRAL EMBOLISM AND THROMBOSIS)

APPROVED FOR RELEASE: 04/03/2001 CIA-RDP86-00513R001756220001-7"

"APPROVED FOR RELEASE: 04/03/2001 CIA-RDP86-00513R001756220001-7

SOV/4982

International symposium on macromolecular chemistry, Moscow, 1960.

Mezhdunarodnyy simpozium po makromolekulyarnoy khimii SSSR, Moskva, 14-18 iyunya 1960 g.; doklady i avtoreferaty. Sektsiya I. (International Symposium on Macromolecular Chemistry Held in Moscow, June 14-18, 1960; Papers and Summaries. Section I.) [Moscow, Izd-vo AN SSSR, 1960] 346 p. 5,500 copies printed.

Sponsoring Agency: The International Union of Pure and Applied Chemistry, Commission on Macromolecular Chemistry

Tech. Ed.: T. V. Polyakova.

PURPOSE: This collection of articles is intended for chemists and researchers interested in macromolecular chemistry.

COVERAGE: This is Section I of a multivolume work containing scientific papers on macromolecular chemistry in Moscow. The material includes data on the synthesis and properties of polymers, and on the processes of polymerization, copolymerization, polycondensation, and polyrecombination. Each text is presented in full or summarized in French, English, and Russian. There are 47 papers, 28 of which were presented by Soviet, Rumanian, Hungarian, and Czechoslovakian scientists. No personalities are mentioned. References accompany individual articles.

Tinyakova, Ye. I., B. A. Dolgoplosk, T. G. Zhuravleva, B. N. Kovalevskaya, and I. N. Kurmagina (USSR). The Synthesis of Cis- and Trans-Diene Polymers on Oxide Catalysts and a Study of Their Structure and Properties 13

Kefeli, T. Ya., G. V. Korolev, Ts. M. Filippovskaya (USSR). Synthesis and Polymerization of Esterified Polyacrylates 47

Bohdanecký, M., J. Mleziva, A. Šternschuss, and V. Zvonař (Czechoslovakia). The Structure of Hardened Unsaturated Polyesters 58

Zil'berman, Ye. N., A. Ye. Kulikova, and N. M. Teplyakov (USSR). New Method of Preparation of Polyesters and Their Oligomers 64

Bohdanecký, M., and A. Šternschuss (Czechoslovakia). Analysis of Cross-Linked Polyesters 72

Yanchevskiy, A. A., Ye. P. Volynskaya, M. G. Krakovyak, L. V. Kukhareva, and G. A. Gladkovskiy (USSR). On the Synthesis and Properties of Crystalline Polymers of the Types of Poly-p-Xylylene and Polyphenylenemethyl 90

Matsoyan, S. G. (USSR). Cyclic Polymerization and Copolymerization of Divinylacetals 101

Mushina, Ye. A., A. I. Perel'man, A. V. Topchiyev, and B. A. Krentsel' (USSR). Synthesis of Crystalline Polyvinylcyclohexane 115

Arbuzova, I. A., and Ye. N. Rozenskiy (USSR). Polymerization of Polyfunctional Compounds 125

Solomon, O. F., M. Dimonie, K. Ambrush, and M. Tomescu (Rumania). Polymerization of Vinylcarbazol in the Presence of Butyllithium and Titanium Chloride Type Catalysts 131

Korshak, V. V., S. L. Sosin, and V. P. Alekseyeva (USSR). On the Preparing of the New Types of Linear Polymers by the Reaction of Polyrecombination 141

Nametkin, N. S., A. V. Topchiyev, and S. G. Durgaryan (USSR). The Synthesis of Organosilicon Polymers on a Complex Catalyst $(C_2H_5)_3Al \cdot TiCl_4$ 152

Kolesnikov, G. S., S. L. Davydova, and N. V. Klimentova (USSR). Germanium-Containing Polymers 156

Shostakovskiy, M. F., S. P. Kalinina, V. N. Kotrelev, D. A. Kochkin, N. I. Kurmetsova, L. V. Loyne, A. Y. Borisova, and V. V. Borisenko (USSR). Organotin Polymers 160

Koton, M. M., I. M. Kissleva, and F. S. Florinskiy (USSR). The Effect of Chemical Structure on the Polymerization Activity of the Unsaturated Organometallic Compounds 167

Vol'kenshtern, M. V. (USSR). Cooperative Processes in the Polycondensation of Biopolymers 202

Card 6/9

49

APPROVED FOR RELEASE: 04/03/2001 CIA-RDP86-00513R001756220001-7"

"APPROVED FOR RELEASE: 04/03/2001 CIA-RDP86-00513R001756220001-7

Tomescu, V.

TOMESCU, V.

TOMESCU, V. For a closer cooperation between technical institutes of higher education and metallurgic enterprises and enterprises for machinery construction. p. 67.

Vol. 8, no. 6, June 1956
METALURGIA SI CONSTRUCTIA DE MASINI.
TECHNOLOGY
RUMANIA

So: East European Accession, Vol. 6, No. 5, May 1957

APPROVED FOR RELEASE: 04/03/2001 CIA-RDP86-00513R001756220001-7"

"APPROVED FOR RELEASE: 04/03/2001 CIA-RDP86-00513R001756220001-7

MATEI, Gh., ing.; SANDU, S.; BERA, G.; CEBOTARENCU, M. POPESCU, N., ing.; TOMESCU, Petre

Reviewing the achievements. Constr Buc 16 no.742:1 28 March 1964.

1. Postul de corespondenti voluntari de la craiova (for Matei).
2. Subredactia voluntara de la Ploiesti (for Cebotarencu).
3. Fabrica de geamuri-Scaeni (for Tomescu).

APPROVED FOR RELEASE: 04/03/2001 CIA-RDP86-00513R001756220001-7"

"APPROVED FOR RELEASE: 04/03/2001 CIA-RDP86-00513R001756220001-7

~~RUMM~~. TOMESCU, V. C.

SĂVULESCU (T.) & TOMESCU (V. C.). **Recherches sur la bactériose de l'Herbe de Soudan.** [Researches on bacteriosis of Sudan Grass.]—*Bull. Sect. sci. Acad. roum.*, xxii, 9, pp. 404–407, 1940. [Received April, 1948.]

This study completes the description of the bacteriosis of Sudan grass (*Sorghum exiguum*) [? *S. sudanense*] in Rumania caused by *Pseudomonas holci* [*R.A.M.*, v, p. 741; xi, p. 364; xxii, p. 18] and of the characters of the organism.

APPROVED FOR RELEASE: 04/03/2001 CIA-RDP86-00513R001756220001-7"

"APPROVED FOR RELEASE: 04/03/2001 CIA-RDP86-00513R001756220001-7

TOMESCU, V.; SUHACI, I.; URSACHE, R.

Immunobiological relations of various strains of variola virus isolated from birds. Stud. cercet. inframicrobiol., Bucur. 6 no.1-2: 111-118 Jan-June 55.

(SMALLPOX, virus
avian variola virus,; strains isolated from birds & fowls)
(FOWLS, DOMESTIC
chickens & turkeys, isolation of variola virus from)
(BIRDS
doves & pigeons, isolation of variola virus from)

APPROVED FOR RELEASE: 04/03/2001 CIA-RDP86-00513R001756220001-7"

"APPROVED FOR RELEASE: 04/03/2001 CIA-RDP86-00513R001756220001-7

SUHACI, I.,; URSACHE, R.,; SURDAN, C.,; TOMESCU, V.

Use of variola viruses cultured on allantoid membrane as antigenic material for preparation of avian variola vaccine. Stud. cercet. inframicrobiol.,Bucur. 6 no.1-2:119-130 Jan-June 55.

(SMALLPOX, virus
avian variola virus, use in prep. of anti-variola vacc. for birds & fowls)
(VACCINES AND VACCINATION
avian variola vaccine, prep.)

APPROVED FOR RELEASE: 04/03/2001 CIA-RDP86-00513R001756220001-7"

"APPROVED FOR RELEASE: 04/03/2001 CIA-RDP86-00513R001756220001-7

RUMANIA / Diseases of Farm Animals. Diseases Caused by Viruses and Rickettsiae. R-2

Abs Jour : Ref Zhur - Biol., No. 17, 1958, No. 78939

Author : Mihaita, S; Popa, M; Tomescu, V; Pascu, L; Gheorghiu, I; Oncioiu, P; Isopescu, I; Marinescu, I.

Inst : Not given

Title : A Crystal-Violet Vaccination Against Swine Fever, Prepared from Virulent Blood (Experimental Study and Preliminary Results Obtained in Practice). Conclusions.

Orig Pub : Anuarul Inst. seruri si vacc. Pasteur Bucuresti, 1956, 1, 39-64.

Abstract : No abstract given.

Card 1/1

APPROVED FOR RELEASE: 04/03/2001 CIA-RDP86-00513R001756220001-7"

"APPROVED FOR RELEASE: 04/03/2001 CIA-RDP86-00513R001756220001-7

Category :

Subcategory :

Abs. Jour. : RZBiol., No. 4, 1959, No. 16812

Author :

Institution. :

Title :

Orig. Pub. :

Abstract : biological tests on foals in only 3.5 percent of the cases, whereas the tests on foals where acute cases existed showed 100 percent positive. Among the horses which produced anti-erysipelas serum, were used for at least one year and had a latent form of infectious anemia, the disease assumed an acute form in 36.8 percent of the animals and it became possible to establish

Card: 2/3

APPROVED FOR RELEASE: 04/03/2001 CIA-RDP86-00513R001756220001-7"

"APPROVED FOR RELEASE: 04/03/2001 CIA-RDP86-00513R001756220001-7

Author :
Organization :

Acc. Nr. : RZBiol., No. 4, 1959, No. 16812

Library :
Institute, :
Title :

Contr. Nr. :

Abstract : this quite readily by clinical procedure, through thermometry and occasionally by means of hematological investigation as well. In horses which were used to produce other sera, the

Card: 3/5

APPROVED FOR RELEASE: 04/03/2001 CIA-RDP86-00513R001756220001-7"

"APPROVED FOR RELEASE: 04/03/2001 CIA-RDP86-00513R001756220001-7

Country : Romania
Category : Diseases of Farm Animals. Diseases Caused by Viruses and Rickettsiae. R-2
Abs. Jour : RZBiol., No. 4, 1959, No. 16812

Author :
Institut. :
Title :

Orig Pub. :

Abstract : disease developed into a severe form in approximately 3.5-5 percent of the cases. . The IA virus of decreased virulence which has been obtained from the blood of virus carrying animals and which is introduced to susceptible colts in a small amount, may be preserved in their organism for not less than one year without producing any disease symptoms. If erysipelas antigen is introduced repeatedly after an interval of 3-4½ months, it may pro-

Card: 4/5

APPROVED FOR RELEASE: 04/03/2001 CIA-RDP86-00513R001756220001-7"

"APPROVED FOR RELEASE: 04/03/2001 CIA-RDP86-00513R001756220001-7

Country : Rumania
Category : Diseases of Farm Animals. Diseases Caused by Viruses and Rickettsiae. R-2
Jour. Jour : RZBiol., No. 4, 1959, No. 16812

Author :
Institut. :
Title :

Orig Pub. :

Abstract : duce a severe form of the disease as a result of the organism's weakening which is caused by the antigen -- I. Ya. Panchenko

Card: 5/5

APPROVED FOR RELEASE: 04/03/2001 CIA-RDP86-00513R001756220001-7"

"APPROVED FOR RELEASE: 04/03/2001 CIA-RDP86-00513R001756220001-7

SUHACI, I.; URSACHE, R.; TOMESCU, V.

Notes on culture of Aujeszky's virus in chick embryo. Stud. cercet. inframicrobiol., Bucur. 7 no.1-2:111-117 Jan-June 56.

(VIRUSES
Aujeszky dis. virus, culture in chick embryo.)

APPROVED FOR RELEASE: 04/03/2001 CIA-RDP86-00513R001756220001-7"

"APPROVED FOR RELEASE: 04/03/2001 CIA-RDP86-00513R001756220001-7

Rumania/Diseases of Farm Animals. Diseases caused by Viruses K-1 and Rickettsiae

Abs Jour : Ref Zhur-Biol., No 1, 1958. 2724

Author : Vikheitse V., Popa N., Romesku V., Josku I., Gucheyu P., Icopesku P., Marinescku I.

Inst : Academy of the People's Republic of Rumania

Title : Anti-cholera-Swine Vaccine Prepared from Blood Containing the Virus and Crystal-Violet Inactivated. Experimental Investigation and Preliminary Practical Results

Orig Pub : Acad. RPR, 1956, 7, No 1-2, 119-130

Abstract : The examination of vaccine which has been prepared by the Kulesko method, has shown that it establishes stable immunity in pigs in the course of 11 months and that it does not have any harmful effect on the animals. The vaccine may be stored for 9 to 10 months without changing its

Card 1/2

APPROVED FOR RELEASE: 04/03/2001 CIA-RDP86-00513R001756220001-7

"APPROVED FOR RELEASE: 04/03/2001 CIA-RDP86-00513R001756220001-7

TOMESCU, V.

SUCHACI, Ioan; URSACHE, Romeo; TOMESCU, V.

Studies of the possibility of anti-variola vaccination of pigeons with turkey-pox virus. Stud. cercet. inframicrobiol., Bucur. 7 no.3-4:403-411 July-Dec 56.

1. Comunicare prezentata in sedinta Institutului de inframicrobiologie al Academiei R.P.R.

(VIRUS DISEASES, immunology
immun. of pigeons against fowl pox by vacc. with turkey-pox virus)

(BIRDS, diseases
pigeon-pox, prev. by vacc. of pigeons with turkey-pox virus vaccine)

APPROVED FOR RELEASE: 04/03/2001 CIA-RDP86-00513R001756220001-7"

"APPROVED FOR RELEASE: 04/03/2001 CIA-RDP86-00513R001756220001-7

TOMESCU,V.; GHEORGHIU,I.; ALBU,T.; MIHAITA,S.; PASCU,L.; POPA,M.

The role of eliminators of lapinized swine pest virus in contact immunity. Stud.cercet. inframicrobiol. Bucur. 11 nc.1:141-147 '60.

(VIRUS DISEASES, transmission)
(SWINE, diseases)

APPROVED FOR RELEASE: 04/03/2001 CIA-RDP86-00513R001756220001-7"

"APPROVED FOR RELEASE: 04/03/2001 CIA-RDP86-00513R001756220001-7

SUHACI, I.; URSACHE, R.; TOMESCU, V.

Studies on changes in Aujeszky's virus after a repeated passage on chick embryo. Stud. cercet. inframicrobiol., Bucur. 11 no.2: 263-272 '60.
(VIRUSES culture)

APPROVED FOR RELEASE: 04/03/2001 CIA-RDP86-00513R001756220001-7"

"APPROVED FOR RELEASE: 04/03/2001 CIA-RDP86-00513R001756220001-7

[illegible], V. ✓
Surname (in caps); Given Names

Country: Rumania

Academic Degrees: [not given]

Affiliation: [not given]

Source: Bucharest, Problema Zootehnice si Veterinare, No 7, Jul 61, pp 74.

Data: "Inter-Balkan Veterinary Conference at Sofia."

APPROVED FOR RELEASE: 04/03/2001 CIA-RDP86-00513R001756220001-7"

"APPROVED FOR RELEASE: 04/03/2001 CIA-RDP86-00513R001756220001-7

TOMESCU, V.

Results of the research made by the Institute of Inframicrobiology in the field of animal viruses. Studii cerc inframicrobiol Special issue-supplement to 12:83-93 '61.

1. Membru al Comitetului de redactie, "Studii si cercetari de inframicrobiologie".

(VETERINARY MEDICINE) (VIRUS DISEASES)

APPROVED FOR RELEASE: 04/03/2001 CIA-RDP86-00513R001756220001-7"

"APPROVED FOR RELEASE: 04/03/2001 CIA-RDP86-00513R001756220001-7

SURDAN, C.; TOMESCU, V.; DOHOTARU, V.; POPA, M.; IFTIMOVICI, R.; MOLDOVANU, G.; URACHE, O.; LUPASCU, L., asistent tehnic

On the presence and persistence of aphthous virus in the body of experimentally infected cattle. Studii cerc inframicrobiol Special issue-supplement to 12:399-428 '61.

1. Institutul de inframicrobiologie al Academiei R.P.R., Laboratorul de viroze animale si Institutul de seruri si vacinuri Pasteur, Bucuresti. 2. Membru al Comitetului de redactie, "Studii si cercetari de inframicrobiologie" (for Tomescu).

(FOOT-AND-MOUTH DISEASE) (VIRUSES)

APPROVED FOR RELEASE: 04/03/2001 CIA-RDP86-00513R001756220001-7"

"APPROVED FOR RELEASE: 04/03/2001 CIA-RDP86-00513R001756220001-7

RUMANIA

TOMESCU, V., Lect, Dr, BALASIU, P., Dr, MUNTEANU, Ruxandra, Dr, BARBONTA, P., Veterinarian, and MANOLESCU, Alexandrina, of the Faculty of Veterinary Medicine (Facultatea de Medicina Veterinara) Timisoara.

"On Diseases Transmissible Through Water and Notes on the Sanitation of Water Sources Intended for Animals in Several Units in Banat and Crisana Regiunes."

Bucharest, Revista de Zootehnie si Medicina Veterinara, Vol 16, No 4, Apr 66, pp 38-46.

Abstract: After stressing the importance of potable water sources to prevent the transmission of an number of diseases and reviewing the Rumanian standards for water purification, the authors briefly describe the types of installations used for water purification in the state farms of Banat and Crisana Regiune. Some specific installations, either operating or in the planning stage, are also described.

Includes 3 figures and 12 references, of which 3 German, one French and 8 Rumanian.

APPROVED FOR RELEASE: 04/03/2001 CIA-RDP86-00513R001756220001-7"

"APPROVED FOR RELEASE: 04/03/2001 CIA-RDP86-00513R001756220001-7

TOMESCU, V.; PASCU, L.; SURDAN, C.; POPA, M.; DOHOTARU, V.; ELEFTERESCU, A.; GHEORGHIU, I.; EUSTAFIEVICI, O.; MOLDOVAN, Gh.; CONSTANTINESCU, Cr.; DAN, F.; IFTIMOVICI, R.

Study of immunity after vaccination against foot-and-mouth disease. Stud. cercet. inframicrobiol. 12:385-397 Supplement '61.
(FOOT-AND-MOUTH DISEASE immunology)
(CATTLE diseases

APPROVED FOR RELEASE: 04/03/2001 CIA-RDP86-00513R001756220001-7"

"APPROVED FOR RELEASE: 04/03/2001 CIA-RDP86-00513R001756220001-7

SURDAN, C.; TOMESCU, V.; DOHOTARU, V.; POPA, M.; IFTIMOVICI, R.; MOLDOVANU, G.; URSACHE, O.

Study on the presence and persistance of aphthous fever virus in the bodies of experimentally infected cattle. Stud. cercet. inframicrobiol. 12:399-428 Supplement '61.
(FOOT-AND-MOUTH DISEASE virology)
(CATTLE diseases)

APPROVED FOR RELEASE: 04/03/2001 CIA-RDP86-00513R001756220001-7"

"APPROVED FOR RELEASE: 04/03/2001 CIA-RDP86-00513R001756220001-7

TOMESCU, V.; PASCU, L.; SURDAN, C.; POPA, M.; DOHOTARU, V.; ELEFTERESCU, A.; GHEORGHIU, I.; EUSTAFIEVICI, O.; MOLDOVAN, Gh.; CONSTANTINESCU, Cr.; DAN, F.; IFTIMOVICI, R.; ANASTASIU, I., asistent tehnic; FLOREA, A., asistent tehnic

On the immunity following the antiaphthous vaccination. Studii cerc inframicrobiol Special issue-supplement to 12:385-397 '61.

1. Institutul de inframicrobiologie al Academiei R.P.R., Laboratorul de viroze animale si Institutul de seruri si vaccinuri Pasteur, Bucuresti. 2. Membru al Comitetului de redactie, "Studii si cercetari de inframicrobiologie" (for Tomescu).

(FOOT-AND-MOUTH DISEASE) (IMMUNITY)

APPROVED FOR RELEASE: 04/03/2001 CIA-RDP86-00513R001756220001-7"

"APPROVED FOR RELEASE: 04/03/2001 CIA-RDP86-00513R001756220001-7

TOMESCU, V.

Results of the investigations of the Institute of Inframicrobiology in the field of virus diseases of animals. Stud. cercet. inframicrobiol. 12:83-93 '61.
(VIRUS DISEASES veterinary)

APPROVED FOR RELEASE: 04/03/2001 CIA-RDP86-00513R001756220001-7"

"APPROVED FOR RELEASE: 04/03/2001 CIA-RDP86-00513R001756220001-7

TOMESCU, V.

2 new animal viral diseases beginning to appear in Europe: African swine pest and African equine plague. Stud. cercet. inframicrobiol. 12 no.3:395-397 '61.
(VIRUS DISEASES veterinary) (SWINE diseases)
(HORSES diseases)

APPROVED FOR RELEASE: 04/03/2001 CIA-RDP86-00513R001756220001-7"

"APPROVED FOR RELEASE: 04/03/2001 CIA-RDP86-00513R001756220001-7

DIMITRIU, C.C., prof.; BULIGESCU, L., dr.; ARESTEANU, L., dr.; SUCIU, Dan, dr.; TOMESCU, V., dr.; MARINESCU, M.dr.; ANDRONESCU, M., dr.; SOLOMON, Sela, dr.

The importance of early diagnosis of postviral chronic hepatitis. Med. inter., Bucur 13 no.5:673-678 My '61.

1. Lucrare effectuata in Clinica medicala a Spitalului "C.Davilla", I.M.F., Bucuresti.
(HEPATITIS, INFECTIOUS complications)
(LIVER CIRRHOSIS prev. & control) (HEPATITIS diagnosis)

APPROVED FOR RELEASE: 04/03/2001 CIA-RDP86-00513R001756220001-7"

"APPROVED FOR RELEASE: 04/03/2001 CIA-RDP86-00513R001756220001-7

TOMESZ, D.

Tasks in mechanization of our coal mining. p. 513

BANYASZATI LAPOK, Vol. 10, No. 10 Oct. 1955

(Magyar Banyaszati es Kohaszati Egyesulet) Budapest.

SOURCE: East European Accessions List Vol. 5, No. 1 September, 1956

APPROVED FOR RELEASE: 04/03/2001 CIA-RDP86-00513R001756220001-7"

"APPROVED FOR RELEASE: 04/03/2001 CIA-RDP86-00513R001756220001-7

KURUASHOVA, Valentina Anatol'yevna; TOMFEL'D, Leonid Pavlovich; GOROKHOV, P.N., inzh., retsenzent; KOSTYUKOVSKIY, M.A., inzh., red.; KALININ, V.K., inzh., red.; GROMOV, Yu.V., tekhn. red.

[Inspection and maintenance of the electrical machinery of electric rolling stock]Osmotr i tekushchii remont elektricheskikh mashin elektropodvizhnogo sostava. Moskva, Transzheldorizdat, 1962. 102 p. (MIRA 15:11)
(Electric railway motors--Maintenance and repair)

APPROVED FOR RELEASE: 04/03/2001 CIA-RDP86-00513R001756220001-7"

"APPROVED FOR RELEASE: 04/03/2001 CIA-RDP86-00513R001756220001-7

MEDEL', V.B., professor, doktor tekhnicheskikh nauk; TOMFEL'D, L.P.; AKSENOV, A.I.

A much needed book on electric locomotives ("The electric locomotive." V.A. Rakov, P.K. Ponomarenko. Reviewed by V.B. Medel', L.P. Tomfel'd, A.I. Aksenov). Zhel. dor. transp. 38 no.11:90-93 N '56. (MLRA 9:12)

1. Zaveduyushchiy kafedroy "Elektricheskaya tyaga" Moskovskogo instituta inzhenerov transporta (for Medel') 2. Nachal'nik elektrodepo Pererva Moskovsko-Kursko-Donbasskoy dorogi (for Tomfel'd) 3. Mashinist-instruktor elektrodepo Pererva Moskovsko-Kursko-Donbasskoy dorogi (for Aksenov).
(Electric locomotives) (Rakov, V.A.) (Ponomarenko, P.K.)

APPROVED FOR RELEASE: 04/03/2001 CIA-RDP86-00513R001756220001-7"

"APPROVED FOR RELEASE: 04/03/2001 CIA-RDP86-00513R001756220001-7

TOMFEL'D, L.P.; KURCHASHOVA, V.A.

A useful manual for electric locomotive engineers and their assistants ("Electrical systems of electric locomotives and equipment maintenance." V.K. Kalinin and others. Reviewed by L.P. Tomfel'd, V.A. Kurchashova). Zhel.dor.transp. 37 no.3:95-96 Mr '56. (MLRA 9:5)

1. Nachal'nik motorvagonnogo depo Pererva Moskovsko-Kursko-Donbasskoy dorogi (for Tomfel'd); 2. Starshiy inzhener depo Pererva (for Kurchashova)
(Electric locomotives) (Kalinin, V.K.) (Mironov, K.A.) (Vitevskiy, I.V.) (Nikiforov, B.D.) (Sesyunin, V.S.) (Sobolev, V.M.)

APPROVED FOR RELEASE: 04/03/2001 CIA-RDP86-00513R001756220001-7"

"APPROVED FOR RELEASE: 04/03/2001 CIA-RDP86-00513R001756220001-7

KURCHASHOVA, V.A., starshiy inzhener; TOMFEL'D, L.P.

Organizing the repair of electric rolling stock at the Pererva depot. Zhel. dor. transp. 38 no.9:24-28 S '56. (MLRA 9:10)

1. Nachal'nik elektrodepo Pererva Moskovsko-Kursko-Donbasskoy dorogi (for Tomfel'd).
(Electric locomotives--Repairs)

APPROVED FOR RELEASE: 04/03/2001 CIA-RDP86-00513R001756220001-7"

"APPROVED FOR RELEASE: 04/03/2001 CIA-RDP86-00513R001756220001-7

TOMFEL'D, L.P.; KURCHASHOVA, V.A.

Decisions of the June Plenum of the Central Committee of the CPSU are brought into reality. Elek.i tepl.tiaga no.7:4-6 Jl '60. (MIRA 13:8)

1. Nachal'nik motorvagonnogo depo Pererva (for Tomfel'd).
2. Nachal'nik proizvodstvenno-tekhnicheskogo depo Pererva (for Kurchashova).
(Railroads--Repair shops)

APPROVED FOR RELEASE: 04/03/2001 CIA-RDP86-00513R001756220001-7"

"APPROVED FOR RELEASE: 04/03/2001 CIA-RDP86-00513R001756220001-7

TOMFEL'D, Leonid Pavlovich; YAKOVLEV, D.V., inzh., red.; BOBROVA, Ye.N., tekhn.red.

[The work practice of communist labor brigades at an electric railroad terminal] Opyt raboty brigad kommunisticheskogo truda v elektrodepo. Moskva, Vses.izdatel'sko-poligr.ob"edinenie M-va putei soobshcheniia, 1960. 26 p. (MIRA 13:6)
(Moscow--Electric railroads) (Socialist competition)

APPROVED FOR RELEASE: 04/03/2001 CIA-RDP86-00513R001756220001-7"

"APPROVED FOR RELEASE: 04/03/2001 CIA-RDP86-00513R001756220001-7

APPROVED FOR RELEASE: 04/03/2001 CIA-RDP86-00513R001756220001-7"

"APPROVED FOR RELEASE: 04/03/2001 CIA-RDP86-00513R001756220001-7

30110
S/194/61/000/007/020/079
D201/D305

6.7800 (1482,3902,4002)

AUTHOR: Tomfel'd, Yu.

TITLE: Combined use of pulsed markers in interference protected multiple-call signals

PERIODICAL: Referativnyy zhurnal. Avtomatika i radioelektronika, no. 7, 1961, 51, abstract 7 V380 (V sb. Prom. telemekhanika, M., AN SSSR, 1960, 115-129)

TEXT: It is expedient to transmit by one signal the information about the condition of a whole group of 2-position objects using at the same time comparatively simple systems of coding and of decoding. In the multiple-call method of transmitting information, the condition of all M objects is transmitted by one signal. It is necessary to have for this 2 M signals, every one of which corresponds to one of the combinations of the states the group objects are in. In multiple-call transmission the use of pulsed markers is more advantageous than the use of a single pulsed marker. This is so because

Card 1/2

APPROVED FOR RELEASE: 04/03/2001 CIA-RDP86-00513R001756220001-7"

"APPROVED FOR RELEASE: 04/03/2001 CIA-RDP86-00513R001756220001-7

30110
S/194/61/000/007/020/079
D201/D305

Combined use of pulsed markers...

in using a large enough number of pulsed markers the number of pulses in one signal may be much smaller than the respective number of objects. The multiple call transmission may be made using systematic codes, with a method of selection very near the distributive. With multiple-call transmission the protection from interference may be obtained as in the method of "protective call-cancelling" or by error correction. For two-position objects signals consisting of single full combination elements should be used. For multiple-position objects, the incomplete combination elements are suitable. The circuit performing the multiple-call transmission of information about the state of four objects is given. The circuit permits calling little differing from distributive calling. 8 references.
[Abstracter's note: Complete translation]

Card 2/2

APPROVED FOR RELEASE: 04/03/2001 CIA-RDP86-00513R001756220001-7"

"APPROVED FOR RELEASE: 04/03/2001 CIA-RDP86-00513R001756220001-7

16,6800

S/044/62/000/002/093/092
C111/C333

AUTHOR: Tomfel'd, Yu.

TITLE: The combined use of impulse signs in screened circular signals

PERIODICAL: Referativnyy zhurnal, Matematika, no. 2, 1962, 70, abstract 2V392. (In sb. "Probl. telemekhaniki". M., AN SSSR, 1960, 115-129)

TEXT: The author considers telemechanic devices intended for transmitting the information on the state of a group of objects, where each object can be in several positions. A circular and a non-circular method can be used for the transmission. In the first case for M two-position objects one signal each is used for each state of the object; in the second case a special signal corresponds to each state of the system of objects so that the number of signals used for the transmission is not smaller than 2^M. For transmitting the information a combined use of impulse signs is to be applied, where a protection against signal distortion must be provided for. On the basis of the literature sources the author compares well-known methods for realizing a communication system with application of different coding methods,

Card 1/2

APPROVED FOR RELEASE: 04/03/2001 CIA-RDP86-00513R001756220001-7"

"APPROVED FOR RELEASE: 04/03/2001 CIA-RDP86-00513R001756220001-7

The combined use of impulse signs ... S/044/62/000/002/083/092
C111/C333

among them the correcting code. The principle attention is turned to the real realizability of the corresponding transmission methods.

[Abstracter's note: Complete translation.]

Card 2/2

APPROVED FOR RELEASE: 04/03/2001 CIA-RDP86-00513R001756220001-7"

"APPROVED FOR RELEASE: 04/03/2001 CIA-RDP86-00513R001756220001-7

Tomfeld, Yu. L.

PHASE I BOOK EXPLOITATION SOV/3781

Akademiya nauk SSSR. Institut avtomatiki i telemekhaniki

Promyshlennaya telemekhanika (Industrial Telemechanics) Moscow, 1960. 284 p. Errata slip inserted. 4,000 copies printed.

Resp. Ed.: M.A. Gavrilov; Ed. of Publishing House: Ye.N. Grigor'yev; Tech. Ed.: N.G. Shevchenko.

PURPOSE: This collection of articles is intended for scientific workers and engineers in the field of telemechanics.

COVERAGE: The book contains studies completed in 1957 by the workers of the Institut avtomatiki i telemekhaniki AN SSSR (Institute of Automation and Telemechanics, Academy of Sciences USSR). They include telemechanic equipment, particularly contactless systems and systems for distributed equipment, the design of telemechanic signal systems, problems of bridge minimizing in relay circuitry, and methods of synthesizing relay circuitry using contactless components. No personalities are mentioned. Most of the articles are accompanied by references.

Card 1/ 4

APPROVED FOR RELEASE: 04/03/2001 CIA-RDP86-00513R001756220001-7"

"APPROVED FOR RELEASE: 04/03/2001 CIA-RDP86-00513R001756220001-7

SOV/3781

Industrial Telemechanics

TABLE OF CONTENTS:

Foreword 3

PART I. GENERAL PROBLEMS OF TELEMECHANICS

Gavrilov, M.A. Development and Present State of Discrete Telemechanic Theory and Equipment 5

PART II. THEORY OF TELEMECHANIC SYSTEMS

Gavrilov, M.A. Design of Bridge Circuitry. 35

Rodin, V.N. Contactless Counter Circuits Combining Counting and Coincidence Functions 92

Ostianu, V.M. Evaluation of the Number of Self-Correcting Codes With Combined Use of Characteristic Pulse Features 109

Tomfel'd, Yu.L. Combined Use of Characteristic Pulse Features in Protected Circular Signals 115

Card 2/4

APPROVED FOR RELEASE: 04/03/2001 CIA-RDP86-00513R001756220001-7"

"APPROVED FOR RELEASE: 04/03/2001 CIA-RDP86-00513R001756220001-7

Kharlamov, V.M. Signal Systems Using Characteristic Pulse Frequency Features 130

Zhozhikashvili, V.A., and K.G. Mityushkin. Design of Full-Wave Pulse Distributor Using Hysteresis Components 146

Prangishvili, I.V. Operation of Pulse Components Using Ferromagnetic Materials With Rectangular Hysteresis Loop Under Resistive and Inductive Load Conditions 154

Parkhomenko, P.P. High-Capacity Machine for Relay Circuitry Analysis 172

PART III. TELEMECHANIC EQUIPMENT

Bilik, R.V., and V.N. Silayev. Complex Telemechanic System for Distributed Equipment 198

Babicheva, Ye.V. Telemechanic Equipment for the Control of Distributed Equipment Systems 218

APPROVED FOR RELEASE: 04/03/2001 CIA-RDP86-00513R001756220001-7"

"APPROVED FOR RELEASE: 04/03/2001 CIA-RDP86-00513R001756220001-7

Industrial Telemechanics SOV/3781

Prangishvili, I.V. New Components for Contactless Telemechanic Systems 236

Bilik, R.V. Remote Signal System Using Polarized Relays 260

Abdullayev, D.A. Remote Signaling in Telemechanic Systems With Distributed Control Points 277

AVAILABLE: Library of Congress (TJ 213.A325)

Card 4/4

KM/rem/jb
7-20-60

APPROVED FOR RELEASE: 04/03/2001 CIA-RDP86-00513R001756220001-7"

"APPROVED FOR RELEASE: 04/03/2001 CIA-RDP86-00513R001756220001-7

PARKHOMENKO, P. P. and TOMFELD, YU. L.

"Minimizing number of substantial connections between rows of flow table"

report submitted for the Intl. Symposium on Relay Systems and Finite Automata Theory (IFAC), Moscow, 24 Sep-2 Oct 1962.

APPROVED FOR RELEASE: 04/03/2001 CIA-RDP86-00513R001756220001-7"

"APPROVED FOR RELEASE: 04/03/2001 CIA-RDP86-00513R001756220001-7

ACCESSION NR: AT4031766 S/0000/63/000/000/0110/0127

AUTHOR: Tomfel'd, Yu. L.

TITLE: Method for ordering the states of intermediate elements in the synthesis of multi-cycle relay devices

SOURCE: AN SSSR. Strukturnaya teoriya releyny*kh ustroystv (Structural theory of relay devices). Moscow, Izd-vo AN SSSR, 1963, 110-127

TOPIC TAGS: control system, automatic control, race condition, feedback, relay, multi-cycle relay, intermediate element, element ordering

ABSTRACT: In this long article a method is discussed for ordering the states of the intermediate elements of a relay device, which provides the possibility of achieving a relay device without inadmissible race conditions on the part of the secondary elements. Relay devices are first considered, for the synthesis of which operating conditions are assigned in the form of the flow table, minimalized in terms of the number of lines as proposed by Huffman (D. Huffman. Synthesis of sequential switching circuits. "J. Franklin Inst.", v. 257. N. 3, 4, 1954). Synthesis problems are analyzed on the basis of this table and a very important and most frequently encountered particular problem of assigned relay device working conditions is considered; namely, the absence of cyclically or periodically interchangeable output states with constant input state. In the further exposition of this

Card 1/7

APPROVED FOR RELEASE: 04/03/2001 CIA-RDP86-00513R001756220001-7"

"APPROVED FOR RELEASE: 04/03/2001 CIA-RDP86-00513R001756220001-7

ACCESSION NR: AT4031766

problem the flow table is considered as the assignment of the secondary states and transitions between them, it being necessary to specify the secondary states during the synthesis process, with the possibility of introducing permissible changes into the prescribed conditions. The discussion follows in general terms the exposition of Huffman in the work mentioned above, particularly with respect tothe author's explanation of k-sets and race conditions and their application to relay devices operating under "real" conditions. Permissible k-set operations during relay synthesis are analyzed (the author frequently introduces his own terminology and thus refers to Huffman's k-sets as "δ-subgraphs." The terms "δ-matrices," "δ-sets," "σ-graphs," derived from flow diagram analysis, are also introduced and explained). Various methods, as proposed by different authors, for arranging the states by lines are discussed. These methods, the author claims, are based on experience and intuition, or else make use of a redundant typical arrangement, constructed for those cases in which the transitions (flows) are present between all pairs of lines of the flow table and which does not yield critical race conditions for the intermediate elements. In the ordering of the states a unit n-dimensional cube (hypercube) is used (see Fig. 1a in the Enclosure). A binary n-place number is assigned to each apex of the cube. Each rib connects two adjacent numbers, differing only in one place. If the number of variables n is small (to 5 or 6), the hypercube may be conveniently represented in the form

Card 2/7

APPROVED FOR RELEASE: 04/03/2001 CIA-RDP86-00513R001756220001-7"

"APPROVED FOR RELEASE: 04/03/2001 CIA-RDP86-00513R001756220001-7

ACCESSION NR: AT4031766

of a graph (Fig. 1b). What is taken is the result of the imposition, one on the other, of the σ-graphs of all the columns of the flow table and the fusion of the apices, relating to the single lines, and the ribs, imposed one on the other. This result is called a state diagram or state graph. If the state graph is superimposed on the hypercube (introducing, if need be, new apices into the state graph and new lines into the flow table), then the binary numbers at the apices of the hypercube will characterize the states of the intermediate elements. By virtue of the nature of the hypercube, all transitions between the states of the relay device will be accompanied by a change in the state of only one intermediate element and, consequently, no element race conditions will be present. A new intermediate state may be introduced into the state graph. However, transition substitution in it is impossible without first checking the special conditions connected with the δ-subgraph isolation requirement. This fact limits the possibilities of this method of ordering secondary states — all the more since the originally assigned, untransformed δ-subgraphs are star-shaped in form with a steady state in the center and with a rib number equal to the number of unstable states. When imposed, they result in a graph with a large number of transitions between apices, which makes it difficult to align the graph with the hypercube. The method proposed in this article for ordering the states of two-position secondary relay elements, while it does not yield impermissible race conditions, does permit the acquisition

Card 3/7

APPROVED FOR RELEASE: 04/03/2001 CIA-RDP86-00513R001756220001-7"

"APPROVED FOR RELEASE: 04/03/2001 CIA-RDP86-00513R001756220001-7

ACCESSION NR: AT4031766

of permissible race conditions, if this should be required in order to increase operational speed or for the minimization of the circuits acting on the intermediate and final (performing) elements. Like the others, this method is based on the use of a hypercube; however, rather than combining the state diagram with the hypercube, there is a sequential "stretching" onto it of δ-subgraphs belonging to one σ-graph. In the transition from one σ-graph to the other, a new hypercube is taken and there is transferred to it the information with respect to the disposition of the apices of the σ-graphs, for which the state ordering operations have been carried out. Preserved on the former hypercube is the information as to how the apices of the corresponding σ-graph were arranged and what transitions exist between them. This permits the subsequent determination of the functions and, consequently, the structure of the circuits affecting the intermediate and acting elements. On the new hypercube the δ-subgraphs of the new σ-graph are sequentially ordered. The ordering of the δ-subgraph begins with locating the steady state or, if it does not coincide with the apex of the hypercube when the preceding σ-graphs have been "stretched," the place for it. The place for the steady state is selected so as to be adjacent to any of the apices, present on the hypercube, of the δ-subgraph being worked, and an arrow is used to indicate the direction of the flow along the rib of the cube from this apex to the apex selected

Card 4/7

APPROVED FOR RELEASE: 04/03/2001 CIA-RDP86-00513R001756220001-7"

"APPROVED FOR RELEASE: 04/03/2001 CIA-RDP86-00513R001756220001-7

ACCESSION NR: AT4031766

for the steady state. Then the transitions from the states not connected with the steady state to the steady state are established. Meanwhile, transition variants may be found by using both the apices relating to the given δ-subgraph as well as the free apices. In order to establish the flow (transition) from one apex of the processed δ-subgraph to another, as an intermediate apex there may be employed the intermediate apex given in one of the flow variants of an already worked δ-subgraph of the given σ-graph (if there are more than one of these variants). At this point also the disrupted δ-subgraph is restored, but no longer with the corresponding flow variant. After the flows between the apices, present on the hypercube, of the processed δ-subgraph have been determined, the sites for its apices which have not yet been arranged on the cube are found. These sites are selected either where intermediate states have been introduced or in the unoccupied apices of the cube located adjacent to the ordered apices of the δ-subgraph. Flow substitution and the introduction of new states, in this process, take place automatically and only as needed. At first, for the purpose of operation, a unit n-dimensional cube is taken of such order $n = n_{min}$ that $2^n \geqslant N$, where N is the number of lines of the base minimalized flow table.

If, later on, during the process of the work, it should be found to be impossible to order the necessary δ-subgraph apices or to establish the required flows, then the hypercube is expanded by adding one dimension; that is, there is a transition from an n-dimensional

Card 5/7

APPROVED FOR RELEASE: 04/03/2001 CIA-RDP86-00513R001756220001-7"

"APPROVED FOR RELEASE: 04/03/2001 CIA-RDP86-00513R001756220001-7

ACCESSION NR: AT4031766

to an (n + 1)-dimensional cube. This method is developed and illustrated on the basis of practical examples in the article. Orig. art. has: 8 figures and 14 tables.

ASSOCIATION: None

SUBMITTED: 14Nov63 DATE ACQ: 16Apr64 ENCL: 01

SUB CODE: IE, EC NO REF SOV: 000 OTHER: 003

Card 6/7

APPROVED FOR RELEASE: 04/03/2001 CIA-RDP86-00513R001756220001-7"

"APPROVED FOR RELEASE: 04/03/2001 CIA-RDP86-00513R001756220001-7

ACCESSION NR: AT4031766. ENCLOSURE: 01

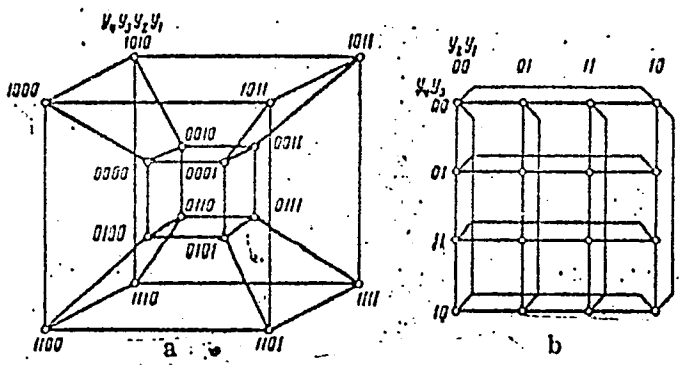

Fig. 1. Unit four-dimensional cube (a), and unit four-dimensional cube in the form of a graph (b).

Card 7/7

APPROVED FOR RELEASE: 04/03/2001 CIA-RDP86-00513R001756220001-7"

"APPROVED FOR RELEASE: 04/03/2001 CIA-RDP86-00513R001756220001-7

Kibernetika, Svodnyy tom, Abs. 3V127

TITLE: Minimization of the number of intrinsic associations between rows of a table of transitions

144

TOPIC TAGS: transition table, intrinsic association, data system synthesis,

APPROVED FOR RELEASE: 04/03/2001 CIA-RDP86-00513R001756220001-7"

"APPROVED FOR RELEASE: 04/03/2001 CIA-RDP86-00513R001756220001-7

[illegible] ratio of transistors. Selection of the summing variant (compression [illegible]

[illegible]

Card 2/3

APPROVED FOR RELEASE: 04/03/2001 CIA-RDP86-00513R001756220001-7"

"APPROVED FOR RELEASE: 04/03/2001 CIA-RDP86-00513R001756220001-7

ACCESSION NR: AP[illegible]

always [illegible] in the simplest [illegible]

SUB CODE: IE, DP ENCL: 00

Card 3/3

APPROVED FOR RELEASE: 04/03/2001 CIA-RDP86-00513R001756220001-7"

"APPROVED FOR RELEASE: 04/03/2001 CIA-RDP86-00513R001756220001-7

L 04983-67

ACC NR: AT6030873 SOURCE CODE: UR/0000/66/000/000/0269/0276

34

AUTHOR: Gorovoy, V. R.; Kucherov, V. M.; Parkhomenko, P. P.; Tomfel'd, Yu. L. B+1

ORG: none

TITLE: A logic machine for automatic synthesis of (1, k)-terminal switching networks

SOURCE: Moscow. Institut avtomatiki i telemekhaniki. Abstraktnaya i strukturnaya teoriya releynykh ustroystv (Abstract and structural theory of relay devices). Moscow, Izd-vo Nauka, 1966, 269-276

TOPIC TAGS: switching theory, automatic machine, automaton, finite automation, automatic synthesis, machine synthesis

ABSTRACT: The authors describe a special-purpose machine ("Parus-1") intended for automatic synthesis of (1, k)-terminal switching networks by combinational logic. The automaton developed at the Institute of Automation and Telemechanics is capable of synthesizing (1, 4)-terminal networks using 6 variables, (1, 8)-terminal networks with 5 variables, and (1, 12)-terminal networks with 4 or fewer variables. The synthesized network may contain a maximum of 14 nodes with at most 10 switching elements connected between any two nodes. Input data (logical requirements) in the form of a truth table are introduced through 16 groups of 3-position switches (16 switches per group). The three positions correspond to the D, 1, and don't-care

Card 1/2

APPROVED FOR RELEASE: 04/03/2001 CIA-RDP86-00513R001756220001-7"

"APPROVED FOR RELEASE: 04/03/2001 CIA-RDP86-00513R001756220001-7

L 04983-67

ACC NR: AT6030873

outputs of the synthesized network. Results are displayed on a board containing signal lights each of which represents one contact between two nodes. It was established that of the synthesized networks 60% contained the same number of contacts as the reference structures, 3% had fewer contacts, and 37% had more contacts. The number of redundant contacts usually did not exceed one. Orig. art. has: 2 tables. [BD]

SUB CODE: 09/ SUBM DATE: 06Jun66/ ORIG REF: 003/ OTH REF: 003/

Card 2/2

APPROVED FOR RELEASE: 04/03/2001 CIA-RDP86-00513R001756220001-7"

"APPROVED FOR RELEASE: 04/03/2001 CIA-RDP86-00513R001756220001-7

RUMANIA 616.921.5-085.371

CAZACU, E., BUSUIOC, Carmen, STOICESCU, Atena, TOMI, E., SCHARF, I., of the Medical-Pharmaceutical Institute (Institutul de Medicina si Farmacie), Bucharest

"Contributions to the Study of the Efficiency of Anti-influenza Vaccinations with Live Vaccine."

Bucharest, Studii si Cercetari de Inframicrobiologie, Vol 17, No 5, 66, pp 389-394

Abstract: The authors analyze the serologic results of a Soviet bivalent (A_2 + B) live influenza vaccine. The vaccine was administered by intranasal instillation in two doses to 142 children in a vocational schoo, and was also used in two factories in Bucharest in the first quarter of 1965. It is stressed that the antibody level at the time of vaccination must be taken into consideration in the evaluation.

Includes 6 tables and 10 references, of which 5 Rumanian, 2 Russian and 3 Western. -- Manuscript submitted 6 February 1966.

1/1

APPROVED FOR RELEASE: 04/03/2001 CIA-RDP86-00513R001756220001-7"

"APPROVED FOR RELEASE: 04/03/2001 CIA-RDP86-00513R001756220001-7

L 31861-66 EWP(j) RM

ACC NR: AP6021281 SOURCE CODE: RU/0003/65/016/001/0040/0040

28

AUTHOR: Popescu, R.--Popesku, R.; Tomi, P.

ORG: PETROCHIM Institute, Ploiesti (Institutul PETROCHIM)

TITLE: Analysis by gas-liquid distribution chromatography of the monochlorinated products of C sub 3 hydrocarbons

SOURCE: Revista de chimie, v. 16, no. 1, 1965, 40

TOPIC TAGS: chlorinated organic compound, hydrocarbon, chromatography, allyl halide

ABSTRACT: The authors used gas-liquid distribution chromatography with a stationary polar phase to obtain the separation of 1-chloropropene from isopropyl chloride and of n-propyl chloride from allyl chloride. The reproducibility of the method was satisfactory and an analysis required approximately 40 minutes. Orig. art. has: 1 figure and 1 table. [JPRS]

SUB CODE: 07 / SUBM DATE: none / OTH REF: 001 / SOV REF: 002

Card 1/1 JS

APPROVED FOR RELEASE: 04/03/2001 CIA-RDP86-00513R001756220001-7"

"APPROVED FOR RELEASE: 04/03/2001 CIA-RDP86-00513R001756220001-7

STRAWINSKI, Stefan (Torun); TOMIALOJC, Ludwik (Wroclaw)

Birds colored nontypically. Wszechswiat no.5:109-110 My'61.

APPROVED FOR RELEASE: 04/03/2001 CIA-RDP86-00513R001756220001-7"

"APPROVED FOR RELEASE: 04/03/2001 CIA-RDP86-00513R001756220001-7

Tomic, Antonija

YUGO 3

Ranzites, I. Miroslav Karšulin, Antonija Tomić, and
Acta I. [illegible]
[illegible] Bull. intern. acad. yougoslave sci. et beaux-
arts, IX Sc. [illegible] Classe sci. math., phys. et tech., Livre 1,
H. 9 [illegible] Sc. C.r. 46, 9-31 g. N. P.

BL

APPROVED FOR RELEASE: 04/03/2001 CIA-RDP86-00513R001756220001-7"

"APPROVED FOR RELEASE: 04/03/2001 CIA-RDP86-00513R001756220001-7

SIKIC, Dragutin; TOMIC, Artur

New view of the tectonics of the Labin basin. Geol vjes Hrv 14: 35-40 '60 (publ.'61).

1. Zavod za geologiju i paleontologiju Tehnoloskog fakulteta Sveucilista u Zagrebu, Kacieceva 26; Istarski uljenokopi Rasa.

APPROVED FOR RELEASE: 04/03/2001 CIA-RDP86-00513R001756220001-7"

"APPROVED FOR RELEASE: 04/03/2001 CIA-RDP86-00513R001756220001-7

TOMIC, Bogdan, ing.

Pipes from non-ferrous metals. Tehnika Jug 17 no.3:505-508 '62.

APPROVED FOR RELEASE: 04/03/2001 CIA-RDP86-00513R001756220001-7"

"APPROVED FOR RELEASE: 04/03/2001 CIA-RDP86-00513R001756220001-7

TOMIC, Bogdan, inz. (Beograd)

Technical protection of labor. Tesla no.11/12:27-28 Jl-Ag '55.

APPROVED FOR RELEASE: 04/03/2001 CIA-RDP86-00513R001756220001-7"

"APPROVED FOR RELEASE: 04/03/2001 CIA-RDP86-00513R001756220001-7

TOMIC, Bogdan, ing.

Wire drawing. Tehnika Jug 16 no.10:1805-1803 O '61.

APPROVED FOR RELEASE: 04/03/2001 CIA-RDP86-00513R001756220001-7"

"APPROVED FOR RELEASE: 04/03/2001 CIA-RDP86-00513R001756220001-7

TOMIC, Bogdan, inz.

Industrial management. Production technique and production processes. Tehnika Jug 17 no.5:Supplr Masinstvo 11 no.5:912-914 My '62.

APPROVED FOR RELEASE: 04/03/2001 CIA-RDP86-00513R001756220001-7"

"APPROVED FOR RELEASE: 04/03/2001 CIA-RDP86-00513R001756220001-7

TOMIC, Bogdan, inz.

Industrial dusts; dangers and prevention. Tehnika Jug 17 no.11:Suppl.: Masinstvo 11 no.11:2128d-2128f N '62.

APPROVED FOR RELEASE: 04/03/2001 CIA-RDP86-00513R001756220001-7"

"APPROVED FOR RELEASE: 04/03/2001 CIA-RDP86-00513R001756220001-7

TOMIC, Bogdan, ing.

Manufacture of pipes with artificial materials. Tehnika Jug 17 no.1: 84-85 Ja '62.

(Pipe)

APPROVED FOR RELEASE: 04/03/2001 CIA-RDP86-00513R001756220001-7"

"APPROVED FOR RELEASE: 04/03/2001 CIA-RDP86-00513R001756220001-7

TOMIC, Bogdan, ing.

Injection of fuel, respectively of mixture of fuel and air into the cylinders of Otto and Diesel motors. Tehnika Jug 17 no.1:86-89 Ja '62.

(Diesel motors)

APPROVED FOR RELEASE: 04/03/2001 CIA-RDP86-00513R001756220001-7"

"APPROVED FOR RELEASE: 04/03/2001 CIA-RDP86-00513R001756220001-7

TOMIC, Bogdan, inz.

Care of materials and safety of workers in an industrial enterprise. Tehnika Jug 17 no.7:Suppl.: Masinstvo 11 no.7:1327-1329 Jl '62.

APPROVED FOR RELEASE: 04/03/2001 CIA-RDP86-00513R001756220001-7"

"APPROVED FOR RELEASE: 04/03/2001 CIA-RDP86-00513R001756220001-7

TOMIC, Bogdan, inz.

Metalworking by electrolysis. Tehnika Jug 18 no.11:Suppl.:Masinstvo 12 no.11:2075-2076 N '63.

APPROVED FOR RELEASE: 04/03/2001 CIA-RDP86-00513R001756220001-7"

"APPROVED FOR RELEASE: 04/03/2001 CIA-RDP86-00513R001756220001-7

TOMIC, Bogdan, inz.

Factors influencing rationality in industrial production. Tehnika Jug 18 no.9:Suppl.:Masinstvo 12 no.9:1696-1698 S '63.

APPROVED FOR RELEASE: 04/03/2001 CIA-RDP86-00513R001756220001-7"

"APPROVED FOR RELEASE: 04/03/2001 CIA-RDP86-00513R001756220001-7

TOMIC, Bogdan, inz.

Cast iron with spheroidal graphite, and its fitness for boiling and application in machine building. Tehnika Jug 18 no.10: Supplement: Masinstvo 12 no.10:1888-1891 O'63.

APPROVED FOR RELEASE: 04/03/2001 CIA-RDP86-00513R001756220001-7"

"APPROVED FOR RELEASE: 04/03/2001 CIA-RDP86-00513R001756220001-7

TOMIC, Bogdan, inz.

Metal treatment on the basis of explosions. Tehnika Jug 18 no.6: Suppl.:Masinstvo 12 no.6:1094-1096 Je '63.

APPROVED FOR RELEASE: 04/03/2001 CIA-RDP86-00513R001756220001-7"

"APPROVED FOR RELEASE: 04/03/2001 CIA-RDP86-00513R001756220001-7

TOMIC, Bogdan, ing.

Construction of iron and steel pipes. (To be contd.) Tehnika Jug 16 no.11:1985-1988 '61.

APPROVED FOR RELEASE: 04/03/2001 CIA-RDP86-00513R001756220001-7"

"APPROVED FOR RELEASE: 04/03/2001 CIA-RDP86-00513R001756220001-7

TOMIC, Bogdan, ing.

Production of pipes from artificial materials. Tehnika Jug 16 no.12: 2182-2184 '61.

APPROVED FOR RELEASE: 04/03/2001 CIA-RDP86-00513R001756220001-7"

"APPROVED FOR RELEASE: 04/03/2001 CIA-RDP86-00513R001756220001-7

TOMIC, Bogdan, inz.

Information on technical progress. Tehnika Jug 17 no.9: Suppl. Rudarstvo metalurg 13 no.9:1734-1735 S '62.

APPROVED FOR RELEASE: 04/03/2001 CIA-RDP86-00513R001756220001-7"

"APPROVED FOR RELEASE: 04/03/2001 CIA-RDP86-00513R001756220001-7

TOMIC, Bogdan, inz.

Application of ultrasound in industries. Tehnika Jug 19 no.5:Suppl:Masinstvo 13 no.5:893-896 My '64.

APPROVED FOR RELEASE: 04/03/2001 CIA-RDP86-00513R001756220001-7"

"APPROVED FOR RELEASE: 04/03/2001 CIA-RDP86-00513R001756220001-7

TOMIC, Bogdan, inz.

Internal transport and warehousing in an industrial enterprise. Tehnika Jug 17 no.7:Suppl.: Masinstvo 11 no.7:1326-1327 Jl '62.

APPROVED FOR RELEASE: 04/03/2001 CIA-RDP86-00513R001756220001-7"

"APPROVED FOR RELEASE: 04/03/2001 CIA-RDP86-00513R001756220001-7

TOMIC, B.

The control of the method of work in enterprises. p. 51.
(GLASNIK, No. 25/26, 1956

SO: Monthly List of East European Accessions (EEAL) LC Vol. 6, No. 12, Dec. 1957
Uncl.

APPROVED FOR RELEASE: 04/03/2001 CIA-RDP86-00513R001756220001-7"

"APPROVED FOR RELEASE: 04/03/2001 CIA-RDP86-00513R001756220001-7

TOMIC, B.

Integrals connected to the polynomials $A_\nu^n(\alpha)$ and to the rational functions $\phi_n(\alpha\gamma)$. P. 97. (ZAGREB, Vol. 9, No. 2, 1954.)

SO: Monthly List of East European Accessions. (EEAI, LC, Vol. 4, No. 6 June 1955, Uncl.

APPROVED FOR RELEASE: 04/03/2001 CIA-RDP86-00513R001756220001-7"

"APPROVED FOR RELEASE: 04/03/2001 CIA-RDP86-00513R001756220001-7

TOMIC, S.

A class of polynomials and the integrals connected with them. p. 229.
GLASNIK MATEMATICKO-FIZICKI I ASTRONOMSKI, Zagreb, Vol. 9, no. 3/4, 1954.

SO: Monthly List of East European Accessions, (EEAL), LC, Vol. 4, no. 10, Oct. 1955, Uncl.

APPROVED FOR RELEASE: 04/03/2001 CIA-RDP86-00513R001756220001-7"

"APPROVED FOR RELEASE: 04/03/2001 CIA-RDP86-00513R001756220001-7

ROTOVIC, A.; PETROVIC, D.; NEDVINEK, B.; MILICEVIC, L.; TOMIC, B.

The first results of the research on biological effects of the ematatorium at Niska Banja. Srpski arh. celok. lek. 83 no.4: 444-451 Apr 55.

1. Institut za medicinsku hidrologiju i klimatologiju Medicinskog fakulteta u Beogradu. Direktor: Milutin Neskovic. Institut za fizikalnu terapiju Medicinskog fakulteta u Beogradu. Upravnik: Aleksandar Rotovic.

(RADIOTHERAPY,
in ematorium Niska Banja, Yugosl., biol. eff. (Ser))
(BALNEOLOGY,
Niska Banja spa, biol. eff. of emanatorium (Ser))

APPROVED FOR RELEASE: 04/03/2001 CIA-RDP86-00513R001756220001-7"

"APPROVED FOR RELEASE: 04/03/2001 CIA-RDP86-00513R001756220001-7

ROTOVIC,A; MILICEVIC, L.; TOMIC, B.

The change in sedimentation rate of blood caused by baths in radioactive waters of Niska Banja.Med.pregl.Novi Sad 8 no.1: 25-30 1955.

1. Institut za medicinsku hidrologiju i klimatologiju Medichskog fakulteta, Beograd. Upravnik: prof. dr. Milutin Neskovic; Institut za fizikalmu terapiju Medicinskog fakulteta, Beograd. Upravnik: prof. dr Aleksandar Rotovoc.

(BALNEOLOGY,
Niska Banja, Yugosl. radioactive baths causing change in blood.sedimentation rate (Ser))
(BLOOD
sedimentation rate, changes caused by radioactive baths (Ser))

APPROVED FOR RELEASE: 04/03/2001 CIA-RDP86-00513R001756220001-7"

"APPROVED FOR RELEASE: 04/03/2001 CIA-RDP86-00513R001756220001-7

APPROVED FOR RELEASE: 04/03/2001 CIA-RDP86-00513R001756220001-7"

"APPROVED FOR RELEASE: 04/03/2001 CIA-RDP86-00513R001756220001-7

APPROVED FOR RELEASE: 04/03/2001 CIA-RDP86-00513R001756220001-7"

"APPROVED FOR RELEASE: 04/03/2001 CIA-RDP86-00513R001756220001-7

TOMIC, Bratislav, dots., dr; STEFANOVIC, Bozhidar, dots., dr; MANOJLOVIC-BOKONJIC, Olga, dr

Physical therapy of chronic sinusitis. Med. glas. 16 no.3:135-138 Mr '62.

1. Institut za fizikalnu meditsinu i rekhabilitatsiju Meditsinskog fakulteta u Beogradu (Upravnik: prof. dr A. Rotovic)

(SINUSITIS ther) (PHYSICAL THERAPY)

S

APPROVED FOR RELEASE: 04/03/2001 CIA-RDP86-00513R001756220001-7"

"APPROVED FOR RELEASE: 04/03/2001 CIA-RDP86-00513R001756220001-7

TOMIC, B.

Contribution to the dimensioning of axially stressed poles. p. 1.
(Izgradnja, Vol.11, No. 2, Feb. 1957, Beograd, Yugoslavia)

SO: Monthly List of East European Accessions (EEAL) Lc. Vol. 6, No. 8, Aug 1957. Uncl.

APPROVED FOR RELEASE: 04/03/2001 CIA-RDP86-00513R001756220001-7"

"APPROVED FOR RELEASE: 04/03/2001 CIA-RDP86-00513R001756220001-7

TOMIC, Bogdan, ing.

Furnaces, castings vessels and other equipment for foundries.
Tehnika Jug 17 no.4:711-712,716a Ap '62.

APPROVED FOR RELEASE: 04/03/2001 CIA-RDP86-00513R001756220001-7"

"APPROVED FOR RELEASE: 04/03/2001 CIA-RDP86-00513R001756220001-7

TOMIC, Bogdan, inz.

Quartz dust; its dangers, and ways of fighting against it. Pt. 2.
Tehnika Jug:Suppl.:Masinstvo 12 no.2:315 Fe '63.

APPROVED FOR RELEASE: 04/03/2001 CIA-RDP86-00513R001756220001-7"

"APPROVED FOR RELEASE: 04/03/2001 CIA-RDP86-00513R001756220001-7

CONIC, Zivojin, Dr.; TOMIC, Bratislav, Dr.

Late stages of poliomyelitis and their physical therapy. Med. glasn. 13 no.2:64-68 Feb 59.

1. Institut za fizikalnu medicinu i rehabilitaciju Medicinskog fakulteta u Beogradu (Upravnik: prof. dr A. Ratovic).

(POLIOMYELITIS, ther.
physical ther. (Ser))
(PHYSICAL THERAPY, in var. dis.
polio (Ser))

APPROVED FOR RELEASE: 04/03/2001 CIA-RDP86-00513R001756220001-7"

"APPROVED FOR RELEASE: 04/03/2001 CIA-RDP86-00513R001756220001-7

TOMIC, Bratislav, dr., Beograd.

The development of small children in rural areas as a social problem in Yugoslavia. Narodno zdrav., Beogr. 10 no.10:305-310 1954.

(BODY HEIGHT
Yugosl., in inf. in rural areas)
(INFANT NUTRITION
Yugosl.)

APPROVED FOR RELEASE: 04/03/2001 CIA-RDP86-00513R001756220001-7"

"APPROVED FOR RELEASE: 04/03/2001 CIA-RDP86-00513R001756220001-7

TOMIC, B.

Yugoslavia (430)

Some symbolic formulas for Bernoulli's polynomials.
p. 88. Glasnik Matematicko-Fizicki I A stronomski,
Seria 2, vol. 7, no. 2, 1952.

East European Accessions List, Library of Congress.
Vol. 2, nos. 1 & 2, Jan.-Feb., 1953, UNCLASSIFIED

APPROVED FOR RELEASE: 04/03/2001 CIA-RDP86-00513R001756220001-7"

"APPROVED FOR RELEASE: 04/03/2001 CIA-RDP86-00513R001756220001-7

TOMIC, B.S.

A new class of polynomials in the theory of special functions.
Bul sc Youg 8 no.3/4:77 Je-Ag'63.

1. Masinski fakultet, Beograd.

APPROVED FOR RELEASE: 04/03/2001 CIA-RDP86-00513R001756220001-7"