"APPROVED FOR RELEASE: 04/03/2001 CIA-RDP86-00513R001756630001-2

ANOKHIN, P.K., otv.red.; AGAFONOV, V.G., red.; ARSHAVSKIY, I.A., red.; GOLUBEVA, Ye.L., red.; KRYZHANOVSKIY, G.N., red.; PARIN, V.V., red.; SNYAKIN, P.G., red.; TROFIMOV, L.G., red.; SHUMILINA, A.I., red.

[Materials of the First Conference devoted to Problems in the Physiology, Morphology, Pharmacology, and Clinical Aspects of the Reticular Formation of the Brain] Materialy Nauchnoi konferentsii, posviashchennoi problemam fiziologii, morfologii, farmakologii i kliniki retikuliarnoi formatsii golovnogo mozga. Moskva, 1960. 134 p. (MIRA 14:3)

1. Nauchnaya konferentsiya, posvyashchennaya problemam fiziologii, morfologii, farmakologii i kliniki retikulyarnoy formatsii golovnogo mozga. 1960. 2. Laboratoriya obshchey fiziologii tsentral'noy nervnoy sistemy Instituta normal'noy i patologicheskoy fiziologii AMN SSSR, Moskva (for Agafonov, Shumilina). 3. Laboratoriya vozrastnoy fiziologii i patologii Instituta normal'noy i patologicheskoy fiziologii AMN SSSR, Moskva (for Arshavskiy). 4. Elektrofiziologicheskaya laboratoriya Instituta mozga AMN SSSR, Moskva (for Trofimov).

(BRAIN)

APPROVED FOR RELEASE: 04/03/2001 CIA-RDP86-00513R001756630001-2"

"APPROVED FOR RELEASE: 04/03/2001 CIA-RDP86-00513R001756630001-2

PHASE I BOOK EXPLOITATION SOV/4146

Tomsk. Nauchno-issledovatel'skiy institut vaktsin i syvorotok

Trudy, tom 11 (Transactions of the Tomsk Scientific Research Institute of Vaccines and Serums, Vol. 11) Tomsk, Izd-vo Tomskogo univ-ta, 1960. 327 p. 1,700 copies printed.

Editorial Board: B.G. Trukhmanov (Resp. Ed.) Director of the Tomsk Scientific Research Institute of Vaccines and Serums; S.P. Karpov (Deputy Ed.) Professor; Ye. I. Klaytman (Secretary); M.A. Mastenitsa; and V.M. Popov (Deceased); Tech. Ed.: A.T. Ocovskiy.

PURPOSE: This collection of articles is intended for biologists, physicians, and medical personnel.

COVERAGE: The collection contains 18 papers on problems of epidemiology and microbiology and 33 reports on the theory and practice of immunology. To avoid repetition of names of organizations in the table of contents the following affiliations will be abbreviated: Tomskiy nauchno-issledovatel'skiy institut vaktsin i syvorotok (Tomsk Scientific Research Institute of Vaccines and Serums) as "Tomsk Institute"; Tomskiy meditsinskiy institut as "Tomsk Medical Institute"; Kafedra mikrobiologii Tomskogo meditsinskogo institute (Department of Microbiology of the Tomsk Medical Institute) as "Tomsk Department of Microbiology."

21. Trukhmanov, B.G., and L.Ye. Tikhonova (Tomsk Institute). Active Anaphylaxis to Anatoxins Under Conditions of Changed Susceptibility of the Organism 141

22. Trukhmanov, B.G. (Tomsk Institute). Arthus' Phenomenon in the Case of Polysaccharides and Other Associated Complex Compounds 147

23. Trukhmanov, B.G. (Tomsk Institute). Meningococcus Toxin and Its Derivatives in Shvartzman's Phenomenon 154

24. Trukhmanov, B.G. (Tomsk Institute). Shvartzman's Phenomenon in the Case of Meningococcus Preparations Under Conditions of Changed Susceptibility of the Organism 161

25. Sukhova, N.G. Change in Complement Titer During Storage 166

26. Sukhova, N.G. (Tomsk Institute). On Repeated Immunization of Rabbits in the Preparation of Standard Flexner's Agglutinating Dysentery Serums 168

27. Vasil'yev, N.V. (Tomsk Institute; Tomsk Department of Microbiology). On the Antimicrobic Properties of Normal Serums of Man and Animals. Communication No. 4 172

28. Vasil'yev, N.V. (Tomsk Department of Microbiology). On the Temperature Stability of Normal Antibodies. Communication No. 1 177

29. Vasil'yev, N.V., and L.G. Trofimov (Tomsk Department of Microbiology; Department of Animal Physiology of the Tomsk University). On the Relationships Between Bioelectric Potentials of Internal Organs and Several Factors of Humoral Natural Immunity in Dogs 181

30. Alaverdyan, M.I., Kafedra mikrobiologii Stalinskogo instituta usovershenstvovaniya vrachey (Department of Microbiology of the Stalinsk Institute for Advanced Training of Physicians). The Permeability Factor and Hyaluronic Acid in Infection and Immunity Phenomena. Communication No. 1. Permeability Factor and Hyaluronic Acid in Experimental Infection 186

31. Alaverdyan, M.I. (Department of Microbiology of the Stalinsk Institute for Advanced Training of Physicians). The Permeability Factor and Hyaluronic Acid in Infection and Immunity Phenomena. Communication No. 2. Permeability Factor and Hyaluronic Acid in an Immunologic Test Model 198

32. Alaverdyan, M.I. (Department of Microbiology of the Stalinsk Institute for Advanced Training of Physicians). The Permeability Factor and Hyaluronic Acid in Infection and Immunity Phenomena. Communication No. 3. Permeability Factor and Hyaluronic Acid in an Immunologic Test Model for Cold-Blooded Animals 207

33. Tripolitova, A.A. (Tomsk Department of Microbiology; Tomsk Institute). On Sensitization of the Erythrocytes of Extracts From Listeria Cultures 213

34. Tripolitova, A.A. (Tomsk Department of Microbiology; Tomsk Institute). [Presented at the Combined Conference of the Tomsk Institute and the Institute of Epidemiology and Microbiology imeni Honorary Academician N.F. Gamaleya of the Academy of Medical Sciences USSR on May 29, 1958]. Indirect Hemagglutination Reaction in the Immunology of Listeriosis 218

APPROVED FOR RELEASE: 04/03/2001 CIA-RDP86-00513R001756630001-2"

"APPROVED FOR RELEASE: 04/03/2001 CIA-RDP86-00513R001756630001-2

TROFIMOV, L. G.; LYUBIMOV, N. N. (Moskva).

O Funktsional'nykh Vzaimootnosheniyakh Kory golovnogo mozga i retikulyarnoy formatsii pri vozdeystvii razlichnykh razdrazhiteley.

report submitted for the First Moscow Conference on Reticular Formation, Moscow, 22-26 March 1960.

APPROVED FOR RELEASE: 04/03/2001 CIA-RDP86-00513R001756630001-2"

"APPROVED FOR RELEASE: 04/03/2001 CIA-RDP86-00513R001756630001-2

VASIL'YEV, N.V.; TROFIMOV, L.G.

Correlations of bioelectrical potentials of internal organs and some factors of humoral natural immunity in dogs. Trudy TomNIIVS 11:181-185 '60. (MIRA 16:2)

1. Kafedra mikrobiologii Tomskogo meditsinskogo instituta i kafedra fiziologii zhivotnykh Tomskogo universiteta.
(ELECTROPHYSIOLOGY) (IMMUNOCHEMISTRY)

APPROVED FOR RELEASE: 04/03/2001 CIA-RDP86-00513R001756630001-2"

"APPROVED FOR RELEASE: 04/03/2001 CIA-RDP86-00513R001756630001-2

SARKISOV, S.A., red.; KUKUYEV, L.A., red.; POLYAKOV, G.I., red.; PREOBRAZHENSKAYA, N.S., red.; STANKEVICH, I.A., red.; TROFIMOV, L.G., red.; ARKHANGEL'SKIY, Yu.V., red.; LYUDKOVSKAYA, N.I., tekhn. red.

[Structure and function of the analysors of man in antogenesis] Struktura i funktsiia analizatorov cheloveka v ontogeneze; trudy. Pod obshchei red. S.A.Sarkisova. Moskva, Medgiz, 1961. 296 p. (MIRA 15:12)

1. Rasshirennaya nauchnaya konferentsiya instituta mozga, 1959. 2. Deystvitel'nyy chlen Akademii meditsinskikh nauk SSSR (for Sarkisov). 3. Institut mozga Akademii medtisinskikh nauk SSSR, Moskva (for Polyakov, Kukuyev).
(SENSE-ORGANS) (ONTOGENY)

APPROVED FOR RELEASE: 04/03/2001 CIA-RDP86-00513R001756630001-2"

"APPROVED FOR RELEASE: 04/03/2001 CIA-RDP86-00513R001756630001-2

SARKISOV, S.A., prof., red.; ADRIANOV, O.S., red.; KRYZHANOVSKIY, R.N., red.; PARIN, V.V., red.; POLYAKOV, G.I., red.; POPOVA, Ye.N., red.; PORTUGALOV, V.V., red.; RABINOVICH, M.Ya., red.; TROFIMOV, L.G[deceased], red.; ARKHANGEL'SKIY, Yu.V., red.

[Structure and function of the nervous system; transactions of a scientific conference, December 10 - 14, 1960] Struktura i funktsiia nervnoi sistemy; trudy nauchnoi konferentsii (10-14 dekabria 1960 g.) Moskva, Medgiz, 1962. 358 p. (MIRA 17:12)

1. Deystvitel'nyy chlen AMN SSSR (for Sarkisov).

APPROVED FOR RELEASE: 04/03/2001 CIA-RDP86-00513R001756630001-2"

"APPROVED FOR RELEASE: 04/03/2001 CIA-RDP86-00513R001756630001-2

TROFIMOV, L.G.; TARASOVA, V.I.; MENCHER, E.M.

Some connections between total electrical resistance of the dog liver and its function. Biofizika 9 no.4:530-532 '64. (MIRA 18:3)

1. Tomskiy gosudarstvennyy universitet imeni Kuybysheva.

APPROVED FOR RELEASE: 04/03/2001 CIA-RDP86-00513R001756630001-2"

"APPROVED FOR RELEASE: 04/03/2001 CIA-RDP86-00513R001756630001-2

TROFIMOV, L.V., referent.

New "Massey-Ferguson" tractor. Trakt. i sel'khozmash. no.3:45-46 Mr '58. (MIRA 11:5)

(Tractors)

APPROVED FOR RELEASE: 04/03/2001 CIA-RDP86-00513R001756630001-2"

"APPROVED FOR RELEASE: 04/03/2001 CIA-RDP86-00513R001756630001-2

TROFIMOV, L.V.

Items from foreign journals. Trakt. i sel'khozmash. no.5:47-48 My '58. (MIRA 11:6)

(Agricultural machinery)

APPROVED FOR RELEASE: 04/03/2001 CIA-RDP86-00513R001756630001-2"

"APPROVED FOR RELEASE: 04/03/2001 CIA-RDP86-00513R001756630001-2

TROFIMOV, L.V.

"Dexta" tractor. Trakt. i sel'khozmash. no. 6:47-48 Je '58.
(MIRA 11:7)

(United States--Tractors)

APPROVED FOR RELEASE: 04/03/2001 CIA-RDP86-00513R001756630001-2"

"APPROVED FOR RELEASE: 04/03/2001 CIA-RDP86-00513R001756630001-2

TROFIMOV, L.V.

New foreign tractors. Trakt. i sel'khozmash. no.10:45-46 O '58. (MIRA 11:10)

(Tractors)

APPROVED FOR RELEASE: 04/03/2001 CIA-RDP86-00513R001756630001-2"

"APPROVED FOR RELEASE: 04/03/2001 CIA-RDP86-00513R001756630001-2

TROFIMOV, L.V.

From the pages of Soviet and foreign periodicals. Trakt. i sel'khozmash. no.1:48 and 3 of cover Ja '59. (MIRA 12:1)
(Bibliography--Agricultural machinery)

APPROVED FOR RELEASE: 04/03/2001 CIA-RDP86-00513R001756630001-2"

"APPROVED FOR RELEASE: 04/03/2001 CIA-RDP86-00513R001756630001-2

TROFIMOV, L.V.

FIL712 tractor manufactured by "Deutz". Trakt.i sel'khozmash. no.10:46 O '59. (MIRA 13:2)
(Germany--Tractor industry)

APPROVED FOR RELEASE: 04/03/2001 CIA-RDP86-00513R001756630001-2"

"APPROVED FOR RELEASE: 04/03/2001 CIA-RDP86-00513R001756630001-2

TROFIMOV, L.V.

Items from Soviet journals. Trakt. i sel'khozmash. 30 no.6: 43-44 Je '60. (MIRA 13:11)
(Bibliography--Agricultural machinery)

APPROVED FOR RELEASE: 04/03/2001 CIA-RDP86-00513R001756630001-2"

"APPROVED FOR RELEASE: 04/03/2001 CIA-RDP86-00513R001756630001-2

TROFIMOV, L.V.

Heavy-duty agricultural tractor manufactured by John Deer. Trakt. i sel'khozmash. 30 no.9:45 S '60. (MIRA 13:9)
(United States--Tractors)

APPROVED FOR RELEASE: 04/03/2001 CIA-RDP86-00513R001756630001-2"

"APPROVED FOR RELEASE: 04/03/2001 CIA-RDP86-00513R001756630001-2

TROFIMOV, L. V.

Loveling device for the John Deer hillside combine. Trakt. i sel'khozmash. 30 no.8:44-45 Ag '60. (MIRA 13:8)
(Combines (Agricultural machinery))

APPROVED FOR RELEASE: 04/03/2001 CIA-RDP86-00513R001756630001-2"

"APPROVED FOR RELEASE: 04/03/2001 CIA-RDP86-00513R001756630001-2

LAGUNOV, V.; SHUREMOV, A.; TROFIMOV, M.; KOSTYKOV, I., slesar'; FERULEV, A.

In organizations of our society. Izobr.i rats. no.10: 16-17 O '59. (MIRA 13:2)

1. Predsedatel' Yakutskogo oblastnogo soveta Vsesoyuznogo obshchestva izobretateley i ratsionalizatorov (for Lagunov). 2. Starshiy inzhener byuro tekhnicheskoy informatsii i izobretatel'stva, L'vov (for Shuremov). 3. Predsedatel' soveta Vsesoyuznogo obshchestva izobretateley i ratsionalizatorov Vel'giyskoy bumazhnoy fabriki, g.Borovichi (for Trofimov). 4. Zavod "Soyuz," predsedatel' soveta Vsesoyuznogo obshchestva izobretateley i ratsionalizatorov, Leningrad (for Kostykov). 5. Predsedatel' zavodskoy organizatsii Vsesoyuznogo obshchestva izobretateley i ratsionalizatorov Lys'venskogo metallurgicheskogo zavoda, g.Lys'va, Permskoy oblasti (for Ferulev).
(Efficiency, Industrial)

APPROVED FOR RELEASE: 04/03/2001 CIA-RDP86-00513R001756630001-2"

"APPROVED FOR RELEASE: 04/03/2001 CIA-RDP86-00513R001756630001-2

Z/056/62/019/004/001/005
1037/1237

AUTHOR: Trofimov, M.

TITLE: Transmission of gamma rays through welded seams in spherical electrical dehydrators

PERIODICAL: Přehled technické a hospodářské literatury, Hutnictvi a strojirenstvi, v. 19, no 4, 1962, 241-242, abstract HS 62-3066. (Montaž. spec. Rab. Stroit., v. 23, no. 9, 1961, 20)

TEXT: Dehydrators in the form of spherical containers of a 10.5 m diameter, 24 mm wall thickness, are assembled for the oil industry. The working pressure raises to 6 atm. Electrodes, insulators, and other equipment are installed inside. The container is assembled from 26 moulded parts of a sphere. According to the technical requirements, 41 m of the 205 m of welded seams have to be irradiated. The diagram of the apparatus. Operational procedure. Irradiation of the welded joints with one exposure is feasible and shortens the operation time. The irradiation intensity and safety conditions. There is 1 drawing.

[Abstracter's note: Complete translation.]

Card 1/1

APPROVED FOR RELEASE: 04/03/2001 CIA-RDP86-00513R001756630001-2"

"APPROVED FOR RELEASE: 04/03/2001 CIA-RDP86-00513R001756630001-2

TROFIMOV, M.A.

Hydraulic drawing rotor of an automatic rotor line. Kuz.-shtam. proizv 4 no.6:26-30 Je '62. (MIRA 15:6)
(Drawing (Metalwork)—Equipment and supplies)
(Rotors)

APPROVED FOR RELEASE: 04/03/2001 CIA-RDP86-00513R001756630001-2"

"APPROVED FOR RELEASE: 04/03/2001 CIA-RDP86-00513R001756630001-2

S/182/62/000/006/004/004
D040/D113

AUTHOR: Trofimov, M.A.

TITLE: Hydraulic extruding rotor for an automatic rotary-transfer machine line

PERIODICAL: Kuznechno-shtampovochnoye proizvodstvo, no. 6, 1962, 26-30

TEXT: The described three-station transfer-rotor extruding 60-320 mm long cups is designed for use in automatic rotary-transfer lines. It extrudes 10-20 cups/min and has a maximum pressure of 100 t. The component units are welded from standard rolled tube and sheet stock and are removable for transportation. Loading and unloading is automatic. The joining element for all major components is a hollow shaft in the center, connected by a cross coupling at the bottom end to a worm gearing, and by a short pipe at the top end to the hydraulic distributing system. The rotor design is such that it can be fabricated at any nonspecialized machine plant. The replacement and setting of extrusion tools is as simple as in a press. The system includes 2 separate pumps for the work stroke and the idle motion of the piston, electric drive motors for the pumps,

Card 1/2

APPROVED FOR RELEASE: 04/03/2001 CIA-RDP86-00513R001756630001-2"

"APPROVED FOR RELEASE: 04/03/2001 CIA-RDP86-00513R001756630001-2

S/182/62/000/006/004/004
D040/D113

Hydraulic extruding rotor for an automatic rotary-transfer machine line

and electromagnetic drain valves instantaneously functioning when the line operation stops. The top and bottom plates of the rotor frame are connected with 3 columns, and the rotor resting on a thrust ball bearing exerts no pressure on the plates by the work strokes. The hydraulic system is controlled from a separate control board with a tumbler switch for automatic operation or for setting. The extrusion rotor works just as economically as 2 new hydraulic presses produced by an Odessa plant. Detailed design and operation description includes a cross sectional view of the rotor and a diagram of the hydraulic system. There are 4 figures and 1 table.

Card 2/2

APPROVED FOR RELEASE: 04/03/2001 CIA-RDP86-00513R001756630001-2"

"APPROVED FOR RELEASE: 04/03/2001 CIA-RDP86-00513R001756630001-2

TROFIMOV, M. G., Cand Tech Sci -- (diss) "Research in basic highly refractory materials stable in the rammed lining of electric induction steel-~~casting~~ furnaces." Dnepropetrovsk, 1958. 16 pp; 1 sheet of tables (Min of Higher Education UkSSR, Dnepropetrovsk Order of Labor Red Banner Metallurgical Inst im I. V. Stalin), 200 copies (KL, 16-58, 121)

APPROVED FOR RELEASE: 04/03/2001 CIA-RDP86-00513R001756630001-2"

"APPROVED FOR RELEASE: 04/03/2001 CIA-RDP86-00513R001756630001-2

TROFIMOV, M.G.

Trofimov, M. G. SOME BASIC PROBLEMS OF THE REFRACTORIES INDUSTRY. *Ogneupory*, 8, 402 (1940) — A review of the present level of production in the various branches of the refractories industry in the USSR is presented.

APPROVED FOR RELEASE: 04/03/2001 CIA-RDP86-00513R001756630001-2"

"APPROVED FOR RELEASE: 04/03/2001 CIA-RDP86-00513R001756630001-2

Refractories

BCS TROFIMOV, M.G.

974. Spalling-resistant chrome-magnesite refractories for basic induction furnaces.—M. G. TROFIMOV and T. B. TATARSKAYA (*Огнеупоры*, 16, 354, 1951). It was found that chrome-magnesite refractories, especially used bricks from the roofs of steel furnaces, were the best of all the materials tested for the lining of H.F. furnaces. With this material a life up to 56 melts was reached in furnaces with a capacity up to 1·5 t. The best life was found with the most densely rammed linings. It was not confirmed that a higher life is obtained by hand ramming. Fused magnesite did not give a good life in a large H.F. furnace. Chrome-magnesite linings can also be used for the melting of steels and alloys containing little Cr. The life of the lining is increased by reducing the time between tapping and charging. (12 figs., 2 tables.)

APPROVED FOR RELEASE: 04/03/2001 CIA-RDP86-00513R001756630001-2"

"APPROVED FOR RELEASE: 04/03/2001 CIA-RDP86-00513R001756630001-2

S/128/62/000/008/002/003
A004/A127

AUTHOR: Trofimov, M.G.

TITLE: Lining of vacuum and open induction smelting furnaces

PERIODICAL: Liteynoye proizvodstvo, no. 8, 1962, 14 - 16

TEXT: The author presents a number of high-refractory compounds and production methods of refractory masses for the lining of induction furnaces for smelting heat-resistant alloys and alloyed steels. These refractory masses ensure a long service life of the lining and the production of metals free from non-metallic inclusions and impurities. With a smelting space of 10 - 50 kg the service life of the lining varies between 600 and 150 melts. The powdery mixtures to be fused are made of magnesite brick - ГОСТ (GOST) 4689-49, magnesite-chromite heat-resistant brick - МХ ЧМТУ (MKh ChMTU) 5929-55 and ПШ ЧМТУ (PSh ChMTU) 4531-54, commercial zirconium dioxide - МПТУ (MPTU) 4357-53. The crucible linings are mechanical mixtures made of separately melted constituents of molten magnesite ЭБ-98 (EB-98) and ЭБ-99 (EB-99) electrocorundum, containing not less than 94% MgO and ТУМТ-71-1 (TUMT-71-1) molten stabilized zirconium dioxide. As binders and mineralizers, which harden the rammed lining mass at high temperatures, either

Card 1/2

APPROVED FOR RELEASE: 04/03/2001 CIA-RDP86-00513R001756630001-2"

"APPROVED FOR RELEASE: 04/03/2001 CIA-RDP86-00513R001756630001-2

S/128/62/000/008/002/003
A004/A127

Lining of vacuum.....

caustic magnesite according to GOST 1216-41, fluorspar according to ЦМТУ (TsMTU) 1260-42 or boric acid according to GOST 2629-44 are used. For fixing the upper rammed layer of the wall face-end when the lining collar is prepared, either water glass according to GOST 4919-18, Chasov-yarsk refractory clay -ТУО (TUO)-51, caustic magnesite according to GOST 1216-41, dextrin according to GOST 6034-51 or sodium bisulfate according to GOST 6053-51 are used. The author gives a detailed description of the preparation of the raw materials, describes the making of the mixtures and presents two tables showing the various mixtures, their constituents in % and the granular composition of the masses according to fractions. Details on the ramming technique are given. The engineers M.Ya. Telis, A.A. Zharkikh, V.Z. Kheyfin and O.V. Provotorova participated in the work. There are 2 figures and 3 tables.

Card 2/2

APPROVED FOR RELEASE: 04/03/2001 CIA-RDP86-00513R001756630001-2"

"APPROVED FOR RELEASE: 04/03/2001 CIA-RDP86-00513R001756630001-2

TROFIMOV, M.G.

Lining of open and vacuum induction furnaces for the melting of heat-resistant alloys. Lit. proizv. no.12:13-17 D '61. (MIRA 14:12)

(Electric furnaces)
(Refractory materials)

APPROVED FOR RELEASE: 04/03/2001 CIA-RDP86-00513R001756630001-2"

"APPROVED FOR RELEASE: 04/03/2001 CIA-RDP86-00513R001756630001-2

TROFIMOV, M.G.

Dust control in refractories plants is our most important objective. Ogneupory 25 no.8:373-376 '60. (MIRA 13:9)
(Refractories industry) (Dust--Removal)

APPROVED FOR RELEASE: 04/03/2001 CIA-RDP86-00513R001756630001-2"

"APPROVED FOR RELEASE: 04/03/2001 CIA-RDP86-00513R001756630001-2

131-58-6-2/14

AUTHORS: Starun, V. R., Kolesnik, M. I., Sokolov, I. N., Trofimov, M. G., Dudavskiy, I. Ye.

TITLE: The Pressing of Magnesite-Chromite Products on Hydraulic Presses at High Specific Pressures (Pressovaniye magnezitokhromitovykh izdeliy na gidravlicheskikh pressakh pri vysokikh udel'nykh davleniyakh)

PERIODICAL: Ogneupory, 1958, Nr 6, pp. 244 - 25o (USSR)

ABSTRACT: 1) Adoption of high pressures in the manufacturing of vault products. The department for chromium-magnesite products at the Zaporozh'ye works is equipped with hydraulic UZTM presses of a pressing pressure of 1ooo t (figure 1). On these presses magnesite-chromite products of a length of 527 mm and a width of 155,5 mm can be pressed at a specific pressure of 116o kg/cm^2. In the case of smaller measurements of the bricks this pressure can be raised to from 13oo - 26oo kg /cm^2, however, with a number of difficulties arising, the principal being those of the separating into layers of the unfinished pieces under formation

Card 1/4

APPROVED FOR RELEASE: 04/03/2001 CIA-RDP86-00513R001756630001-2"

"APPROVED FOR RELEASE: 04/03/2001 CIA-RDP86-00513R001756630001-2

of cracks. This separating into layers occurred, as was found in practice, by a bending through of the molds at the pressing pressure of 1000 kg/cm^2. After the molds had been reinforced (figure 2) it was possible to overcome these difficulties. The experiments were carried out with a mass of 30% chromite and 70% magnesite powder, their granulation and content of humidity being mentioned in table 1. After all presses had been furnished with reinforced molds it was possible to work with high pressing pressure. In table 2 the weight by volume of the unfinished pieces of vault products for the last three months of 1957 was mentioned. The vault products of the Zaporozh'ye works have a smaller porosity than of other works and their strength increased by 20-40%, although the difficultly sintering chromite of the Kimpersaysk deposit was used.

2) Adoption of high pressing pressures in the production of products for converters with oxygen blowing, as well as of Martin furnace caissons. In the pressing of masses with a content of 60% fraction of less than 0,5 mm and among it a 40% fraction of less than 0,088 mm again separations of layers occurred which

APPROVED FOR RELEASE: 04/03/2001 CIA-RDP86-00513R001756630001-2"

"APPROVED FOR RELEASE: 04/03/2001 CIA-RDP86-00513R001756630001-2

are, however, explained only by the elastic properties of the mass itself. Investigations showed that the regime of the rise in pressing pressure as well as of the maintainance of the pressure play decisive part in this. The pressing regime is mentioned in a table. In table 3 the weight by volume of these products is mentioned for the last 3 months of 1957. When finely grained masses were used a slowed down pressing regime had to be fixed as can be seen from the table. The essential properties of the caisson and converter products are given in table 4.

3) The influence of the content of humidity of the initial powders and masses and the quality of their working. Practice showed that the use of powders with a humidity content of more than 1,5% abruptly decreases the pressability of the masses and brings about an increase of the waste by separation of the layers. It turned out that the grains, moistened by water, adsorb the binder less than do the dry ones; therefore the consecutive order of the addition of water and binder must be regulate correspondingly. The masses must also be better worked through,

APPROVED FOR RELEASE: 04/03/2001 CIA-RDP86-00513R001756630001-2"

"APPROVED FOR RELEASE: 04/03/2001 CIA-RDP86-00513R001756630001-2

The Pressing of Magnesite-Chromite Products on Hydraulic Presses at High Specific Pressures 131-58-6-2/14

which is secured by using the centrifugal edge mill "model 115". The use of high pressing pressures makes it possible to increase the density of the vault products as well as their strength in operation. There are 2 figures and 6 tables.

ASSOCIATION: Zaporozhskiy ogneuporny zavod (Zaporozh'ye Works of Refractories)

1. Chromium-magnesium alloys--Processing 2. Hydraulic presses--Performance

Card 4/4

APPROVED FOR RELEASE: 04/03/2001 CIA-RDP86-00513R001756630001-2"

"APPROVED FOR RELEASE: 04/03/2001 CIA-RDP86-00513R001756630001-2

131-58-6-3/14

AUTHORS: Davydov, I. P., Sokolov, I. N., Trofimov, M. G., Zhukova, P. I., Koroshchenko, A. A.

TITLE: Working of Magnesite-Chromite and Chamotte Masses in Centrifugal Edge Mills "Model 115" (Pererabotka magnezitokhromitovykh i shamotnykh mass na tsentrobezhnykh begunakh "Model' 115")

PERIODICAL: Ogneupory, 1958, Nr 6, pp. 25o - 257 (USSR)

ABSTRACT: The centrifugal edge mills "model 115" were developed by the Central Institute for Foundry-Machine Building. In the Zaporozh'ye works they are used for the working of the masses of refractory magnesite-chromite products as well as for chamotte masses. In figure 1 the construction of an edge mill for the production of refractory products is shown without any changes and then is described. The water is added automatically from the mains (see figure 2). The device for the supply of slip is shown in figure 3 and the total view of the edge mill "model 115" is shown in figure 4.

1) Production of chromium magnesite products. In the Zaporozh'ye works the edge mills are mounted under the devices for dosaging

Card 1/3

APPROVED FOR RELEASE: 04/03/2001 CIA-RDP86-00513R001756630001-2"

"APPROVED FOR RELEASE: 04/03/2001 CIA-RDP86-00513R001756630001-2

Working of Magnesite-Chromite and Chamotte Masses in Centrifugal Edge Mills "Model 115" 131-58-6-3/14

the weight. The charge is 600 kg. In order to find out the optimum working regime the influence of the duration of working on the granulation of the mass, the density of the raw products, as well as the properties of the finished products were checked. The results can be seen from table 2. Based on these results the mixing cycle, as mentioned in the table, was found. In table 3 the average weight by volume of the raw products is mentioned for January-February 1958, worked on centrifugal edge mills as well as on mixing edge mills.

2) Production of chamotte products. The dosaging of clay and chamotte is carried out by means of automatic weighing devices, of the slip volumetrically and also automatically with pneumatic control. From table 4 the influence of the duration of working on the granulation of the masses can be seen. In table 5 the weights by volume of the unfinished pieces as well as the properties of the products with durations of the working cycle of from 3-5 minutes are mentioned. In the production of chamotte the optimum charge of the edge mills is 500 kg.

Card 2/3

APPROVED FOR RELEASE: 04/03/2001 CIA-RDP86-00513R001756630001-2"

"APPROVED FOR RELEASE: 04/03/2001 CIA-RDP86-00513R001756630001-2

Working of Magnesite-Chromite and Chamotte Masses in Centrifugal Edge Mills "Model 115" 131-58-6-3/14

Final conclusions: 1) The centrifugal edge mills "model 115" can be used for the working of masses of magnesite-chromite as well as of chamotte products. It increases the output as well as the quality of the mass. 2) The use of centrifugal edge mills makes it possible to completely automize the working process of the masses. 3) It would be useful to organize the production of these edge mills for the industry of refractories. There are 4 figures and 6 tables.

ASSOCIATION: Zaporozhskiy ogneupornyy zavod (Zaporozh'ye Works of Refractories)

1. Chromium-magnesium alloys--Processing 2. Refractory materials --Production 3. Refractory materials--Properties 4. Foundries --Equipment

Card 3/3

APPROVED FOR RELEASE: 04/03/2001 CIA-RDP86-00513R001756630001-2"

"APPROVED FOR RELEASE: 04/03/2001 CIA-RDP86-00513R001756630001-2

STARUN, V.R.; KOLESNIK, M.I.; SOKOLOV, I.N.; TROFIMOV, M.G.; DUDAVSKIY, I.Ye.

Pressing magnesite-chrome products on hydraulic presses at high specific pressures. Ogneupory 23 no.6:244-250 '58. (MIRA 11:6)

1. Zaporozhskiy ogneupornyy zavod.
(Firebrick) (Power presses)

APPROVED FOR RELEASE: 04/03/2001 CIA-RDP86-00513R001756630001-2"

"APPROVED FOR RELEASE: 04/03/2001 CIA-RDP86-00513R001756630001-2

DAVYDOV, I.P.; SOKOLOV, I.N.; TROFIMOV, M.G.; ZHUKOVA, P.I.; KOROSHCHENKO, A.A.

Working magnesite-chrome and grog mixtures in "model-115" centrifugal mixers. Ogneupory 23 no.6:250-257 '58. (MIRA 11:6)

1. Zaporozhskiy ogneupornyy zavod.
(Refractory materials) (Centrifuges)

APPROVED FOR RELEASE: 04/03/2001 CIA-RDP86-00513R001756630001-2"

"APPROVED FOR RELEASE: 04/03/2001 CIA-RDP86-00513R001756630001-2

SOV/137-58-10-20443D

Translation from: Referativnyy zhurnal, Metallurgiya, 1958, Nr 10, p 14 (USSR)

AUTHOR: Trofimov, M. G.

TITLE: A Search for Basic Highly Refractory Materials Stable in the Rammed Lining of Electric-induction Steel-smelting Furnaces (Izyskaniye osnovnykh vysokoogneupornykh materialov, stoykikh v nabivnoy futerovke induktsionnykh elektrostaleplavil'nykh pechey)

ABSTRACT: Bibliographic entry on the author's dissertation for the degree of Candidate of Technical Sciences, presented to the Dnepropetr. metallurg. in-t (Dnepropetrovsk Institute of Metallurgy), Dnepropetrovsk, 1958

ASSOCIATION: Dnepropetr. metallurg. in-t (Dnepropetrovsk Institute of Metallurgy), Dnepropetrovsk

1. Furnaces--Equipment 2. Refractory material--Stability

Card 1/1

APPROVED FOR RELEASE: 04/03/2001 CIA-RDP86-00513R001756630001-2"

"APPROVED FOR RELEASE: 04/03/2001 CIA-RDP86-00513R001756630001-2

TROFIMOV, M. G.

SOV/128-58-11-24/24

Dissertations Presented for Obtaining Scientific Degrees

for thedegree of Cand. Tech. Sci. (dates not given)

istochnikov zagryazneniya stali oksidnymi vklyucheniyami po khodu vypuska i razlivki stali); R.P. Todorov (Kiyevskiy politekhnicheskiy institut - Kiyev Polytechnical Institute) Shrinkage Phenomena in Graphite Formation Processes in Magnesium Treated Cast Iron (Usadochnyye yavleniya v protsesse grafitoobrazovaniya v chugune, obrabotannom magniyem); M.G. Trofimov (Dnepropetrovskiy metallurgicheskiy institut imeni I.V. Stalina - Dnepropetrovsk Metallurgical Institute imeni I.V. Stalin) - Investigation of Basic High-Refractory Materials Resistant in Rammed Lining of Induction Electric Steel Melting Furnaces (Izyskaniye osnovnykh vysokoogneupornykh materialov, stoykikh v nabivnoy futerovke induktsionnykh elektrostaleplavil'nykh pechey); K.T. Chernousova (Moscow Institute of Non-Ferrous Metals and Gold imeni M.I. Kalinin) Investigation of Crack Formation in Crystallization of Aluminum Alloys (Issledovaniye treshchinoobrazovaniya pri kristallizatsii alyuminiyevykh splavov); G.A. Chilingarov (Moscow Institute of Steel imeni I.V. Stalin) - On the Effect of

Card 3/~~4~~
1/2 (Liteynoye proizvodstvo, 1958, No. 11, inside back cover)

APPROVED FOR RELEASE: 04/03/2001 CIA-RDP86-00513R001756630001-2"

"APPROVED FOR RELEASE: 04/03/2001 CIA-RDP86-00513R001756630001-2

SOV/128-58-11-24/24

Dissertations Presented for Obtaining Scientific Degrees

the Physical Structure of Sinter on Its Metallurgical Properties (O vliyanii fizicheskoy struktury aglomerata na yego metallurgicheskiye svoystva).

1. Scientific reports

Card 4/4

APPROVED FOR RELEASE: 04/03/2001 CIA-RDP86-00513R001756630001-2"

"APPROVED FOR RELEASE: 04/03/2001 CIA-RDP86-00513R001756630001-2

AUTHOR: Trofimov, M. G. SOV/131-58-9-4/11

TITLE: Stable Volume-Constant Magnesite-Chromite Lining of Steel-Melting Induction Furnaces (Stoykaya ob"yemopostoyannaya magnezitokhromitovaya futerovka induktsionnykh staleplavil'nykh pechey)

PERIODICAL: Ogneupory, 1958, Nr 9, pp. 409 - 416 (USSR)

ABSTRACT: With an acid lining the advantages of induction furnaces cannot be perfectly utilized. In table 1 the stability of a basic lining is given according to foreign data. The insufficient volume constancy and the low heat resistance of the used refractories are considered to be the reason of the low stability of the basic lining of the steel-melting induction furnaces. The author of this paper succeeded to find by means of laboratory experiments a stable magnesite-chromite casing. The testing of this casing in the Zaporozhstal'" Works in furnaces with a 2,5 t capacity gave good results. S.K. Voskresenskaya, A.S.Tkachenko, Ye.I.Koval'chuk, G.T.Duzenko, Ye.P.Tret'yak, and Yu.N.Kol'bus (Ref 1) were participating in this study. In figure 1 the furnace lining is portrayed

Card 1/2

APPROVED FOR RELEASE: 04/03/2001 CIA-RDP86-00513R001756630001-2"

"APPROVED FOR RELEASE: 04/03/2001 CIA-RDP86-00513R001756630001-2

schematically. Figure 2 shows the burnt-out profile of the magnesite crucible and figure 3 that of the magnesite-chromite crucible. In table 3 the results of 6 test crucibles in 2,5 t induction furnaces are presented. In table 4 the stability of crucibles in high-frequency furnaces is given from which the superiority of the magnesite-chromite casing can be seen. Conclusions: The magnesite-chromite casing exhibits no shrinkage and works reliably. This casing is recommendable for high-frequency induction furnaces with a capacity up to 2,5 t. It would be advisable to carry out investigations with larger furnaces. There are 3 figures, 4 tables, and 3 references, 2 of which are Soviet.

ASSOCIATION: Zaporozhskiy ogneupornyy zavod (Zaporozh'ye Refractories Works)

APPROVED FOR RELEASE: 04/03/2001 CIA-RDP86-00513R001756630001-2"

"APPROVED FOR RELEASE: 04/03/2001 CIA-RDP86-00513R001756630001-2

30232

S/128/61/000/012/002/004
A004/A127

15 2230

AUTHOR: Trofimov, M.G.

TITLE: The lining of open and vacuum induction furnaces for melting heat-resisting alloys

PERIODICAL: Liteynoye proizvodstvo, no. 12, 1961, 13 - 17

TEXT: The author presents a detailed survey on the properties of open and vacuum induction furnace linings and analyzes their advantages and deficiencies. He points out that an acid lining of quartzites does not make it possible to obtain metals and alloys of high chemical purity with the necessary physical-mechanical properties, while numerous investigations and industrial tests have proved that linings from magnesite, dolomite, chromite, zircon, alumina, corundum, zirconium dioxide and forsterite do not meet the growing demands towards refractories in open and, even less, in vacuum induction furnaces. Some of the main reasons of the low service life of induction furnace linings are the insufficient volume constancy, high thermal expansivity coefficient, low heat resistance and great additional shrinkage of the refractory materials. Shrinkage cracks occur the more often, the larger the volume of the melting

Card 1/4

APPROVED FOR RELEASE: 04/03/2001 CIA-RDP86-00513R001756630001-2"

"APPROVED FOR RELEASE: 04/03/2001 CIA-RDP86-00513R001756630001-2

30232

S/128/61/000/012/002/004

The lining of open and vacuum induction furnaces for.. A004/A127

space. A considerable effect on the wear of the lining is also shown by the physical properties of its contact surface, such as density, mechanical strength and vitrification. The lining should possess a minimum coefficient of thermal expansivity, i.e., it should have a constant volume or possess a comparatively low growth (0.1 - 0.3%). The electric conductivity of the lining in the cold and hot state should be as low as possible. The author emphasizes that the demands towards the lining in vacuum induction furnaces are much higher than in open furnaces, since the interaction between metal and refractories is considerably activated. He divides the oxide refractories used for the lining of vacuum induction furnaces into two groups, the first group including magnesium and calcium oxide and dolomite - metal oxides with a high vapor pressure and low solubility in the molten metal, while silica, alumina and zirconium dioxide - oxides whose reduced metals possess a low vapor pressure and a good solubility in the molten metal, belong to the second group. Based on investigations, the author points out that magnesium and calcium oxides are to be preferred to aluminum oxide and zirconium dioxide, since the metallic magnesium is eliminated in the form of vapors, while aluminum and zirconium dissolve in the metal. The author analyzes the properties of the various materials as to their applicability in open and vacuum induction furnaces, presents a number of ta-

X

Card 2/4

APPROVED FOR RELEASE: 04/03/2001 CIA-RDP86-00513R001756630001-2"

"APPROVED FOR RELEASE: 04/03/2001 CIA-RDP86-00513R001756630001-2

30232
S/128/61/000/012/002/004
A004/A127

The lining of open and vacuum induction furnaces....

bles showing their technoligical properties, composition and service life and recommends the use of synthetic refractories consisting mainly of magnesia spinel - $MgO \cdot Al_2O_3$ or chrome spinellide - MgO (Cr_2O_3, Al_2O_3, Fe_2O_3) and solid solutions of zirconium dioxide. These materials are produced by melting in electric arc furnaces or baking in ceramic roasting kilns at temperatures in the range of 1,600 - 1,750°C. They are composed of 20 - 80% magnesite and 80 - 20% alumina or 20 - 80% magnesite and 80 - 20% chromite of the Kempirsay deposits. Their heat resistance and coefficient of thermal expansivity are improved by adding 5 - 10% zirconium dioxide. The chemical composition of the initial constituents for synthetic refractories according to ГОСТ(GOST) and ТУ(TU) are given in a table. The author enumerates the properties of some rammed linings made of synthetic refractories and stresses their high service life (120 - 200 heats). Synthetic refractories of the spinel-type are characterized by the following data: melting point 2,200 - 2,500°C; coefficient of thermal expansivity 50 - 90 · 10^{-6}; volume constancy (at operating temperatures of 1,550 - 1,720°C) no shrinkage cracks; heat resistance more than 25 heat shifts; heat conduction in cal-sec-cm-degree at 100°C 0.03 - 0.08, at 1,800°C 0.01 - 0.02; metal and slagging resistance good; porosity in % 15 - 25; volumetric weight in g/cm^3 2.8 - 3.4. Data on the linear expansion of $MgO \cdot Al_2O_3$ spinel during

X

Card 3/4

APPROVED FOR RELEASE: 04/03/2001 CIA-RDP86-00513R001756630001-2"

"APPROVED FOR RELEASE: 04/03/2001 CIA-RDP86-00513R001756630001-2

30232

3/128/61/000/012/002/004

The lining of open and vacuum induction furnaces.... A004/A127

heating in comparison with MgO, Al_2O_3 and ZrO_2 are presented in a table, which shows that the most important service characteristic - thermal expansivity - is considerably better for spinel than for each of its composing oxides. For the melting of not too large quantities of refractories (up to 100 kg per shift) the author recommends two-pole electric arc furnaces of whose design he presents a brief description. There are 5 figures, 4 tables and 9 references: 6 Soviet-bloc and 3 non-Soviet-bloc. The references to the English-language publications read as follows: Transactions of the British ceramic Society, VIII, 1949. Nat. Sympos. Vacuum Technol., London, 1957.

Card 4/4

APPROVED FOR RELEASE: 04/03/2001 CIA-RDP86-00513R001756630001-2"

"APPROVED FOR RELEASE: 04/03/2001 CIA-RDP86-00513R001756630001-2

/2927 Magnesia refractories from sea-water.—M. G. TROFIMOV and V. A. RYBNIKOV [illegible] After a brief discussion of the possibilities of producing [illegible] concentrated brines of the Crimean

quality have already [illegible]

APPROVED FOR RELEASE: 04/03/2001 CIA-RDP86-00513R001756630001-2"

"APPROVED FOR RELEASE: 04/03/2001 CIA-RDP86-00513R001756630001-2

M. G. [illegible] and 1.5%

APPROVED FOR RELEASE: 04/03/2001 CIA-RDP86-00513R001756630001-2"

"APPROVED FOR RELEASE: 04/03/2001 CIA-RDP86-00513R001756630001-2

TROFIMOV, M.G.; Prinimali uchastiye: TELIS, M.Ya., inzh.; ZHARKIKH, A.A.; KHEYFIN, V.Z.; PROVOTOROVA, G.V.

Lining of vacuum and open induction smelting furnaces. Lit. proizv. no.8:14-16 Ag '62. (MIRA 15:11)
(Electric furnaces) (Refractory materials)

APPROVED FOR RELEASE: 04/03/2001 CIA-RDP86-00513R001756630001-2"

"APPROVED FOR RELEASE: 04/03/2001 CIA-RDP86-00513R001756630001-2

M-4

Country : USSR
CATEGORY :

ABS. JOUR. : RZBiol., No. 19, 1958, No. 87046

AUTHOR : Trofimov, M. M.
INST. :
TITLE : Chufa in the Southeast

ORIG. PUB. : S. Kh. Povolzh'ya, 1956, No 6, 78-79

ABSTRACT : In the USSR, chufa (Cyperus esculentus L.) is grown as an annual crop. Duration of its growing period in the Astrakhanskaya Oblast' is of 120-140 days, and in the Saratovskaya Oblast' 140-150 days. Sowing of chufa is carried out when the temperature of the soil is 12-14° (late April-early May in Astrakhanskaya Oblast', about the middle of May in Saratovskaya Oblast'). It is grown on land having excess moisture content (Volga-Akhtubinsk bottom-lands and delta of the Volga). In the Southeast, chufa can be grown only on irrigated land. Experiments of Saratov Agricultural Institute and Astrakhan Agricultural Experiment Station indicate the feasibility and favorable outlook of growing chufa in the area of hydraulic works of the Volga-Don system. -- V. F. Nepomiluyev.

CARD: 1/1

APPROVED FOR RELEASE: 04/03/2001 CIA-RDP86-00513R001756630001-2"

"APPROVED FOR RELEASE: 04/03/2001 CIA-RDP86-00513R001756630001-2

COUNTRY : USSR M
CATEGORY : Cultivated Plants. Cereals.

ABS. JOUR. : RZhBiol., No.23 1958, No. 104660

AUTHOR : Smirnov, A. I., Trofimov, M. M., Il'ichova, O. M., *)
INST. : Saratov Agricultural Institute
TITLE : Rice in Saratov Oblast'.

ORIG. PUB. : Tr. Saratovsk. s.-kh. in-ta, 1957, 10, 138-150

ABSTRACT : Climatic and soil conditions of the left shoreline of Volga permit rice growing. A number of varieties with a short vegetative period have been brought out for the cultivation of rice in the oblast'. The varieties recommended, produced grain yields of 20-30 centners/ha. In quality and chemical composition, the grain was not inferior to the varieties grown in the southern regions of Ukrainian SSR. Measures of agricultural technique for rice are cited: sowing dates, seed planting depth, methods of sowing, application of water and the maintenance of the crop.
*) Komarov, B. A.

Card: 1/1

APPROVED FOR RELEASE: 04/03/2001 CIA-RDP86-00513R001756630001-2"

"APPROVED FOR RELEASE: 04/03/2001 CIA-RDP86-00513R001756630001-2

COUNTRY : USSR
CATEGORY : Cultivated Plants. Cereals. M

ABS. JOUR. : RZhBiol., No.14, 1958, No.63366

AUTHOR : Trofimov, M. M., Komarov, B. A.
INST. : -
TITLE : Cultivation of Rice in Saratov Oblast'.

ORIG. PUB. : V sb.: Kratkiye itogi nauchno-issled. raboty (Kubansk. ris. opytn. st.) za 1956 g. Krasnodar, "Sov. Kuban'".1957,138-14.

ABSTRACT : The soil and climatic conditions of Saratovskoye Zavolzh'ye permit production of a yield of 30-40 c/ha (1954-1956 trials) with the cultivation of rapidly maturing varieties. The principal methods of agricultural technique for rice in Zavolzh'ye are: irrigation with reduced flooding, thicker plantings, measures directed towards the shortening of the vegetative period. -- O. V. Yakushkina

Card: 1/1

APPROVED FOR RELEASE: 04/03/2001 CIA-RDP86-00513R001756630001-2"

"APPROVED FOR RELEASE: 04/03/2001 CIA-RDP86-00513R001756630001-2

SMIRNOV, A. I.; TROFIMOV, M. M.

Irrigation Farming - Volga Valley

Stubble crops on irrigated farms in the Trans-Volga. Sov. agron. 10, no. 8, 1952.

Monthly list of Russian Accessions, Library of Congress, September, 1952 UNCLASSIFIED.

APPROVED FOR RELEASE: 04/03/2001 CIA-RDP86-00513R001756630001-2"

"APPROVED FOR RELEASE: 04/03/2001 CIA-RDP86-00513R001756630001-2

SMIRNOV, A. I., TROFIMOV, M. M.

Volga Valley - Irrigation Farming

Stubble crops on irrigated farms in the Trans-Volg. Sov. agron. 10, No. 8, 1952

Monthly List of Russian Accessions, Library of Congress, September 1952. UNCLASSIFIED.

APPROVED FOR RELEASE: 04/03/2001 CIA-RDP86-00513R001756630001-2"

"APPROVED FOR RELEASE: 04/03/2001 CIA-RDP86-00513R001756630001-2

TROFIMOV, M.T., inzh.

Estimating the accuracy of elements of a trilateration network laid out for mine surveying purposes. Izv.vys.ucheb.zav.;gor.zhur. 7 no.9:40-47 '64. (MIRA 18:1)

1. Leningradskiy ordena Lenina i ordena Trudovogo Krasnogo Znameni gornyy institut imeni G.V.Plekhanova. Rekomendovana kafedroy geodezii.

APPROVED FOR RELEASE: 04/03/2001 CIA-RDP86-00513R001756630001-2"

"APPROVED FOR RELEASE: 04/03/2001 CIA-RDP86-00513R001756630001-2

TROFIMOV, M.T., inzh.

Considering errors in initial data of a trilateration network laid off for mine surveying purposes. Izv.vys. ucheb.zav.; gor.zhur. 8 no.11:36-44 '65. (MIRA 19:1)

1. Leningradskiy ordena Lenina i ordena Trudovogo Krasnogo Znameni gornyy institut imeni Plekhanova. Rekomendovana kafedroy geodezii. Submitted March 10, 1965.

APPROVED FOR RELEASE: 04/03/2001 CIA-RDP86-00513R001756630001-2"

"APPROVED FOR RELEASE: 04/03/2001 CIA-RDP86-00513R001756630001-2

TROFIMOV, N.

Unit for drying cement tie bars. Stroitel' no. 3:11 Mr '61. (MIRA 14:2)

(Drying apparatus)

APPROVED FOR RELEASE: 04/03/2001 CIA-RDP86-00513R001756630001-2"

"APPROVED FOR RELEASE: 04/03/2001 CIA-RDP86-00513R001756630001-2

TROFIMOV, N.

AID P - 407

Subject : USSR/Aeronautics

Card 1/1 Pub. 135, 3/17

Author : Trofimov, N., Col. of the Guard, Hero of the Soviet Union

Title : The first attack

Periodical : Vest. vozd. flota, 9, 14-22, S 1954

Abstract : A detailed study of the first attack of fighters on enemy bombers, flying single or in formation. Several examples are given, and names of officers mentioned. Diagrams.

Institution : None

Submitted : No date

APPROVED FOR RELEASE: 04/03/2001 CIA-RDP86-00513R001756630001-2"

"APPROVED FOR RELEASE: 04/03/2001 CIA-RDP86-00513R001756630001-2

1. TROFIMOV, N.

2. USSR (600)

4. Machine-Tractor Stations - Accounting

7. "Computation of work payments at harvests with combines of the machine-tractor station." and "Collection of computation tables for machine-tractor stations." S. P. Puryshev. Reviewed by N. Trofimov. Vest stat No. 6 1952.

9. Monthly List of Russian Accessions, Library of Congress, April 1953, Uncl.

APPROVED FOR RELEASE: 04/03/2001 CIA-RDP86-00513R001756630001-2"

"APPROVED FOR RELEASE: 04/03/2001 CIA-RDP86-00513R001756630001-2

TROFIMOV, N.; FEDOROV, A.; SEMENKOV, A.

The main thing is not hours, but hectares. Grazhd. av. 21 no.10:25 O '64. (MIRA 18:3)

1. Zamestitel' komandira Stavropol'skogo aviapodrazdeleniya po politicheskoy chasti (for Trofimov). 2. Starshiy inzh.-ekonomist Stavropol'skogo aviapodrazdeleniya (for Semenkov).

APPROVED FOR RELEASE: 04/03/2001 CIA-RDP86-00513R001756630001-2"

"APPROVED FOR RELEASE: 04/03/2001 CIA-RDP86-00513R001756630001-2

TROFIMOV, N.

British miners are our guests. Mast.ugl. 9 no.1:25 Ja '60. (MIRA 13:8)

(Russia--Relations (General) with Great Britain)
(Great Britain--Relations (General) with Russia)

APPROVED FOR RELEASE: 04/03/2001 CIA-RDP86-00513R001756630001-2"

"APPROVED FOR RELEASE: 04/03/2001 CIA-RDP86-00513R001756630001-2

TROFIMOV, N.A., leytenant meditsinskoy sluzhby

Universal transport splint for immobilization of the skull, spine, femur, and pelvis. Voen.-med. zhur. no. 1:88 Ja '60. (MIRA 14:2)

(SPLINTS (SURGERY))

APPROVED FOR RELEASE: 04/03/2001 CIA-RDP86-00513R001756630001-2"

"APPROVED FOR RELEASE: 04/03/2001 CIA-RDP86-00513R001756630001-2

AL'TMAN, M.B.; BOROK, B.A.; MERKULOV, V.V.; MALIN, A.P.; SPEKTOR, Yu.V.; NIKITSKIY, S.V.; TROFIMOV, N.I.; LAMBINA, V.I.

Foamed aluminum castings. Alium. splavy no.1:41-49 '63. (MIRA 16:11)

APPROVED FOR RELEASE: 04/03/2001 CIA-RDP86-00513R001756630001-2"

"APPROVED FOR RELEASE: 04/03/2001 CIA-RDP86-00513R001756630001-2

TROFIMOV, N.I., inzh.

First in the U.S.S.R. welded petroleum pipeline Groznyy - Tuapse. Stroi.truboprov. 3 no.12:27-28 D '58. (MIRA 12:1)
(Petroleum--Pipelines) (Pipelines--Welding)

APPROVED FOR RELEASE: 04/03/2001 CIA-RDP86-00513R001756630001-2"

"APPROVED FOR RELEASE: 04/03/2001 CIA-RDP86-00513R001756630001-2

TROFIMOV, N.I., inzh.

X-raying welded joints of spherical electric dehydrators with gamma rays. Mont. i spets. rab. v stroi. 23 no.9:20 S '6 . (MIRA 14:9)

(Gamma rays--Industrial applications)

APPROVED FOR RELEASE: 04/03/2001 CIA-RDP86-00513R001756630001-2"

"APPROVED FOR RELEASE: 04/03/2001 CIA-RDP86-00513R001756630001-2

S/137/62/000/002/126/144
A052/A101

AUTHOR: Trofimov, N. I.

TITLE: γ-ray fluoroscopy of welded seams of electric spherical dehydrators

PERIODICAL: Referativnyy zhurnal, Metallurgiya, no. 2, 1962, 49, abstract 2E278 ("Montazhn. i spetsializir. raboty v str-ve", 1961, no. 9, 20)

TEXT: The practice of γ-ray fluoroscopy of welded seams of electric spherical dehydrators at the Ryazan' oil refinery is described. To perform this work there were a high-capacity Cs^{137} ampoule of 1.85 g-equiv Ra activity and 82 cassettes, furnished with Pb and intensifying screens for films of various lengths. Based on the fluoroscopy practice the following conclusions are drawn: 1) the fluoroscopy of welded seams on bodies of spherical containers 10.5m in diameter in one exposure is quite possible; 2) the exposure time at the fluoroscopy with Cs^{137} ampoule of 1.85 g-equiv Ra activity should be increased to 11 hours, which will raise the sensitivity of radiographs and the optical density; 3) the irradiation dose received by the radiographer when installing and taking off the ampoule fluctuates, according to the dosimeter indications, from 35 to 45 mr, that is it does not exceed the admissible irradiation dose (50 mr per day).

Card 1/2

APPROVED FOR RELEASE: 04/03/2001 CIA-RDP86-00513R001756630001-2"

"APPROVED FOR RELEASE: 04/03/2001 CIA-RDP86-00513R001756630001-2

γ-ray fluoroscopy of welded seams ... S/137/62/000/002/125/144
A052/A101

To reduce the irradiation dose it is necessary to develop a distance appliance permitting to bring the ampoule in an open state at a distance of up to 5 mm; 4) the fluoroscopy should be made immediately after the completion of welding works on the body and exterior inspection, and prior to the installation of the equipment inside the body; 5) during fluoroscopy nobody should be present on the electric dehydrators or near them (at a distance of 20 m), therefore it is recommended to carry out the preliminary works and the fluoroscopy (for which ~20 hours are necessary) during the second and third shift.

V. Tarisova

[Abstracter's note: Complete translation]

Card 2/2

APPROVED FOR RELEASE: 04/03/2001 CIA-RDP86-00513R001756630001-2"

"APPROVED FOR RELEASE: 04/03/2001 CIA-RDP86-00513R001756630001-2

GAKKEL', L.B.; MOLOTKOVA, I.A.; TROFIMOV, N.M.

Study of disorders of neural processes in oligophrenia [with summary in English]. Zhur.vys.nerv.deiat. 7 no.4:494-500 Jl-Ag '57. (MIRA 10:12)

1. Laboratoriya patofiziologii vysshey nervnoy deyatel'nosti cheloveka Fiziologicheskogo otdela im. I.P.Pavlova Instituta eksperimental'noy meditsiny AMN SSSR.

(MENTAL DEFICIENCY, physiology,
conditioned reflex determ. of neural funct. (Rus))
(REFLEX, CONDITIONED,
in ment. defic., determ. of neural funct. (Rus))

APPROVED FOR RELEASE: 04/03/2001 CIA-RDP86-00513R001756630001-2"

"APPROVED FOR RELEASE: 04/03/2001 CIA-RDP86-00513R001756630001-2

AYZENSHTADT, G.Ye.-A.; GRINBERG, I.G.; D'YAKOV, B.F.; NEVOLIN, N.V.; TROFIMOV, N.K.; CHEREPANOV, N.N.; EVENTOV, Ya.S.

Outlook for petroleum and gas in western Kazakhstan and basic trends in regional prospecting. Geol. nefti i gaza 4 no.2:10-15 F '60. (MIRA 13:10)

1. Vsesoyuznyy neftyanoy nauchno-issledovatel'skiy institut, Vsesoyuznyy nauchno-issledovatel'skiy institut geofizicheskikh metodov razvedki i Vsesoyuznyy nauchno-issledovatel'skiy geologorazvedochnyy institut.
(Kazakhstan--Petroleum geology)
(Kazakhstan--Gas, Natural--Geology)

APPROVED FOR RELEASE: 04/03/2001 CIA-RDP86-00513R001756630001-2"

"APPROVED FOR RELEASE: 04/03/2001 CIA-RDP86-00513R001756630001-2

T

Country : USSR
Category: Human and Animal Physiology. Nervous System. Higher Nervous Activity. Behavior

Abs Jour: RZhBiol., N. 19, 1958, 89263

Author : Gakkel, L.B.; Melotkova, I.A.; Trofimov, N.M.
Inst : -
Title : Investigation of the Disturbances of Nervous Processes in Oligophrenic Patients.

Orig Pub: Zh. Vyssh. nerv. deyat-sti, 1957, 7, No 4, 494-500

Abstract: In 50 patients with oligophrenia without gross focal changes, disorders of the regulation of the vegetative functions were observed; absence of vasomotor reactions in subjects with severe degrees of disturbances of the higher nervous activity, low mobility and arrhythmy of the respiratory curve;

Card : 1/3

T-120

APPROVED FOR RELEASE: 04/03/2001 CIA-RDP86-00513R001756630001-2"

"APPROVED FOR RELEASE: 04/03/2001 CIA-RDP86-00513R001756630001-2

T

Country : USSR
Category: Human and Animal Physiology. Nervous System. Higher Nervous Activity. Behavior.

Abs Jour: RZhBiol., No 19, 1958, 89263

weak expression of the non-conditioned alimentary reflex. Oriented activity was absent or was inert. Consolidation and extinction of motor conditioned reflexes pointed to the inertia of the excitatory process. The weakness of internal inhibition was manifested in the lack of consolidation of differentiations and was compensated by the administration of minimal doses of NaBr. The difficulty of formation of conditioned reflexes to complex stimulants was evidence of disturbances of the synthetic activity. A pathological consolidation of formed temporary associa-

Card : 2/3

APPROVED FOR RELEASE: 04/03/2001 CIA-RDP86-00513R001756630001-2"

"APPROVED FOR RELEASE: 04/03/2001 CIA-RDP86-00513R001756630001-2

Country : USSR
Category: Human and Animal Physiology. Nervous System. Higher Nervous Activity. Behavior. T

Abs Jour: RZhBiol., No 19, 1958, 89263

tions in the first signal system as well as between the signal systems was noted. -- N.N. Zislina.

Card : 3/3

T-121

APPROVED FOR RELEASE: 04/03/2001 CIA-RDP86-00513R001756630001-2"

"APPROVED FOR RELEASE: 04/03/2001 CIA-RDP86-00513R001756630001-2

TROFIMOV, N.M.

TROFIMOV, N.M.

Peculiarities of conditioned reflex activity in various stages of underdeveloped higher nervous activity in man. Zhur.vys.nerv. deiat.5 no.3:358-362 My-Je '55. (MLRA 8:10)

1. Laboratoriya patofiziologii vysshey nervnoy deyatel'nosti cheloveka Instituta eksperimental'noy meditsiny AMN SSSR

(REFLEX, CONDITIONED,
in underdevelop.higher nervous funct.)
(CENTRAL NERVOUS SYSTEM,
underdevelop. of higher nervous funct. conditioned reflex in)

APPROVED FOR RELEASE: 04/03/2001 CIA-RDP86-00513R001756630001-2"

"APPROVED FOR RELEASE: 04/03/2001 CIA-RDP86-00513R001756630001-2

MOPTHOV, N. H.

"Filtration of Water though Dams," Iz Turkmen Fil Akad Nauk SSSR, No 3, 1945 (77-80). (Meteorologiya i Gidrologiya, No 6 Nov/Dec 1947)

SO: U-3218, 3 Apr 1953

APPROVED FOR RELEASE: 04/03/2001 CIA-RDP86-00513R001756630001-2"

"APPROVED FOR RELEASE: 04/03/2001 CIA-RDP86-00513R001756630001-2

TROFIMOV, N.M.

Problem of cortical regulation of respiration. Fiziol. zh. SSSR 38 no. 5:584-592 Sept-Oct 1952. (CIML 23:3)

1. Institute of Experimental Medicine, Academy of Medical Sciences USSR, Leningrad.

APPROVED FOR RELEASE: 04/03/2001 CIA-RDP86-00513R001756630001-2"

"APPROVED FOR RELEASE: 04/03/2001 CIA-RDP86-00513R001756630001-2

TROFIMOV, N. M.

"A Comprehensive Study of Higher Nervous Activity During Various Degrees of Oligophrenia." Cand Med Sci, Inst of Experimental Medicine, Acad Med Sci USSR, Leningrad, 1953. (RZhBiol, No 2, Jan 55)

Survey of Scientific and Technical Dissertations Defended at USSR Higher Educational Institutions (12)
SO: Sum. No. 556, 24 Jun 55

APPROVED FOR RELEASE: 04/03/2001 CIA-RDP86-00513R001756630001-2"

"APPROVED FOR RELEASE: 04/03/2001 CIA-RDP86-00513R001756630001-2

TROFIMOV, N.M.

Mechanism of inductive correlations between the signal systems.
Zh. vys. nerv. deiat. 5 no.6:816-824 N-D '55. (MLRA 9:3)

1. Laboratoriya patofiziologii vysshey nervnoy deyatel'nosti cheloveka fiziologicheskogo otdela imeni. I.P. Pavlova IEM AMN SSSR.
(CEREBRAL CORTEX, physiology,
signal systems, inductive correlations, mechanism)

APPROVED FOR RELEASE: 04/03/2001 CIA-RDP86-00513R001756630001-2"

"APPROVED FOR RELEASE: 04/03/2001 CIA-RDP86-00513R001756630001-2

L 13088-66 EWT(m)/EWP(v)/T/EWP(t)/EWP(k)/EWP(b)/EWA(c) JD/HM/HW

ACC NR: AP6000619 SOURCE CODE: UR/0135/65/000/012/0040/0041

76
75
B

AUTHOR: Trofimov, N. M.

ORG: none

6,44,55

TITLE: Power supply for pulse arc welding in an argon atmosphere

SOURCE: Svarochnoye proizvodstvo, no. 12, 1965, 40-41

TOPIC TAGS: arc welding, electric power source, argon, electrode, welding equipment, pulse welding, circuit design, semiconductor device, sheet metal

ABSTRACT: A power supply was developed for pulse arc welding using semiconducting triodes for the control, commutation and stabilization of arc current. Its range of operation was 5 to 65 amps for 0.1 to 0.8 sec. The circuit diagram is shown in fig. 1. The basic components of the system were 5 three-phase transformers (Tp1), 4 rectifiers (B), 26 semiconducting triodes (T) and 1 oscillator (OCTs); resistors (R) were used for regulation and control. In the emitter, the resistors served to average the characteristics of the parallel set of triodes. During welding the switch P1 is closed and the pulse interval is regulated by the settings of the resistances R_{34} and R_{35}. During the welding pulse, triode T25 is switched off and the magnitude of the welding current is

UDC: 621.791.753.93.03

Card 1/3

APPROVED FOR RELEASE: 04/03/2001 CIA-RDP86-00513R001756630001-2"

"APPROVED FOR RELEASE: 04/03/2001 CIA-RDP86-00513R001756630001-2

L 13088-66

ACC NR: AP6000619

determined by the setting of R_{37}. Experimental results showing the circuit characteristics under welding conditions are given. The static

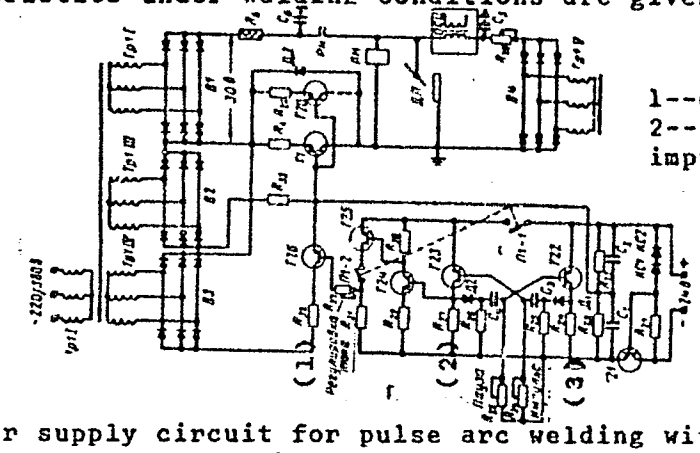

1--current regulator; 2--interval; 3--impulse

Fig. 1. Power supply circuit for pulse arc welding with nonfusible electrodes in an argon atmosphere.

characteristics of the arc and power supply are reproduced. The advantages accruing from the use of semiconducting triodes in the power unit are: low inertial commutation, improved current stabilization and effi-

Card 2/3

APPROVED FOR RELEASE: 04/03/2001 CIA-RDP86-00513R001756630001-2"

"APPROVED FOR RELEASE: 04/03/2001 CIA-RDP86-00513R001756630001-2

L 13088-66
ACC NR: AP6000619

cient commutation and control. The leakage power of the triodes was given as a function of current for various internal characteristics. It was shown that the nominal power leakage from the triode blocks was similar for directly falling or efficient rising characteristics. The utility of this power-supply was recommended for argon arc welding of thin sheets (0.1 to 0.5 mm). Trial usage in plants for over a year has confirmed the reliability of the units. Orig. art. has: 3 figures.

SUB CODE: 13,09/ SUBM DATE: 00/ ORIG REF: 000/ OTH REF: 000

Card 3/3

APPROVED FOR RELEASE: 04/03/2001 CIA-RDP86-00513R001756630001-2"

"APPROVED FOR RELEASE: 04/03/2001 CIA-RDP86-00513R001756630001-2

L 27262-66 EWP(k)/EWT(d)/EWP(h)/EWP(1)/EWP(v)

ACC NR: AP6009523 SOURCE CODE: UR/0413/66/000/005/0048/0048

AUTHORS: Trofimov, N. M.; Arekhtyuk, Yu. A.; Lyashenko, L. V.

ORG: none

TITLE: Device for supplying pulse current to a welding arc. Class 21, No. 179401

SOURCE: Izobreteniya, promyshlennyye obraztsy, tovarnyye znaki, no. 5, 1966, 48

TOPIC TAGS: welding equipment, welding equipment component, arc welding

ABSTRACT: This Author Certificate presents a device for supplying pulse current to a welding arc, containing a rectifier for supplying the basic arc, a rectifier for supplying the pilot arc, an oscillator, and a control circuit for stabilizing and modulating the welding current pulses. To simplify construction and to reduce weight and size, the control circuit is based on semiconductor triodes, while the oscillator is connected to the pilot arc circuit through a transformer with a ferrite core.

SUB CODE: 13/ SUBM DATE: 04Jun62

UDC: 621.791.037
621.373

Card 1/1

APPROVED FOR RELEASE: 04/03/2001 CIA-RDP86-00513R001756630001-2"

"APPROVED FOR RELEASE: 04/03/2001 CIA-RDP86-00513R001756630001-2

KAMINSKIY, F.V.; NESMIKH, G.S.; TROFIMOV, N.N.

Age of molybdenum mineralization in the Kudikan ore manifestation of eastern Transbaikalia. Izv. AN SSSR. Ser. geol. 29 no.4:85-89 Ap'64. (MIRA 17:5)

1. Universitet durzhby narodov im. P. Lumumby, Moskva.

APPROVED FOR RELEASE: 04/03/2001 CIA-RDP86-00513R001756630001-2"

"APPROVED FOR RELEASE: 04/03/2001 CIA-RDP86-00513R001756630001-2

NESMIKH, G.S., aspirant; TROFIMOV, N.N.

Apparent geochemical connection between complex metal mineralization in the Akatuy ore zone and Mesozoic intrusions. Izv.vys.ucheb.zav.; geol. i razv. 7 no.3:70-78 Mr '64. (MIRA 18:3)

1. Universitet druzhby narodov im. P.Lumumby.

APPROVED FOR RELEASE: 04/03/2001 CIA-RDP86-00513R001756630001-2"

"APPROVED FOR RELEASE: 04/03/2001 CIA-RDP86-00513R001756630001-2

ETLIS, V.S.; TROFIMOV, N.N.; RAZUVAYEV, G.A.

Chlorination of some alkene sulfides. Zhur. ob. khim. 35 no.3:475-479 Mr '65. (MIRA 18:4)

APPROVED FOR RELEASE: 04/03/2001 CIA-RDP86-00513R001756630001-2"

"APPROVED FOR RELEASE: 04/03/2001 CIA-RDP86-00513R001756630001-2

ARISTOV, V.V.; KREMDELEV, F.F.; KREYTER, D.S.; RUSTILOV, L.A.; MABUSHKIN, V.A.; TROFIMOV, N.N., prepod. KREYTER, V.M., prof., retsenzent; AL'BOV, M.N., prof., retsenzent; KOZERENKO, V.N., prof., retsenzent; KRAYNO, S.V., st. prepod., retsenzent; BELYAKOVA, Ye.V., red.

[Manual for laboratory work in the course on prospecting and exploration for mineral deposits] Rukovodstvo dlia prakticheskikh zaniatii po kursu poiskov i razvedki mestorozhdenii poleznykh iskopaemykh. Moskva, Vysshaia shkola, 1965. 253 p. (MIRA 18:9)

APPROVED FOR RELEASE: 04/03/2001 CIA-RDP86-00513R001756630001-2"

"APPROVED FOR RELEASE: 04/03/2001 CIA-RDP86-00513R001756630001-2

RAZUVAYEV, G.A.; ETITS, V.S.; TROFIMOV, N.N.

Chlorination of some olefin oxides by tert-butyl hypochlorite. Zhur. org. khim. 1 no. 12:2128-2131 D 65 (MIRA 19:1)

1. Submitted December 12, 1964.

APPROVED FOR RELEASE: 04/03/2001 CIA-RDP86-00513R001756630001-2"

"APPROVED FOR RELEASE: 04/03/2001 CIA-RDP86-00513R001756630001-2

TROFIMOV, N. N., Cand Geol-Min Sci -- (diss) "Geological structure of the Smirnovskiy ore field and methods of opening up of polymetallic deposits in the Eastern Baikal' region. (From the example of research into deposits of the Smirnovskiy ore field)." Moscow, 1960. 21 pp; (Ministry of Higher and Secondary Specialist Education RSFSR, Moscow Geological Survey Inst im S. Ordzhonikidze); 130 copies; price not given; (KL, 22-60, 133)

APPROVED FOR RELEASE: 04/03/2001 CIA-RDP86-00513R001756630001-2"

"APPROVED FOR RELEASE: 04/03/2001 CIA-RDP86-00513R001756630001-2

TROFIMOV, N.N.

Possibility of using the hydrochemical method of prospecting for complex metal deposits. Trudy MGRI 37:55-59 '61. (MIRA 15:1)
(Transbaikalia--Geochemical prospecting)

APPROVED FOR RELEASE: 04/03/2001 CIA-RDP86-00513R001756630001-2"

"APPROVED FOR RELEASE: 04/03/2001 CIA-RDP86-00513R001756630001-2

TROFIMOV, N.N.; POLYAKOVA, O.P.; MALINOVSKIY, Ye.P.

Lead-zinc deposits of the Smirnovskoye ore field. Trudy IGEM no.83:161-201 '63. (MIRA 16:11)

APPROVED FOR RELEASE: 04/03/2001 CIA-RDP86-00513R001756630001-2"

"APPROVED FOR RELEASE: 04/03/2001 CIA-RDP86-00513R001756630001-2

TROFIMOV, N.N.

Geological characteristics of the Smirnovskoye ore deposit and prerequisites for lead-zinc ore prospecting in this region. Izv. vys. ucheb. zav.; geol. i razv. 1 no.7:101-111 Jl '58. (MIRA 12:8)

1.Moskovskiy geologorazvedochnyy institut im. S. Ordzhonikidze.
(Transbaikalia--Ore deposits)

APPROVED FOR RELEASE: 04/03/2001 CIA-RDP86-00513R001756630001-2"

"APPROVED FOR RELEASE: 04/03/2001 CIA-RDP86-00513R001756630001-2

BOGATYREV, M.F.; TROFIMOV, N.P. (Khabarovsk)

Use of antibiotics in the treatment of suppurative pleurisy. (MIRA 12:11)
Kaz.med.zhur. 40 no.3:81-82 My-Je '59.
(EMPYEMA) (ANTIBIOTICS)

APPROVED FOR RELEASE: 04/03/2001 CIA-RDP86-00513R001756630001-2"

"APPROVED FOR RELEASE: 04/03/2001 CIA-RDP86-00513R001756630001-2

TROFIMOV, Nikolay Pavlovich

N/5
723.11
.T8
1956

Normy Vyrabotki i Oplata Truda V MTS; Spravochnik Dlya Rabotnikov MTS (Norms of Output and Payment of Labor in the Machine Tractor Stations) 3. Izd., Perer. i Dop. Moskva, Sel'Khozgiz, 1956.
143 P. Tables

APPROVED FOR RELEASE: 04/03/2001 CIA-RDP86-00513R001756630001-2"

"APPROVED FOR RELEASE: 04/03/2001 CIA-RDP86-00513R001756630001-2

TROFIMOV, N.P.; GREBTSOV, P.P., redaktor; DANILOVA, I.P., tekhnicheskiy redaktor

[Wages at machine-tractor stations; reference manual for machine-tractor station workers] Oplata truda v mashinno-traktornykh stantsiiakh; spravochnik dlia rabotnikov mashinno-traktornykh stantsii. 2-e izd., ispr. i dop. Moskva, Gos. izd-vo selkhoz. lit-ry, 1954. 118 p. (MLRA 7:11)

(Machine-tractor stations) (Wages)

APPROVED FOR RELEASE: 04/03/2001 CIA-RDP86-00513R001756630001-2"

"APPROVED FOR RELEASE: 04/03/2001 CIA-RDP86-00513R001756630001-2

TROFIMOV, N. P.

Oplata truda v mashino-traktornykh stantsiyakh (Payment for labor in machine tractor stations) Spravochnik Dlya Rabotnikov Mashino-Traktornykh Stantsiy. 2 Izd. Isprav i Dopol. Moskva, Sel'khozgiz, 1954.
118 p. tables.

SO:N/5
762.2
.T8
1954

APPROVED FOR RELEASE: 04/03/2001 CIA-RDP86-00513R001756630001-2"

"APPROVED FOR RELEASE: 04/03/2001 CIA-RDP86-00513R001756630001-2

TROFIMOV, N.P.; AREF'YEVA, S.A.; KOMAROVA, T.A.; LITVINENKO, T.G.; SEMOV, V.A.; SKOSYREVA, N.A.; SHCHERBAKOV, N.P.; FEDOROV, P.I., otv.red.; SAYTANIDI, L.D., tekhn.red.

[Wages on state farms; a collection of materials on wages and work norms for state farms] Oplata truda v sovkhozakh; sbornik materialov po oplate truda i normam vyrabotki v sovkhozakh. Moskva, Izd-vo M-va sel'.khoz.RSFSR, 1960. 380 p. (MIRA 13:5)

1. Russia (1917- R.S.F.S.R.) Ministerstvo sel'skogo khozyaystva. Upravleniye organizatsii truda i zarabotnoy platy. 2. Upravleniye organizatsii truda i zarabotnoy platy Ministerstva sel'skogo khozyaystva (for all except Fedorov, Saytanidi).
(Wages) (State farms)

APPROVED FOR RELEASE: 04/03/2001 CIA-RDP86-00513R001756630001-2"

"APPROVED FOR RELEASE: 04/03/2001 CIA-RDP86-00513R001756630001-2

TROFIMOV, N.S.

Spreading of the initiative of A. Satirova in the shoe factories. Kozh.-obuv.prom. 6 no.10:8-10 O '64. (MIRA 18:1)

1. Glavnyy ekonomist Kostromskogo kozhevenno-obuvnogo proizvodstvennogo ob'yedineniya "X Oktyabr'".

APPROVED FOR RELEASE: 04/03/2001 CIA-RDP86-00513R001756630001-2"

"APPROVED FOR RELEASE: 04/03/2001 CIA-RDP86-00513R001756630001-2

TROFIMOV, N.T., inzh.

Using precast reinforced concrete copings in constructing conduit galleries of navigation locks. Energ. stroi. no.2:61-66 '59 (MIRA 13:3)

1. Institut "Orgenergostroy."
(Concrete slabs) (Locks (Hydraulic engineering))

APPROVED FOR RELEASE: 04/03/2001 CIA-RDP86-00513R001756630001-2"

"APPROVED FOR RELEASE: 04/03/2001 CIA-RDP86-00513R001756630001-2

TROFIMOV, N.T., inzh.

Assembly of joint tongues in the construction of locks at the Lenin Volga Hydroelectric Power Station. Energ. stroi. no.3: 52-57 (13), 1960. (MIRA 14:9)

1. Institut "Orgenergostroy".
(Volga Hydroelectric Power Station--Locks (Hydraulic engineering))

APPROVED FOR RELEASE: 04/03/2001 CIA-RDP86-00513R001756630001-2"

"APPROVED FOR RELEASE: 04/03/2001 CIA-RDP86-00513R001756630001-2

L 06138-67 EWT(1)/EWT(m)/EWP(t)/ETI IJP(c) AT/JD

ACC NR: AP6031172 SOURCE CODE: UR/0361/66/000/002/0076/0078

AUTHOR: Korsunskiy, M. I.; Trofimov, O. A.; Garger, K. S.; Daukeyev, D. K.

ORG: none

TITLE: Concerning the spectral distribution of anomalous photoconductivity of amorphous selenium in the near ultraviolet

SOURCE: AN KazSSR. Izvestiya. Seriya fiziko-matematicheskikh nauk, no. 2, 1966, 76-78

TOPIC TAGS: spectral distribution, photoconductivity, selenium, UV spectrum, electron trapping

ABSTRACT: The dependence of the anomalous photoconductivity σ on wavelength in films of amorphous selenium is measured. The conductivity of samples is lower for blue light than for red even though selenium is more absorptive in the blue. This property is not predicted by the phenomenological theory based on the hypothesis of long-lived trapping centers. A recent model of long-lived trapping centers in the form of a colloidal dispersion of an alloy in amorphous selenium predicts a positive sign of the derivative $\frac{d\sigma}{d\lambda}$ in the visible region. Also a short wavelength minimum is predicted, indicating a minus sign for $\frac{d\sigma}{d\lambda}$ in the near ultraviolet. These predictions are experimentally veri-

Card 1/2

APPROVED FOR RELEASE: 04/03/2001 CIA-RDP86-00513R001756630001-2"

"APPROVED FOR RELEASE: 04/03/2001 CIA-RDP86-00513R001756630001-2

L 06138-67

ACC NR: AP6031172

fied. Orig. art. has: 1 formula, 1 table, 1 figure.

SUB CODE: 20/ SUBM DATE: 23Apr65/ ORIG REF: 006

Card 2/2 mje

APPROVED FOR RELEASE: 04/03/2001 CIA-RDP86-00513R001756630001-2"