"APPROVED FOR RELEASE: 03/14/2001 CIA-RDP86-00513R001756710004-0

TROFIMOV, V.V.

Tasks of public health agencies of the Russian Federation in further development of antituberculosis measures in the Republic. Probl. tub. 41 no.10:3-12 '63. (MIRA 17:9)

1. Ministr zdravookhraneniya RSFSR.

APPROVED FOR RELEASE: 03/14/2001 CIA-RDP86-00513R001756710004-0"

"APPROVED FOR RELEASE: 03/14/2001 CIA-RDP86-00513R001756710004-0

TROEIMOV, V.V.

Status of the public health service of the R.S.F.S.R. and the tasks of its agencies for the next few years. Zdrav. Ros. Feder. 7 no.11:3-10 N'63 (MIRA 16:11)

1. Ministr zdravookhraneniya RSFSR.

*

APPROVED FOR RELEASE: 03/14/2001 CIA-RDP86-00513R001756710004-0"

"APPROVED FOR RELEASE: 03/14/2001 CIA-RDP86-00513R001756710004-0

TROFIMOV, V.V.

Irrigation

Problem of determining the irrigative capacity of an unregulated river flow. Gidr. i mel. 4, no. 5, 1952.

9. Monthly List of Russian Accessions, Library of Congress, SEPTEMBER 1952 ~~1953~~, Uncl.

APPROVED FOR RELEASE: 03/14/2001 CIA-RDP86-00513R001756710004-0"

"APPROVED FOR RELEASE: 03/14/2001 CIA-RDP86-00513R001756710004-0

KROPIMOV, V.V.

Strengthen the role of ship services and maintenance and operation bases in improving technical operations in the river fleet. Mech. transp.16 no.7:3-9 Jl '57. (MIRA 10:9)

1. Glavnyy inzhener Volzhskogo ob'yedinennogo parokhodstva.
(Inland water transportation) (Ships--Maintenance and repair)

APPROVED FOR RELEASE: 03/14/2001 CIA-RDP86-00513R001756710004-0"

"APPROVED FOR RELEASE: 03/14/2001 CIA-RDP86-00513R001756710004-0

TROFIMOV, V.V.

22

CA

Stavropol crude oil. G. P. Grigor'ev and V. V. Trofimov. *Neftyanoe Khoz.* 1939, No. 1, 22-5.—Stavropol crude oil is high in resin and S, sp. gr. 0.8816, E_{20} viscosity 1.51, pour point below −21°, A. P. flash point below 0°. It contains resins 34.0, asphaltenes 2.40, silica-gel resins 14.4, mechanical admixts. traces, coke 4.85, S 2.58 (bomb), paraffin wax 3.08%, water traces, and acidity 0.896 mg. KOH. It is composed of gasoline 17.8, kerosene 15.3, light gas oil 6.9, oil fractions 35.2 and heavy bottoms 23.6%.

A. A. Bochtlingk

ASM-SLA METALLURGICAL LITERATURE CLASSIFICATION

APPROVED FOR RELEASE: 03/14/2001 CIA-RDP86-00513R001756710004-0"

"APPROVED FOR RELEASE: 03/14/2001 CIA-RDP86-00513R001756710004-0

TROFIMOV, V. V.

Trofimov, V. V.

"The complex processing of emulsion petroleums in the operations of the 'Kuybyshevneft' (Kuybyshev Petroleum) Association." Min Petroleum Industry USSR. State All-Union Research and Design Inst ("Giprovostokneft'"). Kuybyshev, 1956. (Dissertation for the Degree of Technical Sciences).

Knizhnaya letopis'
No. 21, 1956. Moscow.

APPROVED FOR RELEASE: 03/14/2001 CIA-RDP86-00513R001756710004-0"

"APPROVED FOR RELEASE: 03/14/2001 CIA-RDP86-00513R001756710004-0

TROFIMOV, V.V.

Complete breakdown of oil emulsions. Trudy Giprovostoknefti no.1:344-352 '58. (MIRA 13:9)
(Emulsions)

APPROVED FOR RELEASE: 03/14/2001 CIA-RDP86-00513R001756710004-0"

"APPROVED FOR RELEASE: 03/14/2001 CIA-RDP86-00513R001756710004-0

KHUTELEV, I.K., inzhener; TROFIMOV, V.V., inzhener

Production quality control at the "Azovstal'" plant. Stal' 15 no.9:821-823 S'55. (MIRA 8:12)

1. Zavod "Azovstal'"

(Zhdanovo--Steel industry--Quality control)

APPROVED FOR RELEASE: 03/14/2001 CIA-RDP86-00513R001756710004-0"

"APPROVED FOR RELEASE: 03/14/2001 CIA-RDP86-00513R001756710004-0

TROFIMOV, V.V.

TROFIMOV, V.V., inzhener.

Work practices of the heat inspectors in the Department of Technical Inspection of the "Azovstal'" plant. Metallurg no.6:26-28 Je '56. (MIRA 9:9)

1. Otdel tekhnicheskogo kontrolya zavoda "Azovstal'".
(Railroads--Rails--Quality control)(Zhdanov--Metallurgical plants)

APPROVED FOR RELEASE: 03/14/2001 CIA-RDP86-00513R001756710004-0"

"APPROVED FOR RELEASE: 03/14/2001 CIA-RDP86-00513R001756710004-0

APPROVED FOR RELEASE: 03/14/2001 CIA-RDP86-00513R001756710004-0"

"APPROVED FOR RELEASE: 03/14/2001 CIA-RDP86-00513R001756710004-0

TROFIMOV, Valerian Vasil'yevich; VALOV, N.A., redaktor izdatel'stva; EVENSON, I.M., tekhnicheskiy redaktor

[Supervisor of the technical control division of a rolling mill; a textbook fro the instruction of technical workers] Kontroler OTK prokatnogo tsekha; uchebnoe posobie dlia proizvodstvenno-tekhnicheskogo obucheniia rabochikh. Moskva, Gos. nauchno-tekhn. izd-vo lit-ry po chernoi i tsvetnoi metallurgii, 1956. 166 p. (MLRA 10:2)
(Rolling mills--Quality control)

APPROVED FOR RELEASE: 03/14/2001 CIA-RDP86-00513R001756710004-0"

"APPROVED FOR RELEASE: 03/14/2001 CIA-RDP86-00513R001756710004-0

240

AUTHOR: Trofimov, V.V., Engineer OTK at the Azovstal Works,

TITLE: Thermal insulation of the skids in continuous furnaces. (Teploizolyatsiya glissazhnykh trub metodicheskikh pechey.)

PERIODICAL: "Metallurg" (Metallurgist), 1957, No. 1, pp. 27 - 28, (U.S.S.R.)

ABSTRACT: Fireclay blocks (61.76% SiO_2; 34.18% Al_2O_3; 2.61% Fe_2O_3; 0.73% CaO; 0.4% MgO) have been successfully used for heat insulation over the skid pipes in continuous furnaces. Since the introduction of this thermal insulation gas consumption has been reduced by 5.5 million m^3 per month for two furnaces, the previous monthly consumption by three furnaces being 31 million m^3. Different methods of securing the blocks are now being tried out, but it is already clear that the life of tubes protected by fireclay blocks is greatly extended.
3 figures (sketches).

APPROVED FOR RELEASE: 03/14/2001 CIA-RDP86-00513R001756710004-0"

"APPROVED FOR RELEASE: 03/14/2001 CIA-RDP86-00513R001756710004-0

TROFIMOV, V.V., inzh. (g. Zhdanov).

Rails must be treated carefully. Put' i put. khoz. no.2:32 F '58. (MIRA 11:3)

1. Zavod "Azovstal'."

(Railroads--Rails)

APPROVED FOR RELEASE: 03/14/2001 CIA-RDP86-00513R001756710004-0"

"APPROVED FOR RELEASE: 03/14/2001 CIA-RDP86-00513R001756710004-0

SOV/130-58-8-13/18

AUTHOR: Trofimov, V.V.

TITLE: Mechanical Manipulation of Rails (Mekhanicheskaya kantovka rel'sov)

PERIODICAL: Metallurg, 1958, Nr 8, pp 29 - 31 (USSR)

ABSTRACT: While the "Azovstal'" Works were producing type R-43 rails (12.5 m long) manual handling was still possible but with the introduction of 25-m long rails and type R-50, R-65 and R-75 heavy rails, mechanisation was adopted. The author describes the mechanised handling at various points. For handling hot rails, F.V. Popenko of the technical-control department proposed a simple and original design of manipulator (Figure 1) of the springboard type. Mechanisation here has given an annual saving of 100 000 roubles, has enabled hotter (700 - 750 °C) rails to be handled and has eliminated the deformation of rails through twisting. For handling rails after the straightening machine (roller type) a device (Figure 2) suitable for all types and lengths of rail, proposed by I.A. Fabrikant has been adopted. It is operated by compressed air. At the punching press the rails are handled by a reliable and convenient circular manipulator (Figure 3); the productivity

Card 1/2

APPROVED FOR RELEASE: 03/14/2001 CIA-RDP86-00513R001756710004-0"

"APPROVED FOR RELEASE: 03/14/2001 CIA-RDP86-00513R001756710004-0

Mechanical Manipulation of Rails SOV/130-58-8-13/18

of the press provided with the manipulator is 450 and over 25-mm long R-50 rails per shift when other equipment in the line is in co-ordination with it.
There are 3 figures.

ASSOCIATION: OTK of the Zavod "Azovstal'" ("Azovstal'" Works)

1. Metals--Handling 2. Industrial plants--Equipment

Card 2/2

APPROVED FOR RELEASE: 03/14/2001 CIA-RDP86-00513R001756710004-0"

"APPROVED FOR RELEASE: 03/14/2001 CIA-RDP86-00513R001756710004-0

DYUBIN, Nikolay Petrovich; TROFIMOV, Valerian Vasil'yevich; TIKHOVSKIY, V.A., prof., otv.red.; LIBERMAN, S.S., red.izd-va; ANDREYEV, S.P., tekhn.red.

[Quality of rails] Kachestvo rel'sov. Khar'kov, Gos.nauchno-tekhn.izd-vo lit-ry po chernoi i tsvetnoi metallurgii, 1959. 203 p. (MIRA 12:4)

(Railroads--Rails)

APPROVED FOR RELEASE: 03/14/2001 CIA-RDP86-00513R001756710004-0"

"APPROVED FOR RELEASE: 03/14/2001 CIA-RDP86-00513R001756710004-0

DYUBIN, N.P.; DYUBINA, A.V.; SVIRIDENKO, F.F.; KARPUNIN, A.M.; Prinimali uchastiye: LEVCHENKO, N.D.; POPOVA, N.N.; TROFIMOV, V.V.; SHUBENKO, G.L.; CHETVERIKOV, A.V.; RYABININ, N.G.; ZEMLYANSKAYA, L.I.; FRADINA, M.G.; ORGIYAN, V.S.; SABUTSKIY, F.M.; MOMGELI, A.V.; BUL'SKIY, M.T.; FRADIN, M.D.; VALENKO, N.S.; KUCHERYAVYY, Yu.P.; CHEPELEV, P.M.; SABUROV, T.A.; POLYAKOV, P.M.; MALASHENKO, R.B.

Effect of the temperature of rail rolling on their quality. Sbor. trud. UNIIM no.11:344-353 '65. (MIRA 18:11)

APPROVED FOR RELEASE: 03/14/2001 CIA-RDP86-00513R001756710004-0"

"APPROVED FOR RELEASE: 03/14/2001 CIA-RDP86-00513R001756710004-0

TROFIMOV, V.Ye., gornyy inzh.

Develop the rich ores of the Kursk Magnetic Anomaly more rapidly.
Gor. zhur. no.5:8-11 My '63. (MIRA 16:5)
(Kursk magnetic anomaly--Iron mines and mining)

APPROVED FOR RELEASE: 03/14/2001 CIA-RDP86-00513R001756710004-0"

"APPROVED FOR RELEASE: 03/14/2001 CIA-RDP86-00513R001756710004-0

TROFIMOV, Ya.I., starshiy elektromekhanik

Shortcomings in the new communications apparatus should be eliminated. Avtom., telem.i sviaz' 6 no.4:41 Ap '62. (MIRA 15:4)

1. Moskovsko-Rizhskaya distantsiya signalizatsii i svyazi Moskovskoy dorogi.
(Railroads--Communication systems)

APPROVED FOR RELEASE: 03/14/2001 CIA-RDP86-00513R001756710004-0"

"APPROVED FOR RELEASE: 03/14/2001 CIA-RDP86-00513R001756710004-0

TROFIMOV, Ya.I.

Eliminate the shortcomings of KMSS-6 and UKSS-3 commutators. Avtom., telem. i sviaz' no.10:34 O '60. (MIRA 13:10)

1. Starshiy elektromekhanik Moskovsko-Rizhskoy distanstii signalizatsii i svyazi Moskovskoy dorogi.
(Railroads--Electric equipment)
(Electric switchgear)

APPROVED FOR RELEASE: 03/14/2001 CIA-RDP86-00513R001756710004-0"

"APPROVED FOR RELEASE: 03/14/2001 CIA-RDP86-00513R001756710004-0

TROFIMOV, Ya.N., arkhitektor; NAUMOV, S.F., kand. arkhitektury, nauchnyy red.; KONDRATENKO, N.G., red.izd-va; SHEVCHENKO, T.N., tekhn. red.

[Apartment houses and standard buildings serving cultural and public needs in foreign countries built with modern structural elements and materials.] Akademiia stroitel'stva i arkhitektury SSSR. TSentral'nyi institut nauchnoi informatsii po stroitel'stvu i arkhitekture. [Zhilye i massovye kul'turno-bytovye zdaniia s primeneniem progressivnykh konstruktsii i materialov v zarubezhnom stroitel'stve. Moskva, Gosstroiizdat, 1963. 104p. (Its Oyt zarubezhnogo stroitel'stva, no. 10). (MIRA 16:11)

APPROVED FOR RELEASE: 03/14/2001 CIA-RDP86-00513R001756710004-0"

"APPROVED FOR RELEASE: 03/14/2001 CIA-RDP86-00513R001756710004-0

VASIL'YEV, K.V.; TROFIMOV, Ya.N.

Restoration of old architectural monuments in Moscow. Gor. khoz.Mosk. 33 no.11:15-17 N '59. (MIRA 13:2)

1. Direktor Moskovskoy nauchno-restavratsionnoy proizvodstvennoy masterskoy (for Vasil'yev). 2. Glavnyy arkhitektor Moskovskoy nauchno-restavratsionnoy proizvodstvennog masterskoy (for Trofimov).
(Moscow--Architecture--Conservation and restoration)

APPROVED FOR RELEASE: 03/14/2001 CIA-RDP86-00513R001756710004-0"

"APPROVED FOR RELEASE: 03/14/2001 CIA-RDP86-00513R001756710004-0

NAUMOV, S.F., kand. arkhitektury; NIKOLAYEVA, N.A., inzh.; TROFIMOV, Ya.N., arkhitekt

[Residential and public buildings; experience of the foreign construction industries] Zhilye i obshchestvennye zdaniia; opyt zarubezhnogo stroitel'stva. Moskva, Izd-vo lit-ry po stroit., 1965. 246 p. (MIRA 18:7)

1. Akademiya stroitel'stva i arkhitektury SSSR. TSentral'nyy institut nauchnoy informatsii po stroitel'stvu i arkhitekture.

APPROVED FOR RELEASE: 03/14/2001 CIA-RDP86-00513R001756710004-0"

"APPROVED FOR RELEASE: 03/14/2001 CIA-RDP86-00513R001756710004-0

TROFIMOV, Ya. Ya. and ZARINSKIY, V. A.

"Problems of Detecting Bromide and Iodide in Mineral Water," Agitator's Notebook, No. 3, 1951, and Journal of Analytical Chemistry, Vol. 6, No. 1.

APPROVED FOR RELEASE: 03/14/2001 CIA-RDP86-00513R001756710004-0"

"APPROVED FOR RELEASE: 03/14/2001 CIA-RDP86-00513R001756710004-0

Sov/85-58-8-15/40

AUTHOR: Trofimov, Ye., Master of Sports (Odessa)

TITLE: Parachute With Adjustable Slot (Parashyut s shchel'yu peremennogo secheniya)

PERIODICAL: Kryl'ya rodiny, 1958, Nr 8, pp 10-11 (USSR)

ABSTRACT: The author states that slotted parachutes have in recent years achieved wide popularity because of their easy control and greater maneuverability. The slotted opening of the canopy must, however, be adjustable, so that it can be closed. Such a parachute was made at the Odesskiy aviatsionnoy-sportivnyy klub (Odessa Aviation Sports Club) and was tested with satisfactory results. Many USSR sportsmen have since been using this parachute. The author gives a detailed description of the parachute with a variable section, claiming that the design produced at the Odessa Aviation Sports Club is superior to others. There are 2 figures.

ASSOCIATION: Odesskiy aviatsionnoy-sportivnyy klub (Odessa Aviation Sports Club)

Card 1/1

APPROVED FOR RELEASE: 03/14/2001 CIA-RDP86-00513R001756710004-0"

"APPROVED FOR RELEASE: 03/14/2001 CIA-RDP86-00513R001756710004-0

TROFIMOV, Ye.A.

Burning of generator gas in the furnaces of PST-1-200 wood distillation systems. Gidroliz. i lesokhim. prom. 17 no.7:11-12 '64. (MIRA 17:11)

1. Severnyy nauchno-issledovatel'skiy institut promyshlennosti.

APPROVED FOR RELEASE: 03/14/2001 CIA-RDP86-00513R001756710004-0"

"APPROVED FOR RELEASE: 03/14/2001 CIA-RDP86-00513R001756710004-0

TROFIMOV, Ye., master sports (Odessa)

Parachute with a slit of varying size. Kryl. rod. 9 no. 8:10-11 Ag '58. (MIRA 11:8)

(Parachutes)

APPROVED FOR RELEASE: 03/14/2001 CIA-RDP86-00513R001756710004-0"

"APPROVED FOR RELEASE: 03/14/2001 CIA-RDP86-00513R001756710004-0

TROFIMOV, Ye., master sporta.

Parachute jump into the sea. Kryl.rod. 7 no.8:6-7 Ag '56. (MLRA 9:12)
(Parachutists)

APPROVED FOR RELEASE: 03/14/2001 CIA-RDP86-00513R001756710004-0"

"APPROVED FOR RELEASE: 03/14/2001 CIA-RDP86-00513R001756710004-0

TROFIMOV, Ye.

TROFIMOV, Ye., leytenant.

Methods of target designation. Voen.vest. 34 no.10:77 O '54. (MIRA 10:10)

(Shooting, Military)

APPROVED FOR RELEASE: 03/14/2001 CIA-RDP86-00513R001756710004-0"

"APPROVED FOR RELEASE: 03/14/2001 CIA-RDP86-00513R001756710004-0

TROFIMOV, Ye.

"International commercial arbitration." Vols. 1 and 2. Reviewed by E. Trofimov. Vnesh. torg. 42 no.4:42-43 '62. (MIRA 15:4)
(Arbitration, International)

APPROVED FOR RELEASE: 03/14/2001 CIA-RDP86-00513R001756710004-0"

"APPROVED FOR RELEASE: 03/14/2001 CIA-RDP86-00513R001756710004-0

TROFIMOV, Ye.N., inah.

Defects in the ONK-B sprayer-duster and their elimination. Zashch. rast.ot vred. i bol. no.4:44 Ap '62. (MIRA 15:12)
(Spraying and dusting equipment—Maintenance and repair)

APPROVED FOR RELEASE: 03/14/2001 CIA-RDP86-00513R001756710004-0"

"APPROVED FOR RELEASE: 03/14/2001 CIA-RDP86-00513R001756710004-0

84260

24.5200 11.9200
10.4100 2207 2307 2615

S/170/60/003/010/005/023
B019/B054

AUTHOR: Trofimov, Ye. P.

TITLE: The Problem of the Unsteady Temperature Field of an Infinite Hollow Cylinder

PERIODICAL: Inzhenerno-fizicheskiy zhurnal, 1960, Vol. 3, No. 10, pp. 47 - 53

TEXT: The author investigates an infinite hollow cylinder with given initial temperature distribution f(r). Heat convection through the outer and inner surface is assumed to be $q_1(\tau)$ and $q_2(\tau)$, respectively. The author tries to determine the temperature field on the premise that the physical parameters of the cylinder material are independent of temperature. For this purpose, he proceeds from the differential equation $\partial t(r,\tau)/\partial\tau = (a/r)\partial/\partial r[r\partial t(r,\tau)/\partial r]$ (1) for given boundary and initial conditions (2) - (4). The variable r is eliminated by means of a Hankel transform. First, the author derives expression (14) for the kernel M(pr) of the transform, and the integral transform is found to be:

Card 1/2

APPROVED FOR RELEASE: 03/14/2001 CIA-RDP86-00513R001756710004-0"

"APPROVED FOR RELEASE: 03/14/2001 CIA-RDP86-00513R001756710004-0

84260

The Problem of the Unsteady Temperature Field of an Infinite Hollow Cylinder

S/170/60/003/010/005/023
B019/B054

$H[t(r,\tau)] = T(p\tau) = \int_{R_1}^{R_2} t(r,\tau)M(pr)rdr$ (15). This formula permits the expansion of $t(r,\tau)$ in a series with respect to the orthogonal functions $M(pr)$. For this purpose, it is necessary to convert the differential equation (1) into the form $\partial T(p,\tau)/\partial\tau = a[F(p,\tau) + p^2T(p,\tau)]$ (18), whose solution is $T(p,\tau) = \left\{a\int_0^\tau F(p,\vartheta)e^{-ap^2\vartheta}d\vartheta + H[f(r)]\right\}e^{ap^2\tau}$. From this solution, the mentioned series expansion of $t(r,\tau)$ can be obtained by inversion: (21). The rather extensive expression (26) for $t(r,\tau)$ is then obtained by passing over from the modified Bessel functions used for the expansion to the ordinary Bessel functions. Finally, the author discusses an example, and gives its solution. There are 5 Soviet references.

ASSOCIATION: Institut teplofiziki AN SSSR, Sibirskoye otdeleniye (Institute of Heat Physics of the AS USSR, Siberian Branch)

SUBMITTED: April 25, 1960

Card 2/2

APPROVED FOR RELEASE: 03/14/2001 CIA-RDP86-00513R001756710004-0"

"APPROVED FOR RELEASE: 03/14/2001 CIA-RDP86-00513R001756710004-0

TROFIMOV, Yo.P.

Temperature field of an infinite hollow rotation cylinder. Inzh.-fizik. zhur. 6 no.7:83-87 Jl '63. (MIRA 16:9)

1. Institut neftekhimicheskoy i gazovoy promyshlennosti imeni I. M.Gubkina, Moskva.

(Temperature fields) (Rotating bodies)

APPROVED FOR RELEASE: 03/14/2001 CIA-RDP86-00513R001756710004-0"

"APPROVED FOR RELEASE: 03/14/2001 CIA-RDP86-00513R001756710004-0

TROFIMOV, Ye.V.

Replacement of sleeve bearings with oil lubrication by bearings with water lubrication. Prom.energ. 15 no.6:15-16 Je '60. (MIRA 13:7)

(Bearings (Machinery))
(Lubrication and lubricants)

APPROVED FOR RELEASE: 03/14/2001 CIA-RDP86-00513R001756710004-0"

"APPROVED FOR RELEASE: 03/14/2001 CIA-RDP86-00513R001756710004-0

TROFIMOV, Ye.V., inzhener; DUMOV, V.I., inzhener.

Determination of cavitation with the aid of brittle coatings. Energomashinostroenie no.1:25-26 O '55. (MLRA 9:5)
(Cavitation) (Lacquer and lacquering)

APPROVED FOR RELEASE: 03/14/2001 CIA-RDP86-00513R001756710004-0"

"APPROVED FOR RELEASE: 03/14/2001 CIA-RDP86-00513R001756710004-0

84990

S/094/60/000/006/002/005
E073/E335

26.2141

AUTHOR: Trofimov, Ye.V.

TITLE: Substitution of Slide Bearings with Oil Lubrication by Water-lubricated Bearings

PERIODICAL: Promyshlennaya energetika, 1960, No. 6, pp. 15-16

TEXT: The author proposed a design of slide and thrust bearings in which the hydrodynamic and the hydrostatic lifting forces are used simultaneously. In the same way as for an ordinary hydrodynamic thrust bearing (3, figure) there are segments with obliquely cut facets. During rotation of the thrust disc a hydrodynamic lifting force will form. In contrast to a hydrodynamic thrust bearing, throttling fillets 4 with throttling holes 5 are provided through which liquid under pressure is fed in. As the gap decreases the pressure under the thrust disc increases and a hydrostatic lifting force is created. Under normal operating conditions the hydrostatic and the hydrodynamic lifting forces are additive. Application of such bearings in the turbo pump type ПТ-35-309 (PT-35-309) enabled reducing by a factor of 2 the dimensions and the weight of this unit as compared with the pump

Card 1/2

APPROVED FOR RELEASE: 03/14/2001 CIA-RDP86-00513R001756710004-0"

"APPROVED FOR RELEASE: 03/14/2001 CIA-RDP86-00513R001756710004-0

84990
S/094/60/000/006/002/005
E073/E335

Substitution of Slide Bearings with Oil Lubrication by Water-lubricated Bearings

ЭП-30 (EP-30) which has the same characteristics by operates with oil lubrication. The saving in steam amounted to 300 kg/h. The illustration shows the slide thrust bearing with hydrostatic load relief. In this illustration the notations are as follows: 1 - thrust disc; 2 - body of the thrust bearing; 3 - thrust segments with obliquely cut facets; 4 - throttling fillet; 5 - feeding-in hole; 6 - distribution grooves.

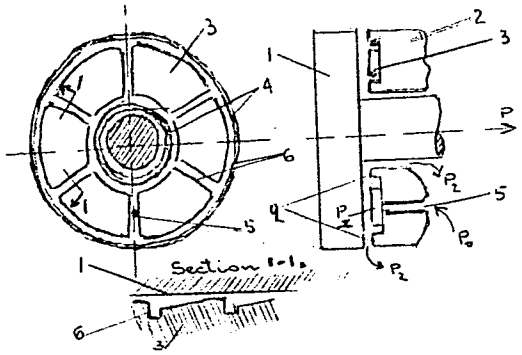

There is 1 figure.
Card 2/2

APPROVED FOR RELEASE: 03/14/2001 CIA-RDP86-00513R001756710004-0"

"APPROVED FOR RELEASE: 03/14/2001 CIA-RDP86-00513R001756710004-0

LAVRUSHIN, Yu.A.; PERMYAKOV, A.I.; TROFIMOV, Yu.M.

Taz interglaciation in Western Siberia. Izv. AN SSSR. Ser. geol. 25 no.7:82-88 Jl '60. (MIRA 13:10)

1. Geologicheskiy institut AN SSSR, Moskva.
(Siberia, Western--Glaciological research)

APPROVED FOR RELEASE: 03/14/2001 CIA-RDP86-00513R001756710004-0"

"APPROVED FOR RELEASE: 03/14/2001 CIA-RDP86-00513R001756710004-0

TROFIMOV, YU N.

48-7-6/21

AUTHORS: Vorob'yev, V.D., Il'in, K.I., Kol'chinskaya, T.I., Latyshev, G.D., Sergeyev, A.G., Trofimov, Yu.N., Fadeyev, V.I.

TITLE: The Spectrum of the Electrons of the Internal Conversion of Active Radium-Containing Thorium Deposits
III(Domain Hρ = 1380 to 2700 and 3500 to 9000 Gs. cm.)
(Spektr elektronov vnutrenney konversii aktivnogo osadka radiotoriya
III(Oblast' Hρ = 1380 do 2700 i 3500 do 9000 Gs. cm) toriya)

PERIODICAL: Izvestiya Akad. Nauk SSSR, Ser. Fiz. , 1957, Vol. 21, Nr 7, pp. 954 - 961 (USSR)

ABSTRACT: 1.) The intensities of the conversion lines. In the determination of the relative intensities of conversion lines the fact was taken into account that a portion of the atoms ThC' falls down from the source due to the α-emission on the decay ThC' $\xrightarrow{\alpha}$ ThC". This circumstance leads to the fact that the intensity of all conversion lines developing on the decay ThC' $\xrightarrow{\beta}$ ThD decrease by 30 % in comparison with the intensity of the lines of other nuclei. Therefore the intensities of all lines which develop in connection with the decay ThC" $\xrightarrow{\beta}$ ThD were determined with regard to the line L which develops in the same decay. The

Card 1/3

APPROVED FOR RELEASE: 03/14/2001 CIA-RDP86-00513R001756710004-0"

"APPROVED FOR RELEASE: 03/14/2001 CIA-RDP86-00513R001756710004-0

48-7-6/21

The Spectrum of the Electrons of the Internal Conversion of Active Radium-Containing Thorium Deposits
III(Domain $H\rho$ = 1380 to 2700 and 3500 to 9000 Gs. cm.)

intensities of the other lines were determined with regard to the I-line ThB → ThC. In order to connect all intensities with each other the relation of the L - and I - line intensities to the source was determined , the latter being covered by a foil in order to prevent a falling down of the emission atoms. Detailed calculations and explanations are given. The authors estimate the accuracy of their measuremtns of the absolute intensities with 5 - 10 % for the intensive lines.

2.)The conversion spectrum in the domain $H\rho$ = 1380 to 2600 Gs.cm

In the study of this portion of the spectrum 3 series of measurements were made. In every series the position and intensities of the lines were determined. The average values of $H\rho$ and of the intensities are given in table 1, as well as the energy of the electrons and of the corresponding γ-transitions, the identification of the lines and comparative values of earlier works. It may be seen that the values obtained by the authors for $H\rho$ and for the intensities differ markedly from earlier obtained values, where a photorecording of the electrons had been employed. Figures 1, 2, 3 and 4 represent some parts of the spectra of

Card 2/3

APPROVED FOR RELEASE: 03/14/2001 CIA-RDP86-00513R001756710004-0"

"APPROVED FOR RELEASE: 03/14/2001 CIA-RDP86-00513R001756710004-0

48-7-6/21

The Spectrum of the Electrons of the Internal Conversion of Active Radium-Containing Thorium Deposits
III(Domain $H\rho$ = 1380 to 2700 and 3500 to 9000 Gs. cm.)

conversion electrons in the domain $H\rho$ = 1380 + 2600 Gs. cm.

3.) The conversion spectrum in the "rigid" domain. Certain lines discovered by the authors are recorded on figures 5, 6 and 7, their energies and intensities on table 2. There are 2 tables, 7 figures and 16 references, 8 of which are Slavic.

ASSOCIATION: Department of Physics, Leningrad Institute of Railroad Transportation Engineers
(Kafedra fiziki Leningradskogo instituta inzhenerov zheleznodorozhnogo transporta)

AVAILABLE: Library of Congress

Card 3/3

APPROVED FOR RELEASE: 03/14/2001 CIA-RDP86-00513R001756710004-0"

"APPROVED FOR RELEASE: 03/14/2001 CIA-RDP86-00513R001756710004-0

TROFIMOV, Yu. N.

56-5-9/46

AUTHORS: Sergeyev, A. G., Krisyuk, E. M., Latyshev, G. D., Trofimov, Yu. N., Remennyy, A. S.

TITLE: The Deday Scheme of $Bi^{212} \longrightarrow Po^{212}$ (Skhema raspada $Bi^{212} \longrightarrow Po^{212}$)

PERIODICAL: Zhurnal Eksperimental'noy i Teoreticheskoy Fiziki, 1957, Vol. 33, Nr 5, pp. 1140-1143 (USSR)

ABSTRACT: The γ conversion spectrum is recorded by means of a semicircle spectrometer and the following γ-lines are found (in KeV):

727,2
785,4
893,4
952,7
1073,7
1078,5
1512,6
1620,4
1800,2

The above lines, except the 1078,5 line, can be classified in a decay scheme in which the following levels (given in KeV) are formed in thePo-212. (Both spin and parity are given in parenthesis):

Card 1/2

APPROVED FOR RELEASE: 03/14/2001 CIA-RDP86-00513R001756710004-0"

"APPROVED FOR RELEASE: 03/14/2001 CIA-RDP86-00513R001756710004-0

The Decay Scheme of $Bi^{212} \longrightarrow Po^{212}$.

56-5-9/46

0	(0+)
727,2	(2+)
1512,6	(0,1,2)
1620,5	(1,2)
1679,9	(0,1,2)
1800,4	(0,1,2)

There are 1 table, 1 figure, and 19 references, 4 of which are Slavic.

ASSOCIATION: Leningrad Institute for Railroad-Transport Engineers (Leningradskiy institut inzhenerov zheleznodorozhnogo transporta)

SUBMITTED: May 29, 1957

AVAILABLE: Library of Congress

Card 2/2

APPROVED FOR RELEASE: 03/14/2001 CIA-RDP86-00513R001756710004-0"

"APPROVED FOR RELEASE: 03/14/2001 CIA-RDP86-00513R001756710004-0

3 (5)

SOV/20-126-4-44/62

AUTHOR: Trofimov, Yu. M.

TITLE: The Seed Flora of the Quaternary Deposits of the Lower Course of the Aldan and the Lena Rivers (Semennyye flory chetvertichnykh otlozheniy nizov'yev Aldana i Leny)

PERIODICAL: Doklady Akademii nauk SSSR, 1959, Vol 126, Nr 4, pp 849 - 852 (USSR)

ABSTRACT: Almost no data are available on the Quaternary flora on the basis of carpological investigations for the vast area of the Yakutskaya ASSR. In Western Siberia the papers by P. A. Nikitin and P. I. Dorofeyev dealt with this problem. The same flora of the North East of the USSR is being investigated by A. P. Vas'kovskiy. In the present paper the attempt is made to investigate the Quaternary flora of the area mentioned in the title on the basis of a carpological analysis, and to compare the results with the fossil pollen of the same deposits. The material was partly collected by the author, partly by M. N. Alekseyev, E. A. Vangengeym, N. P. Kurpina, and I. M. Khoreva; data on pollen analysis are by R. Ye. Giterman. P. I. Dorofeyev (Botanicheskiy institut AN SSSR = Botanical Institute of the AS USSR) gave advice in the determination of the material. Figure

Card 1/3

APPROVED FOR RELEASE: 03/14/2001 CIA-RDP86-00513R001756710004-0"

"APPROVED FOR RELEASE: 03/14/2001 CIA-RDP86-00513R001756710004-0

The Seed Flora of the Quaternary Deposits of the Lower Course of the Aldan and the Lena Rivers SOV/20-126-4-44/62

1 shows schematical cross sections of the 4 exposures investigated. Table 1 gives a list of the types of plants determined a) according to the carpological-, b) according to pollen analysis. The investigation of these floras showed that most of the plants are characteristic of lake-bog areas with rigid climatical conditions. Most probably it was forest tundra which was similar to the recent forest tundra of the lower course of the Lena. There were many small lakes and bogs with grass shores. The higher parts of the area were covered with Betula nana and Salix spp. individual Larix dahurica and Pinus cembra var. The finding of remains of rodents: Lemmus obensis, Dicrostonys (Dicrostomy) torquatus, (Abstracter's note: obviously 2 printing errors in the paper) Ochotona hyperborea confirm the above assumption. Such a climate in the Quaternary period in this area may be explained by an intensive glacification in the Verkhoyan'ye (Upper Jana area). The author agrees with the opinion by P. I. Dorofeyev, according to which the mentioned deposits (II. terrasse) belong to the European Riss or Riss-Wuerm interval (second half of the Middle Pleistocene). The recent flora of the mentioned areas is much more varied than the

Card 2/3

APPROVED FOR RELEASE: 03/14/2001 CIA-RDP86-00513R001756710004-0"

"APPROVED FOR RELEASE: 03/14/2001 CIA-RDP86-00513R001756710004-0

The Seed Flora of the Quaternary Deposits of the Lower Course of the Aldan and the Lena Rivers SOV/20-126-4-44/62

fossil one described, especially with respect to trees and shrubs. This can be due only to climatic changes i.e. due to heating (the perennally frozen ground therefore somewhat receded) as well as to a more intense soil ventilation. This brought about a decrease in the hydrophilic vegetation. The "Aldan" species in the fossilized flora are almost always larger and their seeds are more developed than the residues from the Lena. This might be explained by the geographical position of the two areas. As may be seen, the two methods of analysis applied compensate each other. Only by this way the flora may be completely determined. There are 1 figure and 1 table.

ASSOCIATION: Geologicheskiy institut Akademii nauk SSSR (Geological Institute of the Academy of Sciences, USSR)

PRESENTED: February 28, 1959, by A. L. Yanshin, Academician

SUBMITTED: February 27, 1959

Card 3/3

APPROVED FOR RELEASE: 03/14/2001 CIA-RDP86-00513R001756710004-0"

"APPROVED FOR RELEASE: 03/14/2001 CIA-RDP86-00513R001756710004-0

Trofimova, A

AZOS, S.; AREF'YEV, A.; ARTAMONOV, I.; BABINA, I.; BEREGOVSKIY, V.; BLOZHKO, V.; BRAVERMAN, A.; BYKHOVSKIY, Yu.; VINOGRADOVA, M.; GALANKINA, Ye.; GIL'DENGERSH, F.; GLOBA, T.; GREYVER, N.; GORDON, G.; GUL'DIN, I.; GULYAYEVA, Ye.; GUSHCHINA, I.; DAVYDOVSKAYA, Ye.; DAMSKAYA, G.; DERKACHEV, D.; YEVDOKIMOVA, A.; YEGUNOV, V.; ZABELYSHINSKIY, I.; ZAYDENBERG, B.; AZMOSHNIKOV, I.; ITKINA, S.; KARCHEVSKIY, V.; KLUSHIN, D.; KUVINOV, Ye.; KUZNETSOVA, G.; KURSHAKOV, I.; LAKERNIK, M.; LEYZEROVICH, G.; LISOVSKIY, D.; LOSKUTOV, F.; MALEVSKIY, Yu.; MASLYANITSKIY, I.; MAYANTS, A.; MILLER, L.; MITROFANOV, S.; MIKHAYLOV, A.; MYAKINENKOV, I.; NIKITINA, I.; NOVIN, R.; OGNEV, D.; OL'KHOV, N.; OSIPOVA, T.; OSTRONOV, M.; PAKHOMOVA, G.; PETKER, S.; PLAKSIN, I.; PLETENEVA, N.; POPOV, V.; PRESS, Yu.; PROKOF'YEVA, Ye.; PUCHKOV, S.; REZKOVA, F.; RUMYANTSEV, M.; SAKHAROV, I.; SOBOL', S.; SPIVAKOV, Ya.; STRIGIN, I.; SPIRIDONOVA, V.; TIMKO, Ya.; TITOV, S.; TROITSKIY, A.; TOLOKONNIKOV, K.; TROFIMOVA, A.; FEDOROV, V.; CHIZHIKOV, D.; SHEYN, Ya.; YUKHTANOV, D.

Roman Lazarevich Veller; an obituary. Tsvet. met. 31 no.5:78-79 My '58. (MIRA 11:6)

(Veller, Roman Lazarevich, 1897-1958)

APPROVED FOR RELEASE: 03/14/2001 CIA-RDP86-00513R001756710004-0"

"APPROVED FOR RELEASE: 03/14/2001 CIA-RDP86-00513R001756710004-0

TROFIMOVA, A.

We are using our own bricks in building. Sel'. stroi. 12 no.2:18 F '58. (MIRA 11:2)

1. Nachal'nik Platonovskogo rayonnogo otdela po stroitel'stvu v kolkhozakh Tambovskoy oblasti.
(Platonovka District--Brickmaking)

APPROVED FOR RELEASE: 03/14/2001 CIA-RDP86-00513R001756710004-0"

"APPROVED FOR RELEASE: 03/14/2001 CIA-RDP86-00513R001756710004-0

BAL'SHIN, M.Yu.; TROFIMOVA, A.A.

Sintering under pressure. Porosh. met. 1 no.1:82-91 Ja-F '61. (MIRA 15:5)

1. Institut metallurgii imeni A.A. Baykova AN SSSR.
(Sintering)

APPROVED FOR RELEASE: 03/14/2001 CIA-RDP86-00513R001756710004-0"

"APPROVED FOR RELEASE: 03/14/2001 CIA-RDP86-00513R001756710004-0

BAL'SHIN, M.Yu.; TROFIMOVA, A.A.

Sintering under pressure. Porosh.met. 2 no.1:102-103 Ja-F '62. (MIRA 15:8)
(Sintering)

APPROVED FOR RELEASE: 03/14/2001 CIA-RDP86-00513R001756710004-0"

"APPROVED FOR RELEASE: 03/14/2001 CIA-RDP86-00513R001756710004-0

L 61029-65 EWP(e)/EWT(m)/EWP(t)/EWP(k)/EWP(z)/EWP(b) Pg-4 IJP(c) JD

ACCESSION NR: AR5017423 UR/0137/65/000/006/G030/G030

[illegible] of the structure of powder form sintered materials

TRANSLATION: An investigation was made of the microstructure of samples

APPROVED FOR RELEASE: 03/14/2001 CIA-RDP86-00513R001756710004-0"

"APPROVED FOR RELEASE: 03/14/2001 CIA-RDP86-00513R001756710004-0

of pages the appearance of

APPROVED FOR RELEASE: 03/14/2001 CIA-RDP86-00513R001756710004-0"

"APPROVED FOR RELEASE: 03/14/2001 CIA-RDP86-00513R001756710004-0

BAL'SHIN, M.Yu. (Moskva); TROFIMOVA, A.A. (Moskva)

Effect of loading on the process of isothermal sintering of metal powders. Izv. AN SSSR. Otd. tekh. nauk. Met. i topl. no.6:45-51 N-D '61. (MIRA 14:12)

(Powder metallurgy)

APPROVED FOR RELEASE: 03/14/2001 CIA-RDP86-00513R001756710004-0"

"APPROVED FOR RELEASE: 03/14/2001 CIA-RDP86-00513R001756710004-0

BAL'SHIN, M.Yu.; TROFIMOVA, A.A.

Achieving strength equilibrium during sintering and estimating the degree of equilibrium of the properties of sintered porous materials. Porosh. met. 5 no.8:40-44 Ag '65. (MIRA 18:9)

1. Institut metallurgii imeni Baykova.

APPROVED FOR RELEASE: 03/14/2001 CIA-RDP86-00513R001756710004-0"

"APPROVED FOR RELEASE: 03/14/2001 CIA-RDP86-00513R001756710004-0

1.1600 1521

33801
S/137/62/000/001/052/237
A060/A101

AUTHORS: Bal'shin, M. Yu., Trofimova, A. A.

TITLE: On the problem of sintering under pressure

PERIODICAL: Referativnyy zhurnal, Metallurgiya, no. 1, 1962, 38, abstract 1G286 ("Poroshk. metallurgiya", 1961, no. 1, 82 - 91 [English summary])

TEXT: The investigation of the laws of sintering of freely poured powders with the application of external pressure has some methodological advantages over the usual methods of studying sintering. Experiments were carried out upon powders of Cu, Ni, Fe in graphite and alundum pressing molds (7 mm dia) at temperatures of 500 - 1,000°C at pressures up to 32 kg/cm^2. Just as for the usual sintering, the shrinkage rate is approximately inversely proportional to the sintering time. The kinetics of shrinkage cannot be expressed by a single universal formula, but by a family of formulae. The contraction rate of coarse powders is reduced with the passage of time at a considerably slower rate than that of fine powders. The contraction kinetics of powders with various dispersities are compared. The anomalous behaviour of eddy-current Fe-powder under

Card 1/2

APPROVED FOR RELEASE: 03/14/2001 CIA-RDP86-00513R001756710004-0"

"APPROVED FOR RELEASE: 03/14/2001 CIA-RDP86-00513R001756710004-0

33801

S/137/62/000/001/052/237
A060/A101

On the problem of sintering under pressure

sintering in the α and the γ regions was observed: in the α region the fine powders were sintered more intensively, and in the γ-region - the coarse powders.

R. Andriyevskiy

[Abstracter's note: Complete translation]

Card 2/2

APPROVED FOR RELEASE: 03/14/2001 CIA-RDP86-00513R001756710004-0"

"APPROVED FOR RELEASE: 03/14/2001 CIA-RDP86-00513R001756710004-0

33174

1.1600

S/180/61/000/006/004/020
E021/E135

AUTHORS: Bal'shin, M.Yu., and Trofimova, A.A. (Moscow)

TITLE: The influence of loading on the process of isothermal sintering of metallic powders

PERIODICAL: Akademiya nauk SSSR. Izvestiya. Otdeleniye tekhnicheskikh nauk. Metallurgiya i toplivo, no.6, 1961, 45-51

TEXT: The sintering under pressure of copper, nickel and iron powders was studied using special dilatometric apparatus at pressures of 2 - 64 kg/cm^2 and at various temperatures. The rate of heating was 12 °C/min and the pressure was applied when the required temperature was attained. The pressures were maintained for up to 256 min and changes in dimensions of the samples after 1, 2, 4, 8, 16, 32, 64, 128 and 256 min were measured. Sintering and cooling was carried out in a hydrogen atmosphere. Fig.3 shows the change of density of the powders with sintering time at different pressures. Graph a is for electrolytic copper at 700 °C with curves 1, 2, 3, 4, 5 and 6 corresponding to 2, 4, 8, 16, 32 and 64 kg/cm^2 respectively. Graph б is for carbonyl nickel at 950 °C with curves 1, 2, 3, 4 corresponding to 4, 8, 16 and

Card 1/2

APPROVED FOR RELEASE: 03/14/2001 CIA-RDP86-00513R001756710004-0"

"APPROVED FOR RELEASE: 03/14/2001 CIA-RDP86-00513R001756710004-0

33174

The influence of loading on the ... S/180/61/000/006/004/020
E021/E135

32 kg/cm^2 respectively. This shows that plastic deformation plays an important role in the first few minutes of sintering under pressure. Microphotographs are included showing the plastic deformation of spherical copper powder. After the first few minutes of the process the pressure increases the rate of sintering according to the formula:

$$V_1/V_2 = (p_1/p_2)^n, \quad \text{where} \quad n \geqslant 2$$

where V_1 and V_2 are the rates of densification and p_1 and p_2 are the pressures. The fall in the rate of sintering of powders at a given time decreases with decrease in pressure. Pressure considerably increases the rate of sintering both because of an increase in plastic deformation with pressure, and because of an increase in creep rate. There are 3 figures, 3 tables and 5 references: 4 Soviet-bloc and 1 non-Soviet-bloc. The English language reference reads as follows:

Ref.3: J. Williams. Conference of powder metallurgy. London, 1956. pp. 112-124.

Card 2/2

APPROVED FOR RELEASE: 03/14/2001 CIA-RDP86-00513R001756710004-0"

"APPROVED FOR RELEASE: 03/14/2001 CIA-RDP86-00513R001756710004-0

GADZHIYEVA, S. Sh.; TROFIMOVA, A. G.; SHIKHSAIDOV, A. R.

"Starinnyy zemledel'cheskiy kalendar' narodov Darestana."

report submitted for 7th Intl Cong, Anthropological & Ethnological Sciences, Moscow, 3-10 Aug 64.

APPROVED FOR RELEASE: 03/14/2001 CIA-RDP86-00513R001756710004-0"

"APPROVED FOR RELEASE: 03/14/2001 CIA-RDP86-00513R001756710004-0

SHELYAPINA, T.S.; TROFIMOVA, A.I.; KUROCHKINA, Z.V.

First interprovince conference on scientific and practical work in the control of diphyllobothriasis. Med.paraz.i paraz.bol. 26 no.6:752-754 N-D '59. (MIRA 13:4)
(WORMS, INTESTINAL AND PARASITIC)

APPROVED FOR RELEASE: 03/14/2001 CIA-RDP86-00513R001756710004-0"

"APPROVED FOR RELEASE: 03/14/2001 CIA-RDP86-00513R001756710004-0

TROFIMOVA, A.I.

PHASE I BOOK EXPLOITATION 1123

Leningrad. Vsesoyuznyy institut rasteniyevodstva. Otdel agrometeorologii

Zasukhi v SSSR, ikh proiskhozhdeniye, povtoryayemost' i vliyaniye na urozhay (Droughts in the USSR, Their Origin, Frequency, and Effect on Crops) Leningrad, Gidrometeoizdat, 1958. 206 p. 3,500 copies printed.

Ed. (Title page): Rudenko, A.I., Candidate of Agricultural Sciences; Ed. (Inside book): Ushakova, T.V.; Tech. Ed.: Flaum, M.Ya.

PURPOSE: This book is intended for agrometeorologists of the hydrometeorological service, agronomists on collective and state farms and machine-tractor stations, specialists working in agricultural scientific research institutions, as well as students and teachers in agricultural and hydrometeorological tekhnikums and vuzes.

COVERAGE: This book, a collection of articles by members of the Agrometeorological Division of the All-Union Plant Cultivation Institute, presents contemporary thought on various aspects of drought phenomena. Drought origin and causes, types, frequency of occurence, periodicity, and effect on various

Card 1/4

APPROVED FOR RELEASE: 03/14/2001 CIA-RDP86-00513R001756710004-0"

"APPROVED FOR RELEASE: 03/14/2001 CIA-RDP86-00513R001756710004-0

agricultural crops are discussed. A geographical distribution of drought stricken areas of the USSR is also given. The text is accompanied by maps, diagrams, tables, and bibliographic references.

TABLE OF CONTENTS:

Zhukovskiy, P.M., Director of the All-Union Plant Cultivation Institute. 3
Foreword 5
Selyaninov, G.T. Origin and Dynamics of Droughts 31
Alpat'yev, A.M. and Ivanova, V.N. Characteristics and Geographic Distribution of Droughts 46
Rudenko, A.I. Types of Droughts During the Vegetative Period and Their Characteristics 54
Bessonova, Ye.V. Drought During the Various Periods of Crop Development and its Effect on Yields 71
Rudenko, A.I. Effect of Drought on Potato Yields

APPROVED FOR RELEASE: 03/14/2001 CIA-RDP86-00513R001756710004-0"

"APPROVED FOR RELEASE: 03/14/2001 CIA-RDP86-00513R001756710004-0

Alpat'yev, A.M. and Trofimova, A.I. Drought Frequency in the Virgin and Fallow Lands of Kazakhstan and Western Siberia 94
Shul'ts, G.E. The Dynamics of Phenological Processes in European USSR in Dry Years 101
Malyugin, Ye.A. (Deceased), Smirnov, V.A., Shakhnovich, A.V. Changes in the Local Climate and Moisture Cycles of Cultivated Areas as a Result of Irrigation Conducted to Combat Drought 116
Smirnov, A.V. Notes on Determining the Degree of Susceptibility of an Area to Drought 135
Yakovlev, N.N. Protective Forest Belts as a Factor in Regulating the Transpiration State of Crops 145

Supplements
1. Precipitation Characteristics of Territories Affected by Drought for the Period 1885-1954 162
2. Summary Data Characterizing Major Droughts for the Period 1885-1954 166
3. Frequency of Various Types of Droughts in Different Parts of European USSR (percentages) 172
4. Meteorological Intensity Indices for Various Types of Drought in Different

APPROVED FOR RELEASE: 03/14/2001 CIA-RDP86-00513R001756710004-0"

"APPROVED FOR RELEASE: 03/14/2001 CIA-RDP86-00513R001756710004-0

Droughts in the USSR, Their (Cont.) 1123

Zones of European USSR 173
5. Mean Meteorological Intensity Indices for Different Types of Droughts in European USSR (Data From 18 Meteorological Stations) 174
6. Generalized Table of Basic Phenological Phenomena Based on Geographical Quadrants for European USSR for 1921 175
7. Seasonal Appearance Times of Plant Phenomena and Phenoanomalies for 1921 178
8. Seasonal Appearance Times of Plant Phenomena and Phenoanomalies for 1939 195

AVAILABLE: Library of Congress

MM/mfd
1-23-59

Card 4/4

APPROVED FOR RELEASE: 03/14/2001 CIA-RDP86-00513R001756710004-0"

"APPROVED FOR RELEASE: 03/14/2001 CIA-RDP86-00513R001756710004-0

TROFIMOVA, A.N.

Introduction of Clinelymus sibiricus (L.) Nevski. Trudy Bot. inst.Ser.6 no.7:218-220 '59. (MIRA 13:4)

1. Vsesoyuznyy nauchno-issledovatel'skiy institut kormov im. V.R.Vil'yamsa, Lugovaya.
(Clinelymus)

APPROVED FOR RELEASE: 03/14/2001 CIA-RDP86-00513R001756710004-0"

"APPROVED FOR RELEASE: 03/14/2001 CIA-RDP86-00513R001756710004-0

M

Country : USSR
Category: Cultivated Plants. Fodders.

Abs Jour: RZhBiol., No 22, 1958, No 100326

Author : Trofimova, A.N.
Inst : All-Union Academy of Agricultural Sciences im. V.I. Lenin
Title : The Effect of Simultaneously Maturing Grass Mixture on the Quality of Hay.

Orig Pub: Dokl. VASKHNIL, 1957, No 5, 20-22.

Abstract: Experiments at the All-Union Institute of Forage Crops showed that the new variety of timothy, Pozdnespelaya VIK, is close to late maturing clover in regard to the periods at which it passes through the developmental stages. In the period of bulk harvesting of

Card : 1/3

M-81

APPROVED FOR RELEASE: 03/14/2001 CIA-RDP86-00513R001756710004-0"

"APPROVED FOR RELEASE: 03/14/2001 CIA-RDP86-00513R001756710004-0

M

Country : USSR
Category: Cultivated Plants. Fodders.

Abs Jour: RZhBiol., No 22, 1958, No 100326

the grass blend of red, late maturing clover and late maturing timothy, the yield of protein obtained from 1 hectare is considerably higher than in the same mixture of clover sown with timothy of intermediate maturity. As shown by the calculations, each hectare of the grass mixture with late maturing timothy produces additional 65.6 kilograms of digestible protein. The clover and timothy seeds in such a mixture ripen simultaneously and they can be harvested with a single passage of the combine. A number of kolkhozes and sovkhozes in Moskovskaya,

Card : 2/3

APPROVED FOR RELEASE: 03/14/2001 CIA-RDP86-00513R001756710004-0"

"APPROVED FOR RELEASE: 03/14/2001 CIA-RDP86-00513R001756710004-0

M

Country : USSR
Category: Cultivated Plants. Fodders.

Abs Jour: RZhBiol., No 22, 1958, No 100326

Ivanovskaya and other oblasts are already introducing timothy Pozdnespelaya VIK for production on considerable areas and are securing good results. At Frunze Kolkhoz in Rodnikovskiy Rayon in Ivanovskaya Oblast' this variety of timothy was sown with pink and red clover and on an area of 640 hectares, 55.4 centners/ha of hay were obtained, and on seed plots - 2.2 centners/ha of seeds. -- V.M. Kol'

Card : 3/3

M-82

APPROVED FOR RELEASE: 03/14/2001 CIA-RDP86-00513R001756710004-0"

"APPROVED FOR RELEASE: 03/14/2001 CIA-RDP86-00513R001756710004-0

TROFIMOVA, A.N., kandidat sel'skokhozyaystvennykh nauk.

Effect of the simultaneous ripening of a grass mixture on the quality of hay. Dokl.Akad.sel'khoz.22 no.5:20-22 '57. (MLRA 10:9)

1. Vsesoyuznyy nauchno-issledovatel'skiy institut kormov imeni V.P.Vil'yamsa. Predstavleno akademikom I.V.Yakushkinym.
(Grasses) (Hay)

APPROVED FOR RELEASE: 03/14/2001 CIA-RDP86-00513R001756710004-0"

"APPROVED FOR RELEASE: 03/14/2001 CIA-RDP86-00513R001756710004-0

The development and the respiration of fish eggs at different partial pressures of oxygen. A. N. Trofimova and N. A. Popov. *Uchenye Zapiski Leningrad. Gosudarst. Univ., Ser. Biol.* [5], 3, 335–44 (1937) (German summary). —Salmon and perch eggs can develop normally at a lowered partial pressure of O_2 (for salmon $^1/_2$, for perch $^1/_3$ or normal). A 25% reduction in respiration takes place when the partial pressure of O_2 is reduced 5 times. Normal development of perch eggs is possible although slightly reduced, when the respiration is reduced 25%. The eggs perish when a 50% reduction is reached. Salmon eggs can withstand the reduction of partial pressure only if the CO_2 which reduces the p_H is removed. Twenty-two references. W. R. Henn

ASM-SLA METALLURGICAL LITERATURE CLASSIFICATION

APPROVED FOR RELEASE: 03/14/2001 CIA-RDP86-00513R001756710004-0"

"APPROVED FOR RELEASE: 03/14/2001 CIA-RDP86-00513R001756710004-0

KRYLOVA, Z.A.; TROFIMOVA, A.V.

Transition of acute dysentery into a chronic form in children.
Pediatriia 39 no.3:37-39 My-Je '56. (MLRA 9:9)

1. Iz detskogo otdeleniya Dorozhnoy bol'nitsy st. Kuybyshev (glavnyy vrach P.A.Filekin)
(DYSENTERY, in inf. and child
transition of acute form into chronic)

APPROVED FOR RELEASE: 03/14/2001 CIA-RDP86-00513R001756710004-0"

"APPROVED FOR RELEASE: 03/14/2001 CIA-RDP86-00513R001756710004-0

1ST AND 2ND ORDERS

PROCESSES AND PROPERTIES INDEX

11 C

Importance of citric acid in the metabolism of Aspergillus niger. E. I. Troimova. *Microbiology* (U. S. S. R.) 10, 722-6(1941); *Chem. Zbl.* 1942, II, 2153.—In *A. niger* cultured on citric acid (I) (concn. 2-6%) the utilization coeff. of I decreases as the concn. of I increases. This is also true for glucose. Utilization of I is influenced also by the pH of the medium. A pH of 2.5 is optimal. Simultaneous utilization of I and glucose by the mold considerably increases the utilization coeff. of both substances.

T. Lämes

ASM/SLA METALLURGICAL LITERATURE CLASSIFICATION

APPROVED FOR RELEASE: 03/14/2001 CIA-RDP86-00513R001756710004-0"

"APPROVED FOR RELEASE: 03/14/2001 CIA-RDP86-00513R001756710004-0

1ST AND 2ND ORDERS

3RD AND 4TH ORDERS

PROCESSES AND PROPERTIES INDEX

CA

11C

Activation of the process of citric acid accumulation by surface molds of Aspergillus niger. A. A. Mel'nikova and R. I. Trofimova. *Microbiology* (U. S. S. R.) 9, 358-68 (in English, 369-9)(1940); cf. *C. A.* 32, 6673[9].—For fermentation of the growth medium and subsequently a sugar soln. KNO_3 and NH_4NO_3 were equally good as N sources. $NaNO_3$ was not so good. Molds grown on a medium contg. NH_4NO_3 were most active when a sugar soln. was substituted. Only strain L gave pos. results when NH_4NO_3 (0.2%) was added to the sugar soln., and did not react to the adda. of KNO_3 (0.1%). All other strains showed the reverse relation. Strain Ia was most active on a substrate contg. KNO_3 or KCl, and less active with $Mg(NO_3)_2$ and $NaNO_3$. NH_4Cl and NH_4NO_3 had no effect. Changing the sugar soln. every 4 days during a 12-day period and adda. of 0.1% of KNO_3 to the substrate increased the total yield of citric acid and the amt. of acid per sugar utilized. This procedure did not lower the acid-forming capacity of the surface mold during 30 days of fermentation. All expts. were made at 30-32°. T. L.

ASM-SLA METALLURGICAL LITERATURE CLASSIFICATION

APPROVED FOR RELEASE: 03/14/2001 CIA-RDP86-00513R001756710004-0"

"APPROVED FOR RELEASE: 03/14/2001 CIA-RDP86-00513R001756710004-0

11C

Ca

Participation of acetic and malic acids in the biochemical formation of citric acids. V. S. Budkevich and E. I. Trofimova. *Microbiology* (U. S. S. R.) 7, No. 9-10, 1112-19(1938); *Khim. Referat. Zhur.* 1939, No. 8, 48.—Repeated expts. fail to confirm the conclusions of Chrzasocz and Zakomorny (*C. A.* 30, 8291[1,2]) that the AcOH and malic acids are formed as intermediate products in the biochem. transformation of sugar into citric acid. The slight increase in citric acid on adding acetate and malate to mold nutritive soln. can be explained by the method used for the inoculation of the fungus. W. R. Henn

ASM-SLA METALLURGICAL LITERATURE CLASSIFICATION

APPROVED FOR RELEASE: 03/14/2001 CIA-RDP86-00513R001756710004-0"

"APPROVED FOR RELEASE: 03/14/2001 CIA-RDP86-00513R001756710004-0

1ST AND 2ND ORDERS

PROCESSES AND PROPERTIES INDEX

11

Magnesium as an activator of biochemical conversions. V. S. Butkevich and E. I. Trofimova. *Compt. rend. acad. sci. U. R. S. S.* 17, 221-5(1937)(in English).—Mycelia of *Aspergillus niger* were grown for 2-2.5 days on a nutrient soln., rinsed, placed for 24 hrs. in a soln. of 2.5% $Na_2SO_4.10H_2O$ or of 2.37% $MgSO_4.7H_2O$ and then removed directly into NaOAc or sugar solns. More NaOAc was transformed into oxalic acid and more sugar transformed to citric acid by the mycelia kept in Mg soln. than by those kept in the Na soln. Other expts. confirmed these results and also indicated that the mycelia kept in Mg soln. contained more reducing substances than those kept in the Na soln. No difference in wt. of the mycelia cultures due to addn. of Mg salts was noted. E. Curson

ASM-SLA METALLURGICAL LITERATURE CLASSIFICATION

APPROVED FOR RELEASE: 03/14/2001 CIA-RDP86-00513R001756710004-0"

"APPROVED FOR RELEASE: 03/14/2001 CIA-RDP86-00513R001756710004-0

1ST AND 2ND ORDERS

3RD AND 4TH ORDERS

PROCESSES AND PROPERTIES INDEX

11 C

Magnesium as an activator of biochemical conversions. V. S. Butkevich and E. I. Trofimova. *Compt. rend. acad. sci. U. R. S. S.* 17, 221-3(1937)(in English).—Mycelia of *Aspergillus niger* were grown for 2-2.5 days on a nutrient soln., rinsed, placed for 24 hrs. in a soln. of 2.5% $Na_2SO_4.10H_2O$ or of 2.37% $MgSO_4.7H_2O$ and then removed directly into NaOAc or sugar solns. More NaOAc was transformed into oxalic acid and more sugar transformed to citric acid by the mycelia kept in Mg soln. than by those kept in the Na soln. Other expts. confirmed the results and also indicated that the mycelia kept in Mg soln. contained more reducing substances than those kept in the Na soln. No difference in wt. of the mycelia cultures due to addn. of Mg salts was noted. E. Curson

ASM-SLA METALLURGICAL LITERATURE CLASSIFICATION

APPROVED FOR RELEASE: 03/14/2001 CIA-RDP86-00513R001756710004-0"

"APPROVED FOR RELEASE: 03/14/2001 CIA-RDP86-00513R001756710004-0

PROCESSES AND PROPERTIES INDEX

Participation of acetic and malic acids in the biochemical formation of citric acids. V. S. Budkevich and E. I. Trofimova. *Microbiology* (U. S. S. R.) 7, No. 9-10, 1119-19(1938); *Khim. Referat. Zhur.* 1939, No. 8, 48.—Repeated expts. fail to confirm the conclusions of Chmatacs and Zahoumray (*C. A.* 30, 6201[1]) that the AcOH and malic acids are formed as intermediate products in the biochem. transformation of sugar into citric acid. The slight increase in citric acid on adding acetate and malate to mold nutritive soln. can be explained by the method used for the inoculation of the fungus. W. R. Henn

METALLURGICAL LITERATURE CLASSIFICATION

APPROVED FOR RELEASE: 03/14/2001 CIA-RDP86-00513R001756710004-0"

"APPROVED FOR RELEASE: 03/14/2001 CIA-RDP86-00513R001756710004-0

PROCESSES AND PROPERTIES INDEX

CA

11C

Activation of the process of citric acid accumulation by surface molds of Aspergillus niger. A. A. Mel'nikova and E. I. Tyndanova: *Microbiology* (U. S. S. R.) 9, 558-68 (in English, 569-9)(1940); cf. *C. A.* 32, 6673*.—For fermentation of the growth medium and subsequently a sugar soln. KNO_3 and NH_4NO_3 were equally good as N sources. $NaNO_3$ was not so good. Molds grown on a medium contg. NH_4NO_3 were most active when a sugar soln. was substituted. Only strain L gave pos. results when NH_4NO_3 (0.2%) was added to the sugar soln., and did not react to the addn. of KNO_3 (0.1%). All other strains showed the reverse relation. Strain Ia was most active on a substrate contg. KNO_3 or KCl, and less active with $Mg(NO_3)_2$ and $NaNO_3$. NH_4Cl and NH_4NO_3 had no effect. Changing the sugar soln. every 4 days during a 12-day period and addn. of 0.1% of KNO_3 to the substrate increased the total yield of citric acid and the amt. of acid per sugar utilized. This procedure did not lower the acid-forming capacity of the surface mold during 20 days of fermentation. All expts. were made at 30-32°. T. L.

ASM-SLA METALLURGICAL LITERATURE CLASSIFICATION

APPROVED FOR RELEASE: 03/14/2001 CIA-RDP86-00513R001756710004-0"

"APPROVED FOR RELEASE: 03/14/2001 CIA-RDP86-00513R001756710004-0

C4

Importance of citric acid in the metabolism of Aspergillus niger. B. I. Tsvetnova. *Microbiology* (U. S. S. R.) 10, 135-6(1941); *Chem. Abstr.* 1942, 37, 2155.—In A. niger grown on citric acid (I) (concn. 2-6%) the utilization coeff. of I decreases as the concn. of I increases. This ration coeff. of I decreases as the concn. of I increases. This is also true for glucose. Utilization of I is influenced also by the pH of the medium. A pH of 7.3 is optimal. Simultaneously with the use of I sugar (glucose) by the mold considerably increases the utilization coeff. of both substances. T. Lassen

APPROVED FOR RELEASE: 03/14/2001 CIA-RDP86-00513R001756710004-0"

"APPROVED FOR RELEASE: 03/14/2001 CIA-RDP86-00513R001756710004-0

1ST AND 2ND ORDERS

PROCESSES AND PROPERTIES INDEX

3RD AND 4TH ORDERS

11

Magnesium as an activator of biochemical conversions. V. S. Butkevich and E. I. Trofimova. *Compt. rend. acad. sci. U. R. S. S.* 17, 221-5(1937)(in English).—Mycelia of *Aspergillus niger* were grown for 2-2.5 days on a nutrient soln., rinsed, placed for 24 hrs. in a soln. of 2.5% $Na_2SO_4.10H_2O$ or of 2.37% $MgSO_4.7H_2O$ and then removed directly into NaOAc or sugar solns. More NaOAc was transformed into oxalic acid and more sugar transformed to citric acid by the mycelia kept in Mg soln than by those kept in the Na soln. Other expts. confirmed these results and also indicated that the mycelia kept in Mg soln. contained more reducing substances than those kept in the Na soln. No difference in wt. of the mycelia cultures due to addn. of Mg salts was noted. E. Curzon

COMMON ELEMENTS

COMMON VARIABLES INDEX

MATERIALS INDEX

ASM-SLA METALLURGICAL LITERATURE CLASSIFICATION

APPROVED FOR RELEASE: 03/14/2001 CIA-RDP86-00513R001756710004-0"

"APPROVED FOR RELEASE: 03/14/2001 CIA-RDP86-00513R001756710004-0

1ST AND 2ND ORDERS

PROCESSES AND PROPERTIES INDEX

3RD AND 4TH ORDERS

11C

Ca

Participation of acetic and malic acids in the biochemical formation of citric acids. V. S. Budkevich and R. I. Trofimova. *Microbiology* (U. S. S. R.) 7, No. 9-10, 1112-19(1938); *Khim. Referat. Zhur.* 1939, No. 8, 48.—Repeated expts. fail to confirm the conclusions of Chrzaszcz and Zakomorny (C. A. 30, 8201[6]) that the AcOH and malic acids are formed as intermediate products in the biochem. transformation of sugar into citric acid. The slight increase in citric acid on adding acetate and malate to mold nutritive soln. can be explained by the method used for the inoculation of the fungus. W. R. Henn

COMMON ELEMENTS

MATERIALS INDEX

ASM-SLA METALLURGICAL LITERATURE CLASSIFICATION

APPROVED FOR RELEASE: 03/14/2001 CIA-RDP86-00513R001756710004-0"

"APPROVED FOR RELEASE: 03/14/2001 CIA-RDP86-00513R001756710004-0

1ST AND 2ND ORDERS

PROCESSES AND PROPERTIES INDEX

3RD AND 4TH ORDERS

C-4

11C

Activation of the process of citric acid accumulation by surface molds of Aspergillus niger. A. A. Mel'nikova and E. I. Trofimova. *Microbiology* (U. S. S. R.) 9, 358-68 (in English, 368-9)(1940); cf. C. A. 32, 6673.—For fermentation of the growth medium and subsequently a sugar soln. KNO_3 and NH_4NO_3 were equally good as N sources. $NaNO_3$ was not so good. Molds grown on a medium contg. NH_4NO_3 were most active when a sugar soln. was substituted. Only strain L gave pos. results when NH_4NO_3 (0.2%) was added to the sugar soln., and did not react to the addn. of KNO_3 (0.1%). All other strains showed the reverse relation. Strain Ia was most active on a substrate contg. KNO_3 or KCl, and less active with $Mg(NO_3)_2$ and $NaNO_3$. NH_4Cl and NH_4NO_3 had no effect. Changing the sugar soln. every 4 days during a 12-day period and addn. of 0.1% of KNO_3 to the substrate increased the total yield of citric acid and the amt. of acid per sugar utilized. This procedure did not lower the acid-forming capacity of the surface mold during 20 days of fermentation. All expts. were made at 30-32°. T. L.

ASB-SLA METALLURGICAL LITERATURE CLASSIFICATION

APPROVED FOR RELEASE: 03/14/2001 CIA-RDP86-00513R001756710004-0"

"APPROVED FOR RELEASE: 03/14/2001 CIA-RDP86-00513R001756710004-0

CA

Importance of citric acid in the metabolism of Aspergillus niger. E. I. Trotimova. *Microbiology* (U. S. S. R.) 10, 730-8(1941); *Chem. Zentr.* 1942, II, 2156.—In *A. niger* cultured on citric acid (I) (concn. 2-6%) the utilization coeff. of I decreases as the concn. of I increases. This is also true for glucose. Utilization of I is influenced also by the pH of the medium. A pH of 2.2 is optimal. Simultaneous utilization of I and glucose by the mold considerably increases the utilization coeff. of both substances.

T. Laanes

ASM-SLA METALLURGICAL LITERATURE CLASSIFICATION

APPROVED FOR RELEASE: 03/14/2001 CIA-RDP86-00513R001756710004-0"

"APPROVED FOR RELEASE: 03/14/2001 CIA-RDP86-00513R001756710004-0

1ST AND 2ND ORDERS

PROCESSES AND PROPERTIES INDEX

3RD AND 4TH ORDERS

A-4

BC

Magnesium as an activator of biochemical conversions. V. S. BUTKEVITSCH and E. I. TROFIMOVA (Compt. rend. Acad. Sci. U.R.S.S., 1937, 17, 221—225).—Transference of mycelium of *Aspergillus niger* from the customary nutrient to aq. $MgSO_4$ for 24 hr. increased its subsequent activity in converting sugar into citric acid and acetic into oxalic acid. A. G. P.

COMMON ELEMENTS

OPEN

MATERIALS INDEX

ASM-SLA METALLURGICAL LITERATURE CLASSIFICATION

APPROVED FOR RELEASE: 03/14/2001 CIA-RDP86-00513R001756710004-0"

"APPROVED FOR RELEASE: 03/14/2001 CIA-RDP86-00513R001756710004-0

TROFIMOVA, E.N.

Statistical records of rural therapeutic and disease-preventing organizations. A.I. Trofimov, E.N. Trofimova. Sov. zdrav. 12 no. 4:23-26 Jl-Ag '53.

APPROVED FOR RELEASE: 03/14/2001 CIA-RDP86-00513R001756710004-0"

"APPROVED FOR RELEASE: 03/14/2001 CIA-RDP86-00513R001756710004-0

L 31569-66 EWT(d)/EWT(m)/EWP(w)/EWP(t)/ETI/EWP(k) LJP(c) JD/EM/GD/JH

ACC NR: AT6011760 SOURCE CODE: UR/0000/65/000/000/0059/0073

AUTHOR: Aleksandrov, A. Ya. (Doctor of technical sciences, Professor); Trofimova, E. P.

ORG: none

TITLE: Comparison of the results of the calculation and tests for longitudinal compression of sandwich plates with a honeycomb filler

SOURCE: Raschety elementov aviatsionnykh konstruktsiy, vyp. 3: Trekhsloynyye paneli i obolochki (Calculation of aircraft construction elements, no. 3: Sandwich panels and shells). Moscow, Izd-vo Mashinostroyeniye, 1965, 59-73

TOPIC TAGS: sandwich structure, honeycomb structure, structure panel, shell structure stability, compressive strength

ABSTRACT: This article compares the results of the calculation and tests for longitudinal compression of sandwich structures with hexahedral honeycombs. The external layers of the plate were made of duralumin and steel, and the honeycombs of duralumin and steel foil. Most of In testing, only two edges were loaded, the two edges without loads remained free. the tests showed a loss in the total stability of the panels, and in individual cases a loss in the local stability of the external layers. The parameters of the plates, the results of the calculations, and the results of the tests are presented in detailed tables. The experimental

UDC 629.13.011.1:638.144:539.4

Card 1/2

APPROVED FOR RELEASE: 03/14/2001 CIA-RDP86-00513R001756710004-0"

"APPROVED FOR RELEASE: 03/14/2001 CIA-RDP86-00513R001756710004-0

L 31569-66

ACC NR: AT6011750

part of the work (excluding the tests of plastic samples) was performed by R. I. Rokityanskiy and Yu. A. Kalachev. Orig. art. has: 3 tables, 14 figures, and 11 formulas.

SUB CODE: 13 / SUBM DATE: 25Oct65 / ORIG REF: 004

Card 2/2

APPROVED FOR RELEASE: 03/14/2001 CIA-RDP86-00513R001756710004-0"

"APPROVED FOR RELEASE: 03/14/2001 CIA-RDP86-00513R001756710004-0

TROFIMOVA, E.P.

PHASE I BOOK EXPLOITATION SOV/4441

Voprosy rascheta elementov aviatsionnykh konstruktsiy; raschet trekhsloynykh paneley i obolochek, sbornik statey, no. 2 (Problems in Calculating Aircraft Construction Elements; Calculation of Sandwich Panels and Shells, Collection of Articles, No. 2) Moscow, Oborongiz, 1959. 135 p. Errata slip inserted. 1,900 copies printed.

Eds.: A. Ya. Aleksandrov, Doctor of Technical Sciences, Professor, and L.M. Kurshin, Candidate of Technical Sciences; Managing Ed.: A.S. Zaymovskaya, Engineer; Ed. of Publishing House: P.B. Morozova, Tech. Ed.: V.I. Oreshkina.

PURPOSE: This book is intended for engineers, designers, scientific workers and students.

COVERAGE: The book is a collection of 10 articles dealing with theoretical and experimental investigation of the strength of sandwich constructions with light-weight fillers of the foamed-plastic type and rigid fillers of the corrugated and honeycomb type. The articles discuss the general rigidity of sandwich plates and cylindrical shells during longitudinal compression; simultaneous bending, compression and shear of plates; local rigidity; problems in the determination

Card 1/3

APPROVED FOR RELEASE: 03/14/2001 CIA-RDP86-00513R001756710004-0"

"APPROVED FOR RELEASE: 03/14/2001 CIA-RDP86-00513R001756710004-0

of reduced elastic parameters of honeycomb fillers; and the selection of optimum parameters for plates. No personalities are mentioned. There are no references.

TABLE OF CONTENTS:

Aleksandrov, A.Ya., and E.P. Trofimova. Determination of Reduced Elastic Parameters of Honeycomb Fillers in Sandwich Panels 3

Aleksandrov, A.Ya., G.S. Savvina, and G.M. Talanova. Local Rigidity of Sandwich Plates With Corrugate-Type Fillers Subjected to Compression 27

Kurshin, L.M. Rigidity of Cylindrical Sandwich Shells Beyond the Elastic Limit 43

Bryukker, L.E. Bending of Sandwich Bars by Concentrated and Distributed Loads 52

Bryukker, L.E. and E.P. Trofimova. Calculation of Sandwich Plates Subjected to Simultaneous Action of Transverse Load, Compression and Shear 81

Bryukker, L.E. Longitudinal and Transverse Bending of a Plate with Rigid Filler 94

APPROVED FOR RELEASE: 03/14/2001 CIA-RDP86-00513R001756710004-0"

"APPROVED FOR RELEASE: 03/14/2001 CIA-RDP86-00513R001756710004-0

Bryukker, L.E. Approximate Solutions of Some Problems in the Longitudinal and Transverse Bending of Sandwich Plates With Rigid Orthotropic Fillers 98

Aleksandrov, A.Ya., and L.M. Kurshin. Compression of an Underpropped Plate 114

Aleksandrov, A.Ya. L.M. Kurshin and A.P. Prusakov. On the Selection of Parameters for Sandwich Plates With Lightweight Fillers Subjected to Compression 125

Aleksandrov, A.Ya., and L.E. Bryukker. Results of Tests of Rectangular Sandwich Plates for Longitudinal Compression 131

AVAILABLE: Library of Congress

AC/rn/gmp
10-27-60

APPROVED FOR RELEASE: 03/14/2001 CIA-RDP86-00513R001756710004-0"

"APPROVED FOR RELEASE: 03/14/2001 CIA-RDP86-00513R001756710004-0

ALEKSANDROV, A.Ya.; TROFIMOVA, E.P.

Determining reduced elastic parameters of honeycomb fillers for sandwich panels. Vop.rasch.elem.aviats.konstr. no.2:3-26 '59. (MIRA 13:6)

(Elastic plates and shells)

APPROVED FOR RELEASE: 03/14/2001 CIA-RDP86-00513R001756710004-0"

"APPROVED FOR RELEASE: 03/14/2001 CIA-RDP86-00513R001756710004-0

BRYUKKER, L.E.; TROFIMOVA, E.P.

Design of sandwich plates subjected to simultaneous action of lateral loads, compression, and shear stress. Vop.rasch.elem. aviats.konstr. no.2:81-93 '59. (MIRA 13:6)
(Elastic plates and shells)

APPROVED FOR RELEASE: 03/14/2001 CIA-RDP86-00513R001756710004-0"

"APPROVED FOR RELEASE: 03/14/2001 CIA-RDP86-00513R001756710004-0

BARKALOV, I.M.; GOL'DANSKIY, V.I.; YENIKOLOPYAN, N.S.; TEREKHOVA, S.F.; TROFIMOVA, G.M.

Radiation-induced polymerization in the solid phase. Part 1: Polymerization of acrylonitrite. Vysokom. soed. 6 no.1: 92-97 Ja'64.

Radiation-induced polymerization in the solid phase. Part 2: Polymerization of vinyl acetate. Variations of the temperature dependence of the polymerization note. Ibid.:98-102. (MIRA 17:5)

1. Institut khimicheskoy fiziki AN SSSR.

APPROVED FOR RELEASE: 03/14/2001 CIA-RDP86-00513R001756710004-0"

"APPROVED FOR RELEASE: 03/14/2001 CIA-RDP86-00513R001756710004-0

TROFIMOVA, G.M.; BARKALOV, I.M.; KUZ'MINA, S.S.; GOL'DANSKIY, V.I.; YENIKOLOPYAN, N.S.

Radiation-induced polymerization of hexamethylcyclotrisiloxane in the solid phase. Dokl. AN SSSR 161 no.4:882-885 Ap '65. (MIRA 18:5)

1. Institut khimicheskoy fiziki AN SSSR. 2. Chlen-korrespondent AN SSSR (for Gol'danskiy).

APPROVED FOR RELEASE: 03/14/2001 CIA-RDP86-00513R001756710004-0"

"APPROVED FOR RELEASE: 03/14/2001 CIA-RDP86-00513R001756710004-0

PRUT, E.V.; TROFIMOVA, G.M.; YENIKOLOPYAN, N.S.

Cationic polymerization of hexamethylcyclotrisiloxane in the solid phase. Vysokom. soed. 6 no.11:2102-2103 N '64 (MIRA 18:2)

APPROVED FOR RELEASE: 03/14/2001 CIA-RDP86-00513R001756710004-0"

"APPROVED FOR RELEASE: 03/14/2001 CIA-RDP86-00513R001756710004-0

EWA(h)/T/EWA(1) Pc-4/Pr-4/Pab/

Bankaloy

APPROVED FOR RELEASE: 03/14/2001 CIA-RDP86-00513R001756710004-0"

"APPROVED FOR RELEASE: 03/14/2001 CIA-RDP86-00513R001756710004-0

OTHER:

APPROVED FOR RELEASE: 03/14/2001 CIA-RDP86-00513R001756710004-0"

"APPROVED FOR RELEASE: 03/14/2001 CIA-RDP86-00513R001756710004-0

42706

S/020/62/147/002/016/021
B101/B186

15 1020

AUTHORS: Barkalov, I. M., Gol'danskiy, V. I., Corresponding Member AS USSR, Yenikolopov, N. S., Terekhova, S. F., Trofimova, G.M.

TITLE: Peculiarities of solid-phase radiation polymerization during irradiation

PERIODICAL: Akademiya nauk SSSR. Doklady, v. 147, no. 2, 1962, 395-398

TEXT: To eliminate the aftereffects liable to falsify the results when the solid-phase irradiated monomer is analyzed after thawing, the radiation polymerization of acrylonitrile (AN) and of vinyl acetate (VA) was studied in an apparatus whereby thermal effects and e.p.r. signals during and after irradiation with 1.6-Mev electrons at -196 to 0°C could be recorded simultaneously. Details of procedure and analysis will be published separately (Vysokomolek. soyed., now printing). Results: With AN, the polymerization was limited below - 140°C (4% polymer yield at -196°C). After repeated irradiation with 8 Mrad in each case, thawing and freezing the sample intermediately, the polymerization limit increased proportionally with the number of irradiations. At -196°C, the molecular weight dropped

Card 1/3

APPROVED FOR RELEASE: 03/14/2001 CIA-RDP86-00513R001756710004-0"

"APPROVED FOR RELEASE: 03/14/2001 CIA-RDP86-00513R001756710004-0

with increasing dose (8-20 Mrad) from $\approx 3.5 \cdot 10^5$ to $\approx 7 \cdot 10^4$. Afterpolymerization occurred at -140, -120, and -90°C, but not at lower temperatures. At -90°C, the molecular weight then rose to $\approx 10^6$ within 10 hrs. The activation energy of afterpolymerization was equal to that for liquid-phase polymerization: ≈ 3 kcal/mole. The e.p.r. signals of AN remained unchanged during and after irradiation. The heat of fusion of AN samples irradiated at low temperatures remained constant within the errors of measurement: 35 ± 1 cal/g. The polymerization of AN thus proceeds at $t^o < -140°C$ completely in solid phase, whereas slight, slow aftereffects occur at $t^o > -140°C$. The polymerization of VA was not limited. The rate of polymerization of glassy VA was one order of magnitude higher than that of crystalline VA. The molecular weight of glassy VA (at -150°C) decreased with increasing dose from $3 \cdot 10^4$ to $7 \cdot 10^3$. The molecular weight of crystalline VA was only a fraction of that of glassy VA. Afterpolymerization did not occur. When irradiated VA was thawed, the e.p.r. signal disappeared at -129°C, the point of phase transition from glassy to crystalline state. The loss of heat in the phase transition (34 ± 1 cal/g) and the heat absorption (33 ± 2 cal/g) in melting were recorded thermographically. Thus, the polymerization of VA also occurred in

APPROVED FOR RELEASE: 03/14/2001 CIA-RDP86-00513R001756710004-0"