"APPROVED FOR RELEASE: 08/31/2001 CIA-RDP86-00513R001757320001-5

TSYMBAL, Aleksandr Vasil'yevich

N/5
755.741
.T8

ORGANIZATSIYA DVIZHENIYA NA ZHELEZNODOROZHNOM TRANSPORTE UGOL'NOY PROMYSHLENNOSTI (ORGANIZATION OF TRANSPORT TRAFFIC IN THE COAL INDUSTRY) MOSKVA, UGLETEKHIZDAT, 1956. 382 p. ILLUS., DIAGRS., MAP, TABLES. "LITERATURA": p. 378.

APPROVED FOR RELEASE: 08/31/2001 CIA-RDP86-00513R001757320001-5"

"APPROVED FOR RELEASE: 08/31/2001 CIA-RDP86-00513R001757320001-5

TSYMBAL, B., assistent

Electromechanical system of remote control of marine power plants. Mor. flot 21 no.4:27-29 Ap '61. (MIRA 14:4)

1. Odesskiy institut inzhenerov morskogo flota.
(Electricity on ships) (Remote control)

APPROVED FOR RELEASE: 08/31/2001 CIA-RDP86-00513R001757320001-5"

"APPROVED FOR RELEASE: 08/31/2001 CIA-RDP86-00513R001757320001-5

TSYMBAL, B.I., inzh.

Experimental study of a pneumohydraulic system of remote control for marine diesels. Sudostroenie 26 no.2:56-61 (208) Feb '60. (MIRA 14:11)

(Remote control)
(Marine diesel engines)

APPROVED FOR RELEASE: 08/31/2001 CIA-RDP86-00513R001757320001-5"

"APPROVED FOR RELEASE: 08/31/2001 CIA-RDP86-00513R001757320001-5

ACC NR: AT7002851 (N) SOURCE CODE: UR/3239/66/000/003/0041/0046

AUTHOR: Tsymbal, B. I.

ORG: none

TITLE: On the regulation of air pressure in pneumatic remote control systems for marine diesels

SOURCE: Nikolayev. Korablestroitel'nyy institut. Sudostroyeniye i morskiye sooruzheniya, no. 3, 1966. Sudovyye energeticheskiye ustanovki (ship power equipment), 41-46

TOPIC TAGS: remote control system, gas pressure, pressure distribution, pressure regulator, pressure measurement, ship, pneumatic control system, diesel engine, engine control system / Taman' SDGP motor ship

ABSTRACT: The differential equation for the change of the regulating air pressure in a pneumatic remote control system for marine diesels was analyzed. Since the command for an increase is generated on the fed side of the controller and the decrease signal is taken from the delivery side, the pressure changes for the two conditions are detrimentally different. The air pressure for both—increasing and decreasing rates—was studied in two stages: 1) during the repositioning of the control lever; 2) during the transient process while the system is reaching equilibrium after the control lever is

Card 1/2

APPROVED FOR RELEASE: 08/31/2001 CIA-RDP86-00513R001757320001-5"

"APPROVED FOR RELEASE: 08/31/2001 CIA-RDP86-00513R001757320001-5

ACC NR: AT7002851

set. Families of curves were analyzed for various system parameters and rates of control lever repositioning. The system parameters affect only the initial pressure changes. With increasing rates, the air pressure rises in direct proportion to the rate of change of the control lever. Reducing the rate for repositioning the control lever by four increases the command processing by 75%. With a decrease control signal, reduced control lever repositioning rates lead to linear changes in the pressure. The analytical study was verified by comparing its results with measurements made on such a system aboard the motor ship "Taman'" SDGP. Except for initial bursts with rapid control lever changes, the results were in good agreement. Orig. art. has: 4 figures and 5 formulas.

SUB CODE: 13, 21/ SUBM DATE: none/ ORIG REF: 002

Card 2/2

APPROVED FOR RELEASE: 08/31/2001 CIA-RDP86-00513R001757320001-5"

"APPROVED FOR RELEASE: 08/31/2001 CIA-RDP86-00513R001757320001-5

ACC NR: AP6027629 (N) SOURCE CODE: UR/0145/66/000/006/0090/0095

AUTHOR: Tsymbal, B. I. (Lecturer)

ORG: None

TITLE: Investigation of the major transient conditions of a ship with pneumohydraulic remote control

SOURCE: IVUZ. Mashinostroyeniye, no. 6, 1966, 90-95

TOPIC TAGS: marine engineering, remote control system, pneumatic control system, ship, diesel engine

ABSTRACT: A method is proposed for calculating the maneuvering capabilities of vessels with reversible main diesel engines which are remotely controlled by a pneumohydraulic system. Transient motions of the vessel during reversing maneuvers are considered since this is the most complex case. The resultant relationships may be used for analyzing other maneuvers: starting, slowing down and transition from one set of operating conditions to another without changing direction. It is found that the speed of the remote control system has a considerable effect on the maneuvering characteristics of the vessel which are dependent to a great degree on the law of change in the velocity of the ship at the start of the transition process (especially at high initial velocities). The proposed method and theoretical equations were verified by special full-scale tests of "Taman'" SDGP diesel ships equipped with pneumohydraulic remote

Card 1/2 UDC: 629.12

APPROVED FOR RELEASE: 08/31/2001 CIA-RDP86-00513R001757320001-5"

"APPROVED FOR RELEASE: 08/31/2001 CIA-RDP86-00513R001757320001-5

L 07973-67
ACC NR: AP6027629

control systems. Curves are given for the angular velocity of the screw and the velocity of the vessel as functions of time for transition from "full speed ahead" to "dead stop", and from "full speed ahead" to "full speed astern". A comparison with the theoretical curves for these same maneuvers shows satisfactory agreement. The article was presented for publication by Doctor of technical sciences, Professor V. V. Lakhanin, Odessa Institute of Naval Engineers. Orig. art. has: 3 figures, 7 formulas.

SUB CODE: 13/ 21/ SUBM DATE: 10Jun65/ ORIG REF: 003

Card 2/2

APPROVED FOR RELEASE: 08/31/2001 CIA-RDP86-00513R001757320001-5"

"APPROVED FOR RELEASE: 08/31/2001 CIA-RDP86-00513R001757320001-5

TSYMBAL, D., polkovnik

We should eliminate all shortcomings in the work of stores for military personnel. Komm.Vooruzh.Sil 2 no.13:58 Jl '62. (MIRA 15:7)

(Russia--Army--Military life) (Retail trade)

APPROVED FOR RELEASE: 08/31/2001 CIA-RDP86-00513R001757320001-5"

"APPROVED FOR RELEASE: 08/31/2001 CIA-RDP86-00513R001757320001-5

SIDOROV, M., polkovnik; TSYMBAL, D., polkovnik

Education of activists should be the main consideration of party committees. Komm.Vooruzh.Sil 1 no.18:45-49 S '61. (MIRA 14:9)
(Russia--Air force--Political acitvity)

APPROVED FOR RELEASE: 08/31/2001 CIA-RDP86-00513R001757320001-5"

"APPROVED FOR RELEASE: 08/31/2001 CIA-RDP86-00513R001757320001-5

1ST AND 2ND ORDERS

PROCESSES AND PROPERTIES INDEX

3RD AND 4TH ORDERS

18

CH

Production of a finely dispersed alumina suitable for polishing. K. E. Manolov and F. L. Tsymbal. *Legkie Metal.* 6, No. 10, 8-15(1937); *Chimie & industrie* 40, 1102.—Carbonation of concd. alk. solns. of aluminates (over 200 g. Al_2O_3 per l.) under definite conditions produces a fine, fairly uniform ppt. of hydrated Al_2O_3, which on heating at 1300° is converted into homogeneous, anhyd. Al_2O_3, consisting mainly of the α-modification. This product is suitable for the polishing of metals and alloys and for the finishing of varnishes, for which purposes it is markedly superior to ordinary com. Al_2O_3. A. P.-C.

ASM-SLA METALLURGICAL LITERATURE CLASSIFICATION

APPROVED FOR RELEASE: 08/31/2001 CIA-RDP86-00513R001757320001-5"

"APPROVED FOR RELEASE: 08/31/2001 CIA-RDP86-00513R001757320001-5

The conditions for extensive decomposition of porous bauxite masses in diffusion batteries. K. B. Manolov and F. I. Tsymbal. *Tsvetnye Met.* 13, No. 9, 97–104 (1938); *Chem. Zentr.* 1939, I, 4102.—A study was made to det. the best arrangement (parallel, series or a combination) of the diffusers in diffusion batteries for the soln. of aluminate with water. A combined series and parallel arrangement was found to be best. With the proper arrangement it was possible to obtain very concd. aluminate solns. (450 g./l.) with 87–9% extn. The influence of temp. and of various impurities (CaO, FeO, SiO_2) on the properties of the aluminate obtained is discussed. The most satisfactory temp. is about 1200°. M. G. M.

ASM-SLA METALLURGICAL LITERATURE CLASSIFICATION

APPROVED FOR RELEASE: 08/31/2001 CIA-RDP86-00513R001757320001-5"

"APPROVED FOR RELEASE: 08/31/2001 CIA-RDP86-00513R001757320001-5

19

CA

Abrasive powder. F. I. Tsymbal. Russ. 53,233, May 31, 1938. $Al(OH)_3$ is treated with a soln. of NH_4F and heated to 1300°.

ASM-SLA METALLURGICAL LITERATURE CLASSIFICATION

APPROVED FOR RELEASE: 08/31/2001 CIA-RDP86-00513R001757320001-5"

"APPROVED FOR RELEASE: 08/31/2001 CIA-RDP86-00513R001757320001-5

19

Ca

Finely dispersed corundum. K. E. Manoilov and P. I. Tsymbal. Russ. 53,602, Aug. 31, 1938. A concd. soln. of aluminate is carbonated at a temp. not over 50° to ppt. not more than 85% of the Al in the form of hydroxide and this is filtered off, washed and heated.

ASM-SLA METALLURGICAL LITERATURE CLASSIFICATION

APPROVED FOR RELEASE: 08/31/2001 CIA-RDP86-00513R001757320001-5"

"APPROVED FOR RELEASE: 08/31/2001 CIA-RDP86-00513R001757320001-5

SMIRNOV, M.N.; TSYMBAL, F.I.

Investigating the crystallization process of sodium aluminate from thickened liquors in the Bayer process of alumina production. TSvet. met. 35 no.1:59-66 Ja '62. (MIRA 16:7)
(Aluminum--Metallurgy)

APPROVED FOR RELEASE: 08/31/2001 CIA-RDP86-00513R001757320001-5"

"APPROVED FOR RELEASE: 08/31/2001 CIA-RDP86-00513R001757320001-5

BEL'GOL'SKIY, B.P.; STAROSEL'SKIY, A.L.; LIKHORADOV, A.P.; TSYMBAL, F.Ye., master rel'sobalochnogo stana; BURTSEV, A.F., master rel'sobalochnogo stana.

[Rapid changing of rollers in a rolling mill] Skorostnaia perevalka valkov prokatnogo stana; opyt raboty masterov rel'sobalochnogo stana F.E.TSymbala i A.F.Burtseva. Khar'kov Gos. nauchno-tekhn. izd-vo lit-ry po chernoi i tsvetnoi metallurgii, 1953. 63 p. (MLRA 7:5)
(Rolls (Iron mills))

APPROVED FOR RELEASE: 08/31/2001 CIA-RDP86-00513R001757320001-5"

"APPROVED FOR RELEASE: 08/31/2001 CIA-RDP86-00513R001757320001-5

TSYMBAL, G., nauchnyy sotrudnik

Seven-hour workday. Obshchestv.pit. no.12:10-11 D '60. (MIRA 13:12)

1. Nauchno-issledovatel'skiy institut torgovli i obshchestvennogo pitaniya.
(Moscow--Restaurants, Lunchrooms, etc.) (Hours of labor)

APPROVED FOR RELEASE: 08/31/2001 CIA-RDP86-00513R001757320001-5"

"APPROVED FOR RELEASE: 08/31/2001 CIA-RDP86-00513R001757320001-5

TSYMBAL, G.

For better classification of fixed capital in commerce. Sov. torg. no.10:49-50 O '58. (MIRA 11:10)
(Industrial equipment)

APPROVED FOR RELEASE: 08/31/2001 CIA-RDP86-00513R001757320001-5"

"APPROVED FOR RELEASE: 08/31/2001 CIA-RDP86-00513R001757320001-5

KOROLEV, F.K.; TSYMBAL, I.L.

Modernizing multiple-position swivel table of semiautomatic machine-tool units. Stan.i instr. 31 no.12:24-25 D '60. (MIRA 13:11)
(Machine tools)

APPROVED FOR RELEASE: 08/31/2001 CIA-RDP86-00513R001757320001-5"

"APPROVED FOR RELEASE: 08/31/2001 CIA-RDP86-00513R001757320001-5

PRILEZHAYEVA, Ye.N.; TSYMBAL, L.V.; SHOSTAKOVSKIY, M.F.

Addition of diethyldithiophosphoric acid to vinylaryl sulfides and vinyl ethers. Izv.AN SSSR.Otd.khim.nauk no.9:1679-1681 S '62. (MIRA 15:10)

1. Institut organicheskoy khimii im. N.D.Zelinskogo AN SSSR.
(Phosphorodithoic acid) (Sulfides) (Ethers)

APPROVED FOR RELEASE: 08/31/2001 CIA-RDP86-00513R001757320001-5"

"APPROVED FOR RELEASE: 08/31/2001 CIA-RDP86-00513R001757320001-5

10

CA

Sulfonation of indole and its homologs. A. P. Terent'ev and L. V. Tsymbal (Lomonosov State Univ., Moscow). *Compt. rend. acad. sci. U.R.S.S.* 55, 833-5(1947); cf. *C.A.* 41, 2033c.—The Ba salt of *1-indolesulfonic acid* (I) was prepd. by shaking a finely divided aq. suspension of 1 g. indole (II) with 8 g. $Ba(OH)_2$ and 4 g. $C_6H_4N\text{-}SO_3$ in an ice bath 1.5 hrs. The excess $Ba(OH)_2$ was pptd. with CO_2 and removed by filtration. The filtrate was concd. to a small vol. in the const. presence of NH_3 and 1 g. I was pptd. with excess EtOH. Its constitution was proven by analysis and the hydrolysis of I to II. The yield of the Ba salt of *2-indolesulfonic acid* was improved to practically quant. by sulfonation of II with a 2- or 3-molar excess of $C_6H_4N\text{-}SO_3$ at 120–40° (sealed tube). Its constitution was proven by showing that sulfonation takes place in skatole but not in 2-methylindole. The prepn. of $C_6H_4N\text{-}SO_3$ is described.

W. S. Port

ASM-SLA METALLURGICAL LITERATURE CLASSIFICATION

APPROVED FOR RELEASE: 08/31/2001 CIA-RDP86-00513R001757320001-5"

"APPROVED FOR RELEASE: 08/31/2001 CIA-RDP86-00513R001757320001-5

Apr49

TSYMBAL, L. V.

USSR/Chemistry - Indole
Sulfonation

"Sulfonating and Sulfo Acids of Acidophobic Compounds: IV, Sulfonating Indole and Its Homologues," A. P. Terent'yev,, S. K. Golubova, L. V. Tsymbal, Lab of Org Chem, Moscow State U, 3 pp

"Zhur Obshch Khim" Vol XIX, No 4

Sulfonated indole and skatole by heating to 120° with pyridinesulfotrioxide, and obtained barium salts as well as indolsulfonic- (2) acid and 2-methylindolsulfonic-(2) acid. 2-Methylindole is not sulfonated even at 170°. Processing the indole in a water medium in the presence of baryta produced the salt of indolsulfonic-(1) acid, which was readily hydrolyzable in an alkaline solution. Submitted 3 Nov 47.

PA 65/49T36

APPROVED FOR RELEASE: 08/31/2001 CIA-RDP86-00513R001757320001-5"

"APPROVED FOR RELEASE: 08/31/2001 CIA-RDP86-00513R001757320001-5

APPROVED FOR RELEASE: 08/31/2001 CIA-RDP86-00513R001757320001-5"

"APPROVED FOR RELEASE: 08/31/2001 CIA-RDP86-00513R001757320001-5

TSYMBAL, L.V.

F

USSR/Chemistry of High Molecular Substances.

Abs Jour: Ref Zhur - Khimiya, No. 8, 1957, 27084.

Author : Shestakovskiy, M.F.; Prilezhayeva, Ye. N.; Tsymbal, L.V.

Inst :

Title : To The Question of Synthesis and Conversions of Vinyl Ethers of Higher Polyatomic Alcohols and Cellulose. II. Vinyl Ethers on Cellulose Base.

Orig Pub: Zh. obshch. khimii, 1956, 26, No. 3, 739 - 745.

Abstract: The conditions of extension of the vinylization reaction of Favorskiy and Shestakovskiy on cellulose were studied. The possibility of the synthesis of vinyl ethers of cellulose at the interaction of alkaline cellulose with acetylene (10 to 15-fold excess of acetylene) in dioxane medium at 130 to 150° in 5 hours' time

Card 1/2

APPROVED FOR RELEASE: 08/31/2001 CIA-RDP86-00513R001757320001-5"

"APPROVED FOR RELEASE: 08/31/2001 CIA-RDP86-00513R001757320001-5

GUR'YANOVA, Ye.N.; GOL'DSHTEYN, I.P.; PRILEZHAYEV, Ye.N.; TSYMBAL, L.V.

Structure of some α, β -unsaturated sulfur compounds based on data provided by dipole moments. Izv. AN SSSR. Otd.khim.nauk no.5:810-812 My '62. (MIRA 15:6)

1. Fiziko-khimicheskiy institut im. L. Ya. Karpova i Institut organicheskoy khimii im. N.D.Zelinskogo AN SSSR.
(Sulfur organic compounds—Dipole moments)

APPROVED FOR RELEASE: 08/31/2001 CIA-RDP86-00513R001757320001-5"

"APPROVED FOR RELEASE: 08/31/2001 CIA-RDP86-00513R001757320001-5

PRILEZHAYEVA, Ye.N.; TSYMBAL, L.V.; SHOSTAKOVSKIY, M.F.

Sulfoxides and sulfones. Part 2: Stereochemistry of the addition of thiols to triple bonds of diacetylene and 1-alkyl-1-thiobuten-3-ynes and properties of isomeric 1,4-dialkylsulfonyl-1,3-butadienes. Zhur.ob.khim. 31 no.8:2487-2496 Ag '61. (MIRA 14:8)

1. Institut organicheskoy khimii im. N.D. Zelinskogo Akademii nauk SSSR.
(Butadiyne) (Butenyne) (Butadiene)

APPROVED FOR RELEASE: 08/31/2001 CIA-RDP86-00513R001757320001-5"

"APPROVED FOR RELEASE: 08/31/2001 CIA-RDP86-00513R001757320001-5

SHOSTAKOVSKIY, M.F.; PRILEZHAYEVA, Ye.N.; TSYMBAL, L.V.; TOLCHINSKAYA, R.Ya.; STAROVA, N.G.

Sulfones and sulfoxides. Part 3: Comparative reactivity of α,β-unsaturated sulfoxides and sulfones to nucleophilic reagents. Zhur.ob.khim. 31 no.8:2496-2503 Ag '61. (MIRA 14:8)

1. Institut organicheskoy khimii im. N.D.Zelinskogo AN SSSR.
(Sulfoxide) (Sulfone)

APPROVED FOR RELEASE: 08/31/2001 CIA-RDP86-00513R001757320001-5"

"APPROVED FOR RELEASE: 08/31/2001 CIA-RDP86-00513R001757320001-5

PRILEZHAYEVA, Ye.N.; TSYMBAL, L.V.; SHOSTAKOVSKIY, M.F.

Comparative dienophile reactivity in the vinyl sulfide - vinyl sulfoxide - vinyl sulfone series. Dokl.AN SSSR 138 no.5:1122-1125 Je '61. (MIRA 14:6)

1. Institut organicheskoy khimii im. N.D.Zelinskogo AN SSSR.
2. Chlen-korrespondent AN SSSR (for Shostakovskiy).
(Dienophiles) (Vinyl compounds)

APPROVED FOR RELEASE: 08/31/2001 CIA-RDP86-00513R001757320001-5"

"APPROVED FOR RELEASE: 08/31/2001 CIA-RDP86-00513R001757320001-5

3/079/60/030/009/022/022/XX
B001/B066

AUTHORS: Shostakovskiy, M. F., Prilezhayava, Ye. N., Tsymbal, L. [illegible] and Stolyarova, L. G.

TITLE: Stereochemistry of Addition Reactions to the Triple Bond

PERIODICAL: Zhurnal obshchey khimii, 1960, Vol. 30, No. 9, pp. 3143 - 3144

TEXT: There are no data available in publications on the stereochemistry of addition reactions of any reagents to the triple bonds of diacetylene or vinyl acetylene systems, nor on the stereochemistry of the reactions of homolytic addition of thiols to acetylenes. The authors indicate that the stereochemistry of reactions of diacetylene (I) with alkyl thiols (II) giving 1-alkyl-thiobuten-1-ines-3 (III), investigated previously by them, as well as of reactions of compounds (III) with (II) giving the 1,4-dialkyl-thiobutadienes-1,3 (IV), take place according to the scheme given here. The geometric structure (IV) follows from the sulfone structure (V) which was confirmed by means of

Card 1/3

APPROVED FOR RELEASE: 08/31/2001 CIA-RDP86-00513R001757320001-5"

"APPROVED FOR RELEASE: 08/31/2001 CIA-RDP86-00513R001757320001-5

Stereochemistry of Addition Reactions to the Triple Bond

S/079/60/030/009/022/022/XX
B001/B066

dipole moments, ultraviolet and infrared spectra, as well as by quantitative isomerization of the cis-cis and cis-trans compounds (V) into the trans-trans compounds (V), under the action of iodine. Thus, the thiols add stereospecifically in nucleophilic reactions with the C≡C bonds, both in diacetylene and vinyl acetylene systems, according to the rule of "trans-addition" (Ref. 2). Under free radical conditions the reaction does not proceed quite stereoselectively, so that mixtures of cis-cis and trans-trans isomers (IV) are formed at low temperatures. The predominance of (IV) indicates a high specific gravity of the cis addition of the radicals. At elevated temperatures, isomerization to the trans-trans compound (IV) occurs. It was also found that the reaction of ethanethiol with ethyl-thio ethine (VI) (Ref. 3) proceeds stereospecifically both under free radical and ionic conditions, and obeys the rule of "trans-addition", since (VII-cis) is the main product yielding the sulfone (VIII-cis). Under free radical conditions, thiols may react with various acetylene compounds stereochemically in different ways. This is always due to the stability of one of the geometrical forms of the radical RSC=CX which appears

Card 2/3

APPROVED FOR RELEASE: 08/31/2001 CIA-RDP86-00513R001757320001-5"

"APPROVED FOR RELEASE: 08/31/2001 CIA-RDP86-00513R001757320001-5

Stereochemistry of Addition Reactions to the Triple Bond

S/079/60/030/009/022/022/XX
B001/B066

as an intermediate. An analogous phenomenon of homolytic addition reactions of bromine and hydrogen bromide to acetylene was described in Ref. 4. There are 4 references: 2 Soviet, 2 US, and 1 Italian.

ASSOCIATION: Institut organicheskoy khimii Akademii nauk SSSR (Institute of Organic Chemistry of the Academy of Sciences USSR)

SUBMITTED: May 30, 1960

Card 3/3

APPROVED FOR RELEASE: 08/31/2001 CIA-RDP86-00513R001757320001-5"

"APPROVED FOR RELEASE: 08/31/2001 CIA-RDP86-00513R001757320001-5

TSYMBAL, M.M., kand.sel'skokhoz.nauk

Disinfecting winter wheat seeds. Zashch. rast. ot vred. i bol. 8 no.8:20-21 Ag '63. (MIRA 16:10)

1. Vsesoyuznyy institut kukuruzy, Dnepropetrovsk.

APPROVED FOR RELEASE: 08/31/2001 CIA-RDP86-00513R001757320001-5"

"APPROVED FOR RELEASE: 08/31/2001 CIA-RDP86-00513R001757320001-5

TSYMBAL, M.M., kand.sel'skokhozyaystvennykh nauk

Importance of farming practices in controlling the common bunt of winter wheat in the steppe of the Ukrainian S.S.R. (MIRA 15:9)
Zemledelie 24 no.8:60-62 Ag '62.

1. Vsesoyuznyy nauchno-issledovatel'skiy institut kukuruzy.
(Ukraine--Wheat--Diseases and pests)
(Ukraine--Smuts)

APPROVED FOR RELEASE: 08/31/2001 CIA-RDP86-00513R001757320001-5"

"APPROVED FOR RELEASE: 08/31/2001 CIA-RDP86-00513R001757320001-5

5.3620

77039
SOV/62-59-12-33/43

AUTHORS: Shostakovskiy, M. F., Prilezhayeva, Ye. N., Tsymbal, L. V., Azovskaya, V. A., Starova, N. G.

TITLE: Brief Communication. Concerning Addition of Nucleophilic Reagents to α, β -Unsaturated Sulfones in Presence of "Triton B"

PERIODICAL: Izvestiya Akademii nauk SSSR. Otdeleniye khimicheskikh nauk, 1959, Nr 12, pp 2239-2241 (USSR)

ABSTRACT: Addition of nucleophilic reagents (alcohols, mercaptans, hydrogen sulfide, dialkyldithiophosphoric acids, etc.) to α, β -unsaturated sulfones of various structures is catalyzed to a great extent by "Triton B" (benzyltrimethylammonium hydroxide). The addition reaction starts upon addition of a few drops of "Triton B" (40-60% aqueous solution, 0.2-0.5% by weight) to an equimolar mixture of reacting substances. In most cases the reaction is exothermic (temperature rises up to 80-100°) and is completed within 2-3 hr, with a nearly quantitative yield. α, β -Unsaturated sulfones,

Card 1/5

APPROVED FOR RELEASE: 08/31/2001 CIA-RDP86-00513R001757320001-5"

"APPROVED FOR RELEASE: 08/31/2001 CIA-RDP86-00513R001757320001-5

Brief Communication. Concerning Addition of Nucleophilic Reagents to α, β - Unsaturated Sulfones in Presence of "Triton B"

77089
SOV/62-59-12-33/43

having other unsaturated bonds in the molecule (e.g., endo- and exovinyl bicycloheptenyl sulfones, obtained by reaction of cyclopentadiene with divinyl sulfone), add alcohol or mercaptan under these conditions only at the unsaturated bond activated by sulfone group:

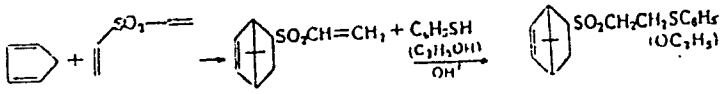

(endo + exo) (endo + exo)

Disulfones, having two unsaturated bonds, add two mercaptan molecules. Table 1 lists the yields and physical constants of the addition products (eight of them prepared to the first time) obtained by the authors.

Card 2/5

APPROVED FOR RELEASE: 08/31/2001 CIA-RDP86-00513R001757320001-5"

"APPROVED FOR RELEASE: 08/31/2001 CIA-RDP86-00513R001757320001-5

Brief Communication. Concerning Addition of Nucleophilic Reagents to α, β - Unsaturated Sulfones in Presence of "Triton B"

77089
SOV/62-59-12-33/43

TABLE 1

FORMULA	YIELD IN %	bp IN °C (PRESSURE IN mm)	mp (°C)	FOUND %			CALC %		
				C	H	S	C	H	S
$C_2H_5SO_2C_2H_4SC_2H_5$ **)	85,4	147—148,5 (3)	35—36	39,82	7,75	34,93	39,53	7,74	35,17
$C_2H_5SO_2C_2H_4SC_3H_7$ *)	99	—	32—93	42,93	8,22	32,42	42,82	8,21	32,66
$C_2H_5SO_2C_2H_4SC_4H_9$ *)	98	—	40—41	45,44	8,62	30,57	45,68	8,62	30,48
$C_2H_5SO_2C_2H_4SCH_2C_6H_5$ *)	90	—	56	54,04	6,64	26,10	54,06	6,60	26,24
$C_2H_5SO_2C_2H_4SC_6H_5$ ***)	90	124—125 (0,04)	39—40	52,05	6,03	27,68	52,14	6,12	27,90
$C_2H_5SO_2C_2H_4OH$	90	—	42—43	34,78	7,46	22,94	34,76	7,49	23,20
$C_2H_5SO_2C_2H_4OC_2H_5$ *)	91	125—130 (4)	—	43,40	8,42	19,30	43,39	8,49	19,29
$C_2H_5SO_2C_2H_4OC_4H_9$ -n) *)	89,6	116—116,5 (0,5)	—	49,37	9,37	16,44	49,45	9,34	16,50
$C_2H_5SO_2C_2H_4OCH_2CH_2OH$ *)		114—116 (0,03)	—	33,13	7,77	17,66	39,54	7,74	17,60
$(C_2H_5SO_2C_2H_4OCH_3)_2$ *)	Сумм. 85,4	188—190 (0,03)	—	39,55	7,33	21,19	39,71	7,33	21,21
$(C_2H_5SO_2C_2H_4)_2S$ *)	85	—	108—109	35,40	6,79	34,82	35,01	6,61	35,05
****) $C_2H_5SO_2C_2H_4SP(S)(OC_2H_5)_2$	34—43	133—137 (0,04)	—	31,46	6,18	31,43	31,35	6,25	31,40

(CONT.)

Card 3/5

APPROVED FOR RELEASE: 08/31/2001 CIA-RDP86-00513R001757320001-5"

"APPROVED FOR RELEASE: 08/31/2001 CIA-RDP86-00513R001757320001-5

TABLE 1 (cont.)

77089, SOV/62-59-12-33/43

FORMULA	YIELD %	bp in °C (PRESSURE IN mm)	mp (°C)	FOUND % C	FOUND % H	FOUND % S	CALC % C	CALC % H	CALC % S
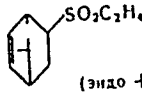 $SO_2C_2H_4OC_2H_5$ *) (эндо + экзо)	Сумм. 94	85—85,5 (0,03)	—	56,95	8,06	13,93	57,36	7,88	13,92
		95—97 (0,03)	—	57,53	8,01	14,04			
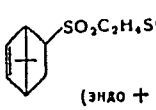 $SO_2C_2H_4SC_6H_5$ *) (эндо + экзо)	Сумм. 86	—	33	—	—	21,50	61,06	6,13	21,74
		—	47	61,32	6,27	21,70			
$C_6H_5SO_2CH_2CH-CHCH_2SO_2C_6H_5$ *) (SC₆H₅, SC₆H₅)	84	—	112—113	56,53	6,66	24,81	55,99	6,66	24,92

Notes: * Obtained for the first time. ** In the literature [Lorenz, W., Pat. FRG (Federal Republic of Germany), 876691 (5/18/1953); Referat. Zhur. Khim., Nr 32864 (1955)], it is described as a compound, liquid at room temperature, bp 127-129° (2 mm). *** Literature [Moore, A. H. Ford, J. Chem. Soc., 1949, 2433], mp 36-38°. **** Found: P 9.62; 10.00%. Calculated: P. 10.11%. In the literature [Thompson, R. B., Cheniceck, J. A., Symon, T., J. Ind. Eng. Chem., 50, 797 (1958)] it is described as "nonvolatile residue".

Card 4/5

APPROVED FOR RELEASE: 08/31/2001 CIA-RDP86-00513R001757320001-5"

"APPROVED FOR RELEASE: 08/31/2001 CIA-RDP86-00513R001757320001-5

Brief Communication. Concerning Addition of Nucleophilic Reagents to α, β-Unsaturated Sulfones in Presence of "Triton B"

77089
SOV/62-59-12-33/43

There is 1 table; and 6 references, 2 Soviet, 1 German, 1 U.K., 2 U.S. The U.K. and U.S. references are: A. H. Ford, Moore, J. Chem. Soc. 1949, 2433; J. L. Szabo, E. T. Stiller, J. Amer. Chem. Soc. 70, 3667 (1948); Ch. D. Hurd, L. L. Gershbein, J. Amer. Chem. Soc. 69, 2328 (1947); R. B. Thompson, J. A. Cheniceck, T. Symon, J. Industr. and Engng. Chem., 50, 797 (1958).

ASSOCIATION: N. D. Zelinskiy Institute of Organic Chemistry of the Academy of Sciences, USSR (Institut organicheskoy khimii imeni N. D. Zelinskogo Akademii nauk SSSR)

SUBMITTED: May 4, 1959

Card 5/5

APPROVED FOR RELEASE: 08/31/2001 CIA-RDP86-00513R001757320001-5"

"APPROVED FOR RELEASE: 08/31/2001 CIA-RDP86-00513R001757320001-5

5.3620

25318

S/020/61/138/005/018/025
B103/B220

AUTHORS: Prilezhayeva, Ye. N., Tsymbal, L. V., and Shostakovskiy, M. F., Corresponding Member AS USSR

TITLE: Comparative dienophilic reactivity in the series: vinyl sulfide — vinyl sulfoxide — vinyl sulfone

PERIODICAL: Akademiya nauk SSSR. Doklady, v. 138, no. 5, 1961, 1122-1125

TEXT: In previous papers, it was proved by the authors that the electrophilic nature of the double bond in the series of sulfur-containing vinyl compounds increases from vinyl sulfide over vinyl sulfoxide to vinyl sulfone. In ionic reactions, reagents add to vinyl-alkyl sulfides in the presence of acid catalysts in strict accordance with Markovnikov's rule (M. F. Shostakovskiy et al. Ref. 1; Izv. AN SSSR, OKhN, 1955, 154; Sintez i nekotoryye svoystva tiovinilovykh efirov (synthesis and some properties of thiovinyl ester), N. I. Uvarova, Kand, dissertatsiya (candidate's thesis), IOKh AN SSSR, 1953). Therefrom the authors conclude that the sulfur atom in these vinyl compounds acts as an electron donor:

$$\overset{\delta}{C}H_2 = CH \overset{\delta}{-} \underset{\approx}{S} - R,$$

Card 1/5

APPROVED FOR RELEASE: 08/31/2001 CIA-RDP86-00513R001757320001-5"

"APPROVED FOR RELEASE: 08/31/2001 CIA-RDP86-00513R001757320001-5

and that the double bond shows nucleophilic character just like that in oxygen vinyl esters. The HX reagents add to vinyl sulfoxides and sulfones merely under the influence of alkaline catalysts. Thereby, only $RSOCH_2CH_2X$ or $RSO_2CH_2CH_2X$ compounds are formed, and the associative activity of the nucleophilic reagent and, consequently, the electrophilic nature of the double bond increase from sulfoxide to sulfone. This indicates that the sulfonyl group is a much better electron acceptor than the sulfinyl group. The authors studied the variations of the reactivity of this series of compounds when used as dienophiles with one and the same diene. Cyclopentadiene (CP) and hexachlorocyclopentadiene (HCCP) were chosen as dienes. Up to the present, next to nothing has been known about the reactivity of vinyl-ethyl sulfoxide and, moreover, about the reactions occurring in the synthesis of diene in the presence of α,β-unsaturated sulfinyl compounds. The authors effected reactions between vinyl-ethyl sulfide, sulfoxide, and sulfone on the one hand, and CP or HCCP on the other, the conditions being as comparative as possible. They concluded from the results that the dienophiles mentioned from two reverse series with Cp and HCCP. As CP contains electropositive H atoms besides a diene system, reacts exothermically with vinyl-ethyl sulfone, and requires a

APPROVED FOR RELEASE: 08/31/2001 CIA-RDP86-00513R001757320001-5"

"APPROVED FOR RELEASE: 08/31/2001 CIA-RDP86-00513R001757320001-5

25318

S/020/61/138/005/018/025
B103/B220

Comparative dienophilic reactivity...

longer heating with vinyl-ethyl sulfide, it may be seen that the activity for $CH_2=CHX$ increases in the order $X=RS < RSO \ll RSO_2$. With HCCP which has an electronegative chlorine at the double bond, the opposite dependence is found: $X=RS > RSO > RSO_2$; here, vinyl-ethyl sulfide exhibits the highest reactivity. It is concluded that the activity of diene synthesis depends on the interrelations between the polarization of the double bonds of diene and dienophile rather than on the character of polarization of the double bond of the dienophile. Thus, HCCP is bound to be active for dienophiles having electron donor substituents, whereas CP is active for dienophiles having electron acceptor substituents. The authors obtained only monoadducts of vinyl-ethyl sulfoxide (I,II) with both HCCP and CP

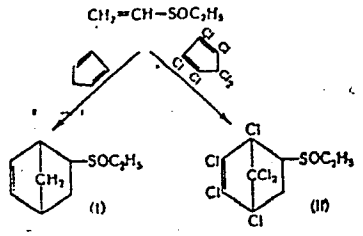

(I)

Card 3/5

APPROVED FOR RELEASE: 08/31/2001 CIA-RDP86-00513R001757320001-5"

"APPROVED FOR RELEASE: 08/31/2001 CIA-RDP86-00513R001757320001-5

On reaction with CP a mixture of crystalline and liquid (I) is formed at a ratio of about 3:1. Apparently, the higher melting product has an endo-configuration, and Alder's rule is followed in this reaction. (II) is formed on reaction with HCCP; it has a definite melting point which is not changed by recrystallization. This indicates a steric homogeneity of (II). The adducts obtained from HCCP and vinyl-ethyl sulfide (III) as well as sulfoxide (II) give the same product (IV) as obtained from HCCP and vinyl-ethyl sulfone, under conditions excluding isomerization

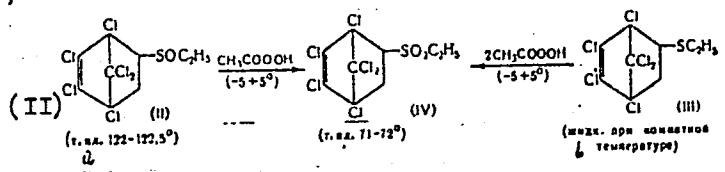

(where a) melting point; b) liquid at room temperature). Recently, it has been proved by the authors and V. A. Azovskaya et al. (Ref. 11: ZhOKh, 31, No. 6 (1961)) that the reaction of divinyl sulfone with HCCP results in an exoadduct as primary product. In their opinion, the reason for this deviation from Alder's rule is the thermal izomerization of the corre-

APPROVED FOR RELEASE: 08/31/2001 CIA-RDP86-00513R001757320001-5"

"APPROVED FOR RELEASE: 08/31/2001 CIA-RDP86-00513R001757320001-5

sponding endo-monoadduct to an exo-monoadduct. Apparently, the same rule holds in the present case. The adduct of vinyl-ethyl sulfide (III) (synthesized at room temperature) undergoes complete isomerization during fractionation of the reaction mixture. There are 1 table and 11 references: 8 Soviet-bloc and 3 non-Soviet-bloc. The two references to English-language publications read as follows: Ref. 7: K. Alder, XIV Intern. Congr. of Pure and Applied Chemistry, 1955; Ref. 9: Allen, J. Am. Chem. Soc., 62, 656 (1940).

ASSOCIATION: Institut organicheskoy khimii im. N. D. Zelinskogo Akademii nauk SSSR (Institute of Organic Chemistry imeni N. D. Zelinskiy of the Academy of Sciences USSR)

SUBMITTED: February 14, 1961

APPROVED FOR RELEASE: 08/31/2001 CIA-RDP86-00513R001757320001-5"

"APPROVED FOR RELEASE: 08/31/2001 CIA-RDP86-00513R001757320001-5

TSYMBAL, M.M.

CA

19

Endocrine regulation of carbohydrate metabolism in rheumatism in children. II. M. M. Tsymbal (Leningrad Med. Inst.). *Voprosy Pediat. i Okhrany Materinstva i Detstva* **13**, No. 5, 266-71(1941).--Deviations of data on the glycogen level in the blood in rheumatic children in comparison with healthy subjects depend on the action of the rheumatic infection. No direct dependence was found between the reflexes of the vegetative nervous system and the presence of insulin and adrenaline in the blood. Blood sugar and glycogen levels (in the fasting state) depend on the incretion of the suprarenals, provided that the liver function is unimpaired as this can affect the action of these substances. Injection into rats of the blood of a healthy child during fasting and 0.5 and 1.0 hr. after loading with sugar, leads to a corresponding rise of the glycogen and the sugar levels in 50% of the rats when fasting blood was used, in 28.6% with blood drawn at 0.5 hr. after loading with sugar and in 62.5% with blood drawn after 1 hr. This increase of glycogen may be due to the synthesis of glycogen in rat blood in spite of the presence of insulin. When rheumatic children's blood was used, a parallel fall of sugar and glycogen in the rat blood was observed regardless of the time when the blood was withdrawn from the child (fasting or after loading with sugar); in a few cases a parallel rise of both levels was observed. In most cases the blood sugar of the rheumatic child showed a direct dependence on the amt. of insulin and adrenaline present; a high sugar level corresponded to a high adrenaline and low insulin. The highest glycogen level in the fasting state was found in chorea, the lowest in cardiac forms of rheumatism.

G. M. Kosolapoff

APPROVED FOR RELEASE: 08/31/2001 CIA-RDP86-00513R001757320001-5"

"APPROVED FOR RELEASE: 08/31/2001 CIA-RDP86-00513R001757320001-5

TSYMBAL, M.M., kand. sel'skokhozyaystvennykh nauk

Hidden harmfulness of common bunt and its elimination in winter wheat fields. Agrobiologiia no.5:733-737 S-O'63. (MIRA 17:5)

1. Vsesoyuznyy nauchno-issledovatel'skiy institut kukuruzy, Dnepropetrovsk.

APPROVED FOR RELEASE: 08/31/2001 CIA-RDP86-00513R001757320001-5"

"APPROVED FOR RELEASE: 08/31/2001 CIA-RDP86-00513R001757320001-5

TSYMBAL, M.M., kand.sel'skokhoz.nauk

Effect of irrigation on the susceptibility of spring wheat and barley to loose smut. Agrobiologiia no.3:450-452 My-Je '59. (MIRA 12:9)

1. Vsesoyuznyy nauchno-issledovatel'skiy institut kukuruzy, g.Dnepropetrovsk.
(Wheat--Diseases and pests) (Barley--Diseases and pests)
(Smuts)

APPROVED FOR RELEASE: 08/31/2001 CIA-RDP86-00513R001757320001-5"

"APPROVED FOR RELEASE: 08/31/2001 CIA-RDP86-00513R001757320001-5

TSYMBAL, M.M., YAKIMENKO, T.V.

Seeds - Disinfection

Using feed steamer ZK-0.5 for single-phase thermal disinfection of wheat and barley seeds. Sel. i. sem. 19 no. 5, 1952

Monthly List of Russian Accessions, Library of Congress, July 1952. Unclassified

APPROVED FOR RELEASE: 08/31/2001 CIA-RDP86-00513R001757320001-5"

"APPROVED FOR RELEASE: 08/31/2001 CIA-RDP86-00513R001757320001-5

C

USSR/Plant Diseases. Diseases of Cultivated Plants.

Abs Jour: Ref Zhur-Biol., No 5, 1958, 20671.

Author : Tsymbal, M.M.
Inst : [redacted]
Title : Striped Spottiness in Barley and the Struggle with it on the Steppes of the UkSSR.

Orig Pub: Zemledeliye, 1957, No 7, 87-88.

Abstract: No abstract.

Card : 1/1

11

APPROVED FOR RELEASE: 08/31/2001 CIA-RDP86-00513R001757320001-5"

"APPROVED FOR RELEASE: 08/31/2001 CIA-RDP86-00513R001757320001-5

1. TSYMBAL, M. M.

2. USSR (600)

4. Wheat

7. Maintaining resistance to hard smut in Odessa 3 winter wheat. Sel. i sem. 20, No. 14, 1953.

9. Monthly List of Russian Accessions, Library of Congress, April 1953. Unclassified.

APPROVED FOR RELEASE: 08/31/2001 CIA-RDP86-00513R001757320001-5"

"APPROVED FOR RELEASE: 08/31/2001 CIA-RDP86-00513R001757320001-5

TSYMBAL, M.M., kandidat sel'skokhozyaystvennykh nauk.

Barley stripe disease and its control in the Ukrainian steppes. (MLRA 10:8)
Zemledelie 5 no.7:87-88 Jl '57.
(Ukraine--Barley stripe disease)

APPROVED FOR RELEASE: 08/31/2001 CIA-RDP86-00513R001757320001-5"

"APPROVED FOR RELEASE: 08/31/2001 CIA-RDP86-00513R001757320001-5

TSYMBAL, M.M., kand. sel'skokhoz. nauk

Seed disinfection and cultivation practices in controlling common bunt of wheat. Zashch. rast. ot vred. i bol. 6 no.10: 32-33 O '61. (MIRA 16:6)

1. Vsesoyuznyy institut kukuruzy, Dnepropetrovsk.
(Ukraine—Wheat—Diseases and pests)
(Ukraine—Smuts)

APPROVED FOR RELEASE: 08/31/2001 CIA-RDP86-00513R001757320001-5"

"APPROVED FOR RELEASE: 08/31/2001 CIA-RDP86-00513R001757320001-5

RYSHKOVSKIY, I. Ya., kand.tekhn.nauk, dotsent; TSYMBAL, N.N., inzh.

Effect of voltage losses in the contact net on train traffic velocity and on operating expenses. Trudy DIIT no.29:34-39 '59. (MIRA 13:5)

(Electric railroads)

APPROVED FOR RELEASE: 08/31/2001 CIA-RDP86-00513R001757320001-5"

"APPROVED FOR RELEASE: 08/31/2001 CIA-RDP86-00513R001757320001-5

TSYMBAL, N. T.

3

SOV/5335

PHASE I BOOK EXPLOITATION

Akademiya nauk SSSR. Mezhduvedomstvennyy komitet po provedeniyu Mezhdunarodnogo geofizicheskogo goda. V razdel programmy MGG: Ionosfera.

Dreyfy i neodnorodnosti v ionosfere (Drifts and Inhomogeneities in the Ionosphere) Moscow, Izd-vo AN SSSR, 1959. 69 p. (Series: Sbornik statey, no. 1) 1,500 copies printed. Added t. p.: Drifts and Irregularities in the Ionosphere.

Resp. Ed.: S. F. Mirkotan; Ed.: A. D. Podol'skiy; Tech. Ed.: V. V. Bruzgul'.

PURPOSE: The publication is intended for geophysicists, meteorologists, and communications specialists.

COVERAGE: This collection of 6 articles presents the results of investigations of drifts and inhomogeneities in the ionosphere, according to observations made at the Ashkhabad, Moscow, Tomsk, and Khar'kov stations during the 1957-1958 period. The fact that these stations are geographically situated at different latitudinal and longitudinal coordinates is of importance for the comparison of observational results presented in individual articles. An English résumé accompanies each article. No personalities are mentioned. References follow the articles.

TABLE OF CONTENTS:

Foreword 5

Gusev, V. D., S. F. Mirkotan, L. A. Drachev, Yu. V. Berezin, and M. P. Kiyanovskiy. Results of Investigating the Parameters of Large-Scale Ionospheric Inhomogeneities by Applying the Phase Method 7

Kushnerevskiy, Yu. V., and Ye. S. Zayarnaya. Drift of Small-Scale Inhomogeneities in the F2 Layer 22

Yerofeyev, N. M., G. G. Dzhemilev, V. P. Perelygin, and V. P. Petinov. The First Results of Radio Observations of the Movement of Inhomogeneities (Winds) in the Ionosphere Over Ashkhabad at the Altitudes of 200-300 km 34

Kashcheyev, B. L., N. T. Tsymbal, and Ye. G. Proshkin. Investigation of the Ionosphere Over Khar'kov During the IGY 40

APPROVED FOR RELEASE: 08/31/2001 CIA-RDP86-00513R001757320001-5"

"APPROVED FOR RELEASE: 08/31/2001 CIA-RDP86-00513R001757320001-5

41790

S/194/62/000/008/072/100
D271/D308

AUTHOR: Tsymbal, N.T.

TITLE: Dependence of the angular scatter of reflected waves on the velocity of motions and the degree of inhomogeneity in the F region of ionosphere

PERIODICAL: Referativnyy zhurnal. Avtomatika i radioelektronika, no. 8, 1962, abstract 8Zh206 (In collection: Ionosfern. issledovaniya, no. 9, M., AN SSSR, 1961, 40-46 [Summary in Eng.])

TEXT: Results are given of measurements of the angular scatter θ_0 of radio waves reflected from the F region of ionosphere, of the inhomogeneity degree β (ratio of mirror and scattered components) of reflecting region, of the mean-square velocity v_0 of random motions of inhomogeneities, and of the velocity V' of horizontal drift. Measurements were carried out in the range 3 - 17 Mc/s. The results are presented in tables and graphs. In the measurement period (August, 1957 - September, 1958) the average values of θ_0 were found

Card 1/2

APPROVED FOR RELEASE: 08/31/2001 CIA-RDP86-00513R001757320001-5"

"APPROVED FOR RELEASE: 08/31/2001 CIA-RDP86-00513R001757320001-5

S/194/62/000/008/072/100
D271/D308

Dependence of the angular ...

to be 0.9 in daytime and 2.5 at night, and average values of β were 2.0 in daytime and 1.0 at night. Mean values of v_o in the autumn - winter period of observation were 0.8 m/sec in daytime and 2.3 m/ /sec. at night, and in the spring-summer period - 0.9 m/sec. in daytime and 1.3 m/sec. at night. The energy of simple reflections from the F region is concentrated in a cone whose vertical angle can vary between 0.6° and 14°. Relationships between the angular scatter θ_o and parameters β, v_o and V' are found: θ_o increases when β falls and when v_o and V' increase. Regular diurnal variations of θ_o and β were found. The observed diurnal and seasonal variation of β values confirms the conclusion about the influence of zenith angle on the inhomogeneity degree of the F region. [Abstracter's note: Complete translation.]

Card 2/2

APPROVED FOR RELEASE: 08/31/2001 CIA-RDP86-00513R001757320001-5"

"APPROVED FOR RELEASE: 08/31/2001 CIA-RDP86-00513R001757320001-5

S/169/62/000/002/069/0[illegible]
D228/D301

AUTHOR: Tsymbal, N. T.

TITLE: Investigation of the fine structure of the [illegible] F-layer

PERIODICAL: Referativnyy zhurnal Geofizika, no. 2, 1962, 28-29, abstract 2G185 (Mezhdunar. geofiz. god. Inform. byul., no. 3, 1961, 19-23)

TEXT: The author gives the results of the experimental investigation at Khar'kovskiy politekhnicheskiy institut (Khar'kov Polytechnic Institute) of the degree of the β_2-irregularity and the angular scattering of waves, reflected from the ionosphere's F-layer during the period from the end of August 1957 to May 1958. The average quadratic velocities of chaotic irregularity movements in the F-layer, v_0, were determined together with their horizontal dimensions, q_0, from measurements carried out from September to December 1957. [Abstracter's note: Complete translation.]

Card 1/1

APPROVED FOR RELEASE: 08/31/2001 CIA-RDP86-00513R001757320001-5"

"APPROVED FOR RELEASE: 08/31/2001 CIA-RDP86-00513R001757320001-5

89773
S/169/61/000/002/027/039
A005/A001

9.9300

Translation from: Referativnyy zhurnal, Geofizika, 1961, No. 2, p. 42, # 2G297

AUTHORS: Kashcheyev, B. L., Tsymbal, N. T., Proshkin, Ye. G.

TITLE: The Investigation of the Ionosphere Above Khar'kov During the IGY

PERIODICAL: V sb.: "Dreyfy i neodnorodnosti v ionosfere", No. 1, Moscow, AN SSSR, 1959, pp. 40-49 (English summary)

TEXT: Results are presented of investigations of the inhomogeneous structure of the ionosphere from observations conducted at Khar'kov in 1954. The equipment is briefly described for measuring the drifts in the ionosphere by the method of spaced reception with a small base, as well as the applied method of calculating the speed and direction of drifts, the ionospheric turbidity degree β, the root-mean-square speed of the (chaotic) motion of inhomogeneities in the F2-layer (V_0), the fluctuations of the electron density in the F-layer (δN), and the angular spectrum of radiowaves (θ_0) scattered from the F-layer. It is pointed out that by night the values $\beta = 0.5 - 1.5$ are mostly observed (in 80% of the events). By day is mostly (80%) $\beta = 1 - 4$. For the F-layer an energy of the mirror-reflected wave exceeding the energy of the scattered waves ($\beta > 1$) was observed by day in

Card 1/2

APPROVED FOR RELEASE: 08/31/2001 CIA-RDP86-00513R001757320001-5"

"APPROVED FOR RELEASE: 08/31/2001 CIA-RDP86-00513R001757320001-5

89773

S/169/61/000/002/027/039
A005/A001

The Investigation of the Ionosphere Above Khar'kov During the IGY

90% of the events, by night, in 50% of events scattered reflection ($\beta < 1$) was observed. The study of the distribution of amplitudes of the reflected signals showed that the distribution has normal Rayleigh regularity in 90% of events. For the E-layer, the values of β varied within the limits 0-7. Values of 0.3 - 6 were observed for θ_0. A dependence of θ_0 on the time during 24 hours (by night θ_0 increases) and a negative correlation between β_0 and θ_0 were ascertained. The most probable values V_0 = 0.5 - 1.5 m/sec and δN = (0.4 - 1.0) 10^{-2} were found. Dependences of V_0 on the solar activity and δN on the altitude were not ascertained for the F-layer. The direction of horizontal drift in the layer was chiefly northwestward after midnight and northeastward after midday. Mostly the speed of (40 - 50) m/sec was observed. In summer the speed of drift is somewhat higher than in winter. For the E-layer the chief direction of drift was southwestward after midnight and northeastward and southwestward after midday. The most probable value of the speed was (40 - 60) m/sec. There are 12 references.

E. Kazimirovskiy

Translator's note: This is the full translation of the original Russian abstract.

Card 2/2

APPROVED FOR RELEASE: 08/31/2001 CIA-RDP86-00513R001757320001-5"

"APPROVED FOR RELEASE: 08/31/2001 CIA-RDP86-00513R001757320001-5

06536

SOV/142-2-2-12/25

9(3,9), 24(5)

AUTHOR: Tsymbal, N.T.

TITLE: An Investigation of the Influence of Inhomogeneities in the F-Layer of the Ionosphere on the Angular Scattering of Reflected Energy

PERIODICAL: Izvestiya vysshikh uchebnykh zavedeniy, Radiotekhnika, 1959, Vol 2, Nr 2, pp 221-226 (USSR)

ABSTRACT: The author presents the results of investigations of the influence of the irregular structure of the F-layer of the ionosphere on the angular scattering of reflected energy during a period of maximum solar activity. The observations were conducted in Khar'kov from September 1957 to Junary 1958. For the observations, the ionosphere station described in [Ref 4] was used. Figure 1 shows the block diagram of this station. The transmitter had a power of 30 kva for pulses of 100 microseconds with a pulse sequence of 50 pulses per second. The frequency range of the transmitter was increased to 17 mc. A triangular antenna arrangement was used having a height of 20 m.

Card 1/3

APPROVED FOR RELEASE: 08/31/2001 CIA-RDP86-00513R001757320001-5"

"APPROVED FOR RELEASE: 08/31/2001 CIA-RDP86-00513R001757320001-5

06536
SOV/142-2-2-12/25

An Investigation of the Influence of Inhomogeneities in the F-Layer of the Ionosphere on the Angular Scattering of Reflected Energy

The receiver was a superheterodyne with an amplification of 10^6, having a pass bandwidth of 17 kc. Its amplitude characteristic at the outlet was linear up to 80 volts. The outlet was connected to a electron-ray tube. Vertical sonding was used for the investigations and was performed usually during absence of ionospheric disturbances. Each of the antenna sections produced its own line on the oscillograph screen. These lines were photographed as shown in figure 3. The author then presents some results of the measurements a) of the factor k, characterizing the degree of ionospheric irregularity, and b) the angular scattering ($_0$) of a wave beam. Based on the analysis of preliminary experimental results, the author presents some conclusions. In 90% of all cases, an excess of a mirror-reflected wave energy over the scattered wave energy was observed during the day time ($k>1$). Data obtained during the night showed in 50% of all

Card 2/3

APPROVED FOR RELEASE: 08/31/2001 CIA-RDP86-00513R001757320001-5"

"APPROVED FOR RELEASE: 08/31/2001 CIA-RDP86-00513R001757320001-5

06536
SOV/142-2-2-12/25

An Investigation of the Influence of Inhomogeneities in the F-Layer of the Ionosphere on the Angular Scattering of Reflected Energy

cases a scattering reflection(1). The data obtained for the angular scattering for the F-layer are in agreement with data obtained by other authors /Ref 5,6/. The author expresses his gratitude to Professor S.Ya. Braude for the guidance of this investigation. There are 2 block diagrams 3 graphs, 1 oscillogram and 8 references, 5 of which are Soviet and 3 English. This article was recommended by the Kafedra osnov radiotekhniki Khar'kovskogo politekhnicheskogo instituta imeni V.I. Lenina (Chair of Radio Engineering Principles of the Khar'kov Polytechnic Institute imeni V.I. Lenin)

SUBMITTED: July 23, 1958

Card 3/3

APPROVED FOR RELEASE: 08/31/2001 CIA-RDP86-00513R001757320001-5"

"APPROVED FOR RELEASE: 08/31/2001 CIA-RDP86-00513R001757320001-5

TSYMBAL, V.T.

TSYMBAL, V.T., Cand Tech Sci --(diss)"Study of the effect of the heterogeneous structure of the F layer of the ionosphere upon angular dispersion of reflected energy." Khar'kov, 1959. 8 pp (Min of Higher Education UkSSR. Khar'kov Polytech Inst im V.I. Lenin), 120 copies (KL,38-59, 104)

-30-

APPROVED FOR RELEASE: 08/31/2001 CIA-RDP86-00513R001757320001-5"

"APPROVED FOR RELEASE: 08/31/2001 CIA-RDP86-00513R001757320001-5

KASHCHEYEV, B.L.; TSYMBAL, N.T.; PROSHKIN, Ye.G.

Ionospheric investigations over Kharkov during the period of the International Geophysical Year. Dreify i neodn. v ionosf. no.1: 40-49 '59. (MIRA 13:1)

(Ionosphere)

APPROVED FOR RELEASE: 08/31/2001 CIA-RDP86-00513R001757320001-5"

"APPROVED FOR RELEASE: 08/31/2001 CIA-RDP86-00513R001757320001-5

TSYMBAL, N.T.

Investigation of the effect of inhomogeneity in the F layer of the ionosphere on the angular scattering of the reflected energy. Izv. vys. ucheb. zav.; radiotekh. 2 no.2:221-226 Mr-Ap '59. (MIRA 12:7)

1. Rekomendovana kafedroy osnov radiotekhniki Khar'kovskogo politekhnicheskogo instituta im. V.I. Lenina.
(Ionospheric radio wave propagation)

APPROVED FOR RELEASE: 08/31/2001 CIA-RDP86-00513R001757320001-5"

"APPROVED FOR RELEASE: 08/31/2001 CIA-RDP86-00513R001757320001-5

TSYMBAL, N.T.

Investigating the fine structure of the F layer of the ionosphere
Mezhdunar.geofiz.god no.3:19-23 '61. (MIRA 14:10)

1. Khar'kov Polytechnical Institute.
(Ionosphere)

APPROVED FOR RELEASE: 08/31/2001 CIA-RDP86-00513R001757320001-5"

"APPROVED FOR RELEASE: 08/31/2001 CIA-RDP86-00513R001757320001-5

43086

S/058/62/000/008/112/134
A160/A101

4,9842

AUTHOR: Tsymbal, N. T.

TITLE: The dependence of the angular dispersion of reflected waves on the velocity of movements and the degree of irregularity of the F region of the ionosphere

PERIODICAL: Referativnyy zhurnal, Fizika, no. 8, 1962, 29, abstract 8Zh206 (In collection: "Ionosfern. issledovaniya. No. 9". Moscow, AN SSSR, 1961, 40 - 46; summary in English)

TEXT: Presented are the results of measuring the angular dispersion θ_o of the radio waves reflected from the F region of the ionosphere, the degree of the irregularity β (the ratio of the mirror component to the scattered one) of the reflecting region, the mean-square velocity v_o of the chaotic movements of the irregularities, and the velocity V' of the horizontal drift. The investigations were carried out in the range of 3 - 17 Mc. The results are presented in the form of tables and graphs. During the measuring period (August 1957 - September 1958) the mean values for θ_o proved to equal 0.9 by day and 2.5 by night, and

Card 1/2

APPROVED FOR RELEASE: 08/31/2001 CIA-RDP86-00513R001757320001-5"

"APPROVED FOR RELEASE: 08/31/2001 CIA-RDP86-00513R001757320001-5

for β - 2.0 by day and 1.0 by night. During the fall-winter observation period, the mean values for v_0 are 0.8 m/sec by day and 2.3 m/sec by night, and during the spring-summer period - 0.9 m/sec by day and 1.3 m/sec by night. The energy of single reflections from the F region concentrates in the cone, the vertical angle of which can change from 0.6^0 to 14^0. The relation between the angular dispersion θ_0 and the parameters β, v_0, v' is clarified: θ_0 increases when β decreases and v_0 and V' increase. Regular daily variations of the parameters θ_0 and β were detected. The daily and seasonal course of the values of β confirms the conclusion on the effect of the zenith angle on the degree of irregularity of the F region.

[Abstracter's note: Complete translation]

APPROVED FOR RELEASE: 08/31/2001 CIA-RDP86-00513R001757320001-5"

"APPROVED FOR RELEASE: 08/31/2001 CIA-RDP86-00513R001757320001-5

30154
S/609/61/000/003/002/008
D039/D112

9.9110

AUTHOR: Tsymbal, N.T.

TITLE: An investigation of the fine structure of the F layer of the ionosphere

SOURCE: Akademiya nauk Ukrayins'koyi RSR. Organizatsionnyy komitet po provedeniyu Mezhdunarodnogo geofizicheskogo goda. Mezhdunarodnyy geofizicheskiy go... informatsionnyy byulleten', no. 3, 1961, 19-23

TEXT: This paper presents a study of the fine structure of the F layer of the ionosphere, carried out from the end of August 1957 to May 1958. The following values were measured: the angle spread θ_0 of waves reflected from the F layer; the degree of heterogeneity β_2 of the ionosphere; the mean quadratic velocity v_0 of the chaotic movements of heterogeneities; and the dimensions ρ_0 of the latter heterogeneities. The two latter values were measured from September to December 1957. The results of all measurements are contained in tables 2-5. The equipment and methods used, were described

Card 1/5 2

APPROVED FOR RELEASE: 08/31/2001 CIA-RDP86-00513R001757320001-5"

"APPROVED FOR RELEASE: 08/31/2001 CIA-RDP86-00513R001757320001-5

30154
S/609/61/000/003/002/008
D039/D112

An investigation of the ...

previously by B.L. Kashcheyev, B.G. Bondar' and Ye.G.Proshkin (Ref. 3: Izv. vyssh. ucheb. zavedeniy MVO SSSR, razd. "Radiotekhnika", No. 1, 1958), and B.L.Kashcheyev, Ye.G.Proshkin and N.T.Tsymbal (Ref. 4: tr KhPI im. V.I.Lenina, t. XX, vyp. 1, ser. elektromashinostroyeniya, 1958.). Ref. 4 also contains the preliminary results of measurements of the parameters studied more fully in the present work. The study was based on 380 ionospheric measurements. The values obtained for θ_0 accord with data obtained in 1950-51 in England by other methods (Ref. 5: E.N.Brambey, Proc. Inst. El. Eng., pt. III, 98, pp. 19-25, 1951; Ref. 6: B.H. Briggs, G.J.Phillips, Proc. Phys. Soc., B. 63, pp. 907-924, 1950.). The results of the measurements agree with those obtained previously. In conclusion, the author thanks Professor S.Ya.Braude for the attention he gave to the work and his assistance in discussing the results. There are 5 figures and 7 references: 4 Soviet-bloc and 3 non-Soviet-bloc. The three references to English-language publications read as follows: E.N. Brambey, Proc. Inst. El. Eng., pt. III, 98, pp. 19-25, 1951; B.H. Briggs, G.J. Phillips, Proc. Phys. Soc., B. 63, pp. 907-924, 1950; H.G. Booker, J.A. Ratcliffe, D.H. Shinn, Trans. Roy. Soc., 242, pp. 579-609, 1950.

ASSOCIATION: Khar'kovskiy politekhnicheskiy institut (Khar'kov Polytechnic Institute)

Card 2/5/2

APPROVED FOR RELEASE: 08/31/2001 CIA-RDP86-00513R001757320001-5"

"APPROVED FOR RELEASE: 08/31/2001 CIA-RDP86-00513R001757320001-5

USSR/Electronics - Miniature Tubes Shortages

Apr 52

238T60

"Letter to the Editors," P. Tsymbal, M. Urech'ye, Bobruyskaya Oblast

"Radio" No 4, p 17

Writer wished to convert his "Rodina-47" receiver to miniature tubes. After finding miniature tubes with great difficulty, the only sockets he could find were the expensive hf ceramic type. Editors state that they have received a number of letters

238T60

from amateurs concerning difficulty in obtaining sockets for miniature tubes, and remedy the situation by giving a description of a home-made tube socket.

238T60

TSYMBAL P.

APPROVED FOR RELEASE: 08/31/2001 CIA-RDP86-00513R001757320001-5"

"APPROVED FOR RELEASE: 08/31/2001 CIA-RDP86-00513R001757320001-5

TSYLBAL, R.M., Cand Chem Sci--(diss) "Study of the reaction of nitrosation of secondary aromatic amines." Dnepropetrovsk, 1957. 17 pp with graphs (Min of Higher Education UkSSR. Dnepropetrovsk Chem-Technological Inst im F.E.Dzerzhinskiy), 200 copies (KL,49-58,121)

APPROVED FOR RELEASE: 08/31/2001 CIA-RDP86-00513R001757320001-5"

"APPROVED FOR RELEASE: 08/31/2001 CIA-RDP86-00513R001757320001-5

5(4)

AUTHORS: Loshkarev, M. A., Burmistrov, S. I., Tsymbal, R. M.

SOV/153-58-2-3/30

TITLE: Kinetics of the Nitrosation of Secondary Aromatic Amines (Kinetika nitrozirovaniya vtorichnykh aromaticheskikh aminov) Communication I. Velocity of the Nitrosation of Tropaeolin in Sulfuric Acid Solutions (Soobshcheniye I. Skorost' nitrozirovaniya tropeolina v rastvorakh sernoy kisloty)

PERIODICAL: Izvestiya vysshikh uchebnykh zavedeniy. Khimiya i khimicheskaya tekhnologiya, 1958, Nr 2, pp 6 - 16 (USSR)

ABSTRACT: In earlier papers the authors presented the results of their investigations of the equilibrium of the nitrosation reaction of single secondary aromatic amines; the values of their isobaric potentials and of the heat effects of the reactions were calculated. In the present communication the velocity mentioned in the subtitle is studied in dependence on the concentration of the dipole and anion form of tropaeolin, on the HNO_3 content, on the total acidity, and on the

Card 1/5

APPROVED FOR RELEASE: 08/31/2001 CIA-RDP86-00513R001757320001-5"

"APPROVED FOR RELEASE: 08/31/2001 CIA-RDP86-00513R001757320001-5

Kinetics of the Nitrosation of Secondary Aromatic Amines. SOV/[illegible]-[illegible]-2-[illegible]
Communication I. Velocity of the Nitrosation of Tropaeolin in Sulfuric Acid Solutions

temperature. The explanation of the influence of these factors must make it much easier to determine the mechanism of the N-nitrosation, as the knowledge in this field is still insufficient. After a survey of publications and a discussion mentioning the viewpoints of some scientists (Refs 2-16) the authors found that the assumptions proposed on the mechanism and the kinetics of the interaction of nitrous acid with the amines are manifold and contradicting. To solve the problem set the reaction mentioned in the subtitle and investigated already earlier to some extent was selected again. It can take part between the nitrosifying agents on the one hand and either the dipole (red) or anion (yellow) tropaeolin form on the other hand. The diazotizing (or nitrosifying, resp.) agents can be: free, non dissociated HNO_2, N_2O_3, $H_2NO_2^{\oplus}$ cations or $NO^{\oplus}$ etc.

Card 2/5

APPROVED FOR RELEASE: 08/31/2001 CIA-RDP86-00513R001757320001-5"

"APPROVED FOR RELEASE: 08/31/2001 CIA-RDP86-00513R001757320001-5

Kinetics of the Nitrosation of Secondary Aromatic Amines SOV/153-58-2-2/30
Communication I. Velocity of the Nitrosation of Tropaeolin in Sulfuric Acid Solutions

Of course, in all these cases several kinetic equations may be obtained that differ with respect to the specific reaction order with regard to HNO_2, $R_2\overset{(+)}{N}H_2$ • R_2NH and $H_3\overset{(+)}{O}$. The velocity of the nitrosation was determined colorimetrically with a green light filter. The reaction velocity was observed by the changes of the concentration of the red dipole form (z). Based on the experimental results and the equations derived therefrom (1) - (14) the authors arrived at the kinetic equation

$v = k'[R_2NH_2^+] \cdot [HNO_2]$ (15), which does not differ from the one derived under the assumption of the interaction between the free nitrous acid and the hybrid ion tropaeolin form. A choice between these two possible mechanisms can be made only in the case of a quantitative estimation of the values of the velocity constant, taking into account the most probable value

Card 3/5

APPROVED FOR RELEASE: 08/31/2001 CIA-RDP86-00513R001757320001-5"

"APPROVED FOR RELEASE: 08/31/2001 CIA-RDP86-00513R001757320001-5

Kinetics of the Nitrosation of Secondary Aromatic Amines. 307/[illegible]
Communication I. Velocity of the Nitrosation of Tropaeolin in Sulfuric Acid Solutions

of the equilibrium constant of the formation reaction of the nitroso cation. The authors concluded that: 1) The velocity of the nitrosation of tropaeolin in various concentrations of the nitrous acid and sulfuric acid was investigated. 2) It was found that the reaction of the nitrosation of tropaeolin is strictly reversible; the direct reaction of the nitrosation is of the first order with respect to $R_2NH_2^+$ and HNO_2, whereas the back reaction is directly proportional to the content of the nitroso tropaeolin and the H_3O^+ ions, and does not depend on the HNO_2 concentration. 3) The velocity constant of the reaction and back reaction amounted to 20° $0.35.10^4$, and 0.26 mol/1 per minute, respectively. The activation energy of the nitrosation in H_2SO_4 solutions amounts to 15 kcal/mol. 4) Assumptions were mentioned with respect to the reaction mechanism of the tropaeolin nitrosation reaction. There are 5 figures, 2 tables, and 20

Card 4/5

APPROVED FOR RELEASE: 08/31/2001 CIA-RDP86-00513R001757320001-5"

"APPROVED FOR RELEASE: 08/31/2001 CIA-RDP86-00513R001757320001-5

Kinetics of the Nitrosation of Secondary Aromatic Amines. SOV/153-58-2-3/30
Communication I. Velocity of the Nitrosation of Tropaeolin in Sulfuric Acid Solutions

references, 9 of which are Soviet.

ASSOCIATION: Dnepropetrovskiy khimiko-tekhnologicheskiy institut (Dnepropetrovsk Chemical Technical Institute) Kafedra fizicheskoy khimii (Chair of Physical Chemistry)

SUBMITTED: October 3, 1957

Card 5/5

APPROVED FOR RELEASE: 08/31/2001 CIA-RDP86-00513R001757320001-5"

"APPROVED FOR RELEASE: 08/31/2001 CIA-RDP86-00513R001757320001-5

TSYMBAL, R.M.; LOSHKAREV, M.A.; BURMISTROV, S.I.

Kinetics of nitrosation of secondary aromatic amines. Report No.1: Rate of nitrosation of tropeolin in sulfuric acid solutions. Trudy DKHTI no.6:249-261 '58. (MIRA 13:11)
(Benzenesulfonic acid) (Nitrosation)

APPROVED FOR RELEASE: 08/31/2001 CIA-RDP86-00513R001757320001-5"

"APPROVED FOR RELEASE: 08/31/2001 CIA-RDP86-00513R001757320001-5

TSYMBAL, R.M.; BURMISTROV, S.I.; LOSHKAREV, M.A.

Study of the reaction of nitrosation of amines. Report No.2: Basicity constants of azo indicators with a secondary amino group. Trudy DKHTI no.6:185-192 '58. (MIRA 13:11)
(Amines) (Nitrosation) (Indicators and test papers)

APPROVED FOR RELEASE: 08/31/2001 CIA-RDP86-00513R001757320001-5"

"APPROVED FOR RELEASE: 08/31/2001 CIA-RDP86-00513R001757320001-5

LOSHKAREV, M.A.; BURMISTROV, S.I.; TSYMBAL, R.M.

Nitrozation kinetics of secondary aromatic amines. Report No.1: Rate of nitrozation of tropeolin in sulfuric acid solutions. Izv. vys. ucheb. zav.; khim.i khim.tekh. no.2:6-16 '58. (MIRA 11:7)

1.Dnepropetrovskiy khimiko-tekhnologicheskiy institut.
(Tropeolin) (Nitroso compounds)

APPROVED FOR RELEASE: 08/31/2001 CIA-RDP86-00513R001757320001-5"

"APPROVED FOR RELEASE: 08/31/2001 CIA-RDP86-00513R001757320001-5

TSYMBAL, S.N. [TSymbal, S.M.]

Mineralogy of the reddish-brown clays of the Dnepropetrovsk province. Dop. AN URSR no.9:1215-1218 '61. (MIRA 14:11)

1. Institut geologicheskikh nauk AN USSR. Predstavleno akademikom AN USSR N.P.Semenko [Semenko, M.P.].
(Dnepropetrovsk Province—Clay)

APPROVED FOR RELEASE: 08/31/2001 CIA-RDP86-00513R001757320001-5"

"APPROVED FOR RELEASE: 08/31/2001 CIA-RDP86-00513R001757320001-5

DYADCHENKO, M.G. [Diadchenko, M.H.]; TSYMBAL, S.M. [Tsymbal, S.M.]

So-called ilmenite from the Tertiary sediments of the Samotkan' Basin. Dop. AN URSR no.12:1632-1635 '63. (MIRA 17:9)

1. Institut geologicheskikh nauk AN UkrSSR. Predstavleno akademikom AN UkrSSR M.P. Semenenko [Semenenko, M.P.].

APPROVED FOR RELEASE: 08/31/2001 CIA-RDP86-00513R001757320001-5"

"APPROVED FOR RELEASE: 08/31/2001 CIA-RDP86-00513R001757320001-5

DYADCHENKO, M.G. [Diadchenko, M.H.]; TSYMBAL, S.N. [TSymbal, S.M.]

Rutile from the Tertiary sediments of the Samotkan' Basin. Dop. AN URSR no.1:116-120 '64. (MIRA 17:4)

1. Institut geologicheskikh nauk AN UkrSSR. Predstavleno akademikom AN UkrSSR N.P.Semenenko [Semenenko, M.P.].

APPROVED FOR RELEASE: 08/31/2001 CIA-RDP86-00513R001757320001-5"

"APPROVED FOR RELEASE: 08/31/2001 CIA-RDP86-00513R001757320001-5

TSymbal, T.

Prestressed truss-plate with a span of 12 m. Stroitel' no.5:6 My '61. (MIRA 14:6)

(Beams and girders)

APPROVED FOR RELEASE: 08/31/2001 CIA-RDP86-00513R001757320001-5"

"APPROVED FOR RELEASE: 08/31/2001 CIA-RDP86-00513R001757320001-5

TSYMBAL, T.G., dotsent.

Quantity and topography of epithelial bodies in horses. Sbor. trud.Khar'.vet.inst. 20:24-28 '49. (MLRA 9:11)
(Parathyroid glands) (Horses--Anatomy)

APPROVED FOR RELEASE: 08/31/2001 CIA-RDP86-00513R001757320001-5"

"APPROVED FOR RELEASE: 08/31/2001 CIA-RDP86-00513R001757320001-5

TSYMBAL, T.G., dotsent.

Experimental and clinical observations of the insufficiency of epithelial bodies in horses. Sbor.trud.Khar'.vet.inst. 21:105-129 '52. (MLRA 9:12)

1. Kafedra normal'noy anatomii Khar'kovskogo veterinarnogo instituta.
(Parathyroid glands) (Horses--Physiology)

APPROVED FOR RELEASE: 08/31/2001 CIA-RDP86-00513R001757320001-5"

"APPROVED FOR RELEASE: 08/31/2001 CIA-RDP86-00513R001757320001-5

PUSTOVAR, Ya.P., dotsent; TSYMBAL, T.G., dotsent.

Chancroid of the orbit in a cow. Sbor.trud.Khar'.vet.inst. 21: 398-405 '52. (MLRA 9:12)

1. Kafedry patanatomii i anatomii Khar'kovskogo veterinarnogo instituta.
(Chancroid) (Eye--Cancer) (Cow diseases)

APPROVED FOR RELEASE: 08/31/2001 CIA-RDP86-00513R001757320001-5"

"APPROVED FOR RELEASE: 08/31/2001 CIA-RDP86-00513R001757320001-5

TSYMBAL, T.G., dotsent.

Epithelial bodies in small domestic ruminants. Sbor. trud. Khar'. vet. inst. 22:112-131 '54. (MIRA 9:12)

1. Kafedra anatomii sel'skokhozyaystvennykh zhivotnykh Khar'kovskogo veterinarnogo instituta.
(Sheep--Anatomy) (Goats) (Parathyroid glands)

APPROVED FOR RELEASE: 08/31/2001 CIA-RDP86-00513R001757320001-5"

"APPROVED FOR RELEASE: 08/31/2001 CIA-RDP86-00513R001757320001-5

TSYMBAL,T.G.;LITVISHKO,N.T.;

Acariasis of the ear in cattle. Zool.zhur. 34 no.6:1229-1241 N-D '55. (MLRA 9:1)

1. Kafedra parazitologii i invazionnykh bolezney i kafedra anatomii sel'skokhozyaystvennykh shivotnykh Khar'kovkogo veterinarnogo instituta.

(Cattle--Diseases and pests) (Mites)

APPROVED FOR RELEASE: 08/31/2001 CIA-RDP86-00513R001757320001-5"

"APPROVED FOR RELEASE: 08/31/2001 CIA-RDP86-00513R001757320001-5

GEL'CHINSKIY, B.Ya.; TSYMBAL, T.M.; OZEROV, D.K.; GOLIKOVA, G.V.

Using the dynamic theory in interpreting seismic material in several regions of Kazakhstan. Vop. din. teor. raspr. seism. voln no.4:7-43 '62. (MIRA 15:10)
(Kazakhstan—Seismic prospecting)

APPROVED FOR RELEASE: 08/31/2001 CIA-RDP86-00513R001757320001-5"

"APPROVED FOR RELEASE: 08/31/2001 CIA-RDP86-00513R001757320001-5

RUDAKOV, A.G.; TSYMBAL, T.M.

Some experimental investigations on the dynamic characteristics of seismic pulse generation by impact. Vop.din.teor. raspr.seism.voln. no.2:157-174 '59. (MIRA 13:5)
(Seismic prospecting)

APPROVED FOR RELEASE: 08/31/2001 CIA-RDP86-00513R001757320001-5"

"APPROVED FOR RELEASE: 08/31/2001 CIA-RDP86-00513R001757320001-5

TSYMBAL, T.N.; GEL'CHINSKIY, B.Ya.; RUDAKOV, A.G.

Main properties of a wave field, disturbed by the tracking of reflected waves, in the Surkhandar'ya Depression and problems in connection with studying it. Vop. din. teor. raspr. seism. voln no.4:61-78 '62. (MIRA 15:10)
(Surkhandar'ya Valley—Seismic prospecting)

APPROVED FOR RELEASE: 08/31/2001 CIA-RDP86-00513R001757320001-5"

"APPROVED FOR RELEASE: 08/31/2001 CIA-RDP86-00513R001757320001-5

IVANOV, A.G., inzh.; LYKOV, N.M., inzh.; SREBNYY, V.S., inzh.; TSYMBAL, V.G., inzh.

Combustion of anthracite dust with forced feed of heat to the burners. Elek.sta. 29 no.5:78-81 My '58. (MIRA 12:3)
(Anthracite coal) (Furnaces)

APPROVED FOR RELEASE: 08/31/2001 CIA-RDP86-00513R001757320001-5"

"APPROVED FOR RELEASE: 08/31/2001 CIA-RDP86-00513R001757320001-5

TSYMBAL, V.N. (Kirovograd)

Preparing double distilled water. Apt.delo 8 no.6:50 N-D '59. (MIRA 13:4)

(WATER, DISTILLED)

APPROVED FOR RELEASE: 08/31/2001 CIA-RDP86-00513R001757320001-5"

"APPROVED FOR RELEASE: 08/31/2001 CIA-RDP86-00513R001757320001-5

TSYMBAL, V.P.

Electron computer modeling of the steel decarburizing process during compressed air blowing of the bath. Izv.vys.ucheb.zav.; chern.met. 5 no.6:167-174 '62. (MIRA 15:7)

1. Sibirskiy metallurgicheskiy institut.
(Electron analog computers)
(Open-hearth process--Electromechanical analogies)

APPROVED FOR RELEASE: 08/31/2001 CIA-RDP86-00513R001757320001-5"

"APPROVED FOR RELEASE: 08/31/2001 CIA-RDP86-00513R001757320001-5

TSYMBAL, V. P.

Electronic computer modeling of steel decarburization process in open-hearth furnaces. Izv.vys.ucheb.zav.; chern.met. 5 no.4:160-169 '62. (MIRA 15:5)

1. Sibirskiy metallurgicheskiy institut.
(Open-hearth process) (Electronic analog computers)

APPROVED FOR RELEASE: 08/31/2001 CIA-RDP86-00513R001757320001-5"

"APPROVED FOR RELEASE: 08/31/2001 CIA-RDP86-00513R001757320001-5

TSYMBAL, V.P.

Possibility of automatically controlling the process of the burning out of carbon. Izv. vys. ucheb. zav.; chern. met. 6 no.2:158-164 '63. (MIRA 16:3)

1. Sibirskiy metallurgicheskiy institut.
(Open-hearth furnaces—Combustion)
(Electronic analog computers)

APPROVED FOR RELEASE: 08/31/2001 CIA-RDP86-00513R001757320001-5"

"APPROVED FOR RELEASE: 08/31/2001 CIA-RDP86-00513R001757320001-5

ACC NR: AP7001962 SOURCE CODE: UR/0120/66/000/006/0195/0196

AUTHOR: Bakalinskiy, V. P.; Bugayenko, V. V.; Tsymbal, V. P.

ORG: none

TITLE: Static digital register with visual indication

SOURCE: Pribory i tekhnika eksperimenta, no. 6, 1966, 195-196

TOPIC TAGS: computer component, computer storage device

ABSTRACT:

A simple and reliable decade register consisting of ten TKh8G glow-discharge thyratrons a (L_1—L_{10}) connected into cathode circuits of an IN-2 digital indicator tube (see Fig. 1) is described. The recording of information is performed when the pulse write signal which is applied to the first control grid of all thyratrons coincides with the write enable signal which is applied to the second control grid of a selected thyratron. When the write enable signal is applied, the coincidence write signal fires thyratron L_{10}. A potential on both the plate of L_{10} and the "zero" cathode of L_{11} drops, causing the gap between the plate and the "zero" cathode of L_{11} to fire. The digit 0 is indicated as a result. The next signal causes the corresponding thyratron and the required digit to fire. At this time the the negative voltage drop from the plate of conducting thyratron is

Card 1/3 UDC: 621.374.325.4

APPROVED FOR RELEASE: 08/31/2001 CIA-RDP86-00513R001757320001-5"

"APPROVED FOR RELEASE: 08/31/2001 CIA-RDP86-00513R001757320001-5

ACC NR: AP7001962

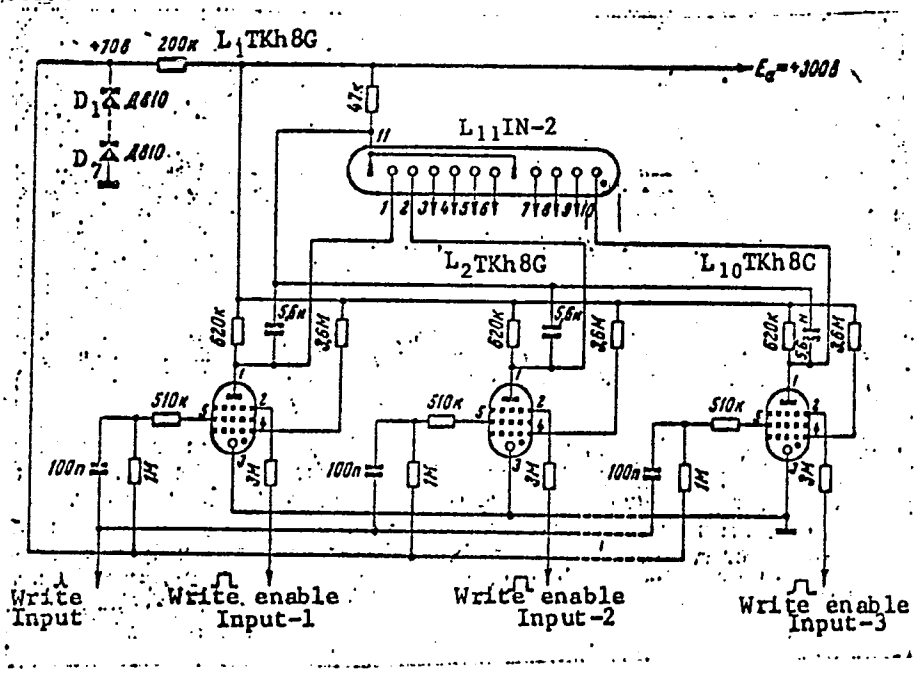

Fig. 1. Circuit of digital register

Card 2/3

APPROVED FOR RELEASE: 08/31/2001 CIA-RDP86-00513R001757320001-5"

"APPROVED FOR RELEASE: 08/31/2001 CIA-RDP86-00513R001757320001-5

ACC NR: AP7001962

simultaneously applied to the plates and all cathodes of the digital indicator tube and to the plate of conducting thyratron L_{10}. The potential on the plate of L_{10} falls below the arc-maintaining voltage of the tube, and the thyratron stops conducting. Simultaneously the discharge stops between the plate and the "zero" cathode of L_{11}. When the next pulses are applied, the process is repeated. Thus the information concerning the last input signal is always stored in the register. Operation of the circuit is stable during variations in power supply voltage from 280 to 350 v. The amplitude of the rectangular write pulses (20—40 μsec duration) which are applied to the first control grids of the thyratrons, is not less than 70 volts. The amplitude of pulses which are applied to the inputs of "write enable" can be varied from 110 to 150 volts. Orig. art. has: 1 figure.

SUB CODE: 09/ SUBM DATE: 21Dec65/ ORIG REF: 003/ ATD PRESS: 5111

Card 3/3

APPROVED FOR RELEASE: 08/31/2001 CIA-RDP86-00513R001757320001-5"

"APPROVED FOR RELEASE: 08/31/2001 CIA-RDP86-00513R001757320001-5

MEDZHIBOZHSKIY, M.Ya.; PRIVALOV, M.M.; GUROV, A.K.; MOKRUSHIN, V.V.; GRITSKOV, V.S.; Prinimali uchastiye: TSYMBAL, V.P.; BYCHKOV, P.M.; KURGUZKIN, V.P.; VALOV, M.Ye.; SHCHEKOLKIN, M.S.

Making a combined use of compressed air in a high-capacity open-hearth furnace. Stal' 22 no.10:894-900 O'62. (MIRA 15:10)
(Open-hearth furnaces) (Compressed air)

APPROVED FOR RELEASE: 08/31/2001 CIA-RDP86-00513R001757320001-5"

"APPROVED FOR RELEASE: 08/31/2001 CIA-RDP86-00513R001757320001-5

18(6) PHASE I BOOK EXPLOITATION SOV/3199

Akademiya nauk SSSR. Institut obshchey i neorganicheskoy khimii im. N. S. Kurnakova

Analiz blagorodnykh metallov (Analysis of Noble Metals) Moscow, 1959. 193 p. Errata slip inserted. 2,700 copies printed.

Resp. Ed.: N. K. Pshenitsyn, USSR Academy of Sciences, Corresponding Member; and O. Ye. Zvyagintsev, Doctor of Chemical Sciences; Eds. of Publishing Houses: T. G. Levi, and D. N. Trifonov; Tech. Ed.: I. N. Guseva.

PURPOSE: This collection of articles is for scientists engaged in the study and analysis of the noble metals.

COVERAGE: This is a collection of articles on the analysis of the noble metals. It includes studies carried out by the Institute of General and Inorganic Chemistry im. N. S. Kurnakov (AN SSSR), as well as reports presented by scientific research organizations and by industrial enterprises at the Third and Fourth Conference on Noble Metals held in 1954 and 1957, respectively. The studies and reports describe new organic reagents for gravimetric determination of platinum metals, and physicochemical methods of analysis (spectrophotometric, polarographic and potentiometric). Special attention is given to spectral analysis for the determination of admixtures in alloys of platinum metals, silver, and gold, as well as in refined noble metals. The collection also includes analytical methods, tables and charts for materials containing metals of the platinum group, as well as a review of the literature on the analysis of platinum metals published in the last five years. No personalities are mentioned. References follow each chapter.

Pshenitsyn, N. K., K. A. Gladyshevskaya and L. N. Ryakhova. Use of the Ion Exchange Method in the Analysis of Platinum Metals. Report 2. Separation of Rhodium from Iridium 103

Anisimov, S. M., Ye. I. Nikitina and V. N. Alyanchikova. Methods of Preparing Poor Industrial Solutions and Obtaining From Them Cemented Substances for the Determination of Platinum Metals by Spectral Analysis 115

Khrapay, V. P. Spectral Method for the Determination of Platinum, Palladium, and Tellurium in Silver-gold Alloys 128

Pankratova, M. I. and A. D. Gut'ko. Spectral Method of Analysis for Refined Iridium and Ruthenium 133

Kuranov, A. A., N. P. Rukaba and M. M. Syiridova. Spectral Determination of Admixtures in Gold, Silver and Alloys 139

Kuranov, A. A. Spectral Analysis of Platinum Alloys Containing Three Components 143

Adakhovskiy, A. P. and V. M. Karbolin. Determining the Chemical Composition of Binary Alloys by the Thermoelectromotive Force 145

Avilov, V. B. Effect of Complexation and of the Acid-Alkali Balance in the Medium on the Potential of the Au^{III}/Au^{o}, Au^{I}/Au^{o}, Au^{III}/Au^{I}, and Ag^{I}/Ag^{o} Systems 150

Avilov, V. B. and V. V. Kosova. Chromatometric Determination of Gold 156

Anisimov, S. M., V. M. Klypenkov and V. P. Tarasov. Electrometric Method for the Determination of Silver in Silver and Lead Alloys Containing Platinum Metals 163

Yufa, T. P. and M. A. Chentsova. Dissolving Platinum Metals and Their Alloys With the Aid of an Alternating Current 176

Chentsova, M. A., T. P. Yufa and V. G. Levian. New Method for the Analysis of Palladium-silver Alloys 181

Ruzhnikov, M. S. and K. S. Sheina. Methods of Testing Palladium Alloys and Their Products on a Touchstone and by Chemical Means 184

APPROVED FOR RELEASE: 08/31/2001 CIA-RDP86-00513R001757320001-5"