"APPROVED FOR RELEASE: 08/09/2001 CIA-RDP86-00513R001858620014-6

ATROSHCHENKO, Vasiliy Ivanovich; ALEKSEYEV, Arkadiy Mefodiyevich; ZASORIN, Anatoliy Petrovich; KIRILLOV, Ivan Petrovich; KONVISAR, Viktor Ivanovich; YASTREBENETSKIY, Anisim Rudol'fovich; VVEDENSKIY, P.I., prof., retsenzent; VARLAMOV, M.L., prof., retsenzent; BAZILYANSKAYA, I.L., red.; TROFIMENKO, A.S., tekhn. red.

[Technology of combined nitrogen] Tekhnologiia sviazannogo azota [By] V.I.Atroshchenko i dr. Khar'kov, Izd-vo Khar'kovskogo univ. 1962. 322 p. (MIRA 17:1)

APPROVED FOR RELEASE: 08/09/2001 CIA-RDP86-00513R001858620014-6"

"APPROVED FOR RELEASE: 08/09/2001 CIA-RDP86-00513R001858620014-6

AUTHOR: Varlamov, M. L., Manakin, G. A., Gospodinov, A. N.

TITLE: Investigation of an improved high-power gas stream sound generator

APPROVED FOR RELEASE: 08/09/2001 CIA-RDP86-00513R001858620014-6"

"APPROVED FOR RELEASE: 08/09/2001 CIA-RDP86-00513R001858620014-6

was determined when the radiation power of the generator is maximal

Card 2/2

APPROVED FOR RELEASE: 08/09/2001 CIA-RDP86-00513R001858620014-6"

"APPROVED FOR RELEASE: 08/09/2001 CIA-RDP86-00513R001858620014-6

VARLAMOV, M.L., doktor tekhn. nauk, prof.; MANAKIN, G.A.; STAROSEL'SKIY, Ya.I.; ZBROZHEK, L.S.

Analyzing the ammonia method for the removal of nitrogen oxides from the exhaust gases of a nitrose tower sulfuric acid system. Report No.1. Nauch. zap. Od. politekh. inst. 40:24-33 '62.

Analyzing the ammonia method for the removal of nitrogen oxides from the exhaust gases of a nitrose tower sulfuric acid system. Report No.2. Ibid.:34-44 (MIRA 17:6)

1. Predstavlena kafedroy "Tekhnologiya i avtomatizatsiya khimicheskikh proizvodstv" Odesskogo politekhnicheskogo instituta.

APPROVED FOR RELEASE: 08/09/2001 CIA-RDP86-00513R001858620014-6"

"APPROVED FOR RELEASE: 08/09/2001 CIA-RDP86-00513R001858620014-6

VARLAMOV, M.L., doktor tekhn. nauk, prof.; KRICHEVSKAYA, Ye.L.; KOVNATSKAYA, B.S.; MANAKIN, G.A.; LIMONOV, V.Ye.; ENNAN, A.A.; KOZAKOVA, L.M.; ZBROZHEK, L.S.

Study of the absorption towers of the granulation shops of a superphosphate plant. Nauch. zap. Od. politekh. inst. 40: 62-72 '62. (MIRA 17:6)

APPROVED FOR RELEASE: 08/09/2001 CIA-RDP86-00513R001858620014-6"

"APPROVED FOR RELEASE: 08/09/2001 CIA-RDP86-00513R001858620014-6

VARLAMOV, M.L., doktor tekhn. nauk, prof.; ENNAN, A.A.; KOZAKOVA, L.M.

Rapid method for determining the quality of the performance of electric filters. Nauch. zap. Od. politekh. inst. 40:73-76 '62. (MIRA 17:6)

1. Predstavlena kafedroy "Tekhnologiya i avtomatizatsiya khimicheskikh proizvodstv" Odesskogo politekhnicheskogo instituta.

APPROVED FOR RELEASE: 08/09/2001 CIA-RDP86-00513R001858620014-6"

"APPROVED FOR RELEASE: 08/09/2001 CIA-RDP86-00513R001858620014-6

ENNAN, A.A.; VARLAMOV, M.L., doktor tekhn. nauk, prof.; KOZAKOVA, L.M.; ERAYZER, L.N.

Determining the drop contact angles and coefficients of the drop spreading of the aqueous solutions of fluosilicic acids and sodium fluorides. Nauch. zap. Od. politekh. inst. 40: 77-82 '62. (MIRA 17:6)

1. Predstavlena kafedroy "Tekhnologiya i avtomatizatsiya khimicheskikh proizvodstv" Odesskogo politekhnicheskogo instituta.

APPROVED FOR RELEASE: 08/09/2001 CIA-RDP86-00513R001858620014-6"

"APPROVED FOR RELEASE: 08/09/2001 CIA-RDP86-00513R001858620014-6

LIMONOV, V.Ye.; VARLAMOV, M.L.

Fog formation due to the interaction between SiF_4 and moist air. Nauch. zap. Od. politekh. inst. 41:3-9 '62. (MIRA 17:4)

APPROVED FOR RELEASE: 08/09/2001 CIA-RDP86-00513R001858620014-6"

"APPROVED FOR RELEASE: 08/09/2001 CIA-RDP86-00513R001858620014-6

VARLAMOV, M.L.; BRIENAVICHYUS, K.K.; MANAKIN, G.A.; Prim'mali uchastiye: POLUKHINA, T.I.; KHODAKOVSKIY, V.V.; GORSHKOVA, L.V.; TUL'CHINSKAYA, K.V.; TSITKO, A.S.; SHELAMOV, V.A.

Removal of phthalic anhydride from the waste gases in the production of glyptal and pentaphthalic varnishes. Nauch. zap. Od. politekh. inst. 41:10-21 '62. (MIRA 17:4)

APPROVED FOR RELEASE: 08/09/2001 CIA-RDP86-00513R001858620014-6"

"APPROVED FOR RELEASE: 08/09/2001 CIA-RDP86-00513R001858620014-6

VARLAMOV, M.L.; MANAKIN, G.A.; STAROSEL'SKIY, Ya.I.; ZBROZHEK, L.S.

Ammonia method for the removal of nitrogen oxides of low concentration from gases. Zhur.prikl.khim. 36 no.1:8-15 Ja '63. (MIRA 16:5)
(Gases--Purification) (Nitrogen oxides)
(Ammonia)

APPROVED FOR RELEASE: 08/09/2001 CIA-RDP86-00513R001858620014-6"

"APPROVED FOR RELEASE: 08/09/2001 CIA-RDP86-00513R001858620014-6

VARLAMOV, M.I.; BELENAVICHYUS, K.K. [Belenavicius, K.]

Study of the acoustical coagulation of a hydrochloric acid aerosol. Zhur. prikl. khim. 36 no.4:697-703 Ap '63. (MIRA 16:7)

(Aerosols--Acoustic properties)
(Hydrochloric acid)

APPROVED FOR RELEASE: 08/09/2001 CIA-RDP86-00513R001858620014-6"

"APPROVED FOR RELEASE: 08/09/2001 CIA-RDP86-00513R001858620014-6

VARLAMOV, M.L.; MANAKIN, G.A.; ZBROZHEK, L.S.; STAROSEL'SKIY, Ya.I.; Prinimala uchastiye: TSITKO, A.S.

Ammonia method for the removal of nitrogen oxides from the waste gases of the tower nitroso-sulfuric system. Zhur. prikl. khim. 36 no.11:2335-2343 N '63. (MIRA 17:1)

APPROVED FOR RELEASE: 08/09/2001 CIA-RDP86-00513R001858620014-6"

"APPROVED FOR RELEASE: 08/09/2001 CIA-RDP86-00513R001858620014-6

L 1726-66 EWT(1)/FCC GW

ACCESSION NR: AP5021180 UR/0139/65/000/004/0129/0133

AUTHOR: Varlamov, M. L.; Manakin, G. A.; Ennan, A. A.

TITLE: Investigation of acoustic coagulation of aqueous fog subjected to continuous and pulsed sound

SOURCE: IVUZ. Fizika, no. 4, 1965, 129-133

TOPIC TAGS: aerosol, natural aerosol, fog, acoustic coagulation, aerosol chamber

ABSTRACT: In view of the lack of theoretical means of predicting the effects of acoustic coagulation on various aerosols, the authors used specially designed apparatus to determine experimentally the major coagulation parameters (number of particles per unit volume and size distribution of the particles). Most of the apparatus, the formulas for the particle-size distribution, and the procedure for the experimental-data reduction have been described in earlier papers by the authors and their co-workers (Sb. Primeneniye ultraakustiki k issledovaniyu veschestva [Use of ultrasonics in materials research], no. 17, MOPI, M., 1963, and earlier references). Formulas are presented for determining the aerosol concentrations at the outlet of an aerosol chamber in terms of the time spent by the aerosol in the chamber and in terms of the pulse repetition frequency (pulsed sound only). The results have established that pulsed sound at a frequency of 16.5 kcs, a pulse

Card 1/2

APPROVED FOR RELEASE: 08/09/2001 CIA-RDP86-00513R001858620014-6"

"APPROVED FOR RELEASE: 08/09/2001 CIA-RDP86-00513R001858620014-6

L 1726-66

ACCESSION NR: AP5021180

repetition frequency of 2 pulses/sec, a reduced pulse duty factor of 2, and a total exposure of 3—5 seconds consumes approximately half of the acoustic energy required in the case of continuous sound. Orig. art. has: 4 figures and 5 formulas. [02]

ASSOCIATION: Odesskiy politekhnicheskiy institut (Odessa Polytechnic Institute)

SUBMITTED: 03Oct63 ENCL: 00 SUB CODE: ES

NO REF SOV: 005 OTHER: 000 ATD PRESS: 4095

Card 2/2

APPROVED FOR RELEASE: 08/09/2001 CIA-RDP86-00513R001858620014-6"

"APPROVED FOR RELEASE: 08/09/2001 CIA-RDP86-00513R001858620014-6

L 9860-66 EWT(1)/EEC(k)-2/EWA(h)/ETC(m) WW

ACC NR: AP6001003 SOURCE CODE: UR/0286/65/000/022/0071/0071

44,55 44,55 44,55

INVENTOR: Varlamov, M. L.; Manakin, G. A.; Tonkonogiy, Sh. B.

32
23

ORG: none

TITLE: Acoustic wattmeter. 25 Class 42, No. 176451.

SOURCE: Byulleten' izobreteniy i tovarnykh znakov, no. 22, 1965, 71

21,44,55

TOPIC TAGS: wattmeter, acoustic wattmeter

ABSTRACT: This Author Certificate proposes an acoustic wattmeter containing an acoustic pickup and a millivoltmeter for measuring the power of acoustic generators. To increase both the measurement accuracy and speed, the pickup is mounted on a mobile base which can be shifted by two drives at a constant linear velocity in a plane perpendicular to the sound propagation. An amplifier, a functional transducer, an integrator, and relay block contacts are connected in series to the output of the millivoltmeter. The relay block contacts assure simultaneous coupling of the acoustic pickup drives, the electric timer, the integrator, and the recording instruments. Orig. art. has: 1 figure. [JR]

SUB CODE: 09, 14/ SUBM DATE: 23Sep63/ ATD PRESS: 4165

PC

Card 1/1 UDC: 534.613:621.317.784

APPROVED FOR RELEASE: 08/09/2001 CIA-RDP86-00513R001858620014-6"

"APPROVED FOR RELEASE: 08/09/2001 CIA-RDP86-00513R001858620014-6

VARLAMOV, M.L.; MANAKIN, G.A.; ENNAN, A.A.; Prinimala uchastiye: KOZAKOVA, L.M.

Acoustic coagulation of water fog in continuous pulse type sonication. Izv. vys ucheb. zav.; fiz. 8 no.4:129-133 '65. (MIRA 18:12)

1. Odesskiy politekhnicheskiy institut. Submitted October 3, 1963.

APPROVED FOR RELEASE: 08/09/2001 CIA-RDP86-00513R001858620014-6"

"APPROVED FOR RELEASE: 08/09/2001 CIA-RDP86-00513R001858620014-6

VARLAMOV, M.L.; KORDON, I.V.

Conductometric determination of lower concentrations of ammonia in gases. Zav. lab. 31 no.8:940-943 '65. (MIRA 18:9)

1. Odesskiy politekhnicheskiy institut.

APPROVED FOR RELEASE: 08/09/2001 CIA-RDP86-00513R001858620014-6"

"APPROVED FOR RELEASE: 08/09/2001 CIA-RDP86-00513R001858620014-6

ACC NR: AP6034921 SOURCE CODE: UR/0115/66/000/008/0092/0093

AUTHORS: Varlamov, M. L.; Gospodinov, A. N.; Breytbart, G. Ya.

ORG: none

TITLE: A thermoelectric receiver for sound in gaseous media

SOURCE: Izmeritel'naya tekhnika, no. 8, 1966, 92-93

TOPIC TAGS: thermoelectric sensor, thermocouple, acoustic field, gas, temperature, galvanometer, turbulent flow, air flow / M21 4 galvanometer

ABSTRACT: A thermoelectric receiver for measuring sound intensity in acoustic fields created by powerful gas-jet radiators is described. The receiver is made in the form of a probe (see Fig. 1): a copper or brass tube with a length of 70 mm and outside and inside diameters of 4.5 and 2.5 mm. Two copper-constantan thermocouple junctions with a 0.1-mm wire are placed along its axis. The temperature-difference setting time is not over 15--20 sec. The maximum temperature difference that can be recorded is ~ 5C. For one specimen of the probe, at a sound intensity of 0.55 W/cm^2 (157.4 dB) and a frequency of 17.5 kHz, the deflection of the M21/4 galvanometer was 250 divisions. It was found that the readings of the probe were not dependent upon the relative humidity of the air, but only upon its rate of change. The probe distorts the acoustic field only slightly.

Card 1/2 UDC: 534.615

APPROVED FOR RELEASE: 08/09/2001 CIA-RDP86-00513R001858620014-6"

"APPROVED FOR RELEASE: 08/09/2001 CIA-RDP86-00513R001858620014-6

ACC NR: AP6034921

Fig. 1. Thermoelectric probe: 1 - tube;
2 and 3 - thermocouple junctions;
4 - sound-absorbing substance;
5 - working end

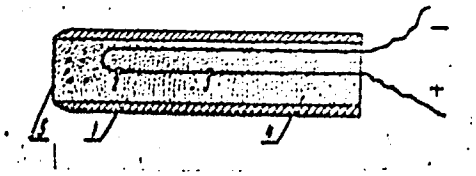

Orig. art. has: 1 diagram and 1 graph.

SUB CODE: 20, 14, 09/ SUBM DATE: none/ ORIG REF: 003/ OTH REF: 003

Card 2/2

APPROVED FOR RELEASE: 08/09/2001 CIA-RDP86-00513R001858620014-6"

"APPROVED FOR RELEASE: 08/09/2001 CIA-RDP86-00513R001858620014-6

SMIRNOV, A.I.; VARLAMOV, M.L.; BROVKINA, Ye.P.; MANAKIN, G.A.

Using sulfurous cast iron for making teeth of mechanical pyrite furnaces. Nauch.zap.Od.politekh.inst. 26:65-72 '60. (MIRA 15:5)
(Cast iron) (Metallurgical furnaces)

APPROVED FOR RELEASE: 08/09/2001 CIA-RDP86-00513R001858620014-6"

"APPROVED FOR RELEASE: 08/09/2001 CIA-RDP86-00513R001858620014-6

ACC NR: AP6020184 (A) SOURCE CODE: UR/0416/66/000/006/0073/0076

AUTHOR: Varlamov, N. (Candidate of technical sciences, Engineer, Lieutenant colonel); Kotyurgin, F. (Candidate of military sciences, Docent, Colonel)

ORG: None

TITLE: Automated transport control system

SOURCE: Tyl i snabzheniye sovetskikh vooruzhennykh sil, no. 6, 1966, 73-76

TOPIC TAGS: transportation system, armed force logistics

ABSTRACT: The modern methods of planning, organizing and controlling military transportation operations are described. The planning and implementation of various processes including the use of facilities and the movement of materiel are based on a careful examination of given data and prevalent conditions. The analysis of processes and the modeling of operations are carried out by using computing devices for solving mathematical problems involved in a given transportation system. An example of a system modeling is shown schematically in a diagram. The system includes five processes of which the first represents the enemy actions against the transportation network, facilities and vehicles. The second process covers the determination of the reliability of the transportation system in a given area, while the third deals with the analysis and selection of routes, networks, facilities, materials and other system components. The determination of route distances, vehicle speeds, time schedules, loading and unloading operations belongs to

Card 1/2

APPROVED FOR RELEASE: 08/09/2001 CIA-RDP86-00513R001858620014-6"

"APPROVED FOR RELEASE: 08/09/2001 CIA-RDP86-00513R001858620014-6

ACC NR: AP6028184

the fourth series of mathematical calculations. The method of mathematical statistics is also applied to the fifth process of calculation including checking and correlating standard norms, time factors and other transportation parameters. It is stressed that the same system of units and conversion factors must be used for calculation and evaluation of transportation processes. The same criteria must also be used for selection of basic optimal data such as time limits, transport types, expenditures, etc. In general, various keyboard, punched-card and electronic computors are used for calculation. An intercommunication system is established for collecting and transmitting data as well as for an overall control of transportation operations. Orig. art. has: 1 diagram.

SUB CODE: 15/ SUBM DATE: None

APPROVED FOR RELEASE: 08/09/2001 CIA-RDP86-00513R001858620014-6"

"APPROVED FOR RELEASE: 08/09/2001 CIA-RDP86-00513R001858620014-6

VARLAMOV, N.A.; KOSTIN, I.M., kand. tekhn. nauk; SHOKHIN, V.P., kand. tekhn. nauk

Centrifugal dressing of oxidized iron ores in hydraulic cyclones. Biul. tekh.-ekon. inform. Gos. nauch.-issl. inst. nauch. i tekh. inform. 17 no.8:7-8 Ag '64.

(MIRA 17:11)

APPROVED FOR RELEASE: 08/09/2001 CIA-RDP86-00513R001858620014-6"

"APPROVED FOR RELEASE: 08/09/2001 CIA-RDP86-00513R001858620014-6

VARLAMOV, N.A., inzh.; SHOKHIN, V.N., inzh.; NIKOLENKO, S.V.; TIMAKOV, G.I.

Experience in obtaining iron ore concentrates in a hydrocyclone. Gor. zhur. no.1:75-77 Ja '64. (MIRA 17:3)

1. Magnitogorskiy gornometallurgicheskiy institut (for Varlamov, Shokhin). 2. Gornoye upravleniye Magnitogorskogo metallurgicheskogo kombinata (for Nikolenko, Timakov).

APPROVED FOR RELEASE: 08/09/2001 CIA-RDP86-00513R001858620014-6"

"APPROVED FOR RELEASE: 08/09/2001 CIA-RDP86-00513R001858620014-6

VARLAMOV, N.A.; SHOKHIN, V.N.; BELYKH, L.P.

Dressing Lisakovka ores in a hydrocyclone with a magnetite suspension. Gor. zhur. no.8:67-70 Ag '64. (MIRA 17:10)

1. Magnitogorskiy gornometallurgicheskiy institut.

APPROVED FOR RELEASE: 08/09/2001 CIA-RDP86-00513R001858620014-6"

"APPROVED FOR RELEASE: 08/09/2001 CIA-RDP86-00513R001858620014-6

Translation from: Referativnyy zhurnal. Mekhanika, 1957, Nr 4, p 67 (USSR) SOV/124-57-4-4321

AUTHOR: Varlamov, N.N.

TITLE: Kinematic Aspects of the Interaction Between a Vessel and the Deflecting Pier Walls (Kinematicheskaya kartina vzaimodeystviya sudna s napravlyayushchim ustroystvom)

PERIODICAL: Tr. Leningr. in-ta inzh. vod. transp., 1955, Nr 22, pp 80-88

ABSTRACT: Two elementary impact problems are examined: 1) An incompletely elastic collision between a body and a stationary rigid surface (impact of a vessel against a barrier); 2) an incompletely elastic collision between two bodies one of which is at rest (impact of a vessel against a pontoon). All computations are elementary and are applications of well-known propositions of the impact theory.

A. K. Nikitin

Card 1/1

APPROVED FOR RELEASE: 08/09/2001 CIA-RDP86-00513R001858620014-6"

"APPROVED FOR RELEASE: 08/09/2001 CIA-RDP86-00513R001858620014-6

VARLAMOV, N. S.

VARLAMOV, N. S.- "Investigation of the Effects of the Clearances on the Efficiency of an Encased Turbine Stage." Min of Heavy Machinebuilding USSR, Central Sci Res Boiler and Turbine Inst imeni I. I. Polzunov (TsKTI), Leningrad 1955 (Dissertations For Degree of Candidate of Technical Sciences)

SO: Knizhnaya Letopis' No. 26, June 1955, Moscow

APPROVED FOR RELEASE: 08/09/2001 CIA-RDP86-00513R001858620014-6"

"APPROVED FOR RELEASE: 08/09/2001 CIA-RDP86-00513R001858620014-6

VARLAMOV, N.S., kandidat tekhnicheskikh nauk.

Effect of axial clearance on stage efficiency. Energomashinostroenie no.2:10-15 F '56. (MLRA 9:6)
(Turbines)

APPROVED FOR RELEASE: 08/09/2001 CIA-RDP86-00513R001858620014-6"

"APPROVED FOR RELEASE: 08/09/2001 CIA-RDP86-00513R001858620014-6

VARLAMOV, N.S., kandidat tekhnicheskikh nauk; MARKOV, N.M., kandidat tekhnicheskikh nauk.

Some results of the experimental investigation of turbine stages. Sudostroenie 22 no.8:7-10 Ag '56. (MLRA 9:10)

(Steam turbines--Testing)

APPROVED FOR RELEASE: 08/09/2001 CIA-RDP86-00513R001858620014-6"

"APPROVED FOR RELEASE: 08/09/2001 CIA-RDP86-00513R001858620014-6

MIRONOL'SKIY, Ye.A.; VARLAMOV, N.S.

High-speed motion-picture photography in investigating processes and equipment for forging and die stamping. Kuz.-shtam.proizv. 5 no.5:43-47 My '63. (MIRA 16:9)

APPROVED FOR RELEASE: 08/09/2001 CIA-RDP86-00513R001858620014-6"

"APPROVED FOR RELEASE: 08/09/2001 CIA-RDP86-00513R001858620014-6

VARLAMOV, N.V.

VARLAMOV, N.V., inzhener.

Over-all mechanization of quarrying. Avt.dor. 20 no.6:6-7 Je '57. (MIRA 10:10)

(Road construction)

APPROVED FOR RELEASE: 08/09/2001 CIA-RDP86-00513R001858620014-6"

"APPROVED FOR RELEASE: 08/09/2001 CIA-RDP86-00513R001858620014-6

VARLAMOV, N.V., inzhener.

Experience in solidifying embankments under field control conditions. Avt.dor.20 no.1:10-12 Ja '57. (MIRA 10:3)
(Embankments)

APPROVED FOR RELEASE: 08/09/2001 CIA-RDP86-00513R001858620014-6"

"APPROVED FOR RELEASE: 08/09/2001 CIA-RDP86-00513R001858620014-6

VARLAMOV, N.V.

VARLAMOV, N.V., inzh.

Experience in constructing a road earthbed for the Moscow-Leningrad Highway. Avt.dor. 20 no.11(181):16-19 N '57.

(Road construction) (MIRA 10:12)
(Earthwork)

APPROVED FOR RELEASE: 08/09/2001 CIA-RDP86-00513R001858620014-6"

"APPROVED FOR RELEASE: 08/09/2001 CIA-RDP86-00513R001858620014-6

VARLAMOV, N.V., inzh.

Necessity for a more precise definition of specifications for soil compaction. Avt.dor. 21 no.6:11 Je '58. (MIRA 12:10)

(Soil stabilization) (Road construction)

APPROVED FOR RELEASE: 08/09/2001 CIA-RDP86-00513R001858620014-6"

"APPROVED FOR RELEASE: 08/09/2001 CIA-RDP86-00513R001858620014-6

VARLAMOV, N.V., inzh.

Work of excavator operators in composite units. Avt. dor. 22 no.9: 14 S '59. (MIRA 12:12)

(Earthwork)

APPROVED FOR RELEASE: 08/09/2001 CIA-RDP86-00513R001858620014-6"

"APPROVED FOR RELEASE: 08/09/2001 CIA-RDP86-00513R001858620014-6

VARLAMOV, N.V., kand. tekhn. nauk

Using the Ural-1 and Minsk-1 electronic computers in planning the organization of road construction. Avt. dor. 28 no.9:22 S '65. (MIRA 18:10)

APPROVED FOR RELEASE: 08/09/2001 CIA-RDP86-00513R001858620014-6"

"APPROVED FOR RELEASE: 08/09/2001 CIA-RDP86-00513R001858620014-6

VARLAMOV, N.Ye.

Using the correlative relations between landform elements for the identification of the soils of the Volga-Akhtubinsk floodplain in soil improvement research. Vest. Mosk. un. Ser. 5: geog. 16 no.6: 30-34 N-D '61. (MIRA 14:11)

1. "Yuzhgiprovodkhoz", Rostov-na-Donu.
(Volga Valley--Alluvial lands)

APPROVED FOR RELEASE: 08/09/2001 CIA-RDP86-00513R001858620014-6"

VARLAMOV, N.Ye.

Landform studies and land reclamation research. Vest. Mosk. un. Ser. 5: Geog. 18 no.3:30-32 My-Je '63. (MIRA 16:6)

1. Yuzhnyy gosudarstvennyy institut po proyektirovaniyu vodnogo khozyaystva, Rostov-na-Donu.
(Landforms) (Reclamation of land)

"APPROVED FOR RELEASE: 08/09/2001 CIA-RDP86-00513R001858620014-6

VARLAMOV, P.S.

Breaking rock with a three roller bit. Neft.khoz. 39 no.8:18-20 Ag '61. (MIRA 14:7)

(Rock drills)

APPROVED FOR RELEASE: 08/09/2001 CIA-RDP86-00513R001858620014-6"

"APPROVED FOR RELEASE: 08/09/2001 CIA-RDP86-00513R001858620014-6

VARLAMOV, P.S.

Qualitative and quantitative evaluation of prospective horizons according to the data obtained by sampling with a formation tester on a cable. Burenie no.10:29-33 '67. (MIRA 18:6)

1. Groznenskiy neftyanoy nauchno-issledovatel'skiy institut.

APPROVED FOR RELEASE: 08/09/2001 CIA-RDP86-00513R001858620014-6"

"APPROVED FOR RELEASE: 08/09/2001 CIA-RDP86-00513R001858620014-6

VERLANOV, P. .

Using formation testers lowered into a well on a cable. Sorenie no.11:16-19 '64. (MIRA 18:5)

1. Groznenskiy neftyanoy nauchno-issledovatel'skiy institut.

APPROVED FOR RELEASE: 08/09/2001 CIA-RDP86-00513R001858620014-6"

"APPROVED FOR RELEASE: 08/09/2001 CIA-RDP86-00513R001858620014-6

8(3)

05416
SOV/107-59-8-36/49

AUTHOR: Varlamov, R.

TITLE: Small-Size Transformers for Transistorized Equipment

PERIODICAL: Radio, 1959, Nr 8, pp 46 - 47 (USSR)

ABSTRACT: The use of permalloy cores brings about a reduction in the size of transformer dimensions which is important for small-size LF amplifiers built by amateurs. The author describes one intermediate and one output transformer giving details of coils and cores. There are 13 diagrams, 1 graph and 1 table.

Card 1/1

APPROVED FOR RELEASE: 08/09/2001 CIA-RDP86-00513R001858620014-6"

"APPROVED FOR RELEASE: 08/09/2001 CIA-RDP86-00513R001858620014-6

6(4)

06276
SOV/107-59-6-40/50

AUTHOR: Varlamov, R.

TITLE: A Transistorized Superheterodyne

PERIODICAL: Radio, 1959, Nr 6, pp 48-50 (USSR)

ABSTRACT: The author describes a medium wave superheterodyne receiver with nine transistors. The sensitivity of the receiver is 1.5-2 millivolts. The output power is 0.2 watts with a 14% nonlinear distortion. The circuit diagram of the receiver is shown in Figure 2. In the r-f stage three P6V transistors are used. The other stages are composed of P6G transistors. However, transistors P1I may be used in the r-f and i-f stages, while P1V and P2 may be installed in the LF amplifier. A tapped-coil oscillator with inductive feedback is used in the r-f stage. Reception of stations in the 550-1500 kc range is achieved by a built-in ferrite antenna or an external wire antenna which is plugged

Card 1/2

APPROVED FOR RELEASE: 08/09/2001 CIA-RDP86-00513R001858620014-6"

"APPROVED FOR RELEASE: 08/09/2001 CIA-RDP86-00513R001858620014-6

06276

SOV/107-59-6-40/50

A Transistorized Superheterodyne

into the antenna socket. The power is provided by four FBS-0.25 batteries. The i-f frequency is 465 kc. The receiver may be installed into a housing of 177 x 88 x 50 mm. There are 1 circuit diagram, 2 diagrams and 1 table.

Card 2/2

APPROVED FOR RELEASE: 08/09/2001 CIA-RDP86-00513R001858620014-6"

"APPROVED FOR RELEASE: 08/09/2001 CIA-RDP86-00513R001858620014-6

VARLAMOV, R., inzh.

Condenser made...of razor blades. IUn.tekh. 4 no.3:74-77 Mr '60. (MIRA 13:6)

(Electric capacitors)

APPROVED FOR RELEASE: 08/09/2001 CIA-RDP86-00513R001858620014-6"

"APPROVED FOR RELEASE: 08/09/2001 CIA-RDP86-00513R001858620014-6

VARLAMOV, R., inzh.

Tester for semiconductors. IUn.tekh. 4 no.8:48b-48c Ag '60. (MIRA 13:9)

(Transistors--Testing)

APPROVED FOR RELEASE: 08/09/2001 CIA-RDP86-00513R001858620014-6"

"APPROVED FOR RELEASE: 08/09/2001 CIA-RDP86-00513R001858620014-6

9(2), 6(4)

S/107/60/000/04/039/045
D047/D006

AUTHOR: Varlamov, R.

TITLE: A Two-Plate Plastic-Film Capacitor

PERIODICAL: Radio, 1960, Nr 4, pp 49-52 (USSR)

ABSTRACT: This describes two types of tuning capacitors with a film dielectric for use in portable transistor receivers with straight amplification and for superheterodynes. The single-section capacitor is 13 x 18 x 40 mm, weighs 15 g and has a minimum capacity of 3-4.5 microfarads and a maximum of 200-400. The two-section capacitor has a minimum capacity of 4-5 micromicrofarads, a maximum of 200-300 in each section, is 13 x 33 x 40 mm, and weighs 28 g. In both types films of various materials 1-10 microns thick are used as the dielectric.

Card 1/4

APPROVED FOR RELEASE: 08/09/2001 CIA-RDP86-00513R001858620014-6"

"APPROVED FOR RELEASE: 08/09/2001 CIA-RDP86-00513R001858620014-6

S/107/60/000/04/039/045
D047/D006

A Two-Plate Plastic-Film Capacitor

The specific capacity values (micromicrofarad/cm^2) for these materials and oxide films on aluminium are shown in a table, with the maximum permissible thickness, which is limited by the mechanical strength. The stator is in the form of a segment with a dielectric covering of one of the given meterials or coated with oxide film and is tightly fitted by the rotor, which is tensed by a flat spring. To fix the position of the rotor and stator the device must be fitted into a box with guiding walls. Fig. 1 shows the capacitor, fig. 2 - how it operates. In the first stage, when there is no contact between rotor and stator, capacity is determined by the area of the plates

Card 2/4

APPROVED FOR RELEASE: 08/09/2001 CIA-RDP86-00513R001858620014-6"

"APPROVED FOR RELEASE: 08/09/2001 CIA-RDP86-00513R001858620014-6

S/107/60/000/04/039/045
D047/D006

A Two-Plate Plastic-Film Capacitor

and the air space between them. In the subsequent stages, when the rotor approaches the stator and begins to hug it, capacity is determined by the delectric penetrability of the film, its thickness and the contact surface of the plates. The Q-factor for these capacitors may be identical with that of the coil. The Q-factor for ceramic KPK capacitors is considerably higher than that of the coil, but the two-plate capacitors described may still be used in receivers and in small-scale portable transistor models particularly. Full instructions are given for making the capacitors. Oxidation of the rotor can be done by amateurs. Aluminium plates (aluminium alloy

Card 3/4

APPROVED FOR RELEASE: 08/09/2001 CIA-RDP86-00513R001858620014-6"

"APPROVED FOR RELEASE: 08/09/2001 CIA-RDP86-00513R001858620014-6

S/107/60/000/04/039/045
D047/D006

A Two-Plate Plastic-Film Capacitor

D1) with a clean surface are scoured with benzine, washed in OP-7 or OP-10 solvent and placed in a solution of oxalic acid (15 g to 0.5 l of water). Capacitors with a dielectric of paper from KBG-I capacitors may be used for straight amplification receivers only. There is 1 diagram, 4 sets of diagrams, 3 graphs and 1 table.

Card 4/4

APPROVED FOR RELEASE: 08/09/2001 CIA-RDP86-00513R001858620014-6"

"APPROVED FOR RELEASE: 08/09/2001 CIA-RDP86-00513R001858620014-6

VARLAMOV, R., inzh.

Transformer for miniature radio receivers. IUn. tekh. 4 no.8:56-57 Ag '60. (MIRA 13:9)

(Radio—Receivers and reception)
(Electric transformers)

APPROVED FOR RELEASE: 08/09/2001 CIA-RDP86-00513R001858620014-6"

"APPROVED FOR RELEASE: 08/09/2001 CIA-RDP86-00513R001858620014-6

VARLAMOV, R.

Rebuilding automobile receivers. Radio no.6:45-46 Je '60.
(Radio—Receivers and reception) (MIRA 13:7)

APPROVED FOR RELEASE: 08/09/2001 CIA-RDP86-00513R001858620014-6"

"APPROVED FOR RELEASE: 08/09/2001 CIA-RDP86-00513R001858620014-6

VARLAMOV, R.

Choice of capacitor size. Radio no.12:20-21 D '60. (MIRA 14:1)
(Electric capacitors)

APPROVED FOR RELEASE: 08/09/2001 CIA-RDP86-00513R001858620014-6"

"APPROVED FOR RELEASE: 08/09/2001 CIA-RDP86-00513R001858620014-6

VARLAMOV, R., inzh.

Miniature electronic equipment. IUn.tekh. 5 no.1:33-37 Ja '61. (MIRA 14:5)

(Miniature electronic equipment)

APPROVED FOR RELEASE: 08/09/2001 CIA-RDP86-00513R001858620014-6"

"APPROVED FOR RELEASE: 08/09/2001 CIA-RDP86-00513R001858620014-6

VARLAMOV, R., inzh.

Homemade magnetic antenna. IUn.tekh. 5 no.3:74-75 Mr '61. (MIRA 14:6)

(Radio--Antennas)

APPROVED FOR RELEASE: 08/09/2001 CIA-RDP86-00513R001858620014-6"

"APPROVED FOR RELEASE: 08/09/2001 CIA-RDP86-00513R001858620014-6

VARLAMOV, R.

Home-made photocells. IUn.tekh. 5 no.4:46-47 Ap '61. (MIRA 14:3)
(Photoelectric cells)

APPROVED FOR RELEASE: 08/09/2001 CIA-RDP86-00513R001858620014-6"

"APPROVED FOR RELEASE: 08/09/2001 CIA-RDP86-00513R001858620014-6

VARLAMOV, R., inzh.

"Bionics." IUn.tekh. 5 no.7:17-21 Jl '61. (MIRA 15:1)
(Biology)
(Cybernetics)

APPROVED FOR RELEASE: 08/09/2001 CIA-RDP86-00513R001858620014-6"

"APPROVED FOR RELEASE: 08/09/2001 CIA-RDP86-00513R001858620014-6

VARLAMOV, R., inzh.

Portable table lathe. IUn.tekh. 7 no.11:73 N '62. (MIRA 15:12)
(Lathes)

APPROVED FOR RELEASE: 08/09/2001 CIA-RDP86-00513R001858620014-6"

"APPROVED FOR RELEASE: 08/09/2001 CIA-RDP86-00513R001858620014-6

VARLAMOV, R.

Correspondence school of radio electronics; simple receiver on "points." Iun.tekh. 7 no.4:60-62 Ap '63. (MIRA 16:4)
(Radio--Receivers and reception)

APPROVED FOR RELEASE: 08/09/2001 CIA-RDP86-00513R001858620014-6"

"APPROVED FOR RELEASE: 08/09/2001 CIA-RDP86-00513R001858620014-6

YARLAMOV, R.G.; BORISOVA, V.G., red.; NOVOSEL'TSEVA, O.N., otv. red.; SOKOLOVA, Ye.V., tekhn. red.

[Simple transistorized receivers] Prosteishie priemniki na poluprovodnikakh. Moskva, Izd-vo "Detskii mir," 1961. 1 fold. l. (Prilozhenie k zhurnalu "IUnyi tekhnik," no.10(100)) (MIRA 14:5)

1. TSentral'naya stantsiya yunikh tekhnikov, Moscow.
(Transistor radios)

APPROVED FOR RELEASE: 08/09/2001 CIA-RDP86-00513R001858620014-6"

"APPROVED FOR RELEASE: 08/09/2001 CIA-RDP86-00513R001858620014-6

VARLAMOV, R.G.; STAKHURSKIY, A.Ye., red.; NOVOSEL'TSEVA, O.N., otv. red.

[Eyeglasses and hearing aid combination] Priemnik - ochki. Moskva, Izd-vo "Detskii mir," 1962. 1 fold. l. (Prilozhenie k zhurnalu "IUnyi tekhnik," no.1(115)) (MIRA 15:2)

1. TSentral'naya stantsiya yunykh tekhnikov, Moscow.
(EYEGLASSES) (HEARING AIDS)

APPROVED FOR RELEASE: 08/09/2001 CIA-RDP86-00513R001858620014-6"

"APPROVED FOR RELEASE: 08/09/2001 CIA-RDP86-00513R001858620014-6

VARLAMOV, R.G.; NOVOSEL'TSEVA, O.N., otv. red.; STAKHURSKIY, A.Ye., red.; SOKOLOVA, Ye.V., tekhn. red.

[A simple transistor tester] Prostoi tester dlia proverki tranzistorov. Moskva, Izd-vo "Detskii mir," 1962. 1 fold.l. (Prilozhenie k zhurnalu "IUnyi tekhnik," no.4(118)) (MIRA 15:2)

1. TSentral'naya stantsiya yunykh tekhnikov, Moscow. (Transistors--Testing)

APPROVED FOR RELEASE: 08/09/2001 CIA-RDP86-00513R001858620014-6"

"APPROVED FOR RELEASE: 08/09/2001 CIA-RDP86-00513R001858620014-6

GUSEV, V.P.; FOMIN, A.V.; KUNYAVSKIY, G.M.; OBICHKIN, Yu.G.; MOLOSTOV, Ye.A.; NAZAROV, A.S.; SAKHAROV, M.A.; GREBNEV, A.K.; VARLAMOV, R.G., retsenzent; DEMBITSKIY, L.N., retsenzent; RAKOV, N.A., retsenzent; LYUBIMOVA, T.M., red.; BELYAYEVA, V.V., tekhn. red.

[Calculation of electrical tolerances in radio-electronic apparatus] Raschet elektricheskikh dopuskov radioelektronnoi apparatury. [By] V.P.Gusev i dr. Moskva, "Sovetskee radio," 1963. 366 p. (MIRA 17:1)

APPROVED FOR RELEASE: 08/09/2001 CIA-RDP86-00513R001858620014-6"

"APPROVED FOR RELEASE: 08/09/2001 CIA-RDP86-00513R001858620014-6

ACC NR: AM6021849 Monograph UR/

Varlamov, Rem Gennad'yevich

Packaging of radio and electronic equipment (Komponovka radio i elektronnoy apparatury) Moscow, Izd-vo "Sovetskoye radio," 1966. 333 p. illus., biblio., tables., plates (partly colored) 13,500 copies printed.

TOPIC TAGS: packaging machinery, electronic equipment, radio equipment, naval equipment, microelectronic packaging, PACKAGING TECHNIQUE

PURPOSE AND COVERAGE: This book is intended for a wide circle of specialists concerned with packaging of radio and electronic equipment. It will also be useful to technical personnel, students at schools of higher education, and qualified radio hams. Packaging problems and the factors which determine them are discussed. In addition to questions of a general nature, various packaging methods and the fields where their use is expedient are described. The packaging of functional blocks, circuits of various types of radio and electronic equipment, and packaging from an artistic viewpoint are treated in separate chapters. Recommendations are made concerning quality control of packaging operations.

TABLE OF CONTENTS:

Foreword -- 7

Card 1/5 UDC: 621.396.001.2:002.72

APPROVED FOR RELEASE: 08/09/2001 CIA-RDP86-00513R001858620014-6"

"APPROVED FOR RELEASE: 08/09/2001 CIA-RDP86-00513R001858620014-6

ACC NR: AM6021849

Ch. I. General Problems of Packaging
1. Packaging radio and electronic equipment, basic terminology and definitions -- 11
2. Special features of packaging operations at various stages -- 17
3. Series of factors determining packaging -- 21
4. The limiting values of some package characteristics -- 29
Bibliography -- 38

Ch. II. Basic Factors Determining Packaging
1. Useful and spurious parameters of radio and electronic elements and goods -- 39
2. Human operator as a "machine" for data processing -- 45
3. Object -- 61
Bibliography -- 68

Ch. III. Methods of Executing Packaging Operations
1. Analytical packaging -- 69
2. Nomographic packaging -- 74
3. Application packaging -- 78
4. Model packaging -- 81
5. Graphic packaging -- 85
6. Full-scale packaging -- 90
Bibliography -- 92

Card 2/5

APPROVED FOR RELEASE: 08/09/2001 CIA-RDP86-00513R001858620014-6"

"APPROVED FOR RELEASE: 08/09/2001 CIA-RDP86-00513R001858620014-6

ACC NR: AM6021849

Ch. IV. Packaging Circuits of Functional Blocks
1. General remarks -- 93
2. Wired functional blocks -- 106
3. Printed-circuit functional blocks -- 119
4. Micromodule functional blocks -- 133
5. Plane and volumetric functional microblocks -- 151
6. Functional blocks with film elements -- 158
7. Calculation of spurious couplings in the packaging functional blocks -- 175
Bibliography -- 189

Ch. V. Packaging Unit Circuits, Apparatus and Systems
1. General remarks -- 191
2. Packaging circuits of portable equipment -- 195
3. Packaging circuits of transportable equipment -- 197
4. Packaging circuits of stationary equipment -- 201
5. Packaging circuits of naval equipment -- 208
6. Packaging circuits of aviation equipment -- 213
7. Packaging circuits of missile radio and electronic equipment -- 217
8. Packaging radio and electronic equipment on space objects -- 222
9. Evaluation of radio and electronic equipment protection against vibration -- 227

Card 3/5

APPROVED FOR RELEASE: 08/09/2001 CIA-RDP86-00513R001858620014-6"

"APPROVED FOR RELEASE: 08/09/2001 CIA-RDP86-00513R001858620014-6

ACC NR: AM6021849

10. Evaluation of thermal conditions of radio and electronic equipment -- 234
Bibliography -- 245

Ch. VI. External Packaging of a Ware Taking Into Account Technical Aesthetic Requirements
1. Special features of the artistic design of radio and electronic equipment -- 247
2. Sight and visual indicators -- 251
3. Hearing, touch, acoustical, and tactile indicators -- 263
4. Brief characteristic of effectors and the packaging of controls -- 268
5. Problems of shape -- 278
6. Color and functional coloration -- 287
7. Brief historical review of the external aspect of radio and electronic equipment -- 296
8. Influence of environment -- 300
Bibliography -- 306

Ch. VII. Qualitative Evaluation of the Packaging of Goods
1. General principles of evaluation -- 308
2. Purely geometric relationships -- 310
3. Functional geometric relationships -- 311

Card 4/5

APPROVED FOR RELEASE: 08/09/2001 CIA-RDP86-00513R001858620014-6"

"APPROVED FOR RELEASE: 08/09/2001 CIA-RDP86-00513R001858620014-6

ACC NR: AM6021849

4. Functional energy relationships -- 315
5. Aesthetic criteria in evaluating packaging quality -- 316

Bibliography -- 318

Appendixes -- 320

SUB CODE: 09/ SUBM DATE: 06Dec65/ ORIG REF: 081/ OTH REF: 034

Card 5/5

APPROVED FOR RELEASE: 08/09/2001 CIA-RDP86-00513R001858620014-6"

"APPROVED FOR RELEASE: 08/09/2001 CIA-RDP86-00513R001858620014-6

VARLAMOV, R.; inzh.; SPERANSKIY, V.

Transistorized audio tracking device. Radio no.11:25-27 N '63. (MIRA 16:12)

APPROVED FOR RELEASE: 08/09/2001 CIA-RDP86-00513R001858620014-6"

"APPROVED FOR RELEASE: 08/09/2001 CIA-RDP86-00513R001858620014-6

VARLAMOV, S. (Kalinin)

Increasing volume in playing phonograph records with a "Moskvich" receiver. Radio no.12:63 D '54. (MIRA 8:1)
(Phonograph) (Radio--Receivers and reception)

APPROVED FOR RELEASE: 08/09/2001 CIA-RDP86-00513R001858620014-6"

"APPROVED FOR RELEASE: 08/09/2001 CIA-RDP86-00513R001858620014-6

TARASOV, Yu.D., inzh.; VARLAMOV, S.I., inzh.

Technical design and operation of a large crushing and grading plant. Stroi.mat. 9 no.3:1-5 Mr '63. (MIRA 16:4)
(Crushed stone industry—Equipment and supplies)

APPROVED FOR RELEASE: 08/09/2001 CIA-RDP86-00513R001858620014-6"

"APPROVED FOR RELEASE: 08/09/2001 CIA-RDP86-00513R001858620014-6

SHELEPIN, M.N.; PAUK, M.Ya.; FUNTIKOV, V.Z.; VARLAMOV, S.S.; SLIN'KO, A.G.; TOMLENOV, V.K.; ZAGNIYEV, V.M.

Saving of power in a compressor station. Prom.energ. 17 no.7:6 Jl '62. (MIRA 15:7)

(Compressed air) (Compressors)

APPROVED FOR RELEASE: 08/09/2001 CIA-RDP86-00513R001858620014-6"

"APPROVED FOR RELEASE: 08/09/2001 CIA-RDP86-00513R001858620014-6

VARLAMOV, P.I.

VARLAMOV, P.I.

The teaching farm of a school and its planning. Politekh. obuch. no.1:10-19 Ja '58. (MIRA 10:12)

1. Ryazanskiy oblastnoy institut usovershenstvovaniya uchiteley.
(Ryazan Province--Agriculture--Study and teaching)

APPROVED FOR RELEASE: 08/09/2001 CIA-RDP86-00513R001858620014-6"

"APPROVED FOR RELEASE: 08/09/2001 CIA-RDP86-00513R001858620014-6

VARLAMOV, T.I.

Planning school work on a stockbreeding training farm. Politekh. obuch. no.12:31-36 D '58. (MIRA 11:12)

1. Ryazanskiy oblastnoy institut usovershenstvovaniya uchiteley.
(Riazan Province--Stock and stock breeding--Study and teaching)

APPROVED FOR RELEASE: 08/09/2001 CIA-RDP86-00513R001858620014-6"

"APPROVED FOR RELEASE: 08/09/2001 CIA-RDP86-00513R001858620014-6

VARLAMOV, V.; KHOREV, B.; SHATSILO, Ye.

Geographical conference devoted to satellite towns. Izv. AN SSSR.Ser.geog. no.3:162-164 My-Je '60. (MIRA 13:6)

(City planning--Congresses)

APPROVED FOR RELEASE: 08/09/2001 CIA-RDP86-00513R001858620014-6"

"APPROVED FOR RELEASE: 08/09/2001 CIA-RDP86-00513R001858620014-6

VARLAMOV, V.A.

Our experience in preparing and using an acidophilus broth culture. Veterinariia 35 no.12:53 D '58. (MIRA 11:12)

1. Zaveduyushchiy Chaplinskoy mezhrayonnoy vetbaklaboratoriyey, Dnepropetrovskaya oblast'.
(Lactobacillus acidophilus) (Calves--Diseases and pests)

APPROVED FOR RELEASE: 08/09/2001 CIA-RDP86-00513R001858620014-6"

"APPROVED FOR RELEASE: 08/09/2001 CIA-RDP86-00513R001858620014-6

VARLAMOV, V.A.

Therapeutic properties of feed yeasts. Veterinariia 41 no.3:63-64 Mr '64. (MIRA 18:1)

1. Zaveduyushchiy Nikopol'skoy veterinarnoy laboratoriyey. Dnepropetrovskaya oblast'.

APPROVED FOR RELEASE: 08/09/2001 CIA-RDP86-00513R001858620014-6"

"APPROVED FOR RELEASE: 08/09/2001 CIA-RDP86-00513R001858620014-6

L 07790-67 EWT(1) SCTB DD

ACC NR: AP6034202 SOURCE CODE: UR/0240/66/000/010/0059/0062

AUTHOR: Varlamov, V. A.; Maksimov, G. V.

ORG: Institute of Industrial Hygiene and Occupational Diseases, AMN SSSR, Moscow (Institut gigiyeny truda i profzabolevaniy AMN SSSR)

25
B

TITLE: Method for recording pulse and respiration rate visually

SOURCE: Gigiyena i sanitariya, no. 10, 1966, 59-62

TOPIC TAGS: heart rate, cardiovascular system, respiratory system, respiratory rate, human physiology, biometrics, biotelemetry

ABSTRACT: A device for recording pulse rate visually is shown in Fig. 1. It consists of initial and terminal biocurrent amplifiers, power unit, and indicator lamps. The first two components are contained in a case attached to the subject's trunk, while the third is located on the subject's helmet. Cardiac biocurrents from electrodes attached to the chest enter a three-stage preamplifier with a gain of 1500. The voltage-amplified biocurrents drive a power amplifier stage grounded through relay RES-10 which in turn is connected to the indicator lamps. These lamps flash at the same frequency as the pulse rate. Low-frequency (P-15) triodes with a current gain of 40—50 are used in the biocurrent preamplifier. To increase the thermal stability of the amplifier in each stage, automatic bias (R_2, R_4, and R_6) has been introduced. High input impedance is ensured by emitter resistor R_1. Small coupling

Card 1/4 UDC: 612.16+612.216]-087:613.6

APPROVED FOR RELEASE: 08/09/2001 CIA-RDP86-00513R001858620014-6"

"APPROVED FOR RELEASE: 08/09/2001 CIA-RDP86-00513R001858620014-6

ACC NR: AP6034202

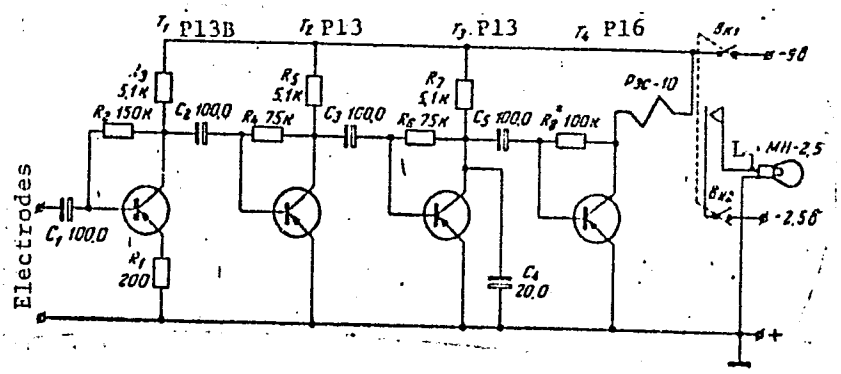

Fig. 1. Schematic of a device for the visual recording of pulse rate

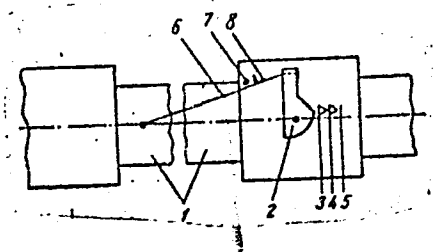

Fig. 2. Basic diagram of a device for visually recording respiratory rate (respiratory sensor)

1 - Rubber stamp; 2 - eccentric component; 3, 4, 5 - contacts; 6 - tension cord; 7 - brace; 8 - arresting mechanism.

Card 2/4

APPROVED FOR RELEASE: 08/09/2001 CIA-RDP86-00513R001858620014-6"

"APPROVED FOR RELEASE: 08/09/2001 CIA-RDP86-00513R001858620014-6

L 07790-67
ACC NR: AP6034202

capacitors manufactured in the "Tesla" factory are used in the amplifier. To prevent parasitic oscillation due to power feedback, decoupling capacitor C_4 is included in the collector of T_3. When using a power source with low internal resistance, capacitor C_4 is unnecessary. The power amplifier T_4 uses a P-16 transistor grounded via the coil of relay P_1. The current gain of T_4 is 50—60. If a high-gain transistor is used, the sensitivity of the device is increased but its thermal stability is decreased. Of all the circuit components, only the feedback elements require regulation (within 30—200 kohm). The amplifiers are arranged on 35 x 80-mm textolite cloth sections 0.5 mm thick and are situated in a metal housing. The device is powered by two batteries, one of which feeds the initial and terminal amplifiers and the other of which feeds the indicator lamps. A device for visual recording of respiration rate is shown in Fig. 2. It consists of a respiratory sensor which converts variations in thoracic excursion during respiration into electrical signals. The two-way, relay-type sensor (Fig. 2) consists of cuffs with rubber straps, three contacts with an eccentric component, and a tension cord. The eccentric component is made out of plastic and is 3 mm thick. The tension cord is made out of a steel wire with a 0.2—0.5-mm diameter. To prevent breakage of the sensor, a piece of steel wire is used as an arresting mechanism. During inspiration, expansion of the thorax increases the tension of the rubber strap, causing a transfer of force which rotates the eccentric component. Depending on the angle of rotation, one or two contacts are closed. There are three flexible leads from the relay contacts: The first one is attached to the power source, while the second and third are attached to the two lamps, which in turn are attached to the subject's helmet or

APPROVED FOR RELEASE: 08/09/2001 CIA-RDP86-00513R001858620014-6"

"APPROVED FOR RELEASE: 08/09/2001 CIA-RDP86-00513R001858620014-6

ACC NR: AP6034202

clothing. The second pole of power to the lamps leads directly from the battery. The lamps and power source are the same as those used for the pulse-rate recorder. Both these devices are portable and they were designed primarily for industrial hygiene operations. Orig. art. has: 2 figures.

SUB CODE: 06/ SUBM DATE: 04Feb65/ ORIG REF: 010/ OTH REF: 002/
ATD PRESS: 5101

Card 4/4 gd

APPROVED FOR RELEASE: 08/09/2001 CIA-RDP86-00513R001858620014-6"

"APPROVED FOR RELEASE: 08/09/2001 CIA-RDP86-00513R001858620014-6

L 05272-67

ACC NR: AT6036467 SOURCE CODE: UR/0000/66/000/000/0012/0013

AUTHOR: Agro, A. L.; Nilovskaya, N. T.; Taitovich, S. I. Bokovaya, M. M. Varlamov, V. F.; Chernovich, I. L.

ORG: none

TITLE: Experimental investigation of the possibility of cultivating higher plants on a nutrient medium of biological mineralizers under conditions of a closed gas cycle [Paper presented at conference on problems of space medicine held in Moscow from 24-27 May 1966]

SOURCE: Konferentsiya po problemam kosmicheskoy meditsiny, 1966. Problemy kosmicheskoy meditsiny. (Problems of space medicine); materialy konferentsii, Moscow, 1966, 12-13

TOPIC TAGS: life support system, closed ecological system, plant physiology, photosynthesis, plant metabolism

ABSTRACT:

The creation of a closed cycle of substances for experimental ecological systems is unthinkable without a stage of recycling human metabolic wastes, in order to transform organic substances into elements for mineral feeding of lower and higher autotrophs.

Card 1/3

APPROVED FOR RELEASE: 08/09/2001 CIA-RDP86-00513R001858620014-6"

"APPROVED FOR RELEASE: 08/09/2001 CIA-RDP86-00513R001858620014-6

L 08272-67

ACC NR: AT6036467

One of the possible and promising methods of mineralizing human metabolic wastes is to use aerobic oxidation of organic materials with the aid of biocenosis of microorganisms, carried out in a biological mineralization chamber. At the present time, the aeration tank (aerotank) as a biological mineralization chamber is highly developed from the point of view of both engineering and construction and is quite useful for conducting experiments with short closed cycles.

In these experiments (the very first), two linked but contradictory processes were utilized. The first process was the synthesis of organic compounds from inorganic ones using the energy of light (photosynthesis of higher plants). The second process was the biochemical oxidation of organic substances (mineralization of the urine and fecal mixture in the aeration chamber).

Higher plants (head cabbage) were grown for a period of twelve days in an open assimilation chamber on a urine-fecal liquid which had been mineralized biologically. After this, they were grown under conditions of a closed exchange of a gas-air mixture between the assimilation chamber and the aeration tank for periods of four and eleven days.

APPROVED FOR RELEASE: 08/09/2001 CIA-RDP86-00513R001858620014-6"

"APPROVED FOR RELEASE: 08/09/2001 CIA-RDP86-00513R001858620014-6

ACC NR: AT6036467

During the process of biological mineralization, a certain amount of CO_2 gas was extracted from the aeration tank and allowed to pass into the assimilation chamber with the higher plants. In turn, oxygen which had been produced by the plants passed into the aeration tank. These experiments with the "assimilation chamber-aeration tank" system made it possible to establish a practical gas exchange between higher plants and the biocenosis of mineralizing microorganisms. The experiments also established the possibility of using a mineralized urine-fecal liquid as a nutrient medium for higher plants. In the course of these experiments a somewhat lowered photosynthetic rate was observed. It is assumed that this can be explained by the action of some kind of gaseous micro-admixtures which are metabolites of plants and of activated sludge.

Experimentation with short closed cycles of the "assimilation chamber-aeration tank" type showed that they are practical for obtaining information necessary for the creation of closed ecological system.

[W.A. No. 22; ATD Report 66-1167]

SUB CODE: 06 / SUBM DATE: 00May66

Card 3/3 egb

APPROVED FOR RELEASE: 08/09/2001 CIA-RDP86-00513R001858620014-6"

"APPROVED FOR RELEASE: 08/09/2001 CIA-RDP86-00513R001858620014-6

ACCESSION NR: AP3002719 S/0120/63/000/003/0055/0057

AUTHOR: Bobrov, V. D.; Varlamov, V. G.; Grashin, Yu. M.; Dolgoshein, B. A.; Kirillov-Ugryumov, V. G.; Roganov, V. S.; Samoylov, A. V.

TITLE: Use of threshold Cerenkov counter for separation of μ- and π-mesons in meson beams

SOURCE: Pribory i tekhnika eksperimenta, no. 3, 1963, 55-57

TOPIC TAGS: μ-meson separation, threshold Cerenkov counter

ABSTRACT: A Cerenkov counter has been used for the separation of μ- and π-mesons. The counter consists of a 100-mm cube of polished organic glass 2 mm thick filled with distilled water containing 2-aminonaphthalene-6, 8-disulfonic acid, which serves as the spectrum transformer. This cube is placed inside another cube with walls 4 mm thick. The space of 3 mm between the cubes is filled with MgO powder. Two FEY-33 photomultipliers connected to a common load are in optical contact with the water radiator. The radiator

Card 1/3

APPROVED FOR RELEASE: 08/09/2001 CIA-RDP86-00513R001858620014-6"

"APPROVED FOR RELEASE: 08/09/2001 CIA-RDP86-00513R001858620014-6

ACCESSION NR: AP3002719

and the photomultiplier are enclosed in a steel casing with foil windows for particle passage. A block diagram of the arrangement is shown in Fig. . of the Enclosure. A 260-Mev/sec pulsed meson beam was used in experiment. Resolution time of the coincidence circuits is 5—6 nanosec, and the efficiency of anticoincidence, 99.93%. It was found that the use of the Cerenkov counter makes it possible to reduce the contents of π-mesons in a μ-meson beam by a factor of 10. Orig. art. has: 3 figures.

ASSOCIATION: none

SUBMITTED: 25Jun62 DATE ACQ: 12Jul63 ENCL: 01

SUB CODE: 00 NO REF SOV: 001 OTHER: 001

Card 2/3

APPROVED FOR RELEASE: 08/09/2001 CIA-RDP86-00513R001858620014-6"

"APPROVED FOR RELEASE: 08/09/2001 CIA-RDP86-00513R001858620014-6

ACCESSION NR: AP3002719

ENCLOSURE: 01

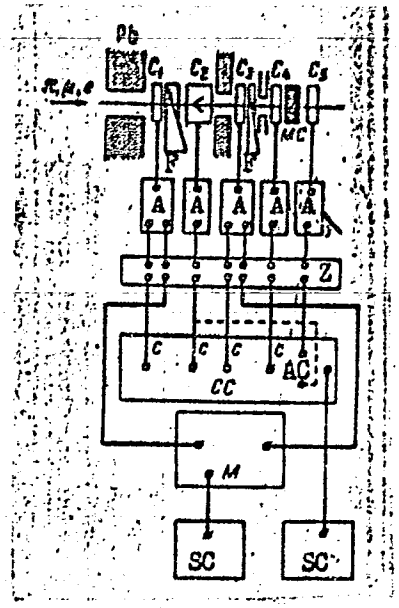

Fig. 1. Location of counters and block diagram of electronic circuit

Pb - 70 x 70 mm lead collimator; C_1 and C_3 - scintillation counters with Φ 100 x 10 mm plastic scintillators; C_4 - Φ 80 x 3 mm; C_5 - Φ 200 x 10 mm; C_2 - Cerenkov counter; F_1 and F_2 - variable thickness filters; Mc - 3 gr/cm² carbon target; A_1 through A_5 - amplifiers with gain of 5; З - variable delay lines; CC - coincidence and anticoincidence circuits; C - coincidence inputs; AC - anticoincidence inputs; M - coincidence monitoring circuit; SC - scaler circuit.

Card 3/3

APPROVED FOR RELEASE: 08/09/2001 CIA-RDP86-00513R001858620014-6"

"APPROVED FOR RELEASE: 08/09/2001 CIA-RDP86-00513R001858620014-6

BOBROV, V.D.; VARLAMOV, V.G.; GRASHIN, Yu.M.; DOLGOSHEIN, B.A.; KIRILLOV-UGRYUMOV, V.G.; ROGANOV, V.S.; SAMOYLOV, A.V.

Use of a threshold Cherenkov counter in separating π - and μ - mesons in meson beams. Prib. i tekh. eksp. 8 no.3:55-57 My-Je '63. (MIRA 16:9)

APPROVED FOR RELEASE: 08/09/2001 CIA-RDP86-00513R001858620014-6"

"APPROVED FOR RELEASE: 08/09/2001 CIA-RDP86-00513R001858620014-6

L 14984-63 EWT(d)/BDS ASD/ESD-3/APGC Pg-4/Pk-4/Po-4/Pq-4
IJP(C)
ACCESSION NR: AP3004891 S/0120/63/000/004/0063/0066 74 75

AUTHOR: Varlamov, V. G.; Grashin, Yu. M.; Dolgoshein, B. A.; Samoylov, A. V. 16

TITLE: Multichannel coincidence-anticoincidence circuit

SOURCE: Pribory* i tekhnika eksperimenta, no. 4, 1963, 63-66

TOPIC TAGS: multichannel coincidence-anticoincidence circuit, coincidence-anticoincidence circuit, scintillation counter, particle recording efficiency, coincidence-circuit dead time, coincidence-pulse rise time

ABSTRACT: The coincidence-anticoincidence circuit shown in Fig. 1 of Enclosure has four coincidence and two anticoincidence channels. The coincidence circuits are switched on by corresponding tumblers. The input pulses are negative with an amplitude of 2 v or higher. The plate current of each coincidence tube (L_1 to L_4) is 20 μamp. The current flowing along the separating diode D_3 is 15 μamp. The voltage of D_5 is 0.5 v with one open tube and 0.7 v with four open tubes; consequently, with incomplete coincidence the maximum pulse amplitude for D_3 is 0.2 v. The coincidence pulses separated at D_3 are amplified by the wide-band stage of tube L_5. Diode D_5 discriminates the incomplete coincidences, which then have an amplitude of 1 v or higher. Discrimination reduces the current of L_6 by

Card 1/3 2

APPROVED FOR RELEASE: 08/09/2001 CIA-RDP86-00513R001858620014-6"

"APPROVED FOR RELEASE: 08/09/2001 CIA-RDP86-00513R001858620014-6

L 14984-63
ACCESSION NR: AP3004891

approximately 70 to 80%. Four scintillation counters whose scintillators were 100 mm in diameter and 10 mm thick were used to test the circuit. FEU-3 photomultipliers were in optical contact with the counters, the signals of each of which were shaped and amplified by a wide-band two-stage amplifier. Experimental results show that the following: 1) at a time resolution of 5 to 8 nanosec, the efficiency of particle recording in four-cycle coincidences is not lower than 99%; 2) the efficiency of particle anticoincidence recording is 99.95 ±0.01%; 3) coincidence circuit dead time is about 30 nanosec; and 4) output-pulse rise time of the coincidence circuit is less than 10 nanosec. Orig. art. has: 5 figures.

ASSOCIATION: Fizicheskiy institut AN SSSR (Physics Institute, AN SSSR)

SUBMITTED: 00 DATE ACQ: 28Aug63 ENCL: 01

SUB CODE: GE, SD NO REF SOV: 000 OTHER: 001

Card 2/2

APPROVED FOR RELEASE: 08/09/2001 CIA-RDP86-00513R001858620014-6"

"APPROVED FOR RELEASE: 08/09/2001 CIA-RDP86-00513R001858620014-6

ACCESSION NR: AP4044686

AUTHOR: Varlamov, V. G.; Grashin

APPROVED FOR RELEASE: 08/09/2001 CIA-RDP86-00513R001858620014-6"

"APPROVED FOR RELEASE: 08/09/2001 CIA-RDP86-00513R001858620014-6

APPROVED FOR RELEASE: 08/09/2001 CIA-RDP86-00513R001858620014-6"

"APPROVED FOR RELEASE: 08/09/2001 CIA-RDP86-00513R001858620014-6

APPROVED FOR RELEASE: 08/09/2001 CIA-RDP86-00513R001858620014-6"

"APPROVED FOR RELEASE: 08/09/2001 CIA-RDP86-00513R001858620014-6

APPROVED FOR RELEASE: 08/09/2001 CIA-RDP86-00513R001858620014-6"

"APPROVED FOR RELEASE: 08/09/2001 CIA-RDP86-00513R001858620014-6

VARLAMOV, V. G.

95

S/089/62/013/006/019/027
B102/B186

AUTHORS: G. T. and M. R.

TITLE: Nauchnaya konferentsiya Moskovskogo inzhenerno-fizicheskogo instituta (Scientific Conference of the Moscow Engineering Physics Institute) 1962

PERIODICAL: Atomnaya energiya, v. 13, no. 6, 1962, 603 - 606

TEXT: The annual conference took place in May 1962 with more than 400 delegates participating. A review is given of these lectures that are assumed to be of interest for the readers of Atomnaya energiya. They are following: A. I. Leypunskiy, future of fast reactors; A. A. Vasil'yev, design of accelerators for superhigh energies; I. Ya. Pomeranchuk, analyticity, unitarity, and asymptotic behavior of strong interactions at high energies; A. B. Migdal, phenomenological theory for the many-body problem; Yu. D. Fiveyskiy, deceleration of medium-energy antiprotons in matter; Yu. M. Kogan, Ya. A. Iosilevskiy, theory of the Mössbauer effect; M. I. Ryazanov, theory of ionization losses in nonhomogeneous medium; Yu. B. Ivanov, A. A. Rukhadze, h-f conductivity of subcritical plasma;

Card 1/4

APPROVED FOR RELEASE: 08/09/2001 CIA-RDP86-00513R001858620014-6"

"APPROVED FOR RELEASE: 08/09/2001 CIA-RDP86-00513R001858620014-6

36

S/089/62/013/006/019/027
B102/B186

Nauchnaya konferentsiya...

Ye. Ye. Lovetskiy, A. A. Rukhadze, electromagnetic waves in nonhomogeneous plasma; Yu. D. Kotov, I. L. Rozental', the origin of fast cosmic muons; Yu. M. Ivanov, muon depolarization in solids; V. G. Varlamov, Yu. M. Grashin, B. A. Dolgoshein, V. G. Kirillov-Ugryumov, V. S. Rugamov, A. V. Samoylov, μ^- capture by various nuclei; V. S. Demidov, V. G. Kirillov-Ugryumov, A. K. Ponosov, V. P. Protasov, F. M. Sergeyev, scattering of π^- mesons at 5 - 15 Mev in a propane bubble chamber; S. Ya. Nikitin, M. S. Aynutdinov, Ya. M. Selektor, S. M. Zombkovskiy, A. F. Grashin, muon production in π^-p interactions; B. A. Dolgoshein, spark chambers; N. G. Volkov, V. K. Lyapidevskiy, I. M. Obodovskiy, study of operation of a convection chamber; K. G. Finogenov, production of square voltage pulses of high amplitudes; G. N. Alekseakov, problems of color vision; V. K. Lyapidevskiy, relation between number of receivers and number of independent colors; Ye. M. Kudryavtsev, N. N. Sobolev, N. I. Tizengausen, L. N. Tunitskiy, F. S. Fayzulov, determination of the moment of electron transition of oscillator forces and the widths of the Schuhman-Runge bands of molecular oxygen; B. Ye. Gavrilov, A. V. Zharikov, V. I. Rayko, decomposition of the volume charge of intense ion beams; Ye. A. Kramer-Ageyev, V. S. Troshin, measurement of neutron spectra; G. G. Doroshenko, new methods of fast-neutron recording; V. I. Ivanov, dosimetry terminology; R. M. Voronkov,

Card 2/4

APPROVED FOR RELEASE: 08/09/2001 CIA-RDP86-00513R001858620014-6"

"APPROVED FOR RELEASE: 08/09/2001 CIA-RDP86-00513R001858620014-6

KOMAROV, V.S.; YERMOLENKO, N.F.; VARLAMOV, V.I.

Swelling of White Russian clays. Dokl.AN BSSR 4 no.3:108-112 Mr '60. (MIRA 13:6)

(White Russia--Clay)

APPROVED FOR RELEASE: 08/09/2001 CIA-RDP86-00513R001858620014-6"

"APPROVED FOR RELEASE: 08/09/2001 CIA-RDP86-00513R001858620014-6

S/081/61/000/021/019/094
B102/B138

AUTHORS: Komarov, V. S., Yermolenko, N. F., Varlamov, V. I.

TITLE: Structure and adsorption activity of organic clays

PERIODICAL: Referativnyy zhurnal. Khimiya, no. 21, 1961, 68, abstract 21B553 (Dokl. AN BSSR, v. 5, no. 3, 1961, 105-108)

TEXT: Investigation is made, of the sorptive, structural, and other characteristics of a series of aminated organic clays (AOC), prepared on the basis of Georgian askanite gel and Belorussian clays. The CCl_4 sorption capacity and the specific surface of AOC's were greater than those of natural clays. Substitution of inorganic by organic cations will, obviously, be accompanied by the loosening of the crystalline structure of the clay and by an increase in the sorption potential. There is no essential difference between the shape of the CCl_4 sorption isotherms of AOC and those of natural clays. All the sorbents examined belong to the fourth structural type of Kiselev's classification. Water sorption is 50-75% that of benzene, due, apparently to the hydrophobic action of the carbon chain of amine. The degree of swelling of AOC in

Card 1/2

APPROVED FOR RELEASE: 08/09/2001 CIA-RDP86-00513R001858620014-6"

"APPROVED FOR RELEASE: 08/09/2001 CIA-RDP86-00513R001858620014-6

S/081/61/000/021/019/094
B102/B138

Structure and adsorption ...

water, benzene, acetone, and nitrobenzene is much lower than that of natural clays. [Abstracter's note: Complete translation.]

Card 2/2

APPROVED FOR RELEASE: 08/09/2001 CIA-RDP86-00513R001858620014-6"

"APPROVED FOR RELEASE: 08/09/2001 CIA-RDP86-00513R001858620014-6

KOMAROV, V.S.; YERMOLENKO, N.F., akademik; VARLAMOV, V.I.

Production of a highly active mechanically strong clay hydroxide adsorbent by means of acid activation of clays. Dokl. AN SSSR 139 no.3:665-668 Jl '61. (MIRA 14:7)

1. Institut obshchey i neorganicheskoy khimii AN BSSR. 2. AN BSSR (for Yermolenko).

(Clay) (Adsorbents)

APPROVED FOR RELEASE: 08/09/2001 CIA-RDP86-00513R001858620014-6"

"APPROVED FOR RELEASE: 08/09/2001 CIA-RDP86-00513R001858620014-6

38112
S/020/62/144/002/025/028
B101/B110

11.0120

AUTHORS: Komarov, V. S., Yermolenko, N. F., Academician AS BSSR, and Varlamov, V. I.

TITLE: Thermocatalytic desulfurization of hydrocarbon fuels on a calcined clay-hydroxide catalyst

PERIODICAL: Akademiya nauk SSSR. Doklady, v. 144, no.2, 1962, 406 - 408

TEXT: In view of the planned raise of petroleum production in the Ural-Volga area an inexpensive industrial desulfurization process was developed. Experiments were made with an iron-containing clay-hydroxide catalyst which had been described already earlier (DAN, 139, no. 3, 665 (1961)). Desulfurization was carried out in a heated glass tube, the air being displaced by N_2. The catalyst was regenerated by blowing air through the tube at 550 - 600°C. Results: (1) 95.7 and 80.3 % S could be removed from gasoline (b.p. 40 - 200°C) containing 0.070 % S at fuel-to-catalyst ratios of 2:1 and 20:1, respectively. At ratios of 2:1 and 10:1, 92.4 and 85 - 87 % S, respectively, could be removed from ligroin (b.p. 120 - 240°C) containing 0.146 % S. (2) The catalyst could be regenerated repeatedly. After 20

Card 1/2

APPROVED FOR RELEASE: 08/09/2001 CIA-RDP86-00513R001858620014-6"