"APPROVED FOR RELEASE: 03/20/2001 CIA-RDP86-00513R001860910010-5

VORONIN, E.S.

Synchronization of self-oscillators by an outside force. Radiotekhnika 14 no.2:48-56 F '59. (MIRA 12:1)
(Oscillators, Electron-tube)

APPROVED FOR RELEASE: 03/20/2001 CIA-RDP86-00513R001860910010-5"

"APPROVED FOR RELEASE: 03/20/2001 CIA-RDP86-00513R001860910010-5

ACC NR: AP6007498 SOURCE CODE: UR/0109/66/011/002/0211/0218

AUTHOR: Voronin, E. S.; Yanayt, Yu. A.

ORG: none

TITLE: Phase switching in a three-state parametric trigger

SOURCE: Radiotekhnika i elektronika, v. 11, no. 2, 1966, 211-218

TOPIC TAGS: flip flop circuit, parametric oscillator

ABSTRACT: A two-tank parametric oscillator is investigated. It can be excited on one of three stable types of oscillations having the same frequency but phase-shifted by $2\pi/3$ from one another. Such an oscillator can be used in computers as a 3-position trigger. Formulas describing the operation and phase-switching of the oscillator by a harmonic external signal are derived. It is found that the external signals of suitable amplitude and phase can effect switching the trigger from one of its stable states into another. Limits of the stable operation are determined. An experimental verification included a hookup with balanced diodes, two tank circuits tuned to 1 Mc and 2 Mc; pumping frequency, 3 Mc; pumping signal amplitude, 1.5 v. Reverse-biased Si D-205 diodes were used as modulating capacitors. External 300-1500-microsec pulses with adjustable carrier frequency were employed. Stable switching of the trigger on a low-power signal was achieved. Orig. art. has: 3 figures and 36 formulas. [03]

SUB CODE: 09/ SUBM DATE: 09Oct64/ ORIG REF: 004/ ATD PRESS: 4222

Card 1/1 UDC: 621.373.93.018.1

APPROVED FOR RELEASE: 03/20/2001 CIA-RDP86-00513R001860910010-5"

"APPROVED FOR RELEASE: 03/20/2001 CIA-RDP86-00513R001860910010-5

BENDRIKOV, G.A.; KRASNUSHKIN, P.Ye.; REYKHRUDEL', E.M.; POTEMKIN, V.V.; MUSTEL', Ye.R.; RZHEVKIN, K.S.; IVANOV, I.V.; KHAHLAMOV, A.A.; TIKHONOV, Yu.V.; STRELKOVA, L.P.; KAPTSOV, L.N.; ORDANOVICH, A.Ye.; KHOKHLOV, R.V.; VORONIN, B.S.; BERESTOVSKIY, G.N.; KRASNOPEVTSEV, Yu.V.; MINAKOVA, I.I.; YASTREBTSEVA, T.N.; SEMENOV, A.A.; VINOGRADOVA, M.B.; KARPEYEV, G.A.; DRACHEV, L.A.; TROFIMOVA, N.B.; SIZOV, V.P.; RZHEVKIN, S.N.; VELIZHANINA, K.A.; NESTEROV, V.S.; SPIVAK, G.V., red.; NOSYREVA, I.A., red.; GEORGIYEVA, G.I., tekhn. red.

[Special physics practicum] Spetsial'nyi fizicheskii praktikum. Moskva, Izd-vo Mosk.univ. Vol.1. [Radio physics and electronics] Radiofizika i elektronika. Sost. pod red. G.V.Spivaka. 1960. 600 p.

(MIRA 13:6)

1. Professorsko-prepodavatel'skiy kollektiv fizicheskogo fakul'teta Moskovskogo universiteta im. M.V.Lomonosova (for all except Spivak, Nosyreva, Georgiyeva).

(Radio) (Electronics)

APPROVED FOR RELEASE: 03/20/2001 CIA-RDP86-00513R001860910010-5"

"APPROVED FOR RELEASE: 03/20/2001 CIA-RDP86-00513R001860910010-5

VORONIN, E.S.

[redacted]

Solutions of Weber's equation. Vest.Mosk.un. 12 no.1:8-10 '57.
(MLRA 10:8)

1.Moskovskiy universitet, Kafedra kolebaniy.
(Differential equations)

APPROVED FOR RELEASE: 03/20/2001 CIA-RDP86-00513R001860910010-5"

"APPROVED FOR RELEASE: 03/20/2001 CIA-RDP86-00513R001860910010-5

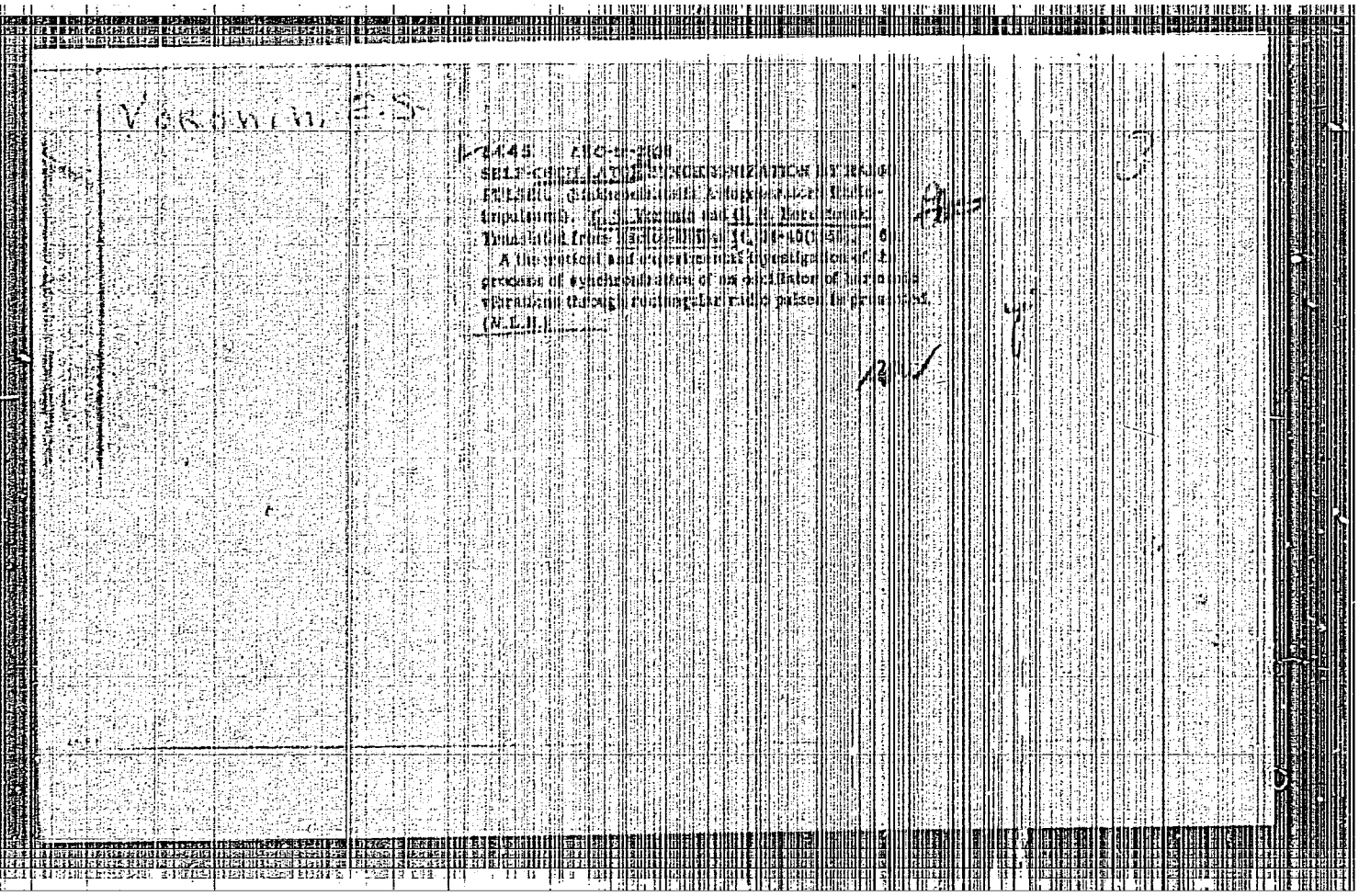

APPROVED FOR RELEASE: 03/20/2001 CIA-RDP86-00513R001860910010-5"

"APPROVED FOR RELEASE: 03/20/2001 CIA-RDP86-00513R001860910010-5

APPROVED FOR RELEASE: 03/20/2001 CIA-RDP86-00513R001860910010-5"

"APPROVED FOR RELEASE: 03/20/2001 CIA-RDP86-00513R001860910010-5

PA - 2570

AUTHOR VORONIN E.S., ROGATNEV I.I.

TITLE The unstable process in autogenerator with direct excitation by radio impulses. (Nestatsionarnyye protsessy v avtogeneratore, zhestko vozbuzhdayemom radioimpul'sami.- Russian)

PERIODICAL Radiotekhnika 1957, Vol 2, Nr 2, pp 144 - 149 (U.S.S.R.)
Received: 4/1957 Reviewed: 6/1957

ABSTRACT For the purpose of investigation a device was constructed which facilitated studying the adjustment of the amplitude and the phase of self-oscillations for the domain of synchronization as well as for that of pulsation for different working methods of the generator at different amplitudes and with a different duration of the influencing radio impulses.
There follows the description of the device.
Experiment showed that on the occasion of the synchronization of the autogenerator which by the influence exercised by large signals, is in a rigid state of excitation, an optimum state for adjustment of synchronic self-oscillations exists, which cannot be explained without taking the line currents of the lamp into account. Diagrams and a qualitative analysis for finding optimal conditions for the synchronisation of the autogenerator by radioimpulses are given on the occasion of the dependence of the latter upon the order of back coupling

CARD 1/2

APPROVED FOR RELEASE: 03/20/2001 CIA-RDP86-00513R001860910010-5"

"APPROVED FOR RELEASE: 03/20/2001 CIA-RDP86-00513R001860910010-5

PA - 2570

The unstable process in autogenerator with direct excitation by radio impulses.

the amplitude of the exterior electromotoric force and the duration of the radio impulse for the concrete scheme of the autogenerator. (8 ill. and 7 citations from Slav publications.)

ASSOCIATION: Physical Faculty of Moscow State University, "M.V.Lomonosov"
Presented by:
Submitted:
Available: Library of Congress.

Card 2/2

APPROVED FOR RELEASE: 03/20/2001 CIA-RDP86-00513R001860910010-5"

"APPROVED FOR RELEASE: 03/20/2001 CIA-RDP86-00513R001860910010-5

VORONIN, B.S.; BERESTOVSKIY, G.N.

Synchronizing a self-excited oscillator by pulses. Radiotekhnika 11 no.3:34-40 Mr '56. (MLRA 9:7)
(Oscillators, Electron-tube)

APPROVED FOR RELEASE: 03/20/2001 CIA-RDP86-00513R001860910010-5"

"APPROVED FOR RELEASE: 03/20/2001 CIA-RDP86-00513R001860910010-5

VORONIN, E. S., Cand Master Phys-Math Sci --(diss) "Investigating the synchronization of coherent oscillators (synchronization by radio impulses)". Moscow, 1957, 8 pp. [redacted] (Moscow State University im. M.V. Lomonosov. Physical Faculty), 100 copies (KL, No 41, 1957, p.106)

APPROVED FOR RELEASE: 03/20/2001 CIA-RDP86-00513R001860910010-5"

"APPROVED FOR RELEASE: 03/20/2001 CIA-RDP86-00513R001860910010-5

SUBJECT USSR / PHYSICS CARD 1 / 2 PA - 1216

AUTHOR VORONIN, E.S., BERESTOVSKIJ, G.N.

TITLE The Synchronization of an Autogenerator by Radio Pulses.

PERIODICAL Radiotechnika, 11, fasc. 3, 34-40 (1956)

Publ. 3 / 1956 reviewed 9 / 1956

The present work discusses the synchronization of a self-oscillation system (lamp generator) by rectangular radio pulses the carrier frequency p of which is near the frequency ω_o of the harmonic self-oscillations. The shortened equations for the self-oscillation system which is under the influence of an exterior force are: $dA/dt = \delta(A)A + (E_o \omega_o^2/2) \cos \varphi$, $d\varphi/dt = p - \omega_o - (E_o \ _o/2A) \cos \varphi$. Here A is the amplitude of self-oscillations, φ - phase difference between the current in the generator circuit and the exterior electromotoric force, E_o - the oscillation amplitude of the exterior electromotoric force. These equations are then simplified and transformed in consideration of initial conditions. $1/\delta_o (\delta_o = -(d\delta/dA|_{A=A_o}$. $.A_o > 0)$ is the relaxation time of the amplitude. If the initial phase φ_n is equal to the stationary value φ_o of the phase, then the phase becomes stationary immediately and the amplitude becomes stationary after a time of the order $1/\delta_o$. Synchronization takes place all the more quickly the smaller the difference between φ_n and φ_o will be. After the end of the impulse, the phase is modified in a linear manner proceeding from the end value of the pulse, and the amplitude returns to the stationary value after the time

APPROVED FOR RELEASE: 03/20/2001 CIA-RDP86-00513R001860910010-5"

"APPROVED FOR RELEASE: 03/20/2001 CIA-RDP86-00513R001860910010-5

Radiotechnika, 11, fasc.3, 34-40 (1956) CARD 2 / 2 PA - 1216

$1/\delta_o$.

Block schemes and a circuit diagram of the device are given. The modulator circuit is in accordance with the equilibrium scheme in order to eliminate the constant component of the pulses and in order to conserve the voltage at the load in form of rectangular radio pulses. The generator has an autotransformer back coupling, the frequency of the self-oscillations is 1 kc, and the amplitude is ~ 100 V. The generator circuit is inductively coupled with the load of the modulator. The synchronizing voltage and the voltage of the self-oscillations of the generator are transferred to a phase detector with symmetrical output, and from the output of the phase detector the voltage is transferred to an oscillograph by means of a cathode repeater. The stabilizing processes of the oscillations are analyzed mainly according to phase curves. The beginning of the phase curve agrees with the beginning of the pulse. The end of the pulse is characterized by a sharp break with transition to a "quasisinusoid". Several diagrams show a number of oscillograms.

All theoretical curves agree with experimental ones, and also the oscillograms of the self-oscillations of the generator on the occasion of the action of a synchronizing pulse confirm the correctness of theoretical derivations.

INSTITUTION:

APPROVED FOR RELEASE: 03/20/2001 CIA-RDP86-00513R001860910010-5"

"APPROVED FOR RELEASE: 03/20/2001 CIA-RDP86-00513R001860910010-5

KRAVCHENKO, A.T.; ALTSTEIN, A.D.; VORONIN, E.S.

Interference between influenza and Rous sarcoma viruses in chicks. Acta virol. (Praha) [Eng.] 9 no.2:130-136 Mr'65.

1. L.A. Tarasevich State Control Institute of Medical Biological Preparations, Moscow, U.S.S.R.

APPROVED FOR RELEASE: 03/20/2001 CIA-RDP86-00513R001860910010-5"

"APPROVED FOR RELEASE: 03/20/2001 CIA-RDP86-00513R001860910010-5

L 56657-65 EWT(1)/Eki(h) Peb

ACCESSION NR: AP5011880 UR/0120/65/000/002/0104/0109 621.316.729:621.373

AUTHOR: Yanayt, Yu. A.; Voronin, E. S.

TITLE: Using the method of brightness marks in the investigation of phase-establishing processes which occur during the synchronization of parametric generators

SOURCE: Pribory i tekhnika eksperimenta, no. 2, 1965, 104-109

TOPIC TAGS: parametric generator, parametric generator phase

ABSTRACT: A laboratory model of a phase-measuring device is described which displays, on the oscilloscope screen, the phase processes during synchronization. The phase of the parametric generator being studied is measured against the phase of a reference harmonic-wave source, the phase difference being recorded each period by brightness marks. Oscillograms of the phase processes in a tunnel-diode generator and in a two-circuit parametric generator operating as a three-

Card 1/2

APPROVED FOR RELEASE: 03/20/2001 CIA-RDP86-00513R001860910010-5"

"APPROVED FOR RELEASE: 03/20/2001 CIA-RDP86-00513R001860910010-5

L 59557-65

ACCESSION NR: AP5011880

position trigger are presented. This phase-measuring device can handle the processes with rapidly-changing phase shifts which is its claimed advantage over the phase-detector and other known methods. Orig. art. has: 7 figures.

ASSOCIATION: Moskovskiy gosudarstvennyy universitet im. M. V. Lomonosova (Moscow State University)

SUBMITTED: 14Mar64 ENCL: 00 SUB CODE: EC

NO REF SOV: 003 OTHER: 000

Card 2/2

APPROVED FOR RELEASE: 03/20/2001 CIA-RDP86-00513R001860910010-5"

"APPROVED FOR RELEASE: 03/20/2001 CIA-RDP86-00513R001860910010-5

BENDRIKOV, G.A.; KRASNUSHKIN, P.Ye.; REYKHRUDEL', E.M.; POTEMKIN, V.V.; MUSTEL', Ye.R.; RZHEVKIN, K.S.; IVANOV, I.V.; KHAHLAMOV, A.A.; TIKHONOV, Yu.V.; STRELKOVA, L.P.; KAPTSOV, L.N.; ORDANOVICH, A.Ye.; KHOKHLOV, R.V.; VORONIN, E.S.; BERESTOVSKIY, G.N.; KHAINOPEVTSEV, Yu.V.; MINAKOVA, I.I.; YASTREBTSEVA, T.N.; SEMENOV, A.A.; VINOGRADOVA, M.B.; KARPEYEV, G.A.; DRACHEV, L.A.; TROFIMOVA, N.B.; SIZOV, V.P.; RZHEVKIN, S.N.; VELIZHANINA, K.A.; NESTEROV, V.S.; SPIVAK, G.V., red.; NOSYREVA, I.A., red.; GEORGIYEVA, G.I., tekhn. red.

[Special practical manual in physics] Spetsial'nyi fizicheskii praktikum. Moskva, Izd-vo Mosk.univ. Vol.1. [Radiophysics and electronics] Radiofizika i elektronika. 1960. 600 p. (MIRA 13:7)

1. Professorsko-prepodavatel'skiy sostav otdeleniya radiofiziki fizicheskogo fakul'teta Moskovskogo gosudarstvennogo universiteta (for all, except Spivak, Nosyreva, Georgiyeva).
(Radioactivity) (Electronics)

APPROVED FOR RELEASE: 03/20/2001 CIA-RDP86-00513R001860910010-5"

"APPROVED FOR RELEASE: 03/20/2001 CIA-RDP86-00513R001860910010-5

VORONIN, E.S.

AID P - 4542

Subject : USSR/Electronics

Card 1/2 Pub. 90 - 5/9

Authors : Voronin, E. S. and G. N. Berestovskiy

Title : Synchronization of a self-oscillator with radio-frequency impulses.

Periodical : Radiotekhnika, 3, 34-40, Mr 1956

Abstract : The authors investigated the problem of establishing conditions for the synchronization of self-oscillating systems subjected to the action of radio-frequency impulses which have a carrier frequency close to the frequency of harmonic self-induced oscillations. The authors studied the problem analytically and established the phase and amplitude of the self-oscillations. They then checked the results experimentally for a frequency of 1Mc and found that these corresponded closely with the theoretical ones. They conclude the article by stating that the time of synchronization depends in a high measure on the

APPROVED FOR RELEASE: 03/20/2001 CIA-RDP86-00513R001860910010-5"

"APPROVED FOR RELEASE: 03/20/2001 CIA-RDP86-00513R001860910010-5

Radiotekhnika, 3, 34-40, Mr 1956 AID P - 4542

Card 2/2 Pub. 90 - 5/9

initial phase. Twelve diagrams and oscillograms, 2 Soviet references (1952, 1954).

Institution : None

Submitted : Ja 29, 1955

APPROVED FOR RELEASE: 03/20/2001 CIA-RDP86-00513R001860910010-5"

"APPROVED FOR RELEASE: 03/20/2001 CIA-RDP86-00513R001860910010-5

1. VORONIN, E.V., ENG.

2. USSR (600)

4. Welding

7. Machine for automatic welding. Avtog.delo 23 no.10, 1952.

9. Monthly List of Russian Accessions, Library of Congress, January 1953. Unclassified.

APPROVED FOR RELEASE: 03/20/2001 CIA-RDP86-00513R001860910010-5"

"APPROVED FOR RELEASE: 03/20/2001 CIA-RDP86-00513R001860910010-5

KUL'SHARYPOV, F.; VORONIN, F.

Production of consumers' goods and accumulation of a consumers' goods fund. Fin. SSSR 19 no.12:81-84 D '58. (MIRA 11:12)
(Chelyabinsk Province--Manufactures)

APPROVED FOR RELEASE: 03/20/2001 CIA-RDP86-00513R001860910010-5"

"APPROVED FOR RELEASE: 03/20/2001 CIA-RDP86-00513R001860910010-5

VORONIN, F.G., master.

Wrench for eliminating bad contacts. Energetik 5 no.3:26-27 Mr '57. (MLRA 10:3)

(Electric relays)

APPROVED FOR RELEASE: 03/20/2001 CIA-RDP86-00513R001860910010-5"

"APPROVED FOR RELEASE: 03/20/2001 CIA-RDP86-00513R001860910010-5

VORONIN, Fedor Ivanovich; SERKO, G.S., red.; KLAPTSOVA, T.F., tekhn. red.

[Ship docking at floating docks] Dokovanie sudov v plavuchikh dokakh. Moskva, Izd-vo "Morskoi transport," 1962. 83 p. (MIRA 15:5)

(Ships—Maintenance and repair) (Docks)

APPROVED FOR RELEASE: 03/20/2001 CIA-RDP86-00513R001860910010-5"

"APPROVED FOR RELEASE: 03/20/2001 CIA-RDP86-00513R001860910010-5

VORONIN, Fedor Ivanovich; ANAN'IN, V.I., redaktor; TIKHONOVA, Ye.A., tekhnicheskiy redaktor

[Navigating under difficult conditions] Plavanie v tiazhelykh usloviiakh. Moskva, Izd-vo "Morskoi transport," 1956. 177 p. (MLRA 9:7)
(Navigation)

APPROVED FOR RELEASE: 03/20/2001 CIA-RDP86-00513R001860910010-5"

"APPROVED FOR RELEASE: 03/20/2001 CIA-RDP86-00513R001860910010-5

VORONIN, F.M., inzh.

Lessening the fanning of piling in straight-line walls. (MIRA 10:10)
Gidr.stroi. 26 no.10:52-53 O '57.
(Piling (Civil engineering))

APPROVED FOR RELEASE: 03/20/2001 CIA-RDP86-00513R001860910010-5"

"APPROVED FOR RELEASE: 03/20/2001 CIA-RDP86-00513R001860910010-5

VORONIN, F. N.

VORONIN, F. N.: "The variability of perch, its biological properties, and methods of developing valuable varieties of fish under the reservoir conditions of the Belorussian SSR." Belorussian State U imeni V. I. Lenin. Minsk, 1956. (Dissertation for the Degree of Candidate in Biological Sciences).

SO: Knizhnaya Letopis', No 23, 1956

APPROVED FOR RELEASE: 03/20/2001 CIA-RDP86-00513R001860910010-5"

"APPROVED FOR RELEASE: 03/20/2001 CIA-RDP86-00513R001860910010-5

VORONIN, Fedor Nikiforovich, kand.biolog.nauk; IVANOV, V., red.; KALECHITS, G., tekhn.red.

[Fishes of the White Russian S.S.R.] Ryby BSSR. Minsk, Gos.izd-vo BSSR, Red.sel'khoz.lit-ry, 1957. 81 p. (MIRA 12:7)

(White Russia--Fishes)

APPROVED FOR RELEASE: 03/20/2001 CIA-RDP86-00513R001860910010-5"

"APPROVED FOR RELEASE: 03/20/2001 CIA-RDP86-00513R001860910010-5

VOROMIN, F.S.

Effect of compressibility on the coefficient of frictional resistance in case of a turbulent gas flow. Inzh.-fiz. zhur. no.11: 81-85 N '59 (MIRA 13:3)
(Fluid dynamics)

APPROVED FOR RELEASE: 03/20/2001 CIA-RDP86-00513R001860910010-5"

"APPROVED FOR RELEASE: 03/20/2001 CIA-RDP86-00513R001860910010-5

VORONIN, F.S.

Adiabatic turbulent gas flow in a cylindrical tube. Inzh.-fiz. zhur. 8 no.1:31-34 Ja '65. (MIRA 18:3)

APPROVED FOR RELEASE: 03/20/2001 CIA-RDP86-00513R001860910010-5"

"APPROVED FOR RELEASE: 03/20/2001 CIA-RDP86-00513R001860910010-5

VORONIN, F.S., kand.tekhn.nauk; LEL'CHUK, V.D., kand.fiziko-matem.nauk

Heat transfer from a gas to a wall during turbulent flow within a pipe. Teploenergetika 10 no.4:61-66 Ap '63. (MIRA 16:3)

1. Vsesoyuznyy teplotekhnicheskiy institut.
(Heat--Transmission) (Fluid dynamics)

APPROVED FOR RELEASE: 03/20/2001 CIA-RDP86-00513R001860910010-5"

"APPROVED FOR RELEASE: 03/20/2001 CIA-RDP86-00513R001860910010-5

1.1000

68766

S/170/59/002/11/012/024
B014/B014

AUTHOR: Voronin, F. I.

TITLE: The Influence Exercised by the Compressibility on the Coefficient of Frictional Resistance in the Case of Turbulent Gas Flow

PERIODICAL: Inzhenerno-fizicheskiy zhurnal, 1959, Vol 2, Nr 11, pp 81-85 (USSR)

ABSTRACT: Equation (1) describes the tangential stress in a turbulent flow, and provided the tangential stress is linear equation (2) describes the velocity distribution over an arbitrary cross section of a tube. For this formula the author gives several constants which were recommended by N. V. Ilyukhin (Ref 2). (3) yields the formula for the gas density. Proceeding from these formulas the author obtains formula (12) for the local coefficient of frictional resistance. Formula (13) is used to estimate the influence exercised by the compressibility on this coefficient. Curve 1 which, according to formula (13), shows the dependence of the coefficient of frictional resistance on the Mach number M, and curve 2 which was calculated from a formula suggested by B. A. Zhestkov (Ref 3), are diagrammatically shown in figure 1. The experimental values obtained by B. A. Zhestkov from a tube 22 mm in diameter within the Mach number range 1.2 - 4.3 are also contained in this diagram. It is shown that there is close agreement with curve 1. The position of

Card 1/2

APPROVED FOR RELEASE: 03/20/2001 CIA-RDP86-00513R001860910010-5"

"APPROVED FOR RELEASE: 03/20/2001 CIA-RDP86-00513R001860910010-5

68766

The Influence Exercised by the Compressibility on the Coefficient of Frictional Resistance in the Case of Turbulent Gas Flow

S/170/59/002/11/012/024
B014/B014

curve 2 indicates that the influence of compressibility has been overestimated. The evaluation of experimental results concerning flows in tubes and around certain bodies prove that formula (13) is very useful for these purposes (Fig 2). There are 2 figures, 1 table, and 13 references, 7 of which are Soviet.

4

Card 2/2

APPROVED FOR RELEASE: 03/20/2001 CIA-RDP86-00513R001860910010-5"

"APPROVED FOR RELEASE: 03/20/2001 CIA-RDP86-00513R001860910010-5

L 41771-65 EWP(m)/EWT(1)/FCS(k)/EWA(d)/EWA(h) Pd-1

ACCESSION NR: AP5005760 S/0170/65/008/001/0031/0034

AUTHOR: Voronin, F. S.

TITLE: Concerning adiabatic turbulent gas flow in a cylindrical tube

SOURCE: Inzhenerno-fizicheskiy zhurnal, v. 8, no. 1, 1965, 31-34

TOPIC TAGS: adiabatic gas flow, turbulent gas flow, Reynolds number, heat exchange, friction coefficient

ABSTRACT: An analytic solution is presented for the problem of uniform adiabatic turbulent flow of a compressible gas in a cylindrical tube, with allowance for the variation of the Reynolds number along the tube and for the influence of compressibility on the friction resistance coefficient. The results indicate that neglect of the variation of the Reynolds number along the tube results in an overestimate of the relative velocity throughout the tube, and also in a lower value of the static pressure. These conclusions are borne out by comparison with experimental data by others. Orig. art. has: 3 figures and 10 formulas.

ASSOCIATION: None

SUBMITTED: 29Apr64 ENCL: 00

Card 1/2

APPROVED FOR RELEASE: 03/20/2001 CIA-RDP86-00513R001860910010-5"

"APPROVED FOR RELEASE: 03/20/2001 CIA-RDP86-00513R001860910010-5

VORONIN, G.; KRAVCHENKO, K., inzh.; MELASHCHENKO, V., inzh.; MECHEV, A., ~~inzh.~~

Tank cars of the near future. Pozh.delo 7 no.11:22-24 N '61. (MIRA 14:11)

1. Nachal'nik konstruktorskogo otdela sektsii protivopozharnoy tekhniki pri Gosudarstvennom Komitete Soveta Ministrov SSSR po avtomatizatsii i mashinostroyeniyu (for Voronin).
(Fire engines) (Tank cars)

APPROVED FOR RELEASE: 03/20/2001 CIA-RDP86-00513R001860910010-5"

"APPROVED FOR RELEASE: 03/20/2001 CIA-RDP86-00513R001860910010-5

VASIL'YEV, V., inzh.; VORONIN, G., inzh.; MECHEV, A., inzh.

Water tank truck ATs-30(130)-63. Pozh. delo 9 no.4:24 Ap '63. (MIRA 16:4)

(Fire departments--Equipment and supplies)

APPROVED FOR RELEASE: 03/20/2001 CIA-RDP86-00513R001860910010-5"

"APPROVED FOR RELEASE: 03/20/2001 CIA-RDP86-00513R001860910010-5

VORONIN, G., insh.

Adoption of the use of plastics is an urgent task. Pozh.delo 6 no.6:22 Je '60. (MIRA 13:7)
(Plastics) (Fire departments--Equipment and supplies)

APPROVED FOR RELEASE: 03/20/2001 CIA-RDP86-00513R001860910010-5"

"APPROVED FOR RELEASE: 03/20/2001 CIA-RDP86-00513R001860910010-5

VORONIN, G., inzh.

The PMG motor water tank. Pozh. delo 5 no.10:27 O '59.
(MIRA 13:2)

(Fire departments--Equipment and supplies)

APPROVED FOR RELEASE: 03/20/2001 CIA-RDP86-00513R001860910010-5"

"APPROVED FOR RELEASE: 03/20/2001 CIA-RDP86-00513R001860910010-5

VORONIN, G., inzh.

New developments on which designers are now working. Posh.delo 6 no.10:22-23 O '60. (MIRA 13:10)

1. Nachal'nik konstruktorskogo otdela Osobogo konstruktorskogo byuro No.8.

(Fire engines--Design and construction)

APPROVED FOR RELEASE: 03/20/2001 CIA-RDP86-00513R001860910010-5"

"APPROVED FOR RELEASE: 03/20/2001 CIA-RDP86-00513R001860910010-5

VORONIN, G.

Key findings of a council. Grazhd. av. 20 no.6:10-11 Je '63. (MIRA 16:8)

1. Nachal'nik kluba Krasnokutskogo letnogo uchilishcha Grazhdanskogo vozdushnogo flota.
(Krasnokutsk—Clubs)

APPROVED FOR RELEASE: 03/20/2001 CIA-RDP86-00513R001860910010-5"

"APPROVED FOR RELEASE: 03/20/2001 CIA-RDP86-00513R001860910010-5

L 44569-66 EWT(1)/EWP(m)/EEC(k)-2 SCTB TT/DD/GW

ACC NR: AP6030910 SOURCE CODE: UR/0209/66/000/009/0044/0047

AUTHOR: Voronin, G. (Doctor of technical sciences; Professor); Polivoda, A. (Candidate of biological sciences); Vinogradov, Ye. (Engineer)

ORG: none

TITLE: Spacecraft life-support systems

SOURCE: Aviatsiya i kosmonavtika, no. 9, 1966, 44-47

TOPIC TAGS: manned spaceflight, space biology, life support system

ABSTRACT: Problems in the design, requirements, and operation of spacecraft life-support systems (storage systems, physical and chemical regeneration systems, bioregeneration systems) are discussed. The daily life support requirements of a 70-kg man in space are given as: 600 liters of O_2, 2.3 kg H_2O, and 0.6—0.7 kg of foodstuffs (100—150 g of protein; 70—90 g of fat; 420—500 g of carbohydrate). Water makes up 4/5 the total weight of food rations. O_2 supplies can be stored in compressed cylinders at 500—700 atm, in a solid or near-solid state at low temperature, or in chemically bound form (superoxide compounds or in the form of H_2O_2). The advantage of superoxide systems is their simplicity and efficiency; they simultaneously yield O_2 while absorbing CO_2. The main disadvantage of such systems for prolonged spaceflights would be weight. Physical or chemical regenerations are even more complicated than storage systems and neither type would be suitable for prolonged flights

Card 1/2

APPROVED FOR RELEASE: 03/20/2001 CIA-RDP86-00513R001860910010-5"

"APPROVED FOR RELEASE: 03/20/2001 CIA-RDP86-00513R001860910010-5

L 44569-66

ACC NR: AP6030910

However, their use for emergency backup is not discounted. Also, some components of these types of systems could be included in biological regenerations systems, in particular, computer controlled, algae regeneration systems which yield O_2 and food. The various parameters of algal cultivation and growth are discussed in terms of the conditions necessary for maximum productivity. Automatic control of a biological regeneration system requires the following: methods of biological investigation to elucidate parameters which most completely reflect the state of the biological specimen and to establish concrete trends in various biological processes; information in the form of signals which reflect these processes; and finally, creation of control commands for actuating devices in a biological regeneration system. The basic growth parameters of algae suspensions are discussed in terms of input data for an automatic control system. The authors conclude that a brief review of the available literature (none cited) shows that the development of life-support systems for prolonged space-flights is one of the most important problems confronting contemporary cosmonautics. [CD]

SUB CODE: 06/ 22/ SUBM DATE: none/ ATD PRESS: 5079

Card 2/2

APPROVED FOR RELEASE: 03/20/2001 CIA-RDP86-00513R001860910010-5"

"APPROVED FOR RELEASE: 03/20/2001 CIA-RDP86-00513R001860910010-5

L 25635-65 EPA(w)-2/EWG(m)/EWT(1)/EWT(m)/EEC(t)/EWP(b)/EPA(sp)-2/T/EWA(m)-2/
EWP(t) Pi-4/Po-4/Pz-6/Pab-10 IJP(c) AT/JD/JG
ACCESSION NR: AP4047988 S/0076/64/038/010/2487/2489

AUTHOR: Voronin, G. F.

TITLE: Calculation of the total effective collision cross sections of atoms by distribution of velocities in a molecular beam

SOURCE: Zhurnal fizicheskoy khimii, v. 38, no. 10, 1964, 2487-2489

TOPIC TAGS: collision cross section, cesium potassium, molecular beam velocity

ABSTRACT: The effective collision cross section for cesium and potassium was determined by passing the material, in vapor form, through a collimated slit and measuring the intensity of molecules having a given speed. The following equation holds for velocities in accordance with Maxwell's Law, provided no intermolecular collisions interfere: $dI(c) = 2I_0 \exp(-c^2/\alpha^2)c^3 dc/\alpha^4$, (1)

where dI(c) is the number of molecules having speeds in the range c ± dc and α is $(2kT/m)^{1/2}$, where m is the mass of the molecule at T°K and k = Boltzmann con-

Card 1/3

APPROVED FOR RELEASE: 03/20/2001 CIA-RDP86-00513R001860910010-5"

"APPROVED FOR RELEASE: 03/20/2001 CIA-RDP86-00513R001860910010-5

L 25635-65
ACCESSION NR: AP4047988

stant; I_0 is the overall intensity. An approximate function for dI was derived by I. Estermann, O. C. Simpson, O. Stern (Phys. Rev., 71, 238, 1947) with molecular collisions

$$dI'(c) = \exp(-\bar{P})\,dI(c), \qquad (1)$$

where $\bar{P} = p\sigma^2 F(c/\alpha)B(S)/2kT$, where $\bar{P}$ is the average number of collisions originating on one particle in the beam, p is the vapor pressure at the origin, σ is the effective cross section, $F(c/\alpha)$ is a function tabulated in the given reference, and B(S) is a calculable function of the slit. A derivation of this function is given. From the above equation it was approximated that $\exp(-\bar{P}) = I'(c)/I(c)$. This was modified to: $\exp(\bar{P}_{max} - \bar{P}) = I'(c)/I(c)$, and then put into the form

$$c^2 A(c/\alpha)(p/T) = \lg[I'(c)/I(c)]$$

where

$$A(c/\alpha) = -B(S)[F(c/\alpha) - F(c_{max}/\alpha)]/4{,}000\,k.$$

It was found that $c_{max} = \sqrt{3}\alpha$ and B(S) = 0.062 cm. The effective collision cross section for Cs was found to be 24.4Å, which is in good agreement with σ_{Cs-Cs} = 27.3Å found by Estermann et al. The value for K, σ_{K-K} = 8.74Å was too low by 10-20%; this was explained due to the low resolution of the apparatus. Orig. art. has: 1 figure and 1 table and 9 equations

Card 2/3

APPROVED FOR RELEASE: 03/20/2001 CIA-RDP86-00513R001860910010-5"

"APPROVED FOR RELEASE: 03/20/2001 CIA-RDP86-00513R001860910010-5

L 25635-65
ACCESSION NR: AP4047988

ASSOCIATION: Moskovskiy gosudarstvennyy universitet im. M. V. Lomonosova (Moscow State University)

SUBMITTED: 11Dec63 ENCL: 00 SUB CODE: VP

NR REF SOV: 001 OTHER: 008

Card 3/3

APPROVED FOR RELEASE: 03/20/2001 CIA-RDP86-00513R001860910010-5"

"APPROVED FOR RELEASE: 03/20/2001 CIA-RDP86-00513R001860910010-5

SOV/76-33-9-22/37

5(2)

AUTHORS: Voronin, G. F., Yevseyev, A. M.

TITLE: Thermodynamic Properties of Germanium - Zinc Alloys

PERIODICAL: Zhurnal fizicheskoy khimii, 1959, Vol 33, Nr 9, pp 2024 - 2029 (USSR)

ABSTRACT: The authors investigated the thermodynamic properties of liquid and solid germanium - zinc alloys at 342 - 466°C by measuring the pressure of saturated zinc vapor. The method applied is based on a method previously described (Ref 1), which made use of an effusion chamber (thin-walled quartz ampul - 0.22 g), a quartz spring balance (Fig 1) and continuous weighing. The chamber was evacuated to $1 \cdot 10^{-5}$ torr, temperature maintained within a limit of ± 1°, and the change in weight read on a cathetometer. Due to the fact that the weighed quantity of Zn and Ge and the sensitivity of the balance are known, the composition of the alloy can be ascertained at any instant according to equation (1). The resultant values of the evaporation heat of pure liquid Zn at 435° (26.9 kcal/mol), of solid Zn at 380° (28.3 kcal/mol), and the melting point of the alloy at different compositions are in good agreement with corresponding

Card 1/2

APPROVED FOR RELEASE: 03/20/2001 CIA-RDP86-00513R001860910010-5"

"APPROVED FOR RELEASE: 03/20/2001 CIA-RDP86-00513R001860910010-5

Thermodynamic Properties of Germanium - Zinc Alloys SOV/76-33-9-22/37

data of publications. The authors further calculated the activity coefficient, the partial heat of mixing, the isobaric mixing potential for Zn (at 435° C), and the corresponding values for Ge (Table). The mutual solubility of Zn and Ge is weak in solid phase, which is explained by the difference in the nature of the interatomic bonds. The penetration of germanium atoms into the zinc lattice leads to strong deformation of the latter and, consequently, to energy absorption. The system exhibits great negative deviation from perfect solutions in the presence of a strongly positive heat of mixing. It is assumed that the effects arising from the destruction of the zinc structure (during the penetration of germanium atoms) also appear in liquid Ge-Zn alloys. However, this problem needs further investigations. There are 5 figures, 1 table, and 9 references, 4 of which are Soviet.

ASSOCIATION: Moskovskiy gosudarstvennyy universitet im. M. V. Lomonosova (Moscow State University imeni M. V. Lomonosov)

SUBMITTED: February 27, 1958

Card 2/2

APPROVED FOR RELEASE: 03/20/2001 CIA-RDP86-00513R001860910010-5"

"APPROVED FOR RELEASE: 03/20/2001 CIA-RDP86-00513R001860910010-5

05823

5 (4)

AUTHORS: Voronin, G. F., Yeveyev, A. M. SOV/76-33-10-21/45

TITLE: Thermodynamic Properties of Liquid Lead-tin Alloys

PERIODICAL: Zhurnal fizicheskoy khimii, 1959, Vol 33, Nr 10, pp 2245 - 2248 (USSR)

ABSTRACT: There are no data available in publications on the entropy and free energy of formation of lead-tin alloys. The authors therefore investigated the thermodynamic properties of the lead-tin system within the temperature range 730-790 C by the method of pressure measurement of saturated lead vapors. The evaporation rate of the metals out of the solutions was measured with the help of continuous weighing. A quartz ampoule served as effusion chamber which was suspended on a spring balance. The latter was a spiral (of a quartz filament) and had a sensitivity of 35 mm/g at a maximum load of 1 g. The temperature was measured in the device (Fig 1) by means of a platinum-rhodium thermocouple and a PPTV-1 potentiometer. For this purpose, the authors employed a vacuum of $1 \cdot 10^{-4}$ mm Hg. The volatile component in the determinations was lead. The method used for determining the activity of metals in liquid alloys is similar to that devised by Knudsen for vapor pressure measurement. The thermodynamic functions of

Card 1/2

APPROVED FOR RELEASE: 03/20/2001 CIA-RDP86-00513R001860910010-5"

"APPROVED FOR RELEASE: 03/20/2001 CIA-RDP86-00513R001860910010-5

05823

Thermodynamic Properties of Liquid Lead-tin Alloys SOV/76-33-10-21/45

the lead-tin system (Table) were calculated from the activity of lead, which in turn was calculated according to equation (3) and data on the rate of evaporation out of the alloy (as compared to those of pure lead). The resultant data on the development of the integral mixing heats in dependence on the concentration of the lead-tin alloy (Fig 2) differed from those of direct calorimetric measurements by Kawakami (Ref 1). They are in better agreement with those obtained by Tayler (Ref 3) for solid solutions. This indicates the similarity of molecular interaction in solid and liquid lead-tin alloys. Herefrom it resulted that lead-tin alloys had a microheterogeneous structure as was also assumed by Ye. G. Shvidkovskiy (Ref 6). Calculations by Samson-Himmelstjerna (Ref 4) indicate that the present data on the mixing heats are more reliable than those contained in reference 1. There are 2 figures, 1 table, and 8 references, 3 of which are Soviet.

ASSOCIATION: Moskovskiy gosudarstvennyy universitet im. M. V. Lomonosova (Moscow State University imeni M. V. Lomonosov)

SUBMITTED: October 2, 1957

Card 2/2

APPROVED FOR RELEASE: 03/20/2001 CIA-RDP86-00513R001860910010-5"

"APPROVED FOR RELEASE: 03/20/2001 CIA-RDP86-00513R001860910010-5

S/189/60/000/003/002/003
B002/B056 82404

5.4300

AUTHORS: Yevseyev, A. M., Voronin, G. F.

TITLE: The Problem of the Cell-group Theory of Liquids

PERIODICAL: Vestnik Moskovskogo universiteta. Seriya 2, khimiya, 1960, No. 3, pp. 22 - 23

TEXT: Within the framework of the cell theory it is, in principle, possible to calculate the correlations between the motions of neighboring particles by uniting several cells into one group and calculating the sum of states. This idea was suggested for the first time in Ref. 1. Thus, it is possible to determine the statistical weight of each group integral in the manner as suggested by one of the authors in Ref. 2. The Hamiltonian of a system of N particles is represented as the summation over the groups of particles: $H(p_1 \ldots p_N, q_1 \ldots q_N) = \sum_{j=1}^{m} H_{sj}(p_i \ldots p_{i+sj-1}, q_i \ldots q_{i+sj-1})$. Here, p_i, q_i are momentum and coordinate of the i-th

Card 1/3

APPROVED FOR RELEASE: 03/20/2001 CIA-RDP86-00513R001860910010-5"

"APPROVED FOR RELEASE: 03/20/2001 CIA-RDP86-00513R001860910010-5

particle, m - the total number of cell groups, s - the number of particles in the cell group. By putting the expression:

$Q_{sj} = \int \exp\left\{-\beta\, H_{sj}(p_i \ldots p_{i+sj-1},\, q_i \ldots q_{i+sj-1})\right\} dp_i \ldots dp_{i+sj-1} \times$
$\times dq_i \ldots dq_{i+sj-1}$ for the integral over the cell group, the sum of states of the system may be written down in the following form:

$Q_N = \frac{1}{N!} \prod_{j=1}^{m} g_{sj} Q_{sj}$. Here, g_{sj}, the statistical weight of the j-th integral, is equal to the number of possibilities of the distribution of a group of s distinguishable particles over N cells, where not more than one particle corresponds to each cell, i.e., $g_{sj} = \frac{N!}{(N-Sj)!} g_{sj} = \frac{N!}{(N-S)!}$.
In the case of a perfect gas the correlation between the motion of the atoms in the cells vanishes, i.e., $s \to 1$, $m = N$ and $g_{sj} = N$, and

$Q_{sj} = \lambda^{3/2} \frac{V}{N}$, $Q_N = \lambda^{3N/2} \frac{V^N}{N!}$, $\lambda = \frac{2\pi mkT}{h^2}$. Consequently, the correction

APPROVED FOR RELEASE: 03/20/2001 CIA-RDP86-00513R001860910010-5"

"APPROVED FOR RELEASE: 03/20/2001 CIA-RDP86-00513R001860910010-5

The Problem of the Cell-group Theory of Liquids S/189/60/000/003/002/003
B002/B056 82404

for the "collective entropy" is not introduced into the theory from outside. In the crystal, the motions of all atoms are interrelated. At sufficiently low temperatures, a group of N cells must be studied, i.e., $s = N$ and $m = 1$. Consequently, $Q_N = \frac{N!}{N!} Q_{sj}$. Furthermore, Q_{sj} may be expressed as the product of the sums of states of 3N harmonic oscillators, which leads to the Debye crystal. The cell-group model is obviously the best means of reproducing A. S. Predvoditelev's conceptions of the two forms of motion of atoms in a liquid (Ref. 3). If the single atoms oscillate round their equilibria in a field of N-1 atoms, it is possible, by means of the cell-group model, to describe the second "crystalline" component of the motion of atoms in a field of N--3 atoms. There are 3 references: 2 Soviet and 1 Dutch.

ASSOCIATION: Kafedra fizicheskoy khimii (Chair of Physical Chemistry)

SUBMITTED: October 17, 1959

Card 3/3

APPROVED FOR RELEASE: 03/20/2001 CIA-RDP86-00513R001860910010-5"

"APPROVED FOR RELEASE: 03/20/2001 CIA-RDP86-00513R001860910010-5

YEVSEYEV, A.M.; VORONIN, G.F.

Cellular-group theory of solutions. Zhur. fiz. khim. 34 no. 11:2579-2582 N '60. (MIRA 14:1)

1. Moskovskiy gosudarstvennyy universitet im. M.V. Lomonosova. (Solution (Chemistry))

APPROVED FOR RELEASE: 03/20/2001 CIA-RDP86-00513R001860910010-5"

"APPROVED FOR RELEASE: 03/20/2001 CIA-RDP86-00513R001860910010-5

37803

S/120/62/000/002/033/047
E194/E435

18.8400

AUTHORS: Voronin, G.F., Yevseyev, A.M., Alekhin, S.P.

TITLE: Determination of the molecular composition distribution of the vapours of metals and alloys

PERIODICAL: Pribory i tekhnika eksperimenta, no.2, 1962, 141-142

TEXT: In analysing the properties of condensing phases, knowledge is required about the molecular composition of vapour above the surface of a solid or liquid substance, compound or solution. This article describes a device which analyses the velocity of molecules evaporated in a chamber. The chamber is located below two coaxial rotating discs the lower of which, made of dural, carries four radial slots ranging in width from 0.3 to 2.4°. The vaporized material is deposited on the upper disc of polished transparent plastic, the deposit density distribution depends on the molecular velocity in the vapour. The vapour composition and the vaporization factors of fractions of different molecular composition may be calculated from the velocity distribution by a formula similar to that of O.Stern (Ref.2: Z. Phys., v.41, 1927, 563). The discs are 180 mm diameter

Card 1/3

APPROVED FOR RELEASE: 03/20/2001 CIA-RDP86-00513R001860910010-5"

"APPROVED FOR RELEASE: 03/20/2001 CIA-RDP86-00513R001860910010-5

and the distance between tham may range from 70 to 180 mm; they are driven at speeds up to 15000 rpm, the speed being measured by comparing the frequency of signals picked up from a photo cell illuminated through the slots against a standard audio-frequency generator. The substance contained in a cylindrical tantalum crucible is vaporized in a small electric furnace with molybdenum heaters and the molecular beam passes through the lower disc and two collimator slots before reaching the upper disc. The density of deposit on the upper disc is measured by a photo cell photometer. The equipment is evacuated to a vacuum of 5×10^{-6} to 1×10^{-5} mm Hg by a vacuum pump and two diffusion pumps. The test procedure is described, a reference deposit is first produced with the discs rotating very slowly, and then vaporization is carried out with the discs running at the required speeds until a visible trace has been obtained from each of the four slots. The narrower slots give the more accurate results but the wider afford the possibility of discovering the presence in the vapour of molecular fractions of low concentration. Results are quoted of an eight-hour test

APPROVED FOR RELEASE: 03/20/2001 CIA-RDP86-00513R001860910010-5"

"APPROVED FOR RELEASE: 03/20/2001 CIA-RDP86-00513R001860910010-5

Determination of the molecular ... S/120/62/000/002/033/047
E194/E435

on antimony. There are 2 figures.

ASSOCIATION: Khimicheskiy fakul'tet MGU
(Chemistry Division MGU)

SUBMITTED: July 29, 1961

Card 3/3

APPROVED FOR RELEASE: 03/20/2001 CIA-RDP86-00513R001860910010-5"

"APPROVED FOR RELEASE: 03/20/2001 CIA-RDP86-00513R001860910010-5

L 16928-63 EWT(m)/BDS S/076/63/037/004/020/029

50

AUTHOR: Voronin, G. F.

TITLE: Determination of vapor composition from molecular velocities

PERIODICAL: Zhurnal fizicheskoy khimii, V. 37, No. 4, 1963, 897-899

TEXT: The principles of the design and operation of a mechanical analyzer of the velocities of molecules are described. The analyzer has rectangular apertures for the analyzing disc. Formulas are derived which are necessary in using the analyzer to determine the molecular composition of the vapor. There are 2 figures. The most important English-language reference reads as follows: I. Estermann, O. C. Simpson, O. Stern, Phys. Rev., 71, 288, 1947.

ASSOCIATION: Moskovskiy gosudarstvennyy universitet imeni M. V. Lomonosova (Moscow State University imeni M. V. Lomonosov)

SUBMITTED: May 26, 1962

Card 1/1

APPROVED FOR RELEASE: 03/20/2001 CIA-RDP86-00513R001860910010-5"

"APPROVED FOR RELEASE: 03/20/2001 CIA-RDP86-00513R001860910010-5

VORONIN, G.F.; YEVSEYEV, A.M.

Composition of equilibrium antimony vapor. Zhur.fiz.khim. 37 no.7: 1616-1619 Jl '63. (MIRA 17:2)

1. Moskovskiy gosudarstvennyy universitet.

APPROVED FOR RELEASE: 03/20/2001 CIA-RDP86-00513R001860910010-5"

"APPROVED FOR RELEASE: 03/20/2001 CIA-RDP86-00513R001860910010-5

VORONIN, G.F.

Determination of the vapor composition by analyzing molecule velocities. Zhur. fiz. khim. 37 no.4:897-899 Ap '63. (MIRA 17:7)

1. Moskovskiy gosudarstvennyy universitet imeni M.V. Lomonosova.

APPROVED FOR RELEASE: 03/20/2001 CIA-RDP86-00513R001860910010-5"

"APPROVED FOR RELEASE: 03/20/2001 CIA-RDP86-00513R001860910010-5

VORONIN, G.F.; YEVSEYEV, A.M.

Free vaporization of antimony from its alloys. Zhur. fiz. khim. 39 no. 1:172-173 Ja '65 (MIRA 19:1)

1. Moskovskiy gosudarstvennyy universitet imeni M.V. Lomonosova. Submitted December 11, 1963.

APPROVED FOR RELEASE: 03/20/2001 CIA-RDP86-00513R001860910010-5"

"APPROVED FOR RELEASE: 03/20/2001 CIA-RDP86-00513R001860910010-5

VORONIN, G.F.; YEFSEYEV, A.M.

Determination of the thermodynamic properties and molecular composition of alloy vapors by the effusion method. Part 3. Zhur.fiz.khim. 39 no.11:2760-2762 N '65. (MIRA 18:12)

1. Moskovskiy gosudarstvennyy universitet imeni M.V. Lomonosova.

APPROVED FOR RELEASE: 03/20/2001 CIA-RDP86-00513R001860910010-5"

"APPROVED FOR RELEASE: 03/20/2001 CIA-RDP86-00513R001860910010-5

VORONIN, G.F.; YEVSEYEV, A.M. (Moscow)

Determination of the thermodynamic properties and molecular composition of the vapor of binary alloys by the effusion method. Part 2: Differential method of analyzing the results of measurements in systems with wide homogeneity regions. Zhur. fiz. khim. 38 no.12:2857-2861 D '64. (MIRA 18:2)

1. Moskovskiy gosudarstvennyy universitet imeni M.V. Lomonosova.

APPROVED FOR RELEASE: 03/20/2001 CIA-RDP86-00513R001860910010-5"

"APPROVED FOR RELEASE: 03/20/2001 CIA-RDP86-00513R001860910010-5

VORONIN, G.F.; YEVSEYEV, A.M.

Determination of the thermodynamic properties and molecular composition of the vapor of binary alloys by the effusion method. Part 2. Zhur.fiz.khim. 38 no.11:2694-2697 N '64. (MIRA 18:2)

1. Moskovskiy gosudarstvennyy universitet imeni Lomonosova.

APPROVED FOR RELEASE: 03/20/2001 CIA-RDP86-00513R001860910010-5"

"APPROVED FOR RELEASE: 03/20/2001 CIA-RDP86-00513R001860910010-5

VORONIN, G.F.

Calculation of the total effective atomic collision cross-sections from the velocity distribution in a molecular beam. Zhur. fiz. khim. 38 no.10:2487-2489 O '64. (MIRA 18:2)

1. Moskovskiy gosudarstvennyy universitet imeni M.V. Lomonosova.

APPROVED FOR RELEASE: 03/20/2001 CIA-RDP86-00513R001860910010-5"

"APPROVED FOR RELEASE: 03/20/2001 CIA-RDP86-00513R001860910010-5

L 29931-66 EWP(k)/EWT(d)/EWT(m)/EWP(h)/T/EWP(1)/EWP(v)/EWP(t)/ETI JD/HM

ACC NR: AP6018011 (A) SOURCE CODE: UR/0413/66/000/010/0126/0126

INVENTOR: Voronin, G. I.; Slotin, V. I.; Zaretskiy, B. S.; Krylov, A. I.; Shvetsov, P. N.; Barannikov, G. I.; Eskin, G. I.

40
B

ORG: none

TITLE: Ultrasonic unit for fluxless brazing of metals. Class 49, No. 181967

SOURCE: Izobreteniya, promyshlennyye obraztsy, tovarnyye znaki, no. 10, 1966, 126

TOPIC TAGS: brazing, metal brazing, ultrasonic brazing, brazing unit

ABSTRACT: This Author Certificate introduces a unit for fluxless brazing of metals equipped with a heater and ultrasonic emitter. To increase efficiency, the ultrasonic

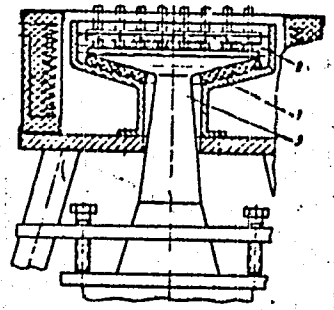

Fig. 1. Fluxless brazing unit

1 - Crucible; 2 - brazing alloy; 3 - ultrasonic emitter.

Card 1/2 UDC: 621.791.351.6.03

APPROVED FOR RELEASE: 03/20/2001 CIA-RDP86-00513R001860910010-5"

"APPROVED FOR RELEASE: 03/20/2001 CIA-RDP86-00513R001860910010-5

L 29931-66

ACC NR: AP6018011

emitter is located inside the crucible containing molten brazing alloy, forming the bottom of the latter (see Fig. 1.). Orig. art. has: 1 figure. [AZ]

SUB CODE: 11,13/SUBM DATE: 29Jan65/ ATD PRESS: 5011

Card 2/2 CC

APPROVED FOR RELEASE: 03/20/2001 CIA-RDP86-00513R001860910010-5"

"APPROVED FOR RELEASE: 03/20/2001 CIA-RDP86-00513R001860910010-5

L 5344-66

ACC NR: AP5026793 SOURCE CODE: UR/0286/65/000/017/0074/0075

INVENTOR: Voronin, G. I.; Polivoda, A. I.; Pirogov, A. A.; Chamodurov, N. Ya.; Udalova, F. A.

ORG: none

TITLE: Apparatus for dosing and dilution of liquid media. Class 42, No. 174384 [announced by Organization of the State Committee on Aviation Technology, SSSR (Organizatsiya gosudarstvennogo komitetapo aviatsionnoy tekhnike SSSR)]

SOURCE: Byulleten' izobreteniy i tovarnykh znakov, no. 17, 1965, 74-75

TOPIC TAGS: fluid density, fluid density measurement, fluid mechanics

ABSTRACT: This author certificate describes an apparatus for dosing and dilution of liquid media. It contains a slide valve distribution system actuated by two control solenoids, a preliminary dilution chamber with a piston and return spring, and a final dilution chamber with a piston controlled by a programmed reversible electric motor (see Fig. 1). In order to render the process automatic, the preliminary

Card 1/2 UDC: 681.121.12

APPROVED FOR RELEASE: 03/20/2001 CIA-RDP86-00513R001860910010-5"

"APPROVED FOR RELEASE: 03/20/2001 CIA-RDP86-00513R001860910010-5

L 5344-66

ACC NR: AP5026793

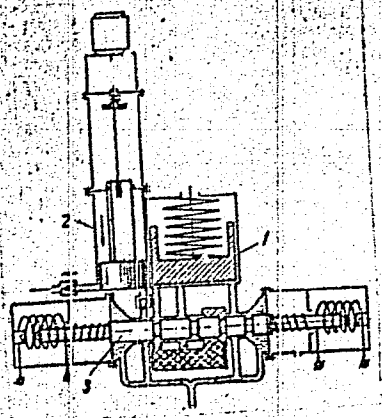

Fig. 1. Apparatus for dosing and dilution of liquid media

1 - Preliminary dilution chamber; 2 - final dilution chamber; 3 - slide valve system.

and final dilution chambers are connected by means of the slide valve which controls the process of consecutive dilution and dosing of the solution and also the washing of the system. Orig. art. has: 1 figure. [AB]

SUB CODE: ME/ SUBM DATE: 04Jul63/ ORIG REF: 000/ OTH REF: 000

ATD PRESS: 4131

md

Card 2/2

APPROVED FOR RELEASE: 03/20/2001 CIA-RDP86-00513R001860910010-5"

"APPROVED FOR RELEASE: 03/20/2001 CIA-RDP86-00513R001860910010-5

L 63571-65 EWG(v)/EWP(k)/EWT(d)/EWT(1)/EWP(k)/T-2/EWT(d)/EWP(1)/EWP(w) Pe-5/

ACCESSION NR: AP5015544 BY-4 UR/0286/65/000/008/0082/0083
621.646
629.13.01/.06

AUTHOR: Borinov, V. S.; Voronin, G. I.; Vzorov, M. I.; Perepletchikov, L. Ya.; Romanov, A. S.

TITLE: Safety valve for hermetically sealed aircraft cockpits. Class 47, No. 170256

SOURCE: Byulleten' izobretoniy i tovarnykh znakov, no. 8, 1965, 62-63

TOPIC TAGS: pressure valve, safety valve, cockpit pressurization rate control, pressurized cockpit, aircraft cockpit, pressure rate transducer

ABSTRACT: An Author Certificate has been issued for a safety valve for a hermetically sealed aircraft cockpit. The valve consists of a casing, a cover having a spray nozzle, a basic valve mounted on the rigid center of a spring-loaded diaphragm, and an excess-pressure unit. To limit the pressure-increase rate in the cockpit, the safety valve is equipped with a pressure-increase-rate transducer whose interior is divided into two cavities by a spring-loaded diaphragm with a push rod mounted on it. One of the cavities connects to the cockpit through a calibrated hole, while

Card 1

APPROVED FOR RELEASE: 03/20/2001 CIA-RDP86-00513R001860910010-5"

"APPROVED FOR RELEASE: 03/20/2001 CIA-RDP86-00513R001860910010-5

L 63571-65

ACCESSION NR: AP 015544

the other cavity, containing a contact pair, connects to the cockpit through a regulated needle valve. Closure of the contact pair is performed by the push rod when pressure on the transducer's spring-loaded diaphragm decreases to a certain point. (See Fig. 1 of Enclosure.) Orig. art. has: 1 figure. [LB]

ASSOCIATION: Organizatsiya gosudarstvennogo komiteta po aviatsionnoy tekhnike SSSR (Organization of the State Committee on Aviation Technology SSSR)

SUBMITTED: 20Aug64 ENCL: 01 SUB CODE: AC, IE

NO REF SOV: 000 OTHER: 000 ATD PRESS: 4020

Card 2/3

APPROVED FOR RELEASE: 03/20/2001 CIA-RDP86-00513R001860910010-5"

"APPROVED FOR RELEASE: 03/20/2001 CIA-RDP86-00513R001860910010-5

L 63571-65

ACCESSION NR: AP5015544

ENCLOSURE: 01

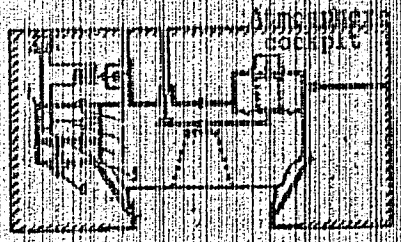

Fig. 1. Safety Valve

1 - Pressure-increase-rate transducer; 2 - spring-loaded diaphragm; 3 - push rod; 4 - calibrated hole; 5 - contact pair; 6 - regulated needle valve.

Card 3/3

APPROVED FOR RELEASE: 03/20/2001 CIA-RDP86-00513R001860910010-5"

"APPROVED FOR RELEASE: 03/20/2001 CIA-RDP86-00513R001860910010-5

L 61700-65 EWG(r)/EPF(c)/EWT(1)/EWT(m)/EWG(m)/T-2 Pz-6/Pr-4 D

ACCESSION NR: AP5017883 UR/0286/65/000/011/0165/0165

AUTHOR: Voronin, G. I.; Veresov, G. Ya.; Antokhin, G. O.; Adler, M. V.; Frenk, M. Th. 53 B

TITLE: Turbocooler. Class 46, No. 153488

SOURCE: Byulleten' izobreteniy i tovarnykh znakov, no. 11, 1965, 165

TOPIC TAGS: aircraft air conditioning, flight suit, air conditioner, turbocooler

ABSTRACT: This Author Certificate introduces a turbocooler for air-conditioning aircraft cabins and flying suits. The cooler consists of an axial compressor and a turbine mounted on the same shaft. To provide adequate lubrication in the whole range of speeds, the lubricant is supplied by means of wicks and special tubes. [AC]

ASSOCIATION: none

SUBMITTED: 25Apr62 ENCL: 00 SUB CODE: AC, PH

NO REF SOV: 000 OTHER: 000 ATD PRESS: 4017

Card 1/1

APPROVED FOR RELEASE: 03/20/2001 CIA-RDP86-00513R001860910010-5"

"APPROVED FOR RELEASE: 03/20/2001 CIA-RDP86-00513R001860910010-5

L 4004-66 EWT(d)/EWT(1)/EWT(m)/EWP(v)/EWP(k)/EWP(h)/EWP(1) UR/0286/65/000/015/0129/0129

ACCESSION NR: AP5024426

AUTHORS: Voronin, G. I.; Nikitin, Yu. F.; Kobranov, A. N.; Hamerman, M. Ye.

57
B

TITLE: A valve for a liquid or gas. Class 47, No. 173556

14

SOURCE: Byulleten' izobreteniy i tovarnykh znakov, no. 15, 1965, 129

TOPIC TAGS: valve, electromagnetic effect, electromagnetic field

ABSTRACT: This Author Certificate presents an electromagnetically operated valve for a liquid or a gas. The valve contains starting and retaining coils, switches for connecting the coils, a plunger, and a stop (see Fig. 1 on the Enclosure). To improve the efficiency and to lower the operation cost of the valve, the stop is made in the form of a sloping cylinder sealed on the side of the main plunger. This cylinder contains a movable auxiliary plunger pulled to the bottom of the stop by the increasing magnetic force after the main plunger is worn down. The auxiliary plunger is motivated by the switches. Orig. art. has: 1 figure.

ASSOCIATION: Organizatsiya gosudarstvennogo komiteta po aviatsionnoy tekhnike, SSSR (Organization of the State Committee on Aviation Technology, USSR)

UDC: 621.318.3-384

Card 1/3

APPROVED FOR RELEASE: 03/20/2001 CIA-RDP86-00513R001860910010-5"

"APPROVED FOR RELEASE: 03/20/2001 CIA-RDP86-00513R001860910010-5

L 4004-66

ACCESSION NR: AP5024426

SUBMITTED: 05Mar64 ENCL: 01 SUB CODE: IE

NO REF SOV: 000 OTHER: 000

Card 2/3

APPROVED FOR RELEASE: 03/20/2001 CIA-RDP86-00513R001860910010-5"

"APPROVED FOR RELEASE: 03/20/2001 CIA-RDP86-00513R001860910010-5

L 4004-66
ACCESSION NR: AP5024426

ENCLOSURE: 01

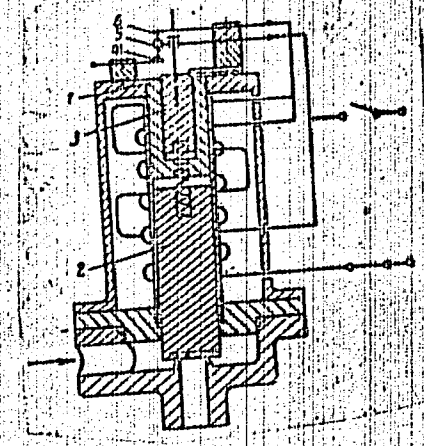

Fig. 1. 1- stop; 2- main plunger; 3- auxiliary plunger; 4—6- switches

Card 3/3

APPROVED FOR RELEASE: 03/20/2001 CIA-RDP86-00513R001860910010-5"

"APPROVED FOR RELEASE: 03/20/2001 CIA-RDP86-00513R001860910010-5

26(1,4)

PHASE I BOOK EXPLOITATION SOV/2543

Akademiya nauk SSSR. Laboratoriya dvigateley

Teoriya, konstruktsiya, raschet i ispytaniye dvigateley vnutrennego sgoraniya (Theory, Design, Calculation, and Testing of Internal Combustion Motors) Moscow, Izd-vo AN SSSR, 1958. 174 p. (Series: Its: Trudy, vyp. 4) Errata slip inserted. 3,000 copies printed.

Ed. of Publishing House: V.M. Klennikov; Tech. Ed.: T.A. Prusakova; Editorial Board: M.D. Apashev, Doctor of Technical Sciences, N.N. Zagryazkin, Candidate of Technical Sciences, Yu. B. Sviridov, Candidate of Technical Sciences, S.Z. Izrantsev, Engineer, and K.G. Yevgrafov, Engineer.

PURPOSE: This book is intended for workers of scientific research institutes, students of schools of higher education (vuzes), design bureaus, and to promote exchange of experimental information on the thermodynamics of internal combustion engines.

COVERAGE: This collection consists of 14 articles based mainly on research work done by the author in 1955-1956. Part I is devoted

Card 1/4

APPROVED FOR RELEASE: 03/20/2001 CIA-RDP86-00513R001860910010-5"

"APPROVED FOR RELEASE: 03/20/2001 CIA-RDP86-00513R001860910010-5

Sciences in cooperation with the OKB (Office of Experimental Design) of the Ministry of the Aviation Industry in 1956. Experimental models with various coefficients of the working section at changing M number in the inlet and outlet from 0.047 to 0.34 were used. The Reynolds number determined according to the velocity in the tubes was changing from 7×10^3 to 35×10^3. The following conclusions were reached: 1. Comparison of the experiments conducted with experimental data from TsAGI (Central Aeronautical and Hydrodynamics Institute) show that it is possible to reduce ζ_M only in cases of small f, (e.g., for $f=0.5$, $\zeta_M=0.05$ for profiled orifices, and $\zeta_M=0.35$ for nonprofiled orifices). For large values of f, (0:7-0·8) ζ_M cannot be appreciably reduced. Profiling practically does not reduce resistance in heat exhangers with tubes of 4 mm diameter, 0·08-0·1-mm thickness, and 0·-0·5-mm intervals. 2. The application of the method of smallest squares to the calculation of losses in banks of pipes at various values of the flow of air makes the exact evaluation of local resistances in heat exchangers possible. It was determined for instance that for Re = 9×10^3 to 27×10^3 and for $f = 0.495$ in all three cases considered, the value of ζ increases two times. Experimental work was done by the authors with the assistance of A.A. Alekseyev and

APPROVED FOR RELEASE: 03/20/2001 CIA-RDP86-00513R001860910010-5"

"APPROVED FOR RELEASE: 03/20/2001 CIA-RDP86-00513R001860910010-5

PHASE I BOOK EXPLOITATION 1014

Voronin, Grigoriy Ivanovich, Doctor of Technical Sciences, Professor

Osnovy termodinamiki i teploperedachi (Principles of Thermodynamics and Heat Transfer) Moscow, Oborongiz, 1958. 342 p. 15,000 copies printed.

Reviewers: Vukalovich, M. P., Doctor of Technical Sciences, Professor, Petukhov, B. S., Doctor of Technical Sciences, Professor, Zubarev, V. N., Candidate of Technical Sciences, Docent, Isachenko, V. P., Candidate of Technical Sciences, Docent; Ed.: Rasskazov, D. S., Engineer; Ed. of Publishing House: Petrova, I. A.; Tech. Ed.: Pukhlikova, N. A.; Managing Ed.: Sokolov, A. I., Engineer.

PURPOSE: This book is intended as a textbook for aviation technical schools for courses in thermodynamics and heat transfer. It may also be useful as a manual for specialists already working in the field of thermodynamics.

Card [redacted]

APPROVED FOR RELEASE: 03/20/2001 CIA-RDP86-00513R001860910010-5"

"APPROVED FOR RELEASE: 03/20/2001 CIA-RDP86-00513R001860910010-5

L 57873-65 EWG(m)/EWT(1)/EWT(m)/EWG(m)/T-2 Pz-6 UR/0286/65/000/010/0035/0035
ACCESSION NR: AP5016720 621.572/576:621.13.01/06

AUTHOR: Voronin, G. I.; Slotin, V. I.; Bragin, A. N.; Popova, A. T.; Zhorin, M. Ye.; Feklisov, M. A.

TITLE: Turbocooler. Class 17, No. 171006

SOURCE: Byulleten' izobreteniy i tovarnykh znakov, no. 10, 1965, 35

TOPIC TAGS: aircraft air conditioning, air conditioning, aircraft cabin

ABSTRACT: This Author Certificate introduces a turbocooler (see Fig. 1 of the Enclosure) for air-conditioning airtight compartments in an aircraft. The turbine and fan rotors are joined to each other along their outer diameters and rotate on a gas-lubricated bearing. In order to increase the efficiency of the turbocooler at high speeds, the stationary shaft is hollow and has a thrust plate serving simultaneously for the turbine and fan rotors as a thrust bearing to which a lubricating gas is supplied from the turbine inlet nozzle through the hollow shaft. Orig. art. has: 1 figure. [AC]

Card 1/3

APPROVED FOR RELEASE: 03/20/2001 CIA-RDP86-00513R001860910010-5"

"APPROVED FOR RELEASE: 03/20/2001 CIA-RDP86-00513R001860910010-5

L 57873-65

ACCESSION NR: AP5016720

ASSOCIATION: Organizatsiya gosudarstvennogo komiteta po aviatsionnoy tekhnike SSSR (Organization of the State Committee on Aviation Engineering, SSSR)

SUB CODE: AC, AE

SUBMITTED: 27Mar64

ENCL: 01

ATD PRESS: 4033

OTHER: 000

NO REF SOV: 000

Card 2/3

APPROVED FOR RELEASE: 03/20/2001 CIA-RDP86-00513R001860910010-5"

"APPROVED FOR RELEASE: 03/20/2001 CIA-RDP86-00513R001860910010-5

L 57879-66
ACCESSION NR: AP5016720

ENCLOSURE: 01

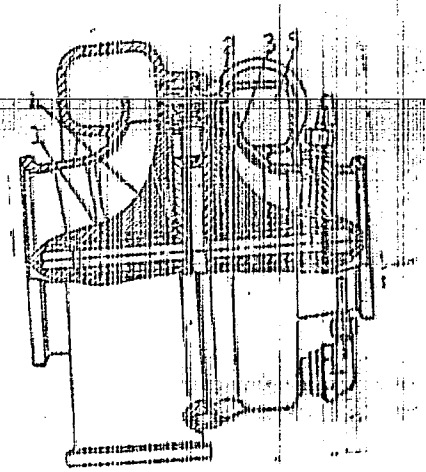

Fig. 1. Turbocoupler

1 - Stationary shaft; 2 - thrust plate; 3 - turbine wheel; 4 - fan wheel; 5 - inlet duct

Card 3/3

APPROVED FOR RELEASE: 03/20/2001 CIA-RDP86-00513R001860910010-5"

"APPROVED FOR RELEASE: 03/20/2001 CIA-RDP86-00513R001860910010-5

AUTHOR: Voronin, [illegible] sealed aircraft cockpit. Class 62,

168131

SOURCE: Byulleten' izobreteniy i tovarnykh znakov, no. 3, 1961, 91

TOPIC TAGS: cockpit, pressurized cabin, pressure regulator

ABSTRACT: This Author's Certificate [illegible] method for pressurizing a hermetically sealed aircraft cockpit. The pressurization [illegible] pipe [illegible] ess is made more reliable by using a pipeline to connect the [illegible] pressure branch of the cabin's safety valve to the "valve" pipe [illegible] regulator which is adjusted to the desired degree of pressurization.

ASSOCIATION: none

SUBMITTED: 02 un64

ENCL: 01

OTHER: 000

SUB CODE: AC

APPROVED FOR RELEASE: 03/20/2001 CIA-RDP86-00513R001860910010-5"

"APPROVED FOR RELEASE: 03/20/2001 CIA-RDP86-00513R001860910010-5

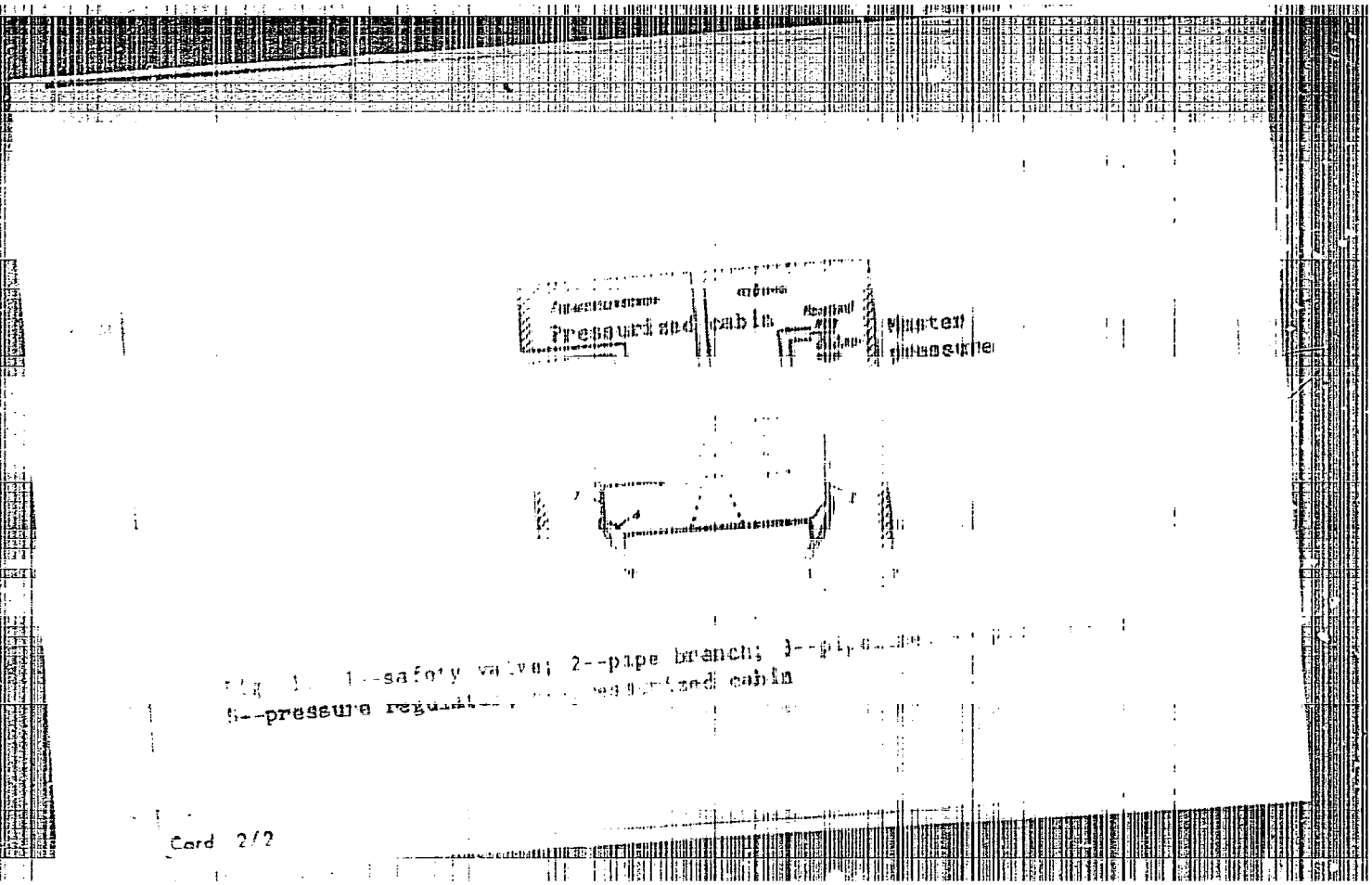

APPROVED FOR RELEASE: 03/20/2001 CIA-RDP86-00513R001860910010-5"

"APPROVED FOR RELEASE: 03/20/2001 CIA-RDP86-00513R001860910010-5

[illegible] SWG(v)/SWT(1)/SWT(m)/T-2 Pe-5 [illegible]

ACCESSION NR: [illegible]

AUTHOR: Voronin, G. I.; Avdonin, [illegible]; Sergeyev, [illegible]; [illegible]; Volgin, V. A.; Fokor [illegible]

TITLE: Device restricting the pressure variation rate. Class 47, No. [illegible]

SOURCE: Byulleten' izobreteniy [illegible]

TOPIC TAGS: aircraft pressurized cabin, automatic pressure control, pressure control

ABSTRACT: An Author Certificate has been issued for a device restricting the [illegible] aircraft cabins. The device includes a [illegible] the pressure rise [illegible] has been equipped [illegible] the intake channel [illegible]

APPROVED FOR RELEASE: 03/20/2001 CIA-RDP86-00513R001860910010-5"

"APPROVED FOR RELEASE: 03/20/2001 CIA-RDP86-00513R001860910010-5

L 32269-65

ACCESSION NR: AP5001485

SUBMITTED: 26Apr63 ENCL: 00 SUB CODE: AC

NO REF SOV: 000 OTHER: 000 ATD PRESS: 3204

APPROVED FOR RELEASE: 03/20/2001 CIA-RDP86-00513R001860910010-5"

"APPROVED FOR RELEASE: 03/20/2001 CIA-RDP86-00513R001860910010-5

L 31975-[illegible]

ACCESSION NR: AP5007511 [illegible]

AUTHOR: Voronin, G. I., [illegible], Antokhin, G. [illegible], Adler, [illegible] V.; Frenk, M. Ts.

37
B

TITLE: Turbocooler. Class 46, No. 153488

SOURCE: Byulleten' izobreteniy i tovarnykh znakov, no. [illegible], 196[illegible], 120

TOPIC TAGS: aircraft cooling, aircraft air conditioning, turbocooler, flying suit

ABSTRACT: An Author Certificate has been issued for a turbocooler for air conditioning aircraft cabins and flying suits. The weight of the turbocooler is reduced by the use of a mixed-flow compressor mounted on the turbine shaft. In a variant, the shaft is provided with grooves for securing adequate lubrication under all operating regimes. [AC]

ASSOCIATION: none

SUB CODE: AC, PH

SUBMITTED: 25Apr62

ENCL: 00

ATD PRESS: 3201

NO REF SOV: 000

OTHER: 000

Card 1/1

APPROVED FOR RELEASE: 03/20/2001 CIA-RDP86-00513R001860910010-5"

"APPROVED FOR RELEASE: 03/20/2001 CIA-RDP86-00513R001860910010-5

L 35560-56 EWG(j)/EWT(m)/EPF(c)/EPR/EWP(t)/EWP(b) Pr-4/Ps-4 IJP(c)/EPF
S/0286/65/000/005/0032/0032

ACCESSION NR: AP5008154 JD/WW/JW

AUTHORS: Voronin, G. I.; Zolotukhin, M. V.; Anosov, V. I.; Krinin, V. S.; Serebrennikov, V. N.

TITLE: An oxygen gasifier for prolonged maintenance of liquid oxygen under pressure. Class 17, No. 168735

SOURCE: Byulleten' izobreteniy i tovarnykh znakov, no. 5, 1965, 32

TOPIC TAGS: liquid oxygen, pressure regulator, heat transfer

ABSTRACT: This Author Certificate presents an oxygen gasifier for prolonged preservation of liquid oxygen under pressure. It consists of a thick-walled vessel with thermal insulation and systems for gasification and for pressure regulation. To avoid overheating the liquid oxygen at the walls of the vessel and to bring about premature evaporation, thermal bridges with low thermal resistance are placed in the inner cavity (see Fig. 1 on the Enclosure). Orig. art. has: 1 figure.

ASSOCIATION: none
SUBMITTED: 18May63
NO REF SOV: 000
ENCL: 01
OTHER: 000
SUB CODE: 10,FP,TD

Card 1/1

APPROVED FOR RELEASE: 03/20/2001 CIA-RDP86-00513R001860910010-5"

"APPROVED FOR RELEASE: 03/20/2001 CIA-RDP86-00513R001860910010-5

L 09268-67 EWT(m) FDM/AM/JN (A, N) SOURCE CODE: UR/0413/66/000/015/0033/0033

ACC NR: AP6029876 27

INVENTORS: Voronin, G. I.; Arkharov, A. M.; Lomakina, O. A.; Syrovets, K. N.

ORG: none

TITLE: A low-pressure apparatus for obtaining liquid oxygen from the air. Class 17, No. 184274

SOURCE: Izobret prom obraz tov zn, no. 15, 1966, 33

TOPIC TAGS: oxygen, liquid oxygen, gas liquefier, liquefaction technique

ABSTRACT: This Author Certificate presents a low-pressure apparatus for obtaining liquid oxygen from the air by low temperature rectification (see Fig. 1). The apparatus consists of an air compressor and of heat exchangers placed consecutively behind the compressor and serving for cleaning and cooling the compressed air; a rectifier with an evaporator for dividing the air into its components, and an external cooler. To increase the efficiency and to lower the cost of the apparatus, the external cooler is placed in front of the rectifier in the stream of the air being

UDC: 621.593.05:661.93

Card 1/2

APPROVED FOR RELEASE: 03/20/2001 CIA-RDP86-00513R001860910010-5"

"APPROVED FOR RELEASE: 03/20/2001 CIA-RDP86-00513R001860910010-5

L 09268-67

ACC NR: AP6029876

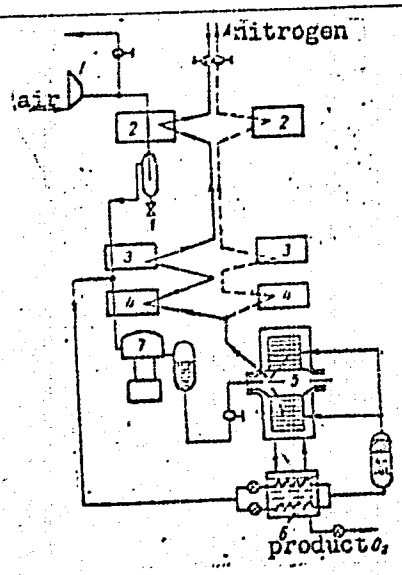

Fig. 1. 1 - compressor; 2 - heat exchanger-liquefier; 3 - preliminary heat exchanger; 4 - main heat exchanger; 5 - rectifier; 6 - evaporator; 7 - external cooler

processed. Orig. art. has: 1 figure.

SUB CODE: 07/13/ SUBM DATE: 20Nov64/

APPROVED FOR RELEASE: 03/20/2001 CIA-RDP86-00513R001860910010-5"

"APPROVED FOR RELEASE: 03/20/2001 CIA-RDP86-00513R001860910010-5

L 07861-67 EWT(m) DJ SOURCE CODE: UR/0413/66/000/006/0108/0108

ACC NR: AP6011264

AUTHORS: Voronin, G. I.; Slotin, V. I.; Bragin, A. N.; Popova, A. T.; Zaorin, M. Ye.

31
B

ORG: none

TITLE: A gasostatic bearing of high rotary velocity. Class 47, No. 180021

SOURCE: Izobreteniya, promyshlennyye obraztsy, tovarnyye znaki, no. 6, 1966, 108

TOPIC TAGS: gas bearing, bearing stability, vibration damping

ABSTRACT: This Author Certificate presents a gasostatic bearing of high rotary velocity. The bearing contains gas ducts located in two rows at the circumference. To lead away the dirt from the stagnant zone of the working space in the bearing and to increase the resistance of the shaft to vibrations, the internal surface of the bearing contains an axial duct connected by a radial hole to the surface of the bearing (see Fig. 1). The polarly opposite side carries another axial hole connecting both rows of the ducts.

UDC: 621.822.5

Card 1/2

APPROVED FOR RELEASE: 03/20/2001 CIA-RDP86-00513R001860910010-5"

"APPROVED FOR RELEASE: 03/20/2001 CIA-RDP86-00513R001860910010-5

L 07861-67

ACC NR: AP6011264

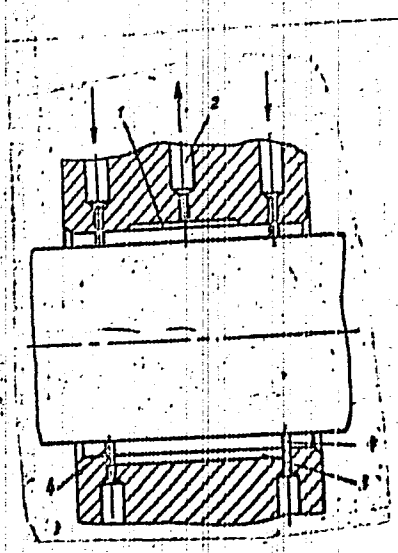

Fig. 1. 1 - axial duct; 2 - radial hole; 3 - axial duct; 4 - ring grooves

Orig. art. has: 1 figure.

SUB CODE: 13/ SUBM DATE: 21Mar64

Card 2/2 bc

APPROVED FOR RELEASE: 03/20/2001 CIA-RDP86-00513R001860910010-5"

"APPROVED FOR RELEASE: 03/20/2001 CIA-RDP86-00513R001860910010-5

L 08386-67 EWT(1) AT

ACC NR: AP6033466 SOURCE CODE: UR/0413/66/000/018/0046/0046

INVENTOR: Anokhin, L. A.; Voronin, G. I.; Gil'zin, K. A.; Levin, Ye. M.

ORG: none

34
B

TITLE: Microcooler. Class 17, No. 185940

SOURCE: Izobreteniya, promyshlennyye obraztsy, tovarnyye znaki, no. 18, 1966, 46

TOPIC TAGS: solenoid, cooling, microcooler

ABSTRACT: A low-temperature microcooler, operating on the reverse Sterling cycle, is described (Fig. 1). It is characterized by a common housing which contains a cylinder, with a coaxially situated compressor and expander pistons, a cooler, a generator, and a drive mechanism. For the purpose of reducing the size of the cooler and to provide dynamic equilibrium, the two annular solenoid coils, whose armature is rigidly connected to the pistons, and the damping gas chambers for the reverse action pistons, are contained in the housing. Another model of the same microcooler has its electric motors, having a common stator and rotors (the latter attached to the piston rods), situated in the microcooler

Card 1/2 UDC: 621.574-242-837

APPROVED FOR RELEASE: 03/20/2001 CIA-RDP86-00513R001860910010-5"

"APPROVED FOR RELEASE: 03/20/2001 CIA-RDP86-00513R001860910010-5

L 08386-67
ACC NR: AP6033466

housing, in order to decrease losses incurred from friction between the cylinder and the rotating pistons. [Translation]

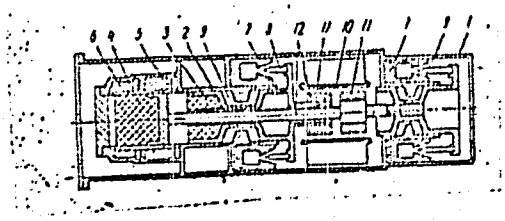

Fig. 1. Microcooler
1—Housing; 2—cylinder; 3—compressor piston; 4—expander piston; 5—cooler; 6—regenerator; 7—solenoid coils; 8—armature; 9—damping gas chambers; 10—electric motor stator; 11—electric motor armature; 12—piston rods

SUB CODE: 21/ SUBM DATE: 28Jul65/

Card 2/2

APPROVED FOR RELEASE: 03/20/2001 CIA-RDP86-00513R001860910010-5"

"APPROVED FOR RELEASE: 03/20/2001 CIA-RDP86-00513R001860910010-5

POPKOV, Vasiliy Ivanovich, kand.tekhn.nauk; SERGIYEV, Vladimir Poliyenovich; VORONIN, G.M., retsenzent; NIKITIN, V.M., retsenzent; GABOV, D.M., red.; LNAKNIN, M.T., tekhn.red.

[Work organization at garment factories] Organizatsiia proizvodstva na shveinom predpriiatii. Izd.2., perer. i dop. Moskva, Izd-vo nauchno-tekhn.lit-ry, 1960. 202 p. (MIRA 14:6)

(Clothing industry)

APPROVED FOR RELEASE: 03/20/2001 CIA-RDP86-00513R001860910010-5"

"APPROVED FOR RELEASE: 03/20/2001 CIA-RDP86-00513R001860910010-5

FEDENYUK, Vasiliy Gavrilovich, kand.tekhn.nauk; SAVOSTITSKIY, A.V., retsenzent; VORONIN, G.M., retsenzent; GABOVA, D.M., red.; KHAKHIN, M.T., tekhn.red.

[Methods for making glued seams in assembling clothing sections] Metody kleevogo soedineniia detalei shveinykh izdelii. Izd.2., perer. i dop. Moskva, Gos.nauchno-tekhn. izd-vo lit-ry po legkoi promyshl., 1959. 146 p. (MIRA 13:5)

(Clothing industry) (Glue)

APPROVED FOR RELEASE: 03/20/2001 CIA-RDP86-00513R001860910010-5"

"APPROVED FOR RELEASE: 03/20/2001 CIA-RDP86-00513R001860910010-5

FEDENYUK, V.G., kandidat tekhnicheskikh nauk; SAVOSTITSKIY, A.V., retsenzent; VORONIN, G.M., retsenzent; SEGAL', N.M., redaktor; DMITRIYEVA, N.I., tekhnicheskiy redaktor

[Methods of gluing parts of sewn goods] Metody kleevogo soedineniia detalei shveinykh izdelii. Moskva, Gos. nauchno-tekhn. izd-vo Ministerstva legkoi promyshl. SSSR, 1956. 89 p. (MIRA 9:11)
(Glue) (Clothing industry)

APPROVED FOR RELEASE: 03/20/2001 CIA-RDP86-00513R001860910010-5"

"APPROVED FOR RELEASE: 03/20/2001 CIA-RDP86-00513R001860910010-5

RUSAKAV, Sergey Ivanovich; TRUKHAN, Gennadiy Lukich; EPPEL', Sergey Sergeyevich; POPKOV, Vasiliy Ivanovich; VORONIN, G.M., inzh., retsenzent; KARASEV, V.K., dots., retsenzent; ANTIPOVA, M.I., prepod., retsenzent; SHANG'GINA, V.F., kand. tekhn. nauk, retsenzent; MINAYEVA, T.M., red.; SHAPENKOV, T.A., tekhn. red.

[Technology of clothing manufacture] Tekhnologiia shveinogo proizvodstva. Izd.2., perer. i dop. Moskva, Gos. izd-vo "Rostekhizdat, 1961. 670 p. (MIRA 15:2)
(Clothing industry)

APPROVED FOR RELEASE: 03/20/2001 CIA-RDP86-00513R001860910010-5"

"APPROVED FOR RELEASE: 03/20/2001 CIA-RDP86-00513R001860910010-5

VORONIN, G.N.

Development of pacinian corpuscles in regeneration of bone tissue. Doklady Akad.nauk SSSR 76 no.6:885-887 21 Feb 51. (CIML 20:6)

1. Presented by Academician N.N. Anichkov 23 December 1950.

APPROVED FOR RELEASE: 03/20/2001 CIA-RDP86-00513R001860910010-5"

"APPROVED FOR RELEASE: 03/20/2001 CIA-RDP86-00513R001860910010-5

VORONIN, G.N.

Characteristics of the regeneration of tendon tissues. Arkh. anat. gist. i embr. 31 no.2:18-23 Ap-Je '54. (MLRA 7:8)

1. Iz laboratorii tsitologii (zav. prof. V.P.Mikhaylov) otdela gistologii (zav. deystvitel'nyy chlen AMN SSSR prof. G.N.Khlopin) Instituta eksperimental'noi meditsyny AMN SSSR.

(REGENERATION,
*tendons)
(MUSCLES, physiology,
*tendon regen.)

APPROVED FOR RELEASE: 03/20/2001 CIA-RDP86-00513R001860910010-5"

"APPROVED FOR RELEASE: 03/20/2001 CIA-RDP86-00513R001860910010-5

VORONIN, G.N.; MIKHAYLOV, V.P.

Characteristics of structures formed from the blood plasma during its culture. Dokl.AN SSSR 96 no.3:629-631 My '54. (MIRA 7:6)

1. Institut eksperimental'noy meditsiny Akademii meditsinskikh nauk SSSR. Predstavleno akademikom N.N.Anichkovym.
(PLASMA,
*structures formed during culture of plasma)

APPROVED FOR RELEASE: 03/20/2001 CIA-RDP86-00513R001860910010-5"

"APPROVED FOR RELEASE: 03/20/2001 CIA-RDP86-00513R001860910010-5

USSR/Human and Animal Morphology (Normal and Pathological) S-2

Abs Jour : Ref Zhur - Biol., No 12, 1958, No 55044

Author : Mikheylov, V.F., ~~Voronin, G.N.,~~ Cheredeyeve, Ye.A.
Inst : Academy of Medical Sciences USSR, Institute of Experimental Medicine.

Title : Investigations of Some of the Gastro-Intestinal Tract Sections in White Rats in Experimental Neurotic States.

Orig Pub : Yezhegodnik. In-t eksperim. med. Akad. med. nauk SSSR, 1955, L., 1956, 386-390

Abstract : Morphological changes of any kind were not discovered in the intestinal tracts of white rats when inhibited or irritated states existed, except for some insignificant displacement within the mitotic regimen of the colon's epithelial cells.

Card : 1/1

APPROVED FOR RELEASE: 03/20/2001 CIA-RDP86-00513R001860910010-5"

"APPROVED FOR RELEASE: 03/20/2001 CIA-RDP86-00513R001860910010-5

VORONIN, G.N.

2-3

USSR/Human and Animal Morphology - Digestive System

Abs Jour : Referat Zhur - Biologii, No 16, 1957, 70336

Author : Voronin, G.N.
Title : The Secretory Role of the Epithelium of the Pancreas Excretory

Orig Pub : Dokl. AN SSSR, 1956, 109, No 4, 862-864

Abstract : 69 rats were studied from birth to 12 months of age. Main excretory ducts of the first order and their main branches- ducts of the second order, are lined by high prismatic epithelium, and the smaller ones - first by cubic and then flat. In the epithelium of the ducts of I and II order and in their crypts we find : 1) epethelial cells, having large oval nuclei with evenly distributed small granules of chromatin and small-celled cytoplasm. 2) goblet-cells found singly or in groups or 3-6 cells, more frequently in new-born, rarer in adult; the content of these cells can be dyed by mucicarmine-red;

- 63 -

Card 1/3

Inst. Exptl. Med., Acad Med Sci USSR

APPROVED FOR RELEASE: 03/20/2001 CIA-RDP86-00513R001860910010-5"