"APPROVED FOR RELEASE: 03/20/2001 CIA-RDP86-00513R001860920007-8

VORONKOV, N.I.; GITMAN, F.M.; SHILO, A.Ye.; GVAY, P.I., dotsent, otv. za vypusk

[Experimental and theoretical study of two-layer panels for roofs with prestressed reinforcement] Experimental'no-teoreticheskoe issledovanie dvukhslo[illegible]inykh panelei dlia perektytiia s predvaritel'no-napriazhennoi armatu[illegible]. Dnepropetrovsk. Inzhenerno-stroitel'nyi institut. Nauchnoe soobshchenie, no.45). (MIRA 16:8)
(Reinforced concrete construction)

APPROVED FOR RELEASE: 03/20/2001 CIA-RDP86-00513R001860920007-8"

"APPROVED FOR RELEASE: 03/20/2001 CIA-RDP86-00513R001860920007-8

AFANASENKO, B.I.; BARTASHEVSKIY, Ye.L.; KOLOMOYTSEV, F.I.; VORONKOV, N.I., dotsent, otv. za vypusk

[Using a water wave nucleus to measure the dielectric characteristics of liquids] Izmerenie dielektricheskikh kharakteristik malopoternykh zhidkostei s pomoshch'iu volnovodnoi iacheiki. Dnepropetrovsk, 1960. 8 p. (Dnepropetrovsk. Inzhenerno-stroitel'nyi institut. Nauchnoe soobshchenie, no.60). (MIRA 16:8)

1. Zamestitel' direktora Dnepropetrovskogo inzhenerno-stroitel'nogo instituta po nauchnoy rabote (for Voronkov).
(Liquids--Electric properties)

APPROVED FOR RELEASE: 03/20/2001 CIA-RDP86-00513R001860920007-8"

"APPROVED FOR RELEASE: 03/20/2001 CIA-RDP86-00513R001860920007-8

RONNE, G.G.; GAYDAMAKIN, V.S.; VORONKOV, N.P.; GELLER, D.Yu.; BUYNITSKIY, V.V.

Conversion to automatic control of vulcanization processes. Prom. energ. 17 no.12:4 D '62. (MIRA 17:4)

APPROVED FOR RELEASE: 03/20/2001 CIA-RDP86-00513R001860920007-8"

"APPROVED FOR RELEASE: 03/20/2001 CIA-RDP86-00513R001860920007-8

VORONKOV, N.V.

25

Dyeing fulled goods. V. V. Kovichnikov and N. V. Voronkov. Russ. appl. 41,182, Feb. 22, 1929. Fulled goods are steamed, known dye solns. are added by the usual methods and the goods are again steamed.

ASM-SLA METALLURGICAL LITERATURE CLASSIFICATION

APPROVED FOR RELEASE: 03/20/2001 CIA-RDP86-00513R001860920007-8"

"APPROVED FOR RELEASE: 03/20/2001 CIA-RDP86-00513R001860920007-8

VORONKOV, Nikolai Vasil'evich, 1880-1920

Fresh-water fauna; a guide for excursionists Izd. 2. Moskva Gos. izd-vo, 1922. 91 p.
(43-37237)

QH96.V6 1922

APPROVED FOR RELEASE: 03/20/2001 CIA-RDP86-00513R001860920007-8"

"APPROVED FOR RELEASE: 03/20/2001 CIA-RDP86-00513R001860920007-8

VORONKOV, O.K.

Methods and results of the study of low depths using the refraction correlation method under the conditions of permafrost. Geol. i geofiz. no.4:114-124 '65. (MIRA 18:8)

1. Vsesoyuznyy ordena Lenina nauchno-issledovatel'skiy i proyektno-izyskatel'skiy institut im. Z.Ya. Zhuka, Leningradskoye otdeleniye.

APPROVED FOR RELEASE: 03/20/2001 CIA-RDP86-00513R001860920007-8"

"APPROVED FOR RELEASE: 03/20/2001 CIA-RDP86-00513R001860920007-8

VORONKOV, O. I. Doc Med Sci -- (diss) " Experimental study of epidemic Botkin's hepatitis." Mos, 1957. 18 pp 20 cm. (Min of Health USSR. Central Inst for the Advanced Training of Physicians), 100 copies

(KL, 7-57, 108)

58

APPROVED FOR RELEASE: 03/20/2001 CIA-RDP86-00513R001860920007-8"

"APPROVED FOR RELEASE: 03/20/2001 CIA-RDP86-00513R001860920007-8

SHAN'GIN, N.V.; VORONKOV, O.K.; YUDBOROVSKIY, I.Kh.

Change in the elasticity modulus of rocks with depth and their relation to geological factors. Uch.zap.LGU no.303:146-157 '62. (MIRA 15:11)

(Rocks—Testing) (Seismic prospecting)

APPROVED FOR RELEASE: 03/20/2001 CIA-RDP86-00513R001860920007-8"

"APPROVED FOR RELEASE: 03/20/2001 CIA-RDP86-00513R001860920007-8

VORONKOV, P.

BARER, G.; VORONKOV, P.

Short system of two-grade wheat milling. Muk.-elev.prom. 21 no.3: 11-14 Mr '55. (MLRA 8:5)

1. Odesskiy tekhnologicheskiy institut imeni I.V.Stalina.
(Wheat milling)

APPROVED FOR RELEASE: 03/20/2001 CIA-RDP86-00513R001860920007-8"

"APPROVED FOR RELEASE: 03/20/2001 CIA-RDP86-00513R001860920007-8

VORONKOV, P.

New form of economic service in enterprises. Vop. ekon. no.2: 30-36 F '63. (MIRA 16:3)

1. Glavnyy ekonomist Ural'skogo zavoda tyazhelogo mashinostroyeniya imeni Sergo Ordzhonikidze.
(Sverdlovsk--Machinery industry--Management)

APPROVED FOR RELEASE: 03/20/2001 CIA-RDP86-00513R001860920007-8"

"APPROVED FOR RELEASE: 03/20/2001 CIA-RDP86-00513R001860920007-8

VORONKOV, P. I.

BARER, G.O.; BELETSKIY, V.Ya.; VORONKOV, P.I.; DEMIDOV, P.G.; DZYADZIO, A.M.; DOMBROVSKIY, G.D.; ZOLOTAREV, S.M.; KRAVCHENKO, I.K.; PLATONOV, P.N.; PA[illegible]NKO, A.V.; UGOLIK, N.F.

V. IA. Girshson. Muk.-elev. prom. 23 no.4:23 Ap '57. (MLRA 10:5)
(Girshson, Vasilii IAkovlevich, 1880-1957)

APPROVED FOR RELEASE: 03/20/2001 CIA-RDP86-00513R001860920007-8"

"APPROVED FOR RELEASE: 03/20/2001 CIA-RDP86-00513R001860920007-8

CA

Change of the content of oxygen in water samples under different conditions of storage. O. A. Alekin and P. P. Voronkov. *Voprosy Gidrokhim. (Gosudarst. Gidrol. Inst.)* 1946, No. 32, 98-116.—A study of the effect of different conditions of storage of water samples on their O content. The chief problems involved were those of what preservatives to use and whether to store samples under acid or alk. conditions. For the exptl. work water samples were taken from the surface of the Neva River. Expts. were made to det.: (1) final quantity of O after storage of the samples in ordinary flasks and in hermetically sealed flasks; (2) change in O content in samples of distd. water kept in the air and beneath water; (3) losses of O in samples of distd. water stored at increased temps., in comparison with the temps. *in situ*; (4) change of O content in Neva River water samples during storage in unpreserved and preserved condition at *in situ* temps. and at 18-20°; (5) influence of preservatives on microorganisms; (6) activity of $HgCl_2$ soln. as a preservative; and (7) change in O during storage of sample in acid and alk. media. The O contents were detd. by the Winkler method. The preservatives tried were xylene, chloroform, and $HgCl_2$. It was concluded that the best of these was $HgCl_2$. It was also stated that the loss of unfixed O from water samples occurs because of escape of O to the atm. and biol. consumption of O by microorganisms. Losses of O to the atm. occurred only when the samples were stored at temps. higher than the temps. at which they were taken. It was learned that samples should be stored under alk. conditions if the O content is to be detd. by the Winkler method. Tables of data obtained from these expts. are included.

Gladys S. Macy

APPROVED FOR RELEASE: 03/20/2001 CIA-RDP86-00513R001860920007-8"

"APPROVED FOR RELEASE: 03/20/2001 CIA-RDP86-00513R001860920007-8

VORONKOV, P. P.

Voronkov, P. P., Bralov, N. S. and Chernovskaya, Ye. N. - "The basic pattern of the hydrochemical regime of the coastal area of the Barents Sea in the region of Central Murman," Trudy Murman. biol. stantsii, Vol. I, 1948, p. 39-101-Bibliog: 10 items

SO: U-3600, 10 July 53, (Letopis 'Zhurnal 'nykh Statey, No.6, 1949).

APPROVED FOR RELEASE: 03/20/2001 CIA-RDP86-00513R001860920007-8"

"APPROVED FOR RELEASE: 03/20/2001 CIA-RDP86-00513R001860920007-8

USSR/Geophysics - Ionic Flow, Afforestation 1 Dec 51

"The Influence of the Afforestation of Watersheds on the Magnitude of Ionic Flow," P. P. Voronkov, O. K. Sokolova, State Hydrol Inst, Leningrad

"Dok Ak Nauk SSSR" Vol LXXXI, No 4, pp 561-564

Natural waters flowing on Earth's surface contain mineral and organic matter whose deg of disintegration differ greatly. Coarsest particles are found in suspended state, and finest - in true solns - are in ionic mol state. Intermediate positions are assumed by inorganic

202T65

USSR/Geophysics - Ionic Flow, Afforestation (Contd) 1 Dec 51

and organic substances dissolved in water, in colloidal state. Authors investigated monthly and yearly quantity of flow ($m^3 \cdot 10^3/km^2$), ionic flow (t/km^2) for taiga (forest) and cultivated land, and relation between particle type, erosion, etc. Submitted by Acad D. S. Belyankin 28 Sep 51.

202T65

VORONKOV, P. P.

APPROVED FOR RELEASE: 03/20/2001 CIA-RDP86-00513R001860920007-8"

"APPROVED FOR RELEASE: 03/20/2001 CIA-RDP86-00513R001860920007-8

VORONKOV, P.P., kandidat geograficheskikh nauk

Tasks of the hydrometeorological service in the field of hydrochemical work in connection with the Stalin plan for the transformation of nature. Meteor.i gidrol. no.2:3-7 F '53. (MIRA 8:9)

(Water resources development)

APPROVED FOR RELEASE: 03/20/2001 CIA-RDP86-00513R001860920007-8"

"APPROVED FOR RELEASE: 03/20/2001 CIA-RDP86-00513R001860920007-8

VOLKOVA, E. F.

"Hydrometeorological and Hydrochemical Conditions Governing the Occurrence of Phenomena of 'Dying' (zamor) of Fish in the Region of the Central Volga," Meteorol. i Gidrologiya, No 3, 1953, pp 49-51

Without denying the great influence of the discharge of industrial and domestic waste waters into the Volga and its wintertime oxygen regime, the author arrives at the conclusion that the sharp deficiency of oxygen in river waters, which was the cause of the so-called dying phenomenon in 1938-1942 uncharacteristic of the Central Volga, is a result of the extreme tendencies toward drying up under the hydrometeorological conditions prevailing for the Oka and Kama river basins during the winter and autumn months. The periods of dying winters was concluded not as a result of changes in the indicated conditions. The so-called dying winter (zamornyye zimy) can be forecasted in accordance with the degree and duration of the deviations of the hydrometeorological conditions from the normal for the Oka and Kama Basins. (RZhGeol, No 6, 1955) SO: Sum.No. 713, 9 Nov 55

Leningrad State Hydrological Inst.

APPROVED FOR RELEASE: 03/20/2001 CIA-RDP86-00513R001860920007-8"

"APPROVED FOR RELEASE: 03/20/2001 CIA-RDP86-00513R001860920007-8

VORONKOV, P.P.

Basic features in the formation of the behavior of the ionic composition of surface water in the steppe and forest steppe in spring. Trudy GGI no.37:4-33 '53. (MIRA 11:6)
(Water)

APPROVED FOR RELEASE: 03/20/2001 CIA-RDP86-00513R001860920007-8"

"APPROVED FOR RELEASE: 03/20/2001 CIA-RDP86-00513R001860920007-8

VORONKOV, P.P.

General features of the behavior of dissolved oxygen and the photosynthesis process in reservoirs of the Volga system. Trudy GGI no.37:34-61 '53. (MIRA 11:6)
(Volga Valley--Reservoirs) (Oxygen)
(Photosynthesis)

APPROVED FOR RELEASE: 03/20/2001 CIA-RDP86-00513R001860920007-8"

"APPROVED FOR RELEASE: 03/20/2001 CIA-RDP86-00513R001860920007-8

VORONKOV, P. P.

Basic features of biogenous compounds in the reservoirs of the Volga system, in connection with their primary production. P. P. Voronkov. *Trudy Gosudarst. Gidrolog. Inst.* 1953, No. 37, 62-80; *Referat. Zhur., Khim.* 1953, No. 8376.—In order to establish the potential productiveness of the Kuibyshev and Stalingrad reservoirs, a study was made of the biogenous compds. of the Lower Volga and the Rybinsk reservoir. The water of the Volga in the region of Astrakhan contained (Bruevich, *C.A.* 45, 9936a) 0.020–0.040 mg. phosphates/l. in the summer and 0.060–0.070 in the flood period; in the summer it contained 0.015–0.030 mg. nitrates/l., in winter 0.010 mg. In the Rybinsk reservoir there were 0.100 mg. phosphates/l. in autumn, in winter 0.030, in the flood period 0.150, and in summer 0.015 mg.; the content of nitrates in the autumn-winter period was > 0.100 mg. N/l.; during the spring floods their amt. decreased, and in June reached zero. Seasonal changes in the nitrites and Si compds. had no simple connection with the development of phytoplankton. The content of nitrites—0.000–0.020 mg. N/l. to the end of the winter—was at a min. during the summer, and during the floods it increased. Si was at a max. during the winter (1.400 mg./l.); during the growing season there was 0.400–1.000 mg. Fe/l., and during autumn and winter it was 0.025 mg. During the floods the Fe was 0.070 mg./l. but during the summer it decreased sharply, similarly to nitrates and phosphates. The variation in the content of phosphates and Fe during one day well illustrates the activity of phytoplankton. During a period of increased development of phytoplankton, the daily consumption of phosphates for a photosynthesis layer (0–2 m.) comprised 0.065 mg./l. The development rate of the phytoplankton was held by the chlorophyll concn. in acetone axts.; these concns. varied in terms of pigment from 14 to 193 in 1946 and from 17 to 440 in 1947. On the basis of daily observations in calm weather the factor limiting the development of phytoplankton proved to be N compds. Judging by the consumption of phosphates, the change in the O_2 sum., and the change in pH, the development of algae continues after the nitrates are gone, although the chlorophyll content barely changes. Thus many small algae, which disappeared at night, existed in the 0.5-m. layer. At night the algae died out (~ 50%, of their amt.), and they dropped down to the bottom at the rate of 2 m./hr. The max. daily production of algae in the Rybinsk reservoir, on the basis of O and consumption of phosphates, equaled 90 mg./l. on the av.; the mean daily production was ~22 mg./l., that is, 178,640 tons for the 0–2 m. layer of water in the reservoir. After 90 days of the growing season this comprised 16 million tons.

Marjorie Kelner

APPROVED FOR RELEASE: 03/20/2001 CIA-RDP86-00513R001860920007-8"

"APPROVED FOR RELEASE: 03/20/2001 CIA-RDP86-00513R001860920007-8

VORONKOV, P.P., AND SOKOLOVA, O.K.

"Influence of Afforestation of Watersheds on the Mineralization of the Water and on the Magnitude of the Ion Runoff," Tr. Gos Gidrolog. In-ta, No 37 (91), 81-93, 1953

In the Valday Scientific Research Hydrological Station of the State Hydrological Institute, hydrologists have investigated the mineralization of the water flowing off forested and nonforested watersheds. The objects of the observations were the Tayezhnyy (forested), Usad'yevskiy (nonforested), and Priusadebnyy (nonforested) sites, and the Arkhiyereyskiy brook. The total ion runoff from the forested watershed on the average over 4 years amounts to 6.4 m/km, but from nonforested watersheds it is 16.9 m/km. The mineralization of the water of forested watersheds for 4 years amounts to 45 mg/liter; from nonforested watersheds for the same length of time it is 52 mg/liter. (RZhGeol, No 1, 1955)

SO: Sum. No. 536, 10 Jun 55

APPROVED FOR RELEASE: 03/20/2001 CIA-RDP86-00513R001860920007-8"

"APPROVED FOR RELEASE: 03/20/2001 CIA-RDP86-00513R001860920007-8

VORONKOV, P.P.; SOKOLOVA, O.K.

Hydrochemical characteristic of the coloring of surface water. (MIRA 11:6)
Trudy GGI no.37:95-137 '53.
(Water) (Color)

APPROVED FOR RELEASE: 03/20/2001 CIA-RDP86-00513R001860920007-8"

"APPROVED FOR RELEASE: 03/20/2001 CIA-RDP86-00513R001860920007-8

VORONKOV, P.P.

ALEKIN, Oleg Aleksandrovich; SHATILINA, M.G., redaktor; VORONKOV, P.P., otvetstvennyy redaktor; FLAUM, M.Ya., tekhnicheskiy redaktor.

[Chemical analysis of inland waters; study under stationary conditions] Khimicheskii analiz vod sushi; pri statsionarnom ikh izuchenii. Leningrad, Gidrometeorologicheskoe izd-vo, 1954. 199 p. (MLRA 8:2)

(Water--Analysis)

APPROVED FOR RELEASE: 03/20/2001 CIA-RDP86-00513R001860920007-8"

"APPROVED FOR RELEASE: 03/20/2001 CIA-RDP86-00513R001860920007-8

VORONKOV, V.

USSR

The hydrochemical regime of the steppe ponds in the forest steppe zone during high waters. P. P. Voronkov (State Hydrol. Inst., Leningrad). *Gidrokhim. Materialy* 22, 45-56(1954).—Under conditions of heavy rainfall the waters of the ponds even in the most arid regions are low in minerals (200-300 mg./l.) and have a favorable bicarbonate content, with Ca prevailing. During the dry periods, when the water level drops, the mineral content rises to 4000-6000 mg./l. and even higher. The compn. of the waters in the ponds is detd. by the compn. of the soil moisture and of the ground waters which in a measure det. the compn. of the former. For examn. of the dynamics of the mineral content of the waters in the ponds, analyses were made of runoff waters entering them after heavy rains. From the chernozem soils low in org. matter, the surface waters of a rain on Sept. 13 contained around 110 mg./l. salts contg. a high HCO_3 and Ca content. Thawing water supplied appreciable quantities of SO_4, and the total minerals varied from 166 to 115 mg./l. in 3 sep. samplings. As the surface waters cease their movement, the ground waters and excess soil moisture begin to raise and these contain more minerals. Data are presented on the HCO_3, SO_4, Cl, Ca, Mg, and K + Na contents of the surface runoff waters, river waters, and pond waters during the spring in the southern part of the Don River basin. Similar data and discussions are presented for the forest steppe zone in the northern part of the Don River basin. J. B. Joffe.

APPROVED FOR RELEASE: 03/20/2001 CIA-RDP86-00513R001860920007-8"

"APPROVED FOR RELEASE: 03/20/2001 CIA-RDP86-00513R001860920007-8

VORONKOV, P.P.

Peculiarities in the formation of the chemical composition of surface waters in various geographic zones. Dokl.AN SSSR 94 no. 2:293-296 Ja '54. (MLRA 7:1)

1. Gosudarstvennyy gidrologicheskiy institut. Leningrad.
(Water--Analysis) (Hydrology)

APPROVED FOR RELEASE: 03/20/2001 CIA-RDP86-00513R001860920007-8"

"APPROVED FOR RELEASE: 03/20/2001 CIA-RDP86-00513R001860920007-8

VORONKOV, P.P.

USSR/Miscellaneous - Hydrology

Card 1/1 Pub. 22 - 18/47

Authors : Voronkov, P. P.

Title : About certain rules governing the formation of the chemical composition of atmospheric precipitations

Periodical : Dok. AN SSSR 98/5, 765-768, Oct 11, 1954

Abstract : The chemical composition of atmospheric precipitations of the northern and southern regions of the USSR was investigated. The content of Cl' ions in river and swamp waters was established. The basic source of Cl' ions for atmospheric precipitations of northern regions was found to be the smallest NaCl particles which also serve as condensation nuclei. The content of SO_4'' ions was determined by the degree of contamination of the atmosphere by SO_2. The laws governing the formation of chemical contents in precipitations are outlined. Twelve USSR references (1911-1952). Table.

Institution : State Hydrological Institute, Leningrad

Presented by: Academician A. G. Betekhtin, August 11, 1954

APPROVED FOR RELEASE: 03/20/2001 CIA-RDP86-00513R001860920007-8"

"APPROVED FOR RELEASE: 03/20/2001 CIA-RDP86-00513R001860920007-8

VORONKOV, Pavel Pavlovich, kandidat geograficheskikh nauk; ZAYKOV, B.D. redaktor, doktor geograficheskikh nauk, professor; SHATILINA, M.K., redaktor; SOLOVEYCHIK, A.A., tekhnicheskiy redaktor

[Formation of the chemical cortitution of surface water of steppe and wooded steppe zones of the European territories of the U.S.S.R. Formirovanie khimicheskogo sostava poverkhnostnykh vod steppoi i lesostepnoi zon Evropeiskoi teritorii SSSR. Pod Red. B.D.Zaikova. Leningrad, Gidrometeorologicheskoe izd-v, 1955. 35o p.(MLRA 8:10)
(Water--Analysis) (Steppes)

APPROVED FOR RELEASE: 03/20/2001 CIA-RDP86-00513R001860920007-8"

"APPROVED FOR RELEASE: 03/20/2001 CIA-RDP86-00513R001860920007-8

AID P - 3183

Subject : USSR/Meteorology

Card 1/1 Pub. 71-a - 10/23

Author : Voronkov, P. P.

Title : On using a chemical process to determine the content of ground-water runoff of a river

Periodical : Met. i gidr., 5, 40-44, S/O 1955

Abstract : The author criticizes A. T. Ivanov's method of determining the chemical properties of a river runoff by analyzing only ground waters and surface water without considering the permanent water table and seepage water. Five Russian references, 1948-1953.

Institution : None

Submitted : No date

APPROVED FOR RELEASE: 03/20/2001 CIA-RDP86-00513R001860920007-8"

"APPROVED FOR RELEASE: 03/20/2001 CIA-RDP86-00513R001860920007-8

APPROVED FOR RELEASE: 03/20/2001 CIA-RDP86-00513R001860920007-8"

"APPROVED FOR RELEASE: 03/20/2001 CIA-RDP86-00513R001860920007-8

APPROVED FOR RELEASE: 03/20/2001 CIA-RDP86-00513R001860920007-8"

"APPROVED FOR RELEASE: 03/20/2001 CIA-RDP86-00513R001860920007-8

14-57-6-12207

Translation from: Referativnyy zhurnal, Geografiya, 1957, Nr 6, p 74 (USSR)

AUTHORS: Bogoroditskiy, A., Voronkov, P. P.

TITLE: Surface Waters in Northern Kazakhstan (Poverkhnostnyye vody Severnogo Kazakhstana--in Kazakhstan)

PERIODICAL: S. kh. Kazakhstana, 1956, Nr 8, pp 35-37

ABSTRACT: The GGI (State Hydrological Institute) expedition to the Akmolinsk, Kokchetav, and Kustanay districts in the spring of 1955 determined that the mineral content of the waters running throught the network of fine streamlets on the slopes of water collectors during spring floods was generally 50 to 150 mg/l. This means that these slope waters are suitable for drinking, industry, irrigation, etc. However, the chemical quality of these waters deteriorates greatly as they run further through the lower parts of the relief and

Card 1/2

APPROVED FOR RELEASE: 03/20/2001 CIA-RDP86-00513R001860920007-8"

"APPROVED FOR RELEASE: 03/20/2001 CIA-RDP86-00513R001860920007-8

Surface Waters in Northern Kazakhstan (Cont.) 14-57-6-12207

in the valleys of the river system. This is caused by the fact that chlorides and sulfates, leached out of the ground, have been accumulating here for centuries. The author makes recommendations as to where slope water collection areas should be located, and how to prevent the increase of their salinity.

Card 2/2

G. D.

APPROVED FOR RELEASE: 03/20/2001 CIA-RDP86-00513R001860920007-8"

"APPROVED FOR RELEASE: 03/20/2001 CIA-RDP86-00513R001860920007-8

VORONKOV, P.P.; BOGORODITSKIY, A.P.

Water resources of North Kazakhstan. Vest.AN Kazakh.SSR 12 no.4: 46-50 Ap '56. (MLRA 9:8)

(Kazakhstan--Water supply)

APPROVED FOR RELEASE: 03/20/2001 CIA-RDP86-00513R001860920007-8"

"APPROVED FOR RELEASE: 03/20/2001 CIA-RDP86-00513R001860920007-8

VORONKOV, P.P.

Hydrochemical principles of constructing artificial lakes in zones of insufficient humidity. Dokl.AN SSSR 111 no.1:178-181 insufficient humidity. Dokl.AN SSSR 111 no.1:178-181 N-D '56. (MLRA 10:2)

1. Gosudarstvennyy gidrologicheskiy institut, Ekspeditsiya po izucheniyu vodnykh resursov tselinnykh i zaleshnykh zemel'. Predstavleno akademikom N.M.Strkhovym.
(Reservoirs)

APPROVED FOR RELEASE: 03/20/2001 CIA-RDP86-00513R001860920007-8"

"APPROVED FOR RELEASE: 03/20/2001 CIA-RDP86-00513R001860920007-8

VOROBKOV, P.P.

Hydrochemical description of the main categories of surface waters. Dokl.AN SSSR 111 no.2:438-441 N '56. (KIRA 10:1)

1. Gosudarstvennyy gidrologicheskiy institut Ekspeditsiya po izucheniyu vodnykh resursov tselinnykh i zalezhnykh zemel'. Predstavleno akademikom N.M. Strakhovym.
(Water supply) (Hydrology)

APPROVED FOR RELEASE: 03/20/2001 CIA-RDP86-00513R001860920007-8"

"APPROVED FOR RELEASE: 03/20/2001 CIA-RDP86-00513R001860920007-8

15-1957-10-14177D

Translation from: Referativnyy zhurnal, Geologiya, 1957, Nr 10, p 130 (USSR)

AUTHOR: Voronkov, P. P.

TITLE: Development of the Chemical Composition of the Surface Waters of the Steppe and Forest-Steppe Zones in the European Part of the USSR (Formirovaniye khimicheskogo sostava poverkhnostnykh vod stepnoy i lesostepnoy zon Yevropeyskoy territorii SSSR)

ABSTRACT: Bibliographic entry on the author's dissertation for the degree of Doctor of Geographical Sciences, presented to MGU (Moscow State University), Leningrad [sic!], 1957.

ASSOCIATION: MGU (Moscow State University), Moscow

Card 1/1

APPROVED FOR RELEASE: 03/20/2001 CIA-RDP86-00513R001860920007-8"

"APPROVED FOR RELEASE: 03/20/2001 CIA-RDP86-00513R001860920007-8

VORONKOV, P. P.

AUTHORS: Voronkov, P. P.; Bogorodibskiy, A. P.

TITLE: General Hydrochemical Outline of Water Supply Elements of Artificial Basins of Northern Kazakhstan (Obshchaya gidrokhimicheskaya kharakteristika elementov vodnogo pitaniya iskusstvennykh vodoyemov Severnogo Kazakhstana)

PERIODICAL: Meteorologiya i Gidrologiya, 1957, No. 2, pp. 38-43 (U.S.S.R.)

ABSTRACT: The article presents hydrochemical data to be considered in selecting sites for reservoirs to be used as water supply for industrial and public consumption. In planning ponds, excavations etc., sites should be chosen at such elevations to exclude the admission of highly mineralized ground waters and lessen effect of alluvial soil levels.

The basic factors affecting the chemical quality of water accumulating in reservoirs are: 1) mineralization and chemical composition of waters of various origin which supply artificial basins: a. soil-surface, b. soil-underground and c. underground waters; 2) proportionate amounts of these waters entering within fixed periods;

Card 1/4

APPROVED FOR RELEASE: 03/20/2001 CIA-RDP86-00513R001860920007-8"

"APPROVED FOR RELEASE: 03/20/2001 CIA-RDP86-00513R001860920007-8

General Hydrochemical Outline of Water Supply Elements of Artificial Basins of Northern Kazakhstan

3) evaporation from area of the surface and the precipitation falling on it; and 4) quantitative outline of water use and losses to infiltration.

Of these factors, 1)a. is most important; these are waters occurring during spring flood stage and for average reservoirs (2000 - 8000 sq/km) comprise 70 - 80% of annual runoff, and 100% for smaller ones. Water basins of the European part of the U.S.S.R. are characterized by having a soil-underground layer salinified by soluble compounds, mostly chlorides. The author concludes that the higher the artificial basin is situated with reference to the salinified part of the talweg, the greater the possibility of accumulating good quality water in the basin.

Personalities cited by the author are: P. P. Voronkov (2), for his paper on chemical composition of surface waters of the steppe and forest-steppe zones of the European sector of the U.S.S.R.; K. P. Voskresenskiy (3), for his hydrological calculations for planning works on small rivers, streams, and temporary water courses. There are 2 figures: Fig. 1 indicates general outline of mineralization in milligrams per liter and composition of chief anions (% equiv.) of

Card 2/4

APPROVED FOR RELEASE: 03/20/2001 CIA-RDP86-00513R001860920007-8"

"APPROVED FOR RELEASE: 03/20/2001 CIA-RDP86-00513R001860920007-8

General Hydrochemical Outline of Water Supply Elements of Artificial Basins of Northern Kazakhstan

riverbed waters during the spring high water period for small and medium water basins (observations points are pinpointed with solid black dots; various hachurings are used for various % contents of HCO_3^- and Ca^{++}). Fig. 2 portrays the same, but for micro-stream waters sampled on slopes of water basins during the spring high water period. Only the % of HCO_3^- is depicted in the 3 types of hachuring. The regions included in the figures are Kustanay, Kokchetav, and Akmolinsk, drained by such streams at the Tobol, Ayat, Ul'kayak, Sary-Turgay, Ubagan, Ishim, Chaglinka, Nura, and Selety.

There are four equations developed by the author. An explanation of Eq. (1) may serve to clarify Eqs. 2, 3, and 4. Eq. (1):

$$M_K = \frac{A - B}{C - D},$$

in which $A = M_H V_H + M_{пр} V_{пр} + M_{л} V_{лт}$;
$B = M_{л} V_{ло} + 0.5 M_H V_{CT}$;
$C = V_H + V_{пр} + V_{gc} + V_{лт}$;
$C = V_{исп} + V_{ло} + 0.5 V_{CT}$.

Card 3/4

APPROVED FOR RELEASE: 03/20/2001 CIA-RDP86-00513R001860920007-8"

"APPROVED FOR RELEASE: 03/20/2001 CIA-RDP86-00513R001860920007-8

General Hydrochemical Outline of Water Supply Elements of Artificial Basins of Northern Kazakhstan

In the last mentioned equalities, M_H and V_H represent mineralization and volume of water of the reservoir at the beginning of the calculation period; $M_{пр}$, $V_{пр}$ stand for the mean colloidal mineralization of the influx and its volume, $M_{зл}$ and $V_{зл}$ is the mean mineralization of the ice and volume of water forming as result of thawing, $V_{зо}$ is volume of water being expended in ice formation, V_{CT} is the runoff amount, V_{OC} is the volume of precipitation falling on the reservoir surface, and $V_{исп}$ is the amount of evaporation.

There are 3 references, all of which are Slavic.

ASSOCIATION:

PRESENTED BY:

SUBMITTED:

AVAILABLE:

Card 4/4

APPROVED FOR RELEASE: 03/20/2001 CIA-RDP86-00513R001860920007-8"

"APPROVED FOR RELEASE: 03/20/2001 CIA-RDP86-00513R001860920007-8

VORONKOV, P.P.

Basic features in the formation of chemical composition of water in artificial bodies of water and calculation of their mineralization. (MIRA 11:10)
Trudy Lab. ozeroved. 7:121-128 '58.

1.Gosudarstvennyy gidrologicheskiy institut Glavnogo upravleniya Gidrometeorologicheskoy sluzhby SSSR.
(Hydrology)

APPROVED FOR RELEASE: 03/20/2001 CIA-RDP86-00513R001860920007-8"

"APPROVED FOR RELEASE: 03/20/2001 CIA-RDP86-00513R001860920007-8

ACC NR: AT6035249 SOURCE CODE: UR/3186/66/000/137/0058/0124

AUTHOR: Voronkov, P. P. (Professor; Doctor of geographical sciences); Sokolova, O. K.

ORG: none

TITLE: Formation of the chemical composition of local run-off waters

SOURCE: Leningrad. Gosudarstvennyy gidrologicheskiy institut. Trudy, no. 137, 1966. Formirovaniye khimicheskogo sostava vod mestnogo stoka (Formation of the chemical composition of local runoff), 58-124

TOPIC TAGS: water, chemical composition, surface water, underground water, organic chemical, soil chemical

ABSTRACT: On the basis of hydrochemical observations made during expeditions repeated over a number of years, the conditions of organic substances dissolved in local run-off waters in Northern Kazakhstan and the Altay tableland is examined. The principal characteristics of the quantity and quality of these substances in waters of different origin are given: atmospheric waters, water discharged by rivulets along mountain slopes, and river water collected in small catchment

Card 1/2

APPROVED FOR RELEASE: 03/20/2001 CIA-RDP86-00513R001860920007-8"

"APPROVED FOR RELEASE: 03/20/2001 CIA-RDP86-00513R001860920007-8

ACC NR: AT6035249

basins. The latter are examined as waters forming the composition of organic substances dissolved in the various thicknesses of soil material during discharge into river bed systems during the principal hydrological periods. The wealth of data accumulated makes it possible to include in the article some discussion pertaining to the origin and transformation of organic substances dissolved in natural waters. The text includes 7 maps of the area. Orig. art. has: 15 figures and 19 tables. [GC]

SUB CODE: 07, 08, 20/ SUBM DATE: none/ ORIG REF: 008/

Card 2/2

APPROVED FOR RELEASE: 03/20/2001 CIA-RDP86-00513R001860920007-8"

"APPROVED FOR RELEASE: 03/20/2001 CIA-RDP86-00513R001860920007-8

VORONKOV, P.P.

Hydrochemical principles of the desalinization process and the soda period of the hydrocarbonate stage of the drainage areas of northern Kazakhstan and the Altai plain (slope, river, and lake waters). Trudy GGI no.119:7-52 '65.

(MIRA 18:9)

APPROVED FOR RELEASE: 03/20/2001 CIA-RDP86-00513R001860920007-8"

"APPROVED FOR RELEASE: 03/20/2001 CIA-RDP86-00513R001860920007-8

VORONKOV, P.P.

Hydrochemical basis of the isolation of local runoff and the method for dissection of its hydrograph. Meteor.i gidrol. no.8: 21-28 Ag '63. (MIRA 16:10)

1. Gosudarstvennyy gidrologicheskiy institut.

APPROVED FOR RELEASE: 03/20/2001 CIA-RDP86-00513R001860920007-8"

"APPROVED FOR RELEASE: 03/20/2001 CIA-RDP86-00513R001860920007-8

VORONKOV, P.P.

Regularties in the process of the formation and zoning of the chemical composition of waters from local runoff. Trudy GGI no.102:43-119 '63. (MIRA 16:8)

(Water--Composition)

APPROVED FOR RELEASE: 03/20/2001 CIA-RDP86-00513R001860920007-8"

"APPROVED FOR RELEASE: 03/20/2001 CIA-RDP86-00513R001860920007-8

VORONKOV, P.P.

Formation of the chemical composition of atmospheric waters and the effect of it on soil solutions and waters from slopes. Trudy GGI no.102:7-42 '63. (MIRA 16:8)
(Precipitation (Meteorology)--Composition)

APPROVED FOR RELEASE: 03/20/2001 CIA-RDP86-00513R001860920007-8"

"APPROVED FOR RELEASE: 03/20/2001 CIA-RDP86-00513R001860920007-8

VORONKOV, P.P.

Basic factors and regularities in the formation of the chemical composition of water in small reservoirs. Trudy GGI no.102: 120-135 '63. (MIRA 16:8)

(Water--Composition)

APPROVED FOR RELEASE: 03/20/2001 CIA-RDP86-00513R001860920007-8"

"APPROVED FOR RELEASE: 03/20/2001 CIA-RDP86-00513R001860920007-8

VORONKOV, P.P.; ZUBAREVA, V.I.

Content of nutriments for plants combining nitrogen, phosphorus, and iron in waters of various origins. Trudy GGI no.102:136-168 '63. (MIRA 16:8)

(Water--Composition) (Plants--Nutrition)

APPROVED FOR RELEASE: 03/20/2001 CIA-RDP86-00513R001860920007-8"

"APPROVED FOR RELEASE: 03/20/2001 CIA-RDP86-00513R001860920007-8

41396

S/089/62/013/004/003/011
B102/B108

24.6730

AUTHORS: Voronkov, R. M., Peyzner, M. I., Flerov, N. N., Aref'yev, A. V., Basalayev, M. I., Korolev, V. M., Moukalev, S. S., Osipov, V. P.

TITLE: 30-Mev linear electron accelerator designed for neutron spectroscopy

PERIODICAL: Atomnaya energiya, v. 13, no. 4, 1962, 327 - 336

TEXT: The accelerator, designed by the Radiotekhnicheskiy institut AN SSSR (Radio Engineering Institute AS USSR) and used for neutron spectroscopy at the Ordena Lenina Institut atomnoy energii im. I. V. Kurchatova AN SSSR (Lenin Order Institute of Atomic Energy imeni I. V. Kurchatov AS USSR), is a traveling-wave accelerator which produces a pulsed electron beam with an energy of 30 Mev and a current of up to 500 ma. It operates on 2764 Mc/sec at a pulse repetition frequency of 100 cps and with pulse durations of 0.6, 0.2, or 0.05 μsec. At the input of the diaphragmed waveguide there is a field of 150 kv/cm. The efficiency of h-f energy conversion is 30-35%. The maximum h-f power for λ = 10.8 cm is 20 Mw. The diaphragmed waveguide

Card 1/6

APPROVED FOR RELEASE: 03/20/2001 CIA-RDP86-00513R001860920007-8"

"APPROVED FOR RELEASE: 03/20/2001 CIA-RDP86-00513R001860920007-8

was designed as a homogeneous system with constant phase velocity (Fig. 2). Each of its six cells has four 4-mm openings to improve the evacuation of the system. The h-f power from the generator is fed to the accelerator through a standard square feeder waveguide (34 by 72 mm, 6 m long) wherein H_{10}-type waves are excited. This waveguide is enclosed on each side by glass windows of circular conical shape. The h-f generator is an unsoldered klystron equipped with a titanium getter and fed by a thyratron modulator. The modulator is fed with direct current from a rectifier with a voltage regulator at its primary winding. Modulator and klystron are connected by a 65-Mw pulse transformer (boost 4.63). The klystron operates at a maximum voltage of 320 kv. Its h-f excitation is made by a magnetron with a power of 10-15 kw. To prevent h-f breakdown in the klystron, its voltage supply is cut off automatically when excess currents amount to 30%, or if an h-f breakdown occurs in the accelerator part. The pulsed injection current is supplied by a three-electrode electron gun designed similarly to Pierce's double-electrode gun (Fig. 6). The vacuum system of the accelerator is connected to three titanium ion getter pumps as designed by the Fiziko-tekhnicheskiy institut AN USSR (Physicotechnical Institute AS UkrSSR). The necessary operating vacuum of $(2-4)\cdot 10^{-6}$ mm Hg can be created

APPROVED FOR RELEASE: 03/20/2001 CIA-RDP86-00513R001860920007-8"

"APPROVED FOR RELEASE: 03/20/2001 CIA-RDP86-00513R001860920007-8

by one such pump and the three ensure continuous operation for 10-12 hrs a day during three to four months. A set of mechanical pumps is used as a forepump (10^{-2} to 10^{-3} mm Hg). The controls and switch gear are installed in a separate building. The accelerated electron beam is focused onto a U^{238} target in a water pool. The bremsstrahlung which occurs in the target produces neutrons by (γ, n) or (γ, f) reactions. The neutrons of ~1.5 Mev have Maxwellian energy distribution. The yield is 10^{14} neutrons per sec. The entire unit is enclosed by a concrete shield (1.5 m thick) provided with several experimental channels (100, 200, and 300 mm wide)(Fig.7). The current, spectrum, pulse shape, and radial distribution of the current density of the electron beam were measured. Numerical data are given for time of flight and background. There are 9 figures and 2 tables.

SUBMITTED: Dezember 18, 1961

APPROVED FOR RELEASE: 03/20/2001 CIA-RDP86-00513R001860920007-8"

"APPROVED FOR RELEASE: 03/20/2001 CIA-RDP86-00513R001860920007-8

Table 1.

(1) pulse duration, μsec;	0,6		0,2		0,05	
(2) pulse current, ma;	160	250	160	320	160	500
(3) $E_{el,max}$, Mev;	27,5	25,0	31,5	25,0	32,0	29,0
(4) relative neutron yield.	9	10	3,5	6	1	2,5

Fig. 7. Shielding system.
Legend: (1) accelerator; (2) target; (3) experimental channels.

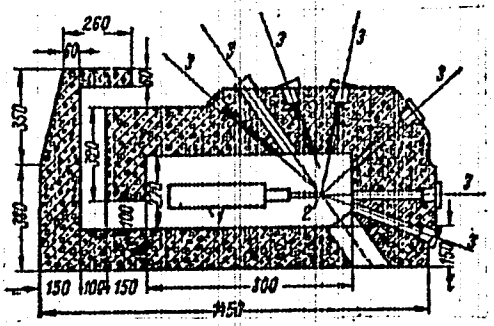

APPROVED FOR RELEASE: 03/20/2001 CIA-RDP86-00513R001860920007-8"

"APPROVED FOR RELEASE: 03/20/2001 CIA-RDP86-00513R001860920007-8

30-Mev linear electron ...

S/089/62/013/004/003/011
B102/B108

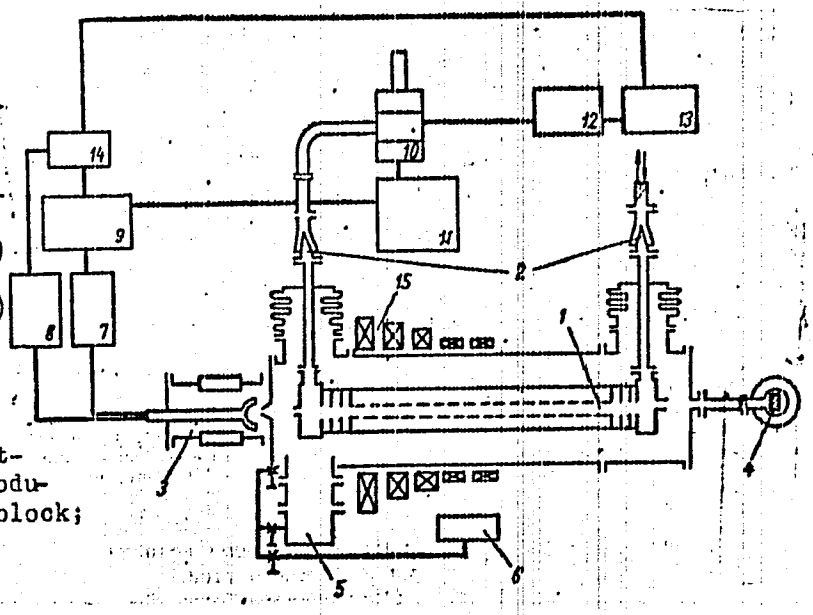

Fig. 1. Block diagram of accelerator. Legend: (1) accelerator tube; (2) waveguide windows; (3) electron gun; (4) target with moderator; (5) titanium pump; (6) forepumps; (7) pulse transformer guns; (8) gun modulator; (9) klystron modulator; (10) klystron; (11) pulse transformer of klystron; (12) magnetron; (13) magnetron modulator; (14) starting block; (15) focusing coils.

Card 5/6

APPROVED FOR RELEASE: 03/20/2001 CIA-RDP86-00513R001860920007-8"

"APPROVED FOR RELEASE: 03/20/2001 CIA-RDP86-00513R001860920007-8

Fig. 6. Electron gun.
Legend: (1) anode, (2) electrode near the cathode; (3) grid; (4) cathode.

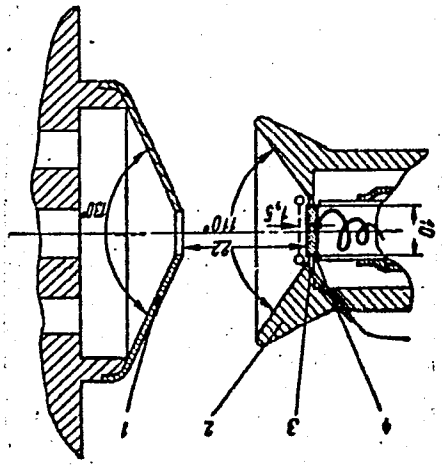

Fig. 2. Diaphragmed waveguide section. D = 27 mm, 2a = 30 mm, a/λ = 0.14, 2b = 86 mm, d = 6.4 mm, overall length 400 cm, wall thickness 7 mm.

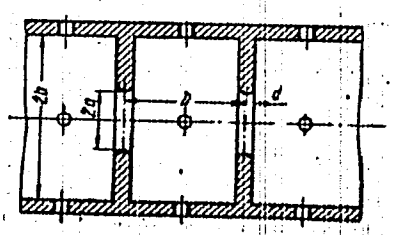

APPROVED FOR RELEASE: 03/20/2001 CIA-RDP86-00513R001860920007-8"

"APPROVED FOR RELEASE: 03/20/2001 CIA-RDP86-00513R001860920007-8

VORONKOV, R. M.

95

S/089/62/013/006/019/027
B102/B186

AUTHORS: G. T. and M. R.

TITLE: Nauchnaya konferentsiya Moskovskogo inzhenerno-fizicheskogo instituta (Scientific Conference of the Moscow Engineering Physics Institute) 1962

PERIODICAL: Atomnaya energiya, v. 13, no. 6, 1962, 603 - 606

TEXT: The annual conference took place in May 1962 with more than 400 delegates participating. A review is given of these lectures that are assumed to be of interest for the readers of Atomnaya energiya. They are following: A. I. Leypunskiy, future of fast reactors; A. A. Vasil'yev, design of accelerators for superhigh energies; I. Ya. Pomeranchuk, analyticity, unitarity, and asymptotic behavior of strong interactions at high energies; A. B. Migdal, phenomenological theory for the many-body problem; Yu. D. Fiveyskiy, deceleration of medium-energy antiprotons in matter; Yu. M. Kogan, Ya. A. Iosilevskiy, theory of the Mössbauer effect; M. I. Ryazanov, theory of ionization losses in nonhomogeneous medium; Yu. B. Ivanov, A. A. Rukhadze, h-f conductivity of subcritical plasma;

Card 1/4

APPROVED FOR RELEASE: 03/20/2001 CIA-RDP86-00513R001860920007-8"

"APPROVED FOR RELEASE: 03/20/2001 CIA-RDP86-00513R001860920007-8

36

S/089/62/013/006/019/027
B102/B186

Nauchnaya konferentsiya...

Ye. Ye. Lovetskiy, A. A. Rukhadze, electromagnetic waves in nonhomogeneous plasma; Yu. D. Kotov, I. L. Rozental', the origin of fast cosmic muons; Yu. M. Ivanov, muon depolarization in solids; V. G. Varlamov, Yu. M. Grashin, B. A. Dolgoshein, V. G. Kirillov-Ugryumov, V. S. Roganov, A. V. Samoylov, μ^- capture by various nuclei; V. S. Demidov, V. G. Kirillov-Ugryumov, A. K. Ponosov, V. P. Protasov, F. M. Sergeyev, scattering of π^- mesons at 5 - 15 Mev in a propane bubble chamber; S. Ya. Nikitin, M. S. Aynutdinov, Ya. M. Solektor, S. M. Zombkovskiy, A. F. Grashin, muon production in π^-p interactions; B. A. Dolgoshein, spark chambers; N. G. Volkov, V. K. Lyapidevskiy, I. M. Obodovskiy, study of operation of a convection chamber; K. G. Finogenov, production of square voltage pulses of high amplitudes; G. N. Aleksakov, problems of color vision; V. K. Lyapidevskiy, relation between number of receivers and number of independent colors; Ye. M. Kudryavtsev, N. N. Sobolev, N. I. Tizengauzen, L. N. Yunitskiy, F. S. Fayzulov, determination of the moment of electron transition of oscillator forces and the widths of the Schuhman-Runge bands of molecular oxygen; B. Ye. Gavrilov, A. V. Zharikov, V. I. Rayko, decomposition of the volume charge of intense ion beams; Ye. A. Kramer-Ageyev, V. S. Troshin, measurement of neutron spectra; G. G. Doroshenko, new methods of fast neutron recording; V. I. Ivanov, dosimetry terminology; R. M. Voronkov,

Card 2/4

APPROVED FOR RELEASE: 03/20/2001 CIA-RDP86-00513R001860920007-8"

"APPROVED FOR RELEASE: 03/20/2001 CIA-RDP86-00513R001860920007-8

35

Nauchnaya konferentsiya... S/089/62/013/006/019/027
B102/B186

design of 30-Mev electron linear accelerator; Ye. G. Pyatnov, A. A. Glazkov, V. G. Lopato, A. I. Finogenov, G. N. Skepskiy, V. D. Seleznev, experimental characteristics of low-energy electron linear accelerators; G. A. Zeytlenk, V. M. Levin, S. I. Piskunov, V. L. Smirnov, V. K. Khokhlov, radiocircuit parameters of ЛУЭ (LUE)-type accelerators; G. A. Tyagunov, O. A. Val'dner, B. M. Gokhberg, S. I. Korshunov, V. I. Kotov, Ye. M. Moroz, accelerator classification and terminology; O. S. Milovanov, V. B. Varaksin, P. R. Zenkevich, theoretical analysis of magnetron operation; A. G. Tragov, P. R. Zenkevich, calculation of attenuation in a diaphragmated waveguide; Yu. P. Lazarenko, A. V. Ryabtsev, optimum attenuation length for linear accelerator; A. A. Zhigarev, R. Ye. Yeliseyev, review on trajectographs; I. G. Morozova, G. A. Tyagunov, review on more than 500 ion sources; M. A. Abroyan, V. L. Komarov, duoplasmatron-type source; V. S. Kuznetsov, A. I. Solnyshkov, calculation and production of intense ion beams; V. M. Rybin (Ye. V. Armenskiy), inductive current transmitters of high sensitivity; V. I. Koroza, G. A. Tyagunov, kinetic description of linear acceleration of relativistic electrons; A. D. Vlasov, phase oscillations in linear accelerators; E. L. Burshteyn, G. V. Voskresenskiy, beam field effects in the waveguide of an electron linear accelerator; R. S. Bobovikov,

Card 3/4

APPROVED FOR RELEASE: 03/20/2001 CIA-RDP86-00513R001860920007-8"

"APPROVED FOR RELEASE: 03/20/2001 CIA-RDP86-00513R001860920007-8

VORONKOV, S.T., inzh.

Heat insulation of large steam turbines. Energ. stroi. no.32:30-37 '62. (MIRA 16:5)

1. TSentrenergoteploizolyatsiya.

APPROVED FOR RELEASE: 03/20/2001 CIA-RDP86-00513R001860920007-8"

"APPROVED FOR RELEASE: 03/20/2001 CIA-RDP86-00513R001860920007-8

VORONKOV, S.T., inzh., KORMER, I.M., inzh.

Thermal insulation for steam pipes. Energetik 8 no.4:11-14 Ap '60. (MIRA 13:8)

(Steampipe coverings) (Insulation (Heat))

APPROVED FOR RELEASE: 03/20/2001 CIA-RDP86-00513R001860920007-8"

"APPROVED FOR RELEASE: 03/20/2001 CIA-RDP86-00513R001860920007-8

VORONKOV, Sergey Timofeyevich; ISEROV, David Zinov'yevich; KAMENETSKIY, Solomon Pavlovich, kand.tekhn.nauk; ZELIKSON, M.M., red.; LARIONOV, G.Ye., tekhn.red.

[Heat insulation for electric stations] Teplovaia izoliatsiia na elektricheskikh stantsiiakh. Pod boshchei red. S.P.Kamenetskogo. Moskva, Gos.energ.izd-vo, 1958. 423 p. (MIRA 11:7)
(Electric power plants) (Insulation (Heat))

APPROVED FOR RELEASE: 03/20/2001 CIA-RDP86-00513R001860920007-8"

"APPROVED FOR RELEASE: 03/20/2001 CIA-RDP86-00513R001860920007-8

VORONKOV, Sergey Timofeyevich; ISEROV, David Zinov'yevich; KAMENETSKIY, Solomon Pavlovich, kand. tekhn. nauk; SINEL'NIKOVA, L.N., red.

[Heat insulation in electric power plants] Teplovaia izoliatsiia na elektricheskikh stantsiiakh. Izd.2., perer. i dop. Moskva, Energiia, 1965. 471 p. (MIRA 18:5)

APPROVED FOR RELEASE: 03/20/2001 CIA-RDP86-00513R001860920007-8"

"APPROVED FOR RELEASE: 03/20/2001 CIA-RDP86-00513R001860920007-8

8(6), 14(6) SOV/91-59-7-1/21

AUTHOR: Iserov, D.Z., Voronkov, S.T., Engineers

TITLE: The Repair of the Heat Insulation at Power Plants

PERIODICAL: Energetik, 1959, Nr 7, pp 1-4 (USSR)

ABSTRACT: The authors present some recommendations for the thermal insulation of steam pipelines. During the past years, at a number of district thermal power plants, the thermal insulation was reconstructed on a large scale. However, the insulation of valves, flange joints and other shaped pipeline sections, as well as boiler casings, remained in an unsatisfactory condition at many thermal power plants. The most serious deficiencies were caused by the fact that the actual operating conditions were not considered when installing the insulation for the first time: the properties of the different types of steel used for the equipment, the necessity of inspecting welded joints during basic overhauls, the expansion of austenitic

Card 1/4

APPROVED FOR RELEASE: 03/20/2001 CIA-RDP86-00513R001860920007-8"

"APPROVED FOR RELEASE: 03/20/2001 CIA-RDP86-00513R001860920007-8

SOV/91-59-7-1/21

The Repair of the Heat Insulation at Power Plants

steel pipelines, vibration and the selection of materials being more stable and reliable in mechanical respect. Presently, the necessary theoretical premises have been established for organizing the repair of the thermal insulation with a determination of its effectiveness. Aluminum linings improve considerable the length of service of thermal insulation and reduce heat losses. New designs of heat insulation were developed under consideration of actual operation conditions of power plants, facilitating the transition to industrial methods of fitting and repairing thermal insulations. By order of Tsentroenergoteploizolyatsii (TsETI), the vibration laboratory KTB of Glavenergoremont conducted studies of the influence of vibration on the durability of thermal insulation materials at the Cherepets GRES. Investigations of vibration sources in turbine and boiler houses showed that vibrations cause changes in the insulation material structure, leading to formation of air pockets, higher

Card 2/4

APPROVED FOR RELEASE: 03/20/2001 CIA-RDP86-00513R001860920007-8"

"APPROVED FOR RELEASE: 03/20/2001 CIA-RDP86-00513R001860920007-8

SOV/91-59-7-1/21

The Repair of the Heat Insulation at Power Plants

temperatures at the outer surfaces of the insulation layer, decreasing the length of service of insulating material. Measurements showed that, for example, feeder lines produce steady-state and periodic oscillations at frequencies of 12.5 and 50 cycles. Oscillations higher than 10 cycles destroy the internal insulation layers. TsETI developed and installed efficient types of detachable insulations for valves and flanges, mats with a glass wool shell and a protective sheet metal lining. The universal, detachable insulation for flanges and valves of steam and water pipelines consists of an aluminum housing lined with mineral wool held in place by mesh wire and covered with asbestos-cement plaster. The material and technological basis for the production of thermal insulation material has been established. TsETI produced detachable insulation shells for diameters of up to 159 mm. In 1957, TsETI started the production of mineral wool with a planned output of 8,000 tons annually.

Card 3/4

APPROVED FOR RELEASE: 03/20/2001 CIA-RDP86-00513R001860920007-8"

"APPROVED FOR RELEASE: 03/20/2001 CIA-RDP86-00513R001860920007-8

SOV/91-59-7-1/21

The Repair of the Heat Insulation at Power Plants

Semi-industrial tests of perlite, a new, highly effective insulating material for temperatures of 600-900 degrees, were completed. TsETI plans the construction of an installation at Dimitrov (Moskovskaya Oblast'), producing adequate amounts of perlite for thermal power plants.

Card 4/4

APPROVED FOR RELEASE: 03/20/2001 CIA-RDP86-00513R001860920007-8"

"APPROVED FOR RELEASE: 03/20/2001 CIA-RDP86-00513R001860920007-8

VORONKOV, S. T.

Bricks

Drying brick walls of steam boilers. Rab. energ. 2, No. 3, 1952.

9. Monthly List of Russian Accessions, Library of Congress, May 1952. 1953, Uncl.

APPROVED FOR RELEASE: 03/20/2001 CIA-RDP86-00513R001860920007-8"

"APPROVED FOR RELEASE: 03/20/2001 CIA-RDP86-00513R001860920007-8

VORONKOV, S.M., inzhener, ISEROV, D.Z., inzhener.

Preparatory work for reconstructing the heat insulation in electric power plants. Elek.sta.28 no.7:6-11 Jl '57. (MERA 10:9)
(Electric power plant)

APPROVED FOR RELEASE: 03/20/2001 CIA-RDP86-00513R001860920007-8"

"APPROVED FOR RELEASE: 03/20/2001 CIA-RDP86-00513R001860920007-8

Distr: 422c

25X1.

maintained.

APPROVED FOR RELEASE: 03/20/2001 CIA-RDP86-00513R001860920007-8"

"APPROVED FOR RELEASE: 03/20/2001 CIA-RDP86-00513R001860920007-8

VORONKOV, S. T.

Steam Boilers

Drying brick walls of steam boilers. Rab. energ. 2 No. 3, 1952.

9. Monthly List of Russian Accessions, Library of Congress, May 1952 1953, Uncl.

APPROVED FOR RELEASE: 03/20/2001 CIA-RDP86-00513R001860920007-8"

"APPROVED FOR RELEASE: 03/20/2001 CIA-RDP86-00513R001860920007-8

1ST AND 2ND ORDERS

PROCESSES AND PROPERTIES INDEX

A-1

BC

Propagation of the coal flame in combustible mixtures containing 0.03% of carbon dissolution. N. Semenov and V. Voronkov (Acta Physicochim. U.R.S.S., 1940, 13, 651—678).—Coal-flame propagation in O_2-V_2 mixtures containing 0.03% of CS_2 has been investigated. As $[O_2]$ decreases, the region of propagation extends to lower temp. The rate of flame propagation increases with temp. and increases rapidly with [illegible] pressure in a max. at ~40 mm. Hg, following [illegible] rate gradually decreases. Equations for the influence of pressure and temp. on the rate of propagation and for the limits of self-ignition and flame propagation have been derived and satisfactorily applied to the experimental data.

C. R. H.

COMMON ELEMENTS

COMMON VARIABLES INDEX

MATERIALS INDEX

ASM-SLA METALLURGICAL LITERATURE CLASSIFICATION

APPROVED FOR RELEASE: 03/20/2001 CIA-RDP86-00513R001860920007-8"

"APPROVED FOR RELEASE: 03/20/2001 CIA-RDP86-00513R001860920007-8

PROCESSES AND PROPERTIES INDEX

24

Ca

Propagation of the cool flame in combustible mixtures containing 0.03% of carbon disulfide. N. N. Semenov and V. Voronkov. *Acta Physicochim. U. R. S. S.* 12, 831-78 (1940) (in English).—The cool flame in a mixt. of O_2 and N_2 contg. 0.03% CS_2 will propagate when the temp. of the flame zone is 50-100° below that of self-ignition under the given conditions. The flame propagates at the same rate upwards and downwards in a vertical tube. Approx. formulas deduced from general statements of the theory of interacting chains, in which branching depends on the square of the concn. of active centers, are in qual. and quant. agreement with the exptl. results. A theoretical discussion is given of the limits of self-ignition and flame propagation. Should no chain interaction exist the regions would coincide. The velocity of propagation of cool flames is deduced from general considerations with the aid of reasonable simplifying assumptions. Curves (pressure vs. temp.) are given for the limits of flame propagation for 4 mixts. contg. up to 100% O_2. The influence of pressure and temp. on propagation velocity is investigated and discussed. H. C. Thomas

ASM-SLA METALLURGICAL LITERATURE CLASSIFICATION

APPROVED FOR RELEASE: 03/20/2001 CIA-RDP86-00513R001860920007-8"

"APPROVED FOR RELEASE: 03/20/2001 CIA-RDP86-00513R001860920007-8

L 14172-66 EWT(m)/EWP(j) WW/RM

ACC NR: AP6003935 SOURCE CODE: UR/0374/65/000/005/0003/0012

AUTHOR: Sukhareva, L. A. (Moscow); Voronkov, V. A. (Moscow); Kalinina, L. Ye. (Moscow); Kharlamova, A. M. (Moscow); Zubov, P. I. (Moscow); Vorontsova, O. I. (Moscow)

ORG: none

TITLE: Investigation of elastomers on the basis of binary and ternary systems

SOURCE: Mekhanika polimerov, no. 5, 1965, 3-12

TOPIC TAGS: elastomer, synthetic rubber, polyamide, polyvinyl chloride, ~~physical property~~ solid mechanical property, thermophysical property

ABSTRACT: Physicomechanical and thermophysical properties of elastomers on the basis of binary and ternary systems with different ratios of polyamide, polyvinyl chloride (PVC), and rubber have been investigated. The binary and ternary systems with optimal physicomechanical properties were chosen on the basis of composition property diagrams. A nonmonotonous change of physicomechanical properties of films with a certain ratio of the PVC and nitrilo-acrylic acid was observed and is ascribed to chemical interaction. It was shown that stabilization of mechanical properties of polyamide in thermal aging can be accomplished by combin-

Card 1/2 UDC: 678:01.539.37

APPROVED FOR RELEASE: 03/20/2001 CIA-RDP86-00513R001860920007-8"

"APPROVED FOR RELEASE: 03/20/2001 CIA-RDP86-00513R001860920007-8

L 14172-66

ACC NR: AP6003935

ation with binary systems. Orig. art. has: 11 figures and 1 table. [Based on author's abstract].

SUB CODE: 11,07/ SUBM DATE: 05Apr65/ ORIG REF: 006/ OTH REF: 002

Card 2/2

APPROVED FOR RELEASE: 03/20/2001 CIA-RDP86-00513R001860920007-8"

"APPROVED FOR RELEASE: 03/20/2001 CIA-RDP86-00513R001860920007-8

VORONKOV, V.

Questions dictated by life. Sov.profsoiuzy 16 no.9:19-21 My '60. (MIRA 13:7)

1. Predsedatel' zavkoma Klinskogo kombinata iskusstvennogo volokna.

(Socialist competition)

APPROVED FOR RELEASE: 03/20/2001 CIA-RDP86-00513R001860920007-8"

"APPROVED FOR RELEASE: 03/20/2001 CIA-RDP86-00513R001860920007-8

VORONKOV, V., instruktor-letchik-planerist.

Greater mastery, and more records! Kryl.rod. 11 no.8:28 Ag '60. (MIRA 13:8)

(Gliding and soaring)

APPROVED FOR RELEASE: 03/20/2001 CIA-RDP86-00513R001860920007-8"

"APPROVED FOR RELEASE: 03/20/2001 CIA-RDP86-00513R001860920007-8

VORONKOV, V., inzh.

Apartment houses along the Black Sea coast in the Caucasus.
Zhil. stroi. no.8:25-27 '59. (MIRA 12:12)
(Caucasus---Apartment houses)

APPROVED FOR RELEASE: 03/20/2001 CIA-RDP86-00513R001860920007-8"

"APPROVED FOR RELEASE: 03/20/2001 CIA-RDP86-00513R001860920007-8

VORONKOV, V.A., red.; DMITRYUK, A.N., red.; INKIN, S.G., red.; MAKSIMOV, I.A., red.; ROMANOV, N.Ye., red.; FEDORENKO, V.A., red.; CHURKIN, A.N., red.; TERENT'YEV, G.A., red.; KOLESOVA, Z.M., tekhn.red.

Sochi. Leningrad, Gos.izd-vo "Iskusstvo," 1959. 19 p., illus. (MIRA 12:9)

(Sochi--Description)

APPROVED FOR RELEASE: 03/20/2001 CIA-RDP86-00513R001860920007-8"

"APPROVED FOR RELEASE: 03/20/2001 CIA-RDP86-00513R001860920007-8

VORONKOV, V.A., inzhener.

Building apartment houses out of large-sized coarse porous concrete building blocks. Bet. i zhel.-bet. no.7:233-236 O '55. (MLRA 9:1)
(Concrete construction)

APPROVED FOR RELEASE: 03/20/2001 CIA-RDP86-00513R001860920007-8"

"APPROVED FOR RELEASE: 03/20/2001 CIA-RDP86-00513R001860920007-8

VORONKOV, V.A.

Earthquake-resistant properties of buildings made of large blocks of coarse-pored concrete. Trudy TSNIIISH no.6:154-164 '61. (MIRA 15:1)

(Earthquakes and buildings)
(Precast concrete construction)

APPROVED FOR RELEASE: 03/20/2001 CIA-RDP86-00513R001860920007-8"

"APPROVED FOR RELEASE: 03/20/2001 CIA-RDP86-00513R001860920007-8

DAYCHIK, M.L., kand.tekhn.nauk; VIL'FERT, K.I.; VORONKOV, V.A.

Devices for statistical investigations of accelerations, stresses, and deformations. Avt.prom. 29 no.10:22-25 O '63. (MIRA 16:10)

1. Gosudarstvennyy soyuznyy ordena Trudovogo Krasnogo Znameni nauchno-issledovatel'skiy avtomobil'nyy i avtomotornyy institut.

APPROVED FOR RELEASE: 03/20/2001 CIA-RDP86-00513R001860920007-8"

"APPROVED FOR RELEASE: 03/20/2001 CIA-RDP86-00513R001860920007-8

29823
S/020/61/140/006/022/030
B107/B101

11.8300

AUTHORS: Ayzatullin, T. A., Voronkov, V. G., and Zubov, V. P.

TITLE: Dependence of the limiting pressure of the explosiveness of gaseous hydrazoic acid on the spark pulse intensity

PERIODICAL: Akademiya nauk SSSR. Doklady, v. 140, no. 6, 1961, 1356 - 1357

TEXT: It is assumed that the limiting pressure of the explosiveness drops with increasing spark energy and then reaches a constant value. This is explained by assuming the occurrence of two different ignition mechanisms (L. N. Khitrin, Fizika goreniya i vzryva (Physics of combustion and explosion explosion), M., 1957). It is shown in the present paper that these assumptions do not hold for gaseous hydrazoic acid. In this case the limiting pressure was found to decrease continuously with increasing spark pulse intensity. The experiments were carried out in an 11-cm diameter spherical glass vessel. Fused-in electrodes gave a 3 mm spark gap in the center of the vessel. The electrodes were connected to an auto-transformer secondary, while capacitors of defined capacitance were discharged over the primary. Hydrazoic acid was prepared by the reaction of pure stearic acid

Card 1/3

APPROVED FOR RELEASE: 03/20/2001 CIA-RDP86-00513R001860920007-8"

"APPROVED FOR RELEASE: 03/20/2001 CIA-RDP86-00513R001860920007-8

29823
S/020/61/140/006/022/030
B107/B101

Dependence of the limiting pressure...

with sodium azide. The tests were carried out at room temperature. Result: The logarithm of the limiting pressure P of the explosiveness is a linear function of $1/C^{0.2}$ (C = capacitance). Fig. 1 gives P as a function of C. Another test series was carried out with a mixture of 25% hydrazoic acid and 75% calcium-chloride dried air. The results may be expressed by $\log P = A/C^n + B$, where A, B, and n are constants dependent on the respective mixture. The expression $\log (P/T^{1+2/n} = A/T_o + B$ derived by N. N. Semenov (N. N. Semenov, Tsepnyye reaktsii (Chain reactions), M. 1934) for thermal self-ignition evidently represents a more general rule applying not only to oxidation reactions and thermal self-ignition, but also to decomposition reactions and spark ignition of widely varying explosive systems. There are 3 figures and 8 references: 6 Soviet and 2 non-Soviet. The reference to the English-language publication reads as follows: M. V. Blance, P. G. Guest, G. Elbe, B. Lewis, J. Chem. Phys., 15 11, 798 (1947).

Card 2/3

APPROVED FOR RELEASE: 03/20/2001 CIA-RDP86-00513R001860920007-8"

"APPROVED FOR RELEASE: 03/20/2001 CIA-RDP86-00513R001860920007-8

29823 S/020/61/140/006/022/030

Dependence of the limiting pressure... B107/B101

ASSOCIATION: Moskovskiy gosudarstvennyy universitet im. M. V. Lomonosova (Moscow State University imeni M. V. Lomonosov)

PRESENTED: May 24, 1961, by N. N. Semenov, Academician

SUBMITTED: April 18, 1961

Fig. 1

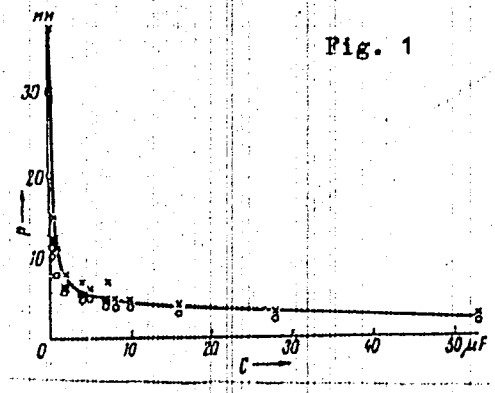

Card 3/3

APPROVED FOR RELEASE: 03/20/2001 CIA-RDP86-00513R001860920007-8"

"APPROVED FOR RELEASE: 03/20/2001 CIA-RDP86-00513R001860920007-8

AYZATULLIN, T.A.; VORONKOV, V.G.; ZUBOV, V.P.

Limit pressure for the explosiveness of gaseous hydrazoic acid as a function of the spark impulse power. Dokl. AN SSSR 140 no.6: 1356-1357 O '61. (MIRA 14:11)

1. Moskovskiy gosudarstvennyy universitet im. M.V.Lomonosova.
(Hydrazoic acid) (Explosions)

APPROVED FOR RELEASE: 03/20/2001 CIA-RDP86-00513R001860920007-8"

"APPROVED FOR RELEASE: 03/20/2001 CIA-RDP86-00513R001860920007-8

600

VORONKOV 47868

1. VORONKOV, V. G.; SEMENOV, N. N.

2. USSR (600)

"The Convection of a Cold Flame in Combustible Mixtures Containing 0.03 Percent Carbon Bisulfide", Zhur. Fiz. Khim 13, No. 12, 1939. Leningrad, Inst. of Chemical Physics, Physico-Chemical Lab., Academy of Sci. USSR. Received 11 Aug. 1939.

9. [redacted] Report U-1615, 3 Jan. 1952.

APPROVED FOR RELEASE: 03/20/2001 CIA-RDP86-00513R001860920007-8"

"APPROVED FOR RELEASE: 03/20/2001 CIA-RDP86-00513R001860920007-8

SOV/62-59-1-4/38

5(4)

AUTHORS: Blyumberg, E. A., Voronkov, V. G., Emanuel', N. M.

TITLE: Gaseous Initiation by Ozone During the Process of Paraffin Oxidation (Gazovoye initsiirovaniye ozonom v protsesse okisleniya parafina)

PERIODICAL: Izvestiya Akademii nauk SSSR. Otdeleniye khimicheskikh nauk, 1959, Nr 1, pp 25 - 29 (USSR)

ABSTRACT: In the present paper the authors investigated the problem of the applicability of ozone as a gaseous initiator in the oxidation of liquid phases. The method of oxidation described in (Ref 3) has been already applied. The paraffin "Kepsen" was oxidized from brown coal supplied by the German Democratic Republic. Experimental data show a number of particular features which occur in the addition of ozone during the oxidation of liquid hydrocarbons. The kinetic curves of the increase in the acid numbers in paraffin oxidation are presented in (Fig 1). The effect of the stimulation with which the reaction was excited at the beginning may be seen from it. If ozone acts in it for a longer period a very peculiar phenomenon is observed. The reaction is

Card 1/4

APPROVED FOR RELEASE: 03/20/2001 CIA-RDP86-00513R001860920007-8"

"APPROVED FOR RELEASE: 03/20/2001 CIA-RDP86-00513R001860920007-8

accelerated (the period of induction is shortened) while the limiting yield of acids is simultaneously reduced. Similar phenomena were also observed in the application of other stimulants. In this connection the experiments with uninterrupted transition of ozonized air were somewhat startling, for the respective kinetic curve indicates a reaction course with maximum velocity and a very high degree of oxidation. It was assumed that the process of oxidation changes in this case and oxidation is produced no longer by molecular oxygen but by ozone. If molecular oxygen participates in the reaction it is included only in very small quantities. (Fig 2) confirms the conclusion that a strong stimulation of the process causes, apart from its acceleration, a reduction of the transformation degree. Interesting results were obtained (Fig 3) by the application of different temperature conditions during the initial stage and the development of the oxidation process effected by a "shock" at the beginning. It may be seen from it that the kinetic curve of acid numbers does not vary in any case. At present, the paraffin is oxidized by means of the manganese oxide

APPROVED FOR RELEASE: 03/20/2001 CIA-RDP86-00513R001860920007-8"

"APPROVED FOR RELEASE: 03/20/2001 CIA-RDP86-00513R001860920007-8

Gaseous Initiation by Ozone During the Process of Paraffin Oxidation SOV/62-59-1-4/38

catalyst under commercial conditions, whereby the process is very complicated, however. Production is simplified and continuous conditions of oxidation are established by the application of ozone as a gaseous initiator. It must be emphasized that oxidation by ozonized air ensures good quality of the oxidation product which meets the requirements called for synthetic fatty acids. Simultaneously a complete utilization of raw material will be achieved. For comparison some properties of the oxidation products synthesized in the presence of the manganese catalyst on the one hand and by uninterrupted oxidation with ozonized air on the other hand are shown in the table. These data were obtained at the laboratory of the Vsesoyuznyy nauchno-issledovatel'skiy institut zhirov (All-Union Scientific Research Institute of Fats) in the Shebekinskiy Kombinat under the supervision of N. K. Man'kovskaya. There are 3 figures, 1 table, and 15 references, 8 of which are Soviet.

Card 3/4

APPROVED FOR RELEASE: 03/20/2001 CIA-RDP86-00513R001860920007-8"

"APPROVED FOR RELEASE: 03/20/2001 CIA-RDP86-00513R001860920007-8

Gaseous Initiation by Ozone During the Process of Paraffin Oxidation SOV/62-59-1-4/38

ASSOCIATION: Institut khimicheskoy fiziki Akademii nauk SSSR (Institute of Chemical Physics of the Academy of Sciences, USSR) Moskovskiy gosudarstvennyy universitet im. M. V. Lomonosova (Moscow State University imeni M. V. Lomonosov)

SUBMITTED: May 29, 1957

Card 4/4

APPROVED FOR RELEASE: 03/20/2001 CIA-RDP86-00513R001860920007-8"

"APPROVED FOR RELEASE: 03/20/2001 CIA-RDP86-00513R001860920007-8

VORONIOV, V.M., master.

Oil heating in starting turbogenerators. Energetik 5 no.8:19 Ag '57. (MLRA 10:10)

(Turbogenerators)

APPROVED FOR RELEASE: 03/20/2001 CIA-RDP86-00513R001860920007-8"

"APPROVED FOR RELEASE: 03/20/2001 CIA-RDP86-00513R001860920007-8

Voronkov, V.P.

120-3-10/40

AUTHORS: Voronkov, V.P. and Frolov, A.M.

TITLE: Coincidence Circuit for Work with Small Amplitude Pulses. (Skhema sovpadeniy dlya raboty s impul'sami maloy amplitudy)

PERIODICAL: Pribory i Tekhnika Eksperimenta, 1957, Nr 3, pp 40-42 (USSR)

ABSTRACT: The circuit (Fig.1) operates on the principle of different amplification of coincident and non-coincident pulses. Negative pulses from two input elements "transducers" are shaped by short-circuited cables ℓ(PK-50) and passed to the tubes $Л_1$ $Л_2$ and $Л_3$ $Л_4$. These stages produced two lengthened and inverted pulses; the positive swings are suppressed by the resistance r and 10 parallel-connected crystal diodes ДГ-Ц4. Normally, the pulses at the anodes of the tubes $Л_1$ and $Л_2$, and also at the anodes of tubes $Л_3$ $Л_4$ must be of equal amplitude. The pulses from the tubes $Л_2$ $Л_4$ pass along the cables ℓ_1 and ℓ_2 (PK-50) to point A and also to points B and C. In the case of coincidence, the pulses at point A add together and pass through the detector to one of the inputs E of the differential amplifier ($Л_5$ and $Л_6$). The

Card 1/4

APPROVED FOR RELEASE: 03/20/2001 CIA-RDP86-00513R001860920007-8"

"APPROVED FOR RELEASE: 03/20/2001 CIA-RDP86-00513R001860920007-8

Coincidence Circuit for Work with Small Amplitude Pulses.

larger of the pulses arriving at the points B and C is passed to point Д but the detector to which the smaller pulse is applied is switched off by the larger pulse. The difference in amplitudes ΔU_{BX} at points E and Д is amplified by the differential amplifier, i.e., at the anodes of Л5 and Л6 appear pulses of opposite polarities and with amplitude U_1 proportional to ΔU_{BX};

$$U_1 = K_1 \Delta U_{BX}$$

where K_1 is the gain of the differential amplifier to the difference. From the anodes of Л5 and Л6 the pulses pass to the input of a second differential amplifier (cathode and grid of Л7). At the anode of Л7 appears a pulse with an amplitude proportional to $K_1 \Delta U_{BX}$:

$U_c = K_2 K_1 \Delta U_{BX}$ where K_2 is the gain of the

APPROVED FOR RELEASE: 03/20/2001 CIA-RDP86-00513R001860920007-8"

"APPROVED FOR RELEASE: 03/20/2001 CIA-RDP86-00513R001860920007-8

Coincidence Circuit for Work with Small Amplitude Pulses.

second differential amplifier to the difference. When only one of the input elements operates, pulses of equal amplitude $U_{вх}$ arrive at the input to the first differential amplifier. At the anodes of $Л_5$ and $Л_6$ appear pulses with amplitudes $K_3 U_{вх}$, where K_3 is the gain of the first differential amplifier when equal amplitude pulses are applied to each of its inputs. In this case, the pulse at the anode of $Л_7$ is determined by the unbalance between the branches of the second amplifier: $U_{нс} = K_4 . K_3 U_{вх}$, where K_4 is the gain of the amplifier stage $Л_7$ to pulses applied simultaneously to the cathode and grid of the valve. $K_1 K_2$ is made very much greater than $K_3 K_4$, so $U_c \gg U_{нс}$, i.e., the pulse at the anode of $Л_7$ is many times greater at coincidence than when caused by a single input pulse. The pulse at the anode of $Л_7$ is lengthened, amplified, discriminated and registered. The threshold of the discriminator is set up so that non-coincident pulses are not registered. The

APPROVED FOR RELEASE: 03/20/2001 CIA-RDP86-00513R001860920007-8"

"APPROVED FOR RELEASE: 03/20/2001 CIA-RDP86-00513R001860920007-8

120-3-10/40

Coincidence Circuit for Work with Small Amplitude Pulses.

selection coefficient α is defined as the ratio of the amplitude of a single input pulse to the amplitude of equal coincident pulses which give the same output voltage, i.e.:

$$\alpha = K_1K_2/K_3K_4 .$$

In practice, for pulse durations $T \sim 5 \times 10^{-9}$ sec. $\alpha = 18$. The cables ℓ_1 and ℓ_2 had to be carefully matched into their load impedances. The pulses at the anodes of valves $Л_1$ and $Л_2$, and $Л_3$ and $Л_4$, were equalized by variable resistances in the anode circuits of $Л_2$ and $Л_4$. The valves (6Ж1П) had to be carefully selected. Time resolutions up to $\tau \sim 5 \times 10^{-9}$ sec (Fig.2) for inputs down to $\sim$0.03 V were obtained. There are 2 illustrations and no references.

SUBMITTED: March 13, 1956.

AVAILABLE: Library of Congress.

Card 4/4 1. Amplitude modulation 2. Coincidence circuits-Operation

APPROVED FOR RELEASE: 03/20/2001 CIA-RDP86-00513R001860920007-8"

"APPROVED FOR RELEASE: 03/20/2001 CIA-RDP86-00513R001860920007-8

VORONKOV, V. P.

VORONKOV, V.P.; FROLOV, A.M.

Coincidence circuits for operations with low-amplitude pulses.
Prib.i tekh. eksp. no.3:40-42 My-Je '57. (MIRA 10:9)
(Pulse techniques (Electronics)) (Photoelectron multipliers)
(Electronic circuits)

APPROVED FOR RELEASE: 03/20/2001 CIA-RDP86-00513R001860920007-8"

"APPROVED FOR RELEASE: 03/20/2001 CIA-RDP86-00513R001860920007-8

USSR/Nuclear Physics - Relativistic particles FD-3211

Card 1/1 Pub. 146 - 36/44

Author : Likhachev, V. M.; Kutsenko, A. V.; Voronkov, V. P.

Title : Problem of the investigation of relativistic particles by the method of nuclear photo-emulsions in an impulse magnetic field

Periodical : Zhur. eksp. i teor. fiz., 29, No 6(12), Dec 1955, 894-895

Abstract : The emulsion method rarely solves the problem of the sign and exact energy of particles. This problem can be solved more completely if the nuclear emulsion is placed during irradiation into a powerful magnetic field, computations showing that sign and impulse (momentum) analysis of particles according to magnetic bending can be carried out sufficiently accurately only in magnetic field strengths of the order 1 to $1.5 \cdot 10^5$ G and higher, which is at present possible only in the form of individual impulses. In works with accelerators also giving beams of particles by individual impulses, the present authors found the use of impulse magnetic fields very convenient thanks to the possibility of synchronization of the beam of particles and the field (they acknowledge that the idea of creating such an arrangement was proposed by G. M. Strakhovskiy in 1951). They employed such an impulse magnetic field for measuring the spectra of photons from the synchrotron of the Physical Institute, Acad. Sci. USSR. The apparatus consists of a current oscillator (P. L. Kapitsa, Proc. Roy. Soc., A 105, 1924), coil and control. They thank Professor V. I. Veksler for assistance.

Institution: Physical Institute im. P. N. Lebedev, Acad. Sci. USSR

Submitted : August 12, 1955

APPROVED FOR RELEASE: 03/20/2001 CIA-RDP86-00513R001860920007-8"

"APPROVED FOR RELEASE: 03/20/2001 CIA-RDP86-00513R001860920007-8

APPROVED FOR RELEASE: 03/20/2001 CIA-RDP86-00513R001860920007-8"

"APPROVED FOR RELEASE: 03/20/2001 CIA-RDP86-00513R001860920007-8

16.8000

S/194/61/000/002/010/039
D216/D302

AUTHOR: Voronkov, V.S.

TITLE: Design for optimum processes in certain relay control systems

PERIODICAL: Referativnyy zhurnal. Avtomatika i radioelektronika, no. 2, 1961, 32, abstract 2 V244 (Tr. Mosk. aviats. in-ta, 1959, no. 112, 39-49)

TEXT: The design for an optimum - from the point of view of speed of operation - automatic relay control system is considered. The system is of a special type, being actuated by two perturbations. The form of the optimum correcting force is derived for two operations of the system (stabilization and tracking). In realizing the optimum automatic control system CAP (SAR) the author suggests for the elements of non-linear feedbacks comparatively simple passive RLC and RC four-poles with relays. 4 references.

Card 1/1

APPROVED FOR RELEASE: 03/20/2001 CIA-RDP86-00513R001860920007-8"

"APPROVED FOR RELEASE: 03/20/2001 CIA-RDP86-00513R001860920007-8

45347

S/181/63/005/002/030/051
B102/B186

54710
24.7300

AUTHOR: Voronkov, V. V.

TITLE: Thermodynamic equilibrium at the lines of separation of three phases

PERIODICAL: Fizika tverdogo tela, v. 5, no. 2, 1963, 571 - 574

TEXT: The conditions of thermodynamic equilibrium are discussed for the three-phase system solid (2)-liquid(1)-gaseous(0) under certain simplifying assumptions such as neglecting the effects of crystalline orientation and of slow phase transitions at the interface with the gas. In the small element considered (Fig. 1) the line of separation is assumed to be shifted by δs thus causing a change in free energy δF. The crystallization front is in thermodynamic equilibrium, its curvature caused by δF is assumed to be compensated; the same is the case for the melt surface being in mechanical equilibrium. Then

$$\delta F = \delta s\,[a_{23} - a_{20}\cos\varphi - a_{13}\cos(\varphi - \psi)] \quad (1)$$

$$\delta F = \delta s\,[a_{23} - \sqrt{a_{20}^2 + a_{13}^2 + 2a_{20}a_{13}\cos\psi\cos(\varphi - \varphi_0)}]. \quad (2)$$

$$\varphi_0 = \operatorname{arctg}\frac{a_{13}\sin\psi}{a_{20} + a_{13}\cos\psi}. \quad (3)$$

Card 1/3

APPROVED FOR RELEASE: 03/20/2001 CIA-RDP86-00513R001860920007-8"

"APPROVED FOR RELEASE: 03/20/2001 CIA-RDP86-00513R001860920007-8

S/181/63/005/002/030/051
B102/B186

where α_{10}, α_{12}, and α_{20} are the surface tension coefficients of the interfaces. $\varphi - \varepsilon < \pi$: solidification; $\varphi - \varepsilon > \pi$: melting. The angle $\psi - \pi = \varepsilon_0$ is called the crystallization angle; for it $\delta F = 0$. When introducing

$$\theta = \arccos \frac{\alpha_{10}^2 + \alpha_{12}^2 - \alpha_{20}^2}{2\alpha_{10}\alpha_{12}} \quad (6), \quad \varphi = \pi \pm \theta \text{ and}$$

$$\psi = \pi \pm \operatorname{arctg} \frac{\alpha_{12} \sin\theta}{\alpha_{10} - \alpha_{12}\cos\theta} \quad (8).$$

Finally the case of complete wettening is discussed. Then $\alpha_{20} > \alpha_{10} + \alpha_{12}$ and (2) is always positive. For a film of thickness d the equilibrium condition with the solid phase reads $b/\rho d^3 = -q\delta T/T_0$ where q is the heat of melting, ρ the density of the liquid and δT the deviation of the temperature from the crystallization temperature T_0. The film itself is not in equilibrium, its liquid is in motion and phase transitions at the interphase to the solid occur. The film thickness decreases with increasing distance from the line of separation; at the critical value $d_0 = \sqrt{\frac{3}{2}\frac{b}{(\alpha_{20} - \alpha_{10} - \alpha_{12})}}$ the film breaks ($\varphi = 0$, $\psi = \pi$). These relations also hold for $\alpha_{10} > \alpha_{12} + \alpha_{20}$.

APPROVED FOR RELEASE: 03/20/2001 CIA-RDP86-00513R001860920007-8"