"APPROVED FOR RELEASE: 03/14/2001 CIA-RDP86-00513R001861010007-7

VORONTSOV, P.N.

Mechanization of canning in the Mtsensk Canning- and Dried Vegetable Combine. Kons.i ov.prom. 17 no.5:8-9 My '62. (MIRA 15:5)

1. Mtsenskiy konservno-ovoshchesushil'nyy kombinat. (Mtsensk—Canning industry) (Assembly-line methods)

APPROVED FOR RELEASE: 03/14/2001 CIA-RDP86-00513R001861010007-7"

"APPROVED FOR RELEASE: 03/14/2001 CIA-RDP86-00513R001861010007-7

CA VORONTSOV, P.P.

31

Industrial applications of luminescent products in light industry. P. P. Vorontsov. *Izvest. Akad. Nauk S.S.S.R., Ser. Fiz.* 15, 501-6(1951).—Solid luminescent masses are made by direct incorporation of phosphors into the plastic by using ZnO, lithopone, or TiO_2 as filler. Incorporation into flexible plastic films of the polyvinyl type, which are made by heating and rolling, is more difficult; it is recommended to add the phosphor during the rolling process or, for plastics smeared on fabrics, by dusting during solidification. Fabrics can be coated with luminescent paints in polyvinyl or vinyl chloride plastics by electrostatic spraying, silk screening, or printing; polymerization is obtained by gentle heating. S. Pakswer

APPROVED FOR RELEASE: 03/14/2001 CIA-RDP86-00513R001861010007-7"

"APPROVED FOR RELEASE: 03/14/2001 CIA-RDP86-00513R001861010007-7

USSR / Human and Animal Morphology - Lymphatic System. S

Abs Jour : Ref. Zhur. - Biol., No. 22, 1958, No. 101492

Author : Vorontsov, P. P.
Inst : Ivanov Medical Institute
Title : The Connections of the Lymph System of the Stomach and the Abdominal Segment of the Esophagus.

Orig Pub : Sb. nauchn. tr. Ivanovsk. med. in-ta, 1957, No. 12, 291-296.

Abstract : In 16 cadavers of children and stillborn infants of 7-8 months, the interstitial polychrome injection and preparation method disclosed that the drainage lymph vessels (LV) of the abdominal segment of the esophagus and of the stomach empty into lymph nodes (LN) which are common to both of them and which include the pericardial /i.e. about the cardial portion of the stomach/, superior

Card 1/2

APPROVED FOR RELEASE: 03/14/2001 CIA-RDP86-00513R001861010007-7"

"APPROVED FOR RELEASE: 03/14/2001 CIA-RDP86-00513R001861010007-7

14

CA

Purification of drinking water with ferrous sulfate. P. V. Vorontsov. *Vodoznabzhenie i Sanit. Tekh.* 15, No. 4, 30-4(1940).—A waste product of a nearby factory, an $FeSO_4$ soln. with chloride and silicate impurities, was used successfully for purification of pond water contg. considerable quantities of org. matter. B. Gutoff

ASM-SLA METALLURGICAL LITERATURE CLASSIFICATION

APPROVED FOR RELEASE: 03/14/2001 CIA-RDP86-00513R001861010007-7"

"APPROVED FOR RELEASE: 03/14/2001 CIA-RDP86-00513R001861010007-7

1804. APPARATUS FOR TAKING LIQUID SAMPLES FROM THE AUTOCLAVE Vorontsov, R. V. (Zavodskaya Lab., 1945, 11, 237-8). An apparatus is described for sampling liquids at high temperatures.

C. A.

APPROVED FOR RELEASE: 03/14/2001 CIA-RDP86-00513R001861010007-7"

"APPROVED FOR RELEASE: 03/14/2001 CIA-RDP86-00513R001861010007-7

CA

7

Ferrocyanide photometric determination of vanadium

H. V. Vorontsov. *Zavodskaya Lab.* 13, 1185-7(1947).

Good results were obtained in the analysis of V steels contg. 0.05-2.2% V. $K_4Fe(CN)_6$ in acid solns. gives with quinquevalent V either ppts. or colloidal solns. of vanadyl ferri- and ferrocyanides. At V concn. less than 0.05 mg./ml. the solns. are transparent and stable (after 15-20 min. at room temp.). At a temp. not over 15° the extinction is proportional to the V concn.; at higher temps. the max. value or one stable for 10 min. is used. Gelatin or starch causes coagulation but excess ferrocyanide has no effect. Dissolve the sample in HNO_3 + H_2SO_4, boil to remove N oxides, cool, make basic with NaOH, cool, and dil. to 500 ml. and filter. To an aliquot add phenolphthalein and acidify with HCl or H_2SO_4. Treat one aliquot with 3 ml. of reagent (42 mg. $K_4Fe(CN)_6$ per ml.), dil. to 100 ml., shake 15 min., and measure in a colorimeter with a blue filter. With standard steel, prep. a curve for calcn.

G. M. Kosolapoff

ASM-SLA METALLURGICAL LITERATURE CLASSIFICATION

APPROVED FOR RELEASE: 03/14/2001 CIA-RDP86-00513R001861010007-7"

"APPROVED FOR RELEASE: 03/14/2001 CIA-RDP86-00513R001861010007-7

CA

14

Coagulation of water by iron sulfate without the use of chlorine. R. V. Yoguntsov. *Zhur. Prikkl. Khim.* (J. Applied Chem.) 23, 357-64(1950).—Coagulation tests were made with Sverdlovsk city water, by using 0.5 0.6-mm. quartz sand filters and settling tanks with conical bottoms. Successful coagulation did not require preliminary oxidation of the sulfate by chlorine or simultaneous addn. of these reagents. Maintenance of theoretical value of 1/7.8 for chlorine/sulfate was not necessary; this value could be reduced and, in case of insufficient amt. of dissolved oxygen in the water, the addn. of chlorine can be dispensed with by increasing the feed of sulfate, at least during certain periods of the year. In case the dissolved oxygen is insufficient completely to oxidize the sulfate, air can be fed into the mixer. B. Z. Kamich

APPROVED FOR RELEASE: 03/14/2001 CIA-RDP86-00513R001861010007-7"

"APPROVED FOR RELEASE: 03/14/2001 CIA-RDP86-00513R001861010007-7

VORONTSOV, R. V.

(1) Chem

Analytical Abst.
Vol. 1 No. 2
Feb. 1954
General Analytical Chemistry

234. Empirical order of solubilities of ferrocyanides. R. V. Vorontsov (J. Anal. Chem., U.S.S.R., 1953, 8 (4), 228-230).—It was assumed that a cation having a less sol. ferrocyanide should replace the cation in the ppt. of a more sol. ferrocyanide. Solubilities of ferrocyanides in approx. neutral solution were assessed on this assumption by four different methods of studying the interactions. All results were consistent and gave the following order of cations with respect to decreasing solubilities of their ferrocyanides: Pb^{++}, Al^{+++}, Bi^{+++}, Sb^{+++}, Mn^{++}, Cd^{++}, Co^{++}, Ni^{++}, Fe^{++}, Zn^{++}, Fe^{+++}, Cu^{++}, Ag^{+}. The results provide methods for purification of Ni electrolytes, detection of Cd in presence of Cu, and detection of Al in presence of all other cations.

G. S. SMITH

9-22-54

APPROVED FOR RELEASE: 03/14/2001 CIA-RDP86-00513R001861010007-7"

"APPROVED FOR RELEASE: 03/14/2001 CIA-RDP86-00513R001861010007-7

Vorontsov, R.U.

APPROVED FOR RELEASE: 03/14/2001 CIA-RDP86-00513R001861010007-7"

"APPROVED FOR RELEASE: 03/14/2001 CIA-RDP86-00513R001861010007-7

VORONTSOV, R.V.

USSR

Detection of cadmium ions in presence of copper ions in ammoniacal solution. R. V. Vorontsov and S. V. Gorbunova. *Trudy Komissii Anal. Khim. Akad. Nauk S.S.S.R., Otd. Khim. Nauk* 5(8), 127-32(1954). Several known methods were tried and the best 3 were studied in detail. In the first method prod. NH_4Cl was added to the sample until soln., H_2S passed in, and the soln. filtered to remove CuS. The filtrate was dild. to twice its vol. with H_2O and H_2S passed in again to ppt. CdS. Detectable min. was 0.24 mg./ml. at the ratio Cd:Cu = 1:17. $(NH_4)_2SO_4$ or NH_4NO_3 cannot be substituted for NH_4Cl. In the second method 1 ml. concd. HCl was added per 5 ml. of test soln., H_2S passed in, and the soln. filtered. The filtrate was dild. to twice its vol. with H_2O, and H_2S passed in again to ppt. CdS. Detectable min. was 0.26 mg./ml. at the ratio Cd:Cu = 1:20. The third method must be followed exactly. To 3 ml. sample was added 9 ml. glycerol soln. (1:10), and 12 ml. 2N NaOH. The ppt. white $Cd(OH)_2$ was washed carefully with H_2O. A stream of H_2S was directed at the filter to form yellow CdS. Detectable min. 0.04 mg./ml. at the ratio Cd:Cu = 1:20. Eurilla Mayerle

APPROVED FOR RELEASE: 03/14/2001 CIA-RDP86-00513R001861010007-7"

"APPROVED FOR RELEASE: 03/14/2001 CIA-RDP86-00513R001861010007-7

VORONTSOV, R.V.

VORONTSOV, R.V.; BAGROVA, R.Kh.

On "fatiguing" of silver catalysts in formalin production. Gidroliz. i lesokhim.prom.8 no.5:15 '55. (MLRA 9:1)

1.Ural'skiy lesotekhnicheskiy institut.
(Catalysts)

APPROVED FOR RELEASE: 03/14/2001 CIA-RDP86-00513R001861010007-7"

"APPROVED FOR RELEASE: 03/14/2001 CIA-RDP86-00513R001861010007-7

SOV/137-59-3-7312

Translation from: Referativnyy zhurnal. Metallurgiya, 1959, Nr 3, p 337 (USSR)

AUTHORS: Krasivskaya, L.T., Vorontsov, R.V.

TITLE: Ferrocyanide Photocolorimetric Method for Determination of Molybdenum (Ferrotsianidnyy fotokolorimetricheskiy metod opredeleniya molibdena)

PERIODICAL: Tr. Ural'skogo lesotekhn. in-ta, 1958, Nr 12, pp 33-38

ABSTRACT: The authors investigated the determination of Mo with ferrocyanide. In order to do this, Mo was separated in the sulfide form, the precipitate was dissolved, and the solutions obtained were diluted with water to 100 cc. Then, in order to determine Mo, aliquot portions of the solutions were placed in Eggertz cylinders, water, 0.7 cc HCl (1:1), and 1 cc of 0.1 N $K_4[Fe(CN)_6]$ solution were added, the total volume was raised to 30 cc, and after 30 min a reading was made on an FEK-M colorimeter. In 20-mm cells and with a Mo content of approximately 0.03 mg/ml, the accuracy of the determination is 0.002-0.004%.

V.M.

Card 1/1

APPROVED FOR RELEASE: 03/14/2001 CIA-RDP86-00513R001861010007-7"

"APPROVED FOR RELEASE: 03/14/2001 CIA-RDP86-00513R001861010007-7

VORONTSOV, S.

Formation and utilization of a consumers' goods fund. Fin.SSSR 22 no.6:84-87 Je '61. (MIRA 14:6)

(Finance)

APPROVED FOR RELEASE: 03/14/2001 CIA-RDP86-00513R001861010007-7"

"APPROVED FOR RELEASE: 03/14/2001 CIA-RDP86-00513R001861010007-7

VOROVTSOV, S.

VOYNOVA, P., inzhener; SOLNTSEVA, G., inzhener; VOROVTSOV, S.

New developments in cutting up beef and sheep carcasses. Mias. ind. SSSR 26 no.4:11-13 '55. (MLRA 8:10)
(Meat cutting)

APPROVED FOR RELEASE: 03/14/2001 CIA-RDP86-00513R001861010007-7"

"APPROVED FOR RELEASE: 03/14/2001 CIA-RDP86-00513R001861010007-7

CHUYANOV,; VORONTSOV,S., inzhener; VOYNOVA,P., inzhener; LEONT'YEV,I., inzhener

What should be the equipment of a modern meat combine. Mias. ind. SSSR 26 no.3:30-37 '55. (MIRA 8:9)

1. Glavnyy inzhener Moskovskogo myasokombinata (for Chuyanov). 2. Moskovskiy myasopererabatyvayushchiy zavod (for Vorontsov). 3. Vsesoyuznyy nauchno-issledovatel'skiy institut myasnoy promyshlennosti (for Voynova). 4. Glavnoye upravleniye myasnoy promyshlennosti (for Leont'yev)
(Meat industry--Equipment and supplies)

APPROVED FOR RELEASE: 03/14/2001 CIA-RDP86-00513R001861010007-7"

"APPROVED FOR RELEASE: 03/14/2001 CIA-RDP86-00513R001861010007-7

PROCESSES AND PROPERTIES INDEX

21

S

Ferrocyanide Photometric Determination of Vanadium. R. V. Yorontsov. (Zavodskaya Laboratoriya, 1947, vol. 13, pp. 1135–1137 [in Russian]: Chemical Abstracts, 1949, vol. 43, June 10, col. 4179). A method is described for the determination of vanadium which gives good results when analysing steels containing 0·05–2·2% of vanadium.

ASM-SLA METALLURGICAL LITERATURE CLASSIFICATION

APPROVED FOR RELEASE: 03/14/2001 CIA-RDP86-00513R001861010007-7"

"APPROVED FOR RELEASE: 03/14/2001 CIA-RDP86-00513R001861010007-7

VORONESOV, S. A.

Lechebnoye i profilakticheskoye deystviye fenotiazina pri askaridioze i geterakidoze kur, "Works on Helminthology" on the 75th Birthday of K. I. Skryabin, Izdat. Akad. Nauk, SSSR, Moskva, 1953, page 115.

APPROVED FOR RELEASE: 03/14/2001 CIA-RDP86-00513R001861010007-7"

"APPROVED FOR RELEASE: 03/14/2001 CIA-RDP86-00513R001861010007-7

USSR/Medicine-Veterinary, Drugs Sep 53

"Technical Thiodiphenylamine, the New Anthelmintic Against Haemonchus in Sheep," Vet Phys S. A. Vorontsov, Grodno Oblast Agr Admn

Veterinariya, Vol 30, No 9, pp 30-31

Technical thiodiphenylamine (phenothiazine which has not been purified) is a fine, lightweight, grayish-green powder. It emulsifies better in water and is more convenient for use in the mass treatment of animals and fowl for parasitic worms than the veterinary phenothiazine. Technical thiodiphenylamine

270173

paste, prepared in a form of a 10% emulsion in ordinary water suspension, has proved its worth in the treatment of 150 thousand sheep against parasitic worms. Not a single case of poisoning was noted.

270173

APPROVED FOR RELEASE: 03/14/2001 CIA-RDP86-00513R001861010007-7"

"APPROVED FOR RELEASE: 03/14/2001 CIA-RDP86-00513R001861010007-7

VORONTSOV, S. A.
Min Agriculture USSR. All-Union Inst of Helminthology imeni Academician K.I. Skryabin (VIGIS).

VORONTSOV, S. A.- "The therapeutic and prophylactic effect of phenothiazine in ascaridosis and heterakidosis of hens and chicks." Min Agriculture USSR. All-Union Inst of Helminthology imeni Academician K. I. Skryabin (VIGIS). Moscow, 1956. (Dissertation for the Degree of Candidate in Veterinary Sciences)

SO: Knizhnaya Letopis' No. 20, 1956

APPROVED FOR RELEASE: 03/14/2001 CIA-RDP86-00513R001861010007-7"

"APPROVED FOR RELEASE: 03/14/2001 CIA-RDP86-00513R001861010007-7

VORONTSOV, S. A. (Candidate of Veterinary Sciences, Voronezh NIVS)

"Echinoriosis of ducks"

Veterinariya, vol. 39, No. 7, July 1962 p. 52

APPROVED FOR RELEASE: 03/14/2001 CIA-RDP86-00513R001861010007-7"

"APPROVED FOR RELEASE: 03/14/2001 CIA-RDP86-00513R001861010007-7

VORONTSOV, S.A., kand. veterin. nauk

Echinuria infestation in ducks. Veterinariia 39 no.7:52-53 Jl '62. (MIRA 18:1)

1. Voronezhskaya nauchno-issledovatel'skaya veterinarnaya stantsiya.

APPROVED FOR RELEASE: 03/14/2001 CIA-RDP86-00513R001861010007-7"

"APPROVED FOR RELEASE: 03/14/2001 CIA-RDP86-00513R001861010007-7

L 4235-66 EWT(m)/EPA(w)-2/EWA(m)-2 IJP(c) GS

ACCESSION NR: AT5007977 S/0000/64/000/000/1056/1060 47 43 B+

AUTHOR: Belovintsev, K. A.; Belyak, A. Ya.; Vorontsov, S. B.; Cherenkov, P. A.

TITLE: Strong-current microtron-injector 19

SOURCE: International Conference on High Energy Accelerators. Dubna, 1963. Trudy. Moscow, Atomizdat, 1964, 1056-1060

TOPIC TAGS: low energy accelerator, magnetron, electron beam

ABSTRACT: By analyzing the characteristics of various low-energy accelerators (Van-de-Graaf generator, cascade generator, pulse transformer, microtron, linear accelerator, etc.) from the viewpoint of their utilization as an injector for the synchrotron, the authors found the application of the microtron for this purpose very promising. The determining motives of their selection were the simplicity of design and construction, high monoenergetic character, good geometric beam parameters, ease of output of a large part of the accelerated electrons, and compactness of this accelerator. In order to experimentally verify the theoretical assumptions, and also to study new possibilities, mainly concerned with the enhancement of the intensity, a 7-Mev microtron was erected and put into operation (October 1961) in the Photomeson Processes Laboratory, Physics Institute im. P. N.

Card 1/3

APPROVED FOR RELEASE: 03/14/2001 CIA-RDP86-00513R001861010007-7"

"APPROVED FOR RELEASE: 03/14/2001 CIA-RDP86-00513R001861010007-7

L 4235-66

ACCESSION NR: AT5007977

D

Lebedev, Academy of Sciences SSSR. The present report discusses the principal characteristics of the microtron. This accelerator was described in detail in another work (Belovintsev, K. A., Belyak, A. Ya., Gromov, A. N., Moroz, Ye. H., Cherenkov, P. A. *Atomnaya energiya* 14, 359 (1963)). The magnet of the microtron (total weight of the iron and windings--2 tons) ensures the creation of homogeneous (not worse than 0.3%) field in the circular region 50 cm in diameter for a gap of 12 cm between the pole terminals 60 cm in diameter. The maximum value of the homogeneous field in the gap is 4000 oersteds. The magnet's power supply is stabilized with an accuracy of 0.05%, and the power consumed in the operational state (around 1000 oersteds) amounts to 450 watts. The magnet poles are the covering of the vacuum chamber, realized in the form of a brass ring with nine soldered outlet pipes. The vacuum exhaust system consists of a mechanical fore-vacuum and para-oil pumps. A vacuum of 10^{-6} mm of mercury in the chamber's working volume is reached in 1.3 hours after it is attached. The microtron high-frequency system includes the following elements: (a) magnetron generator of 10 cm range operating in the pulse state at a frequency of repetition 50 or 100 hertz and pulse duration of 3 microseconds; (b) waveguide track with cross-section 72 × 44 mm operating in the fundamental wave mode H_{01}; (c) plane cylindrical resonator in which oscillations of

Card 2/3

APPROVED FOR RELEASE: 03/14/2001 CIA-RDP86-00513R001861010007-7"

"APPROVED FOR RELEASE: 03/14/2001 CIA-RDP86-00513R001861010007-7

L 4235-66
ACCESSION NR: AT5007977

4

the type E_{010} are excited (Kapitsa, S. P.; Bykov, V. P.; Melekhin, V. N. *ZhETF* 41, 368 1961)). Works on the study and improvement of the characteristics of the microtron as a strong-current injector are continuing. Especially interesting is the study of the possibility of the microtron as an injector of positrons for various storage devices (Belovintsev, K. A.; Denisov, F. P. *Atomnaya energiya* (in print)). "In conclusion the authors thank their associates at the Photomeson Laboratory, A. M. Gromov, A. V. Borisov, and V. S. Malofeyev, for their participation in the individual experiments and developments." Orig. art. has: 5 figures.

ASSOCIATION: Fizicheskiy institut imeni P. N. Lebedeva AN SSSR (Physics Institute, AN SSSR)

SUBMITTED: 26May64 ENCL: 00 SUB CODE: NP

NO REF SOV: 004 OTHER: 000

Card 3/3

APPROVED FOR RELEASE: 03/14/2001 CIA-RDP86-00513R001861010007-7"

"APPROVED FOR RELEASE: 03/14/2001 CIA-RDP86-00513R001861010007-7

VLASOV, Aleksey Andreyevich; GREBENSHCHIKOV, R.A., inzh., retsenzent; VORONTSOV, S.D., inzh., red.; KAN, P.M., red.izd-va; BODROVA, V.A., tekhn. red.

[Vater-jet propelled river vessels] Rechnye vodometnye suda. Moskva, Izd-vo "Rechnoi transport," 1962. 156 p. (MIRA 15:5)
(Inladn navigation) (Water jet)

APPROVED FOR RELEASE: 03/14/2001 CIA-RDP86-00513R001861010007-7"

"APPROVED FOR RELEASE: 03/14/2001 CIA-RDP86-00513R001861010007-7

VORONTSOV, S.I.

Planning and cost accounting in repair shops. Khim.prom no.8:495-498 D '56. (MIRA 10:1)

1. Dorogomilovskiy khimicheskiy zavod.
(Chemical plants)

APPROVED FOR RELEASE: 03/14/2001 CIA-RDP86-00513R001861010007-7"

"APPROVED FOR RELEASE: 03/14/2001 CIA-RDP86-00513R001861010007-7

VORONTSOV, S.M., polkovnik veterinarnoy sluzhby v otstavke, doktor veter. nauk

Antiepizootic measures in the Soviet Army. Veterinariia 42 no.5:9-10 My '65. (MIRA 18:6)

APPROVED FOR RELEASE: 03/14/2001 CIA-RDP86-00513R001861010007-7"

"APPROVED FOR RELEASE: 03/14/2001 CIA-RDP86-00513R001861010007-7

VORONTSOV S.M.

ALICHKIN, S.L.; AGRINSKIY, N.I.; ANDREYEV, G.F.; BAKUMENKO, G.D.; VORONTSOV, S.M.; VOYSTRIKOV, I.V.; GRADYUSHKO, G.M.; ZYKOV, A.V. IVANOVTSEV, P.V.; KINBURG, M.Ya.; KOVALEV, P.A.; KOZLOVSKIY, Ye.V. KORNIYENKO, A.P.; KOLYAKOV, Ya.Ye.; LAKTIONOV, A.M.; LEVADNYY, B.A. MEDVEDEV, I.D.; NOVIKOV, N.V.; ORLOV, F.M.; OSTROVSKIY, A.A.; ORTSEV, V.P.; PENIONZHKO, A.M.; POLOZ, D.D.; PRITULIN, P.I.; PETUKHOVSKIY, A.A.; ROGALEV, G.T.; RYBAK, P.Ya.; SUTYAGIN, G.P. TUKOV, R.A.; KHAVCHENKO, D.F.; CHERNETSKIY, T.I.; SHPAYER, N.M. SHUSTOVSKIY, F.A.

Nikolai Vasil'evich Spesivtsev. Veterinariia 35 no.2:96 F '58. (MIRA 11:2)

(Spesivtsev, Nikolai Vasil'evich, 1901-1957)

APPROVED FOR RELEASE: 03/14/2001 CIA-RDP86-00513R001861010007-7"

"APPROVED FOR RELEASE: 03/14/2001 CIA-RDP86-00513R001861010007-7

VORONTSOV, S.M.

VORONTSOV, Sergey Mikhaylovich; BLINDER, Ye.N., redaktor; LOMILINA, L.N. tekhnicheskiy redaktor.

[Financial planning in industrial cooperatives] Finansovoe planirovanie v promyslovoi kooperatsii. 3-e izd. Moskva, Vses. kooperativnoe izd-vo, 1955. 177 p. (MLRA 8:11)
(Finance) (Cooperative societies)

APPROVED FOR RELEASE: 03/14/2001 CIA-RDP86-00513R001861010007-7"

"APPROVED FOR RELEASE: 03/14/2001 CIA-RDP86-00513R001861010007-7

VORONTSOV, S.N.

VORONTSOV, S.N., inzh.

Methods for heat calculation of drying chambers. Vest.elektroprom. 28 no.8:60-62 Ag '57. (MIRA 10:10)

1.Vsesoyuznyy elektrotekhnicheskiy institut.
(Drying apparatus)

APPROVED FOR RELEASE: 03/14/2001 CIA-RDP86-00513R001861010007-7"

"APPROVED FOR RELEASE: 03/14/2001 CIA-RDP86-00513R001861010007-7

VORONTSOV, S.P. and MAYOROV, S.A.

Instrument Ball Bearings. Oborongiz (1951)

APPROVED FOR RELEASE: 03/14/2001 CIA-RDP86-00513R001861010007-7"

"APPROVED FOR RELEASE: 03/14/2001 CIA-RDP86-00513R001861010007-7

BRYUNETKIN, M.G.; VORONTSOV, S.P.

Increasing the durability of open-hearth furnace roofs. Metallurg 10 no.1:18-19 Ja '65. (MIRA 18:4

1. Chelyabinskiy metallurgicheskiy zavod.

APPROVED FOR RELEASE: 03/14/2001 CIA-RDP86-00513R001861010007-7"

"APPROVED FOR RELEASE: 03/14/2001 CIA-RDP86-00513R001861010007-7

VORONTSOV, S.P.; BOROZINETS, N.A.

Unit for sorting and milling rubbles of chrome-magnesite bricks. Biul.tekh.-ekon.inform.Gos.nauch.-issl.inst.nauch.i tekh.inform. 18 no.1:61-62 Ja '65. (MIRA 18:4)

APPROVED FOR RELEASE: 03/14/2001 CIA-RDP86-00513R001861010007-7"

"APPROVED FOR RELEASE: 03/14/2001 CIA-RDP86-00513R001861010007-7

VORONTSOV, S.V.

Karelia paper industry workers strive for the acceleration of technological progress. Bum.prom. 36 no.3:5-6 Mr '61. (MIRA 14:4)

1. Predsedatel' Karel'skogo sovnarkhoza.
(Karelia--Paper industry)

APPROVED FOR RELEASE: 03/14/2001 CIA-RDP86-00513R001861010007-7"

"APPROVED FOR RELEASE: 03/14/2001 CIA-RDP86-00513R001861010007-7

VORONTSOV, V.

Students started practical training. NTO no.12:38-39 D '59 (MIRA 13:3)

1. Predsedatel' soveta Nauchno-tekhnicheskogo obshchestva Podol'skogo mekhanicheskogo zavoda.
(Podol'sk--Education, Cooperative)

APPROVED FOR RELEASE: 03/14/2001 CIA-RDP86-00513R001861010007-7"

"APPROVED FOR RELEASE: 03/14/2001 CIA-RDP86-00513R001861010007-7

VORONTSOV, V.E.

Biokhimiia chaia (Biochemistry of tea). Moskva, Pishchepromizdat, 1946. 278 p.

SO: Monthly List of Russian Accessions, Vol 7, No 9, Dec 1954

APPROVED FOR RELEASE: 03/14/2001 CIA-RDP86-00513R001861010007-7"

"APPROVED FOR RELEASE: 03/14/2001 CIA-RDP86-00513R001861010007-7

C-A

Cultivation of pink geranium and production of geranium oil in the Soviet Union. V. E. Yorontsov. *Bull. Applied Botany, Genetics Plant Breeding* (U. S. S. R.), Suppl. 77, 7-124(1936).—Field expts. showed that pink geranium, *Pelargonium roseum* Willd., can be successfully cultivated in the Caucasus as an annual plant. It is a hybrid form closely related to *P. graveolens* and *P. radula*, contg. 0.1-0.125% geranium oil. The oil compares favorably with the best foreign products and contains considerable *l*-citronellol. The phys. and chem. properties of oil obtained from various plantations are given and its use in the perfume and cosmetics industries and as a source for the production of synthetic products (rhodinol) are discussed. The distribution of *Pelargonium* genus and the cultivation of its numerous varieties throughout the world, the methods of extn. of geranium oil and its properties in relation to the geographic origin and climatic conditions, the com. practice of adulteration and numerous other features of the oil industry are discussed at great length. Extensive bibliography. Chas. Blanc

ASM-SLA METALLURGICAL LITERATURE CLASSIFICATION

APPROVED FOR RELEASE: 03/14/2001 CIA-RDP86-00513R001861010007-7"

"APPROVED FOR RELEASE: 03/14/2001 CIA-RDP86-00513R001861010007-7

NIKITINA, A.P.; KOROLEV, Yu.M.; VORONTSOV, V.G.

Palygorskite and saponite from the weathering surface of the Kursk Magnetic Anomaly. Kora vyvetr. no.6:48-54 '63. (MIRA 17:9)

1. Institut geologii rudnykh mestorozhdeniy, petrografii, mineralogii i geokhimii AN SSSR, Moskva (for Nikitina). 2. Institut geologii i razrabotki goryuchikh iskopayemykh AN SSSR, Moskva.(for Korolev). 3. Nauchno-issledovatel'skiy institut stroitel'nogo osusheniya, Belgorod (for Vorontsov).

APPROVED FOR RELEASE: 03/14/2001 CIA-RDP86-00513R001861010007-7"

"APPROVED FOR RELEASE: 03/14/2001 CIA-RDP86-00513R001861010007-7

BROVKO, Aleksey Petrovich; VORONISOV, V.G., retsenzent; YEGOROVA V.Ye., retsenzent; ZAKHAROV, A.P., retsenzent; KROPACHEV, V.P., retsenzent; PASTUKHOV, N.V., retsenzent; PEREGUDOV, V.V., retsenzent; PONOMAREV, V.A., retsenzent; RUDEV, A.M., retsenzent; KHROPUNSKIY, Ye.A., retsenzent; SMIRNOV, A.A., inzh., retsenzent

[Contact networks in strip mines] Kontaktnaia set' na kar'erakh. Moskva, Nedra, 1964. 207 p. (MIRA 18:2)

1. Inzhenerno-tekhnicheskiye rabotniki Korkinskogo tresta ugol'nykh predpriyatiy (for all except Brovko).

APPROVED FOR RELEASE: 03/14/2001 CIA-RDP86-00513R001861010007-7"

"APPROVED FOR RELEASE: 03/14/2001 CIA-RDP86-00513R001861010007-7

ACC NR: AP7001217 SOURCE CODE: UR/0141/66/009/006/1155/1163

AUTHOR: Deryugin, I. A.; Vorontsov, V. I.

ORG: Kiev State University (Kiyevskiy gosudarstvennyy universitet)

TITLE: Quadratic relationships in electrodynamics of moving media

SOURCE: IVUZ. Radiofizika, v. 9, no. 6, 1966, 1155-1163

TOPIC TAGS: electrodynamics, moving medium, perturbatiol method, quadratic relationship, resonator, waveguide

ABSTRACT: A generalization is given of well known quadratic relationships of macroscopic electrodynamics (generalized Umov-Poynting's theorem, Lorentz lemma and lemmas for the complex conjugate values) for the electrodynamics of moving generalized gyrotropic media. Reciprocity principle is correlated with the fundamental operations of space-time inversion, charge and complex conjugations and their combinations. The classification is given for the reciprocity types of moving material media in accordance with the types of symmetry. It was shown that the application of quadratic relationships in electrodynamics of moving media

UDC: 538.3

Card 1/2

APPROVED FOR RELEASE: 03/14/2001 CIA-RDP86-00513R001861010007-7"

"APPROVED FOR RELEASE: 03/14/2001 CIA-RDP86-00513R001861010007-7

ACC NR: AP7001217

lead to a derivation of basic formulas for the calculation of changes of waveguides and resonators based on the perturbation method. Orig. art. has: 35 formulas. [Authors' abstract]

[AM]

SUB CODE: 09, 20/SUBM DATE: 29May65/ORIG REF: 011/OTH REF: 001/

Card 2/2

APPROVED FOR RELEASE: 03/14/2001 CIA-RDP86-00513R001861010007-7"

"APPROVED FOR RELEASE: 03/14/2001 CIA-RDP86-00513R001861010007-7

L 7983-66

ACC NR: AP5026486 SOURCE CODE: UR/0286/65/000/019/0012/0012

AUTHORS: Mitrofanov, A. I.; Vorontsov, V. I.; Gordon, A. B.

ORG: none

TITLE: A method for obtaining a filter. Class 12, No. 175035 [announced by Scientific Research, Design, and Construction Institute for Draining the Deposits of Natural Resources (Nauchno-issledovatel'skiy i proyektno-konstruktorskiy institut po osusheniyu mestorozhdeniy poleznykh iskopayemykh)]

SOURCE: Byulleten' izobreteniy i tovarnykh znakov, no. 19, 1965, 12

TOPIC TAGS: epoxy, glass fabric, filter

ABSTRACT: This Author Certificate presents a method for obtaining filters from glass fabric by saturating it with a composition based on epoxy resin. To obtain the necessary porosity (permeability) in the filter, the saturated glass fabric is blown through with hot compressed air before the composition hardens.

SUB CODE: IE/ SUBM DATE: 04Jul64

Card 1/1 UDC: 66.067.322

APPROVED FOR RELEASE: 03/14/2001 CIA-RDP86-00513R001861010007-7"

"APPROVED FOR RELEASE: 03/14/2001 CIA-RDP86-00513R001861010007-7

L 5276-66 EWT(1) IJP(c) GS

ACCESSION NR: AT5024191 UR/0000/65/000/000/0068/0080

44,55 44,55 21,44,55

AUTHORS: Deryugin, I. A.; Vorontsov, V. I.

TITLE: The propagation of electromagnetic waves in a moving gyrotropic medium

SOURCE: AN UkrSSR. Fizika komet i meteorov (Physics of comets and meteors). Kiev, Izd-vo Naukova dumka, 1965, 68-80

TOPIC TAGS: electromagnetic wave phenomenon, plasma electromagnetic wave, Maxwell equation, Lorentz transformation, plasma wave propagation, plasma electromagnetic wave

ABSTRACT: A theory is proposed on the propagation of plane nonuniform electromagnetic waves in a moving gyrotropic medium in the general case when the medium moves along a constant magnetic field. A six-dimensional bivector space is used. Notation of the six-dimensional permeability tensors in terms of 4 sets of three-dimensional tensors allows the material equations of moving gyrotropic media to be represented as four vector equations:

$$\overline{D} = -(M)\overline{E} + i\beta(N)\overline{B},$$

$$\overline{H} = i\beta(N)\overline{E} + (\check{M})\overline{B},$$

Card 1/3

0901053?

APPROVED FOR RELEASE: 03/14/2001 CIA-RDP86-00513R001861010007-7"

"APPROVED FOR RELEASE: 03/14/2001 CIA-RDP86-00513R001861010007-7

L 5276-66

ACCESSION NR: AT5024191

$$\vec{E} = -(\overline{M})\vec{D} + i\beta(\check{\overline{N}})\overline{H},$$

$$\overline{B} = i\beta(\check{\overline{N}})\vec{D} + (\check{\overline{M}})\overline{H}.$$

The equation of the normals for longitudinally moving gyrotropic media is

$$\frac{\zeta_1^4\gamma^4}{\varepsilon_\perp\mu_\perp}(1-\beta^2\mu\varepsilon_\perp)(1-\beta^2\varepsilon\mu_\perp) - \frac{1}{4}\frac{\zeta_1^4\beta^2\gamma^8}{\varepsilon_\perp\mu_\perp}(1-\beta\zeta_3)^2(\varepsilon_+\mu_+-\varepsilon\mu_-)^2 -$$
$$-\frac{\zeta_1^2\gamma^2}{2}\left(\frac{\mu_1}{\mu_+}+\frac{\varepsilon_1}{\varepsilon_+}\right)(1-\beta^2\varepsilon_+\mu_+)\times$$
$$\times\left\{1-\frac{\gamma^4}{\varepsilon_-\mu_-}[\zeta_3(1-\beta^2\varepsilon_-\mu_-)+\beta(\varepsilon_-\mu_--1)]^2\right\} -$$
$$-\frac{\zeta_1^2\gamma^2}{2}\left(\frac{\mu_1}{\mu_-}+\frac{\varepsilon_1}{\varepsilon_-}\right)(1-\beta^2\varepsilon_-\mu_-)\times$$
$$\times\left\{\frac{\gamma^4}{\varepsilon_+\mu_+}[\zeta_3(1-\beta^2\varepsilon_+\mu_+)+\beta(\varepsilon_+\mu_+-1)]^2\right\} +$$
$$+\varepsilon_1\mu_1\left\{1-\frac{\gamma^4}{\varepsilon_+\mu_+}[\zeta_3(1-\beta^2\varepsilon_+\mu_+)+\beta(\varepsilon_+\mu_+-1)]^2\right\}\times$$
$$\times\left\{1-\frac{\gamma^4}{\varepsilon_-\mu_-}[\zeta_3(1-\beta^2\varepsilon_-\mu_-)+\beta(\varepsilon_-\mu_--1)]^2\right\}=0.$$

Card 2/3

APPROVED FOR RELEASE: 03/14/2001 CIA-RDP86-00513R001861010007-7"

"APPROVED FOR RELEASE: 03/14/2001 CIA-RDP86-00513R001861010007-7

L 5276-66
ACCESSION NR: AT5024191

3

When an electromagnetic wave is propagated at an arbitrary angle to the longitudinal axis, it can be expanded into normal waves TEM, TM, or TE. Solution of the linear equations of an alternating magnetic field for a longitudinally moving gyrotropic medium indicates that circularly polarized waves TEM, TM, and TE are normal. Orig. art. has: 1 diagram and 59 formulas.

ASSOCIATION: GAOANUK 44,55

SUBMITTED: 21May65 ENCL: 00 SUB CODE: ME

NO REF SOV: 004 OTHER: 000

BC

Card 3/3

APPROVED FOR RELEASE: 03/14/2001 CIA-RDP86-00513R001861010007-7"

"APPROVED FOR RELEASE: 03/14/2001 CIA-RDP86-00513R001861010007-7

VORONTSOV, V.I.

Utilizing the engineering experience of students in physics classes. Fiz.v shkole 20 no.1:89-90 Ja-F '60. (MIRA 14:10)

1. 1-ya shkola rabochey molodezhi, g. Yelets.
(Physics--Study and teaching)

APPROVED FOR RELEASE: 03/14/2001 CIA-RDP86-00513R001861010007-7"

"APPROVED FOR RELEASE: 03/14/2001 CIA-RDP86-00513R001861010007-7

L 14368-63 EWT(1)/BDS AFFTC/ASD/ESL-3 IJP(C)
ACCESSION NR: AP3001824 P/0045/63/023/005/0655/0656

56
55

AUTHOR: Levashev, A. E.; Vorontsov, V. I.

TITLE: The orientability of the physical tetrad in relativistic electrodynamics

SOURCE: Acta physica polonica, v. 23, no. 5, 1963, 655-656

TOPIC TAGS: physical tetrad, relativistic electrodynamics, covariance, covariant transformation, fictitious magnetic current, fictitious magnetic charge

ABSTRACT: The covariance of the equations of electrodynamics in the presence of free charges and currents, with respect to dual transformations, can be regarded as a corollary of the orientability of the physical tetrad. The authors conclude that their 8 equations are obviously covariant not only under the Lorentz' transformations, but also under dual transformations. Thus, alongside of the electric charges and currents expressed by the four-dimensional vector j sup m which defines the vector e sub o of the physical tetrad, there must exist the physical quantity j sub lmn in the case of the supposed influence of space-time orientability on electric processes. Conversely, as soon as this

Card 1/2

APPROVED FOR RELEASE: 03/14/2001 CIA-RDP86-00513R001861010007-7"

"APPROVED FOR RELEASE: 03/14/2001 CIA-RDP86-00513R001861010007-7

L 14368-63

ACCESSION NR: AP3001824

physical quantity is experimentally established, this fact can serve as an argument in favor of the orientability of the physical tetrad.

Orig. has 8 numbered equations.

ASSOCIATION: Belorussian State University, Minsk, Belorussian SSR

SUBMITTED: 16Aug62 DATE ACQ: 01Jul63 ENCL: 00

SUB CODE: MM, GE NO REF SOV: 003 OTHER: 001

Card 2/2

APPROVED FOR RELEASE: 03/14/2001 CIA-RDP86-00513R001861010007-7"

"APPROVED FOR RELEASE: 03/14/2001 CIA-RDP86-00513R001861010007-7

S/250/63/007/002/003/008
A059/A126

AUTHORS: Levashev, A. Ye., Vorontsov, V. I.

TITLE: "Magnetic charges" and the dual covariance of the equations of electrodynamics

PERIODICAL: Doklady Akademii nauk BSSR, v. 7, no. 2, 1963, 83 - 86

TEXT: As has been previously shown, a dissymmetry of the electron in excess of $m:\alpha$ must lead to interactions lower by α^2 times as compared to the classical one, where α is the constant of the fine structure, the dissymmetry of the classical electron being $m \cdot \alpha/\alpha$. The increased dissymmetry $\underline{m}:\alpha$ can be ascribed to the appearance of the trivector $3!\, e^{[\lambda} e^{\mu} e^{\nu]}$ where $\underline{m}$ is the area of antisymmetry. Thus, the problem of examining the electrodynamics appears which considers the possibility of a dissymmetry of electric charges. An arbitrary contravariant tensor $a^{\mu_1 \cdots \mu_m}$ is transformed to some of its dual tensors:

$$\hat{a}_{\lambda_1 \cdots \lambda_{4-m}} = \frac{1}{m!} \varepsilon_{[\lambda_1 \cdots \lambda_{4-m} \mu_1 \cdots \mu_m]} a^{\mu_1 \cdots \mu_m}, \qquad (2.3)$$

Card 1/3

APPROVED FOR RELEASE: 03/14/2001 CIA-RDP86-00513R001861010007-7"

"APPROVED FOR RELEASE: 03/14/2001 CIA-RDP86-00513R001861010007-7

where $\varepsilon_{[\lambda_1 \ldots \lambda_4]}$ is some tetravector. Finally, the field equation

$$\frac{\partial L}{\partial a_{\mu}^{-}} - \nabla_{\nu} \frac{\partial L}{\partial \nabla_{[\mu} a_{\nu]}^{-}} = 0 \qquad (2.11)$$

is obtained, where a_{μ}^{-} is the potential corresponding to the Lagrangian introduced. Thus, together with the electric charges and currents expressed by the tetradimensional vector j^{μ}, the physical value $j_{[\lambda\mu\nu]}$ with the symmetry $\underline{m}:\infty$ should exist in the case of the assumed influence of the orientability of space-time on the electromagnetic processes and, consequently, of the covariance with respect to the dual transformations (2.3). The component $j_{[lmn]}$ where lmn = 1, 2, 3 corresponds to what is usually termed magnetic charge, with the spherical symmetry $j_{[lm0]}$ reserved by the magnetic current. If the electric charge and current distribution is such that it possesses the dissymmetry $\underline{m}:\infty$ the trivector $j_{[\lambda\mu\nu]}$ appears in electrodynamics and corresponds to the "magnetic" charges and currents. In particular, it can be shown that the dissymmetry $\underline{m}:\infty$ appears in the bremsstrahlung of electric systems having the symmetry $m:\infty$. A. V. Shubnikov and A. A. Pistol'kors are mentioned.

APPROVED FOR RELEASE: 03/14/2001 CIA-RDP86-00513R001861010007-7"

"APPROVED FOR RELEASE: 03/14/2001 CIA-RDP86-00513R001861010007-7

S/250/63/007/002/003/008
A059/A126

"Magnetic charges" and the...

ASSOCIATION: Belorusskiy gosudarstvennyy universitet im. V. I. Lenina (Belorussian State University imeni V. I. Lenin)

PRESENTED: by B. I. Stepanov, academician of the AS BSSR

SUBMITTED: June 18, 1962

Card 3/3

APPROVED FOR RELEASE: 03/14/2001 CIA-RDP86-00513R001861010007-7"

"APPROVED FOR RELEASE: 03/14/2001 CIA-RDP86-00513R001861010007-7

ACC NR: AP7002590 (A, N) SOURCE CODE: UR/0413/66/000/023/0090/0090

INVENTORS: Polukhin, P. I.; Golubchik, R. M.; Milennyy, K. F.; Vorontsov, V. K.

ORG: none

TITLE: An assembly for determining optically the stress-strain state of rollers and products in the process of rolling. Class 42, No. 189202

SOURCE: Izobretaniya, promyshlennyye obraztsy, tovarnnyye znaki, no. 23, 1966, 90

TOPIC TAGS: rolling mill, metal rolling, optic method, optic instrument, optic image, optic system, metal stress, strain, light reflection, light transmission

ABSTRACT: This Author Certificate presents an assembly for determining optically the stress-strain state of rollers and products in the process of rolling. The assembly contains a rolling mill with a base which carries driving working rollers with reducers and clamps, and also an optical assembly for either reflected or transmitted light (see Fig. 1). To produce a transverse rolling process involving two, three, or four rollers, and to produce a longitudinal rolling process involving two rollers, the rolling mill is supplied with demountable idler rollers (bars). The base is provided with openings for holding idler and working rollers in various combinations. To obtain a clear image of stresses and to shorten the length of the mill while working with equipment for the transmitted light or with interferometers, directing devices are fixed in the openings of the base. Yokes with working rollers

UDC: 620.1.05:539.388.22

0930 2706

Card 1/2

APPROVED FOR RELEASE: 03/14/2001 CIA-RDP86-00513R001861010007-7"

"APPROVED FOR RELEASE: 03/14/2001 CIA-RDP86-00513R001861010007-7

ACC NR: AP7002590

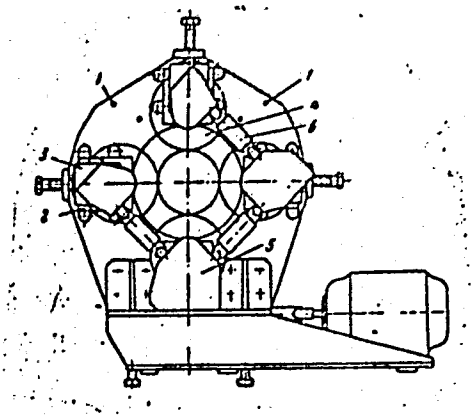

Fig. 1. 1 - openings in the base; 2 - directing devices; 3 - yoke; 4 - working roller; 5 - reducer; 6 - hinged telescopic clutch

placed on brackets and carrying reducers or idle rollers (bars) are mounted in these directing devices. To produce a progressive motion of the turning rollers which compress a turning product, a telescopic hinged clutch is placed between the driving engine and the reducer of each roller. Orig. art. has: 1 figure.

SUB CODE: 13/ SUBM DATE: 20Jan65

Card 2/2

APPROVED FOR RELEASE: 03/14/2001 CIA-RDP86-00513R001861010007-7"

"APPROVED FOR RELEASE: 03/14/2001 CIA-RDP86-00513R001861010007-7

ACC NR: AT7002108 (N) SOURCE CODE: UR/0000/66/000/000/0223/0234

AUTHOR: Vorontsov, V. K.; Polukhin, P. I.

ORG: none

TITLE: The use of the photosensitive coating method for studying plastic deformation processes in metals

SOURCE: Vsesoyuznaya konferentsiya po polyarizatsionno-opticheskomu metodu issledovaniya napryazheniy. 5th, Leningrad, 1964. Polyarizatsionno-opticheskiy metod issledovaniya napryazheniy (Polarizing-optical method of investigating stresses); trudy konferentsii. Leningrad, Izd-vo Leningr. univ., 1966, 223-234

TOPIC TAGS: photosensitivity, plastic coating, plastic deformation, stress analysis, metal pressing, metal rolling, metal forging

ABSTRACT: Optically sensitive coatings and shapes were used to study the plastic deformation of metals in rolling and forging. Four different coatings and their properties were given for studying maximum deformations of 20%. These had the following compositions: (1) 25 g saturated polyether and 15 g maleic anhydride, (2) 25 g saturated polyether and 4 g polyethylene polyamide, (3) 50 g saturated polyether and 15 g maleic anhydride, and (4) 40 g unsaturated polyether and 15 g phtaleic anhydride. The optical sensitivity of these coatings $\beta = m/\varepsilon t$ ranged from 30 to 35 1/mm, where m is

Card 1/2

APPROVED FOR RELEASE: 03/14/2001 CIA-RDP86-00513R001861010007-7"

"APPROVED FOR RELEASE: 03/14/2001 CIA-RDP86-00513R001861010007-7

ACC NR: AT7002108

the order of the isochrome, ε is the relative deformation, and t is the coating thickness. Two methods of studying pressure deformation in metals were used: coating of the lateral sides of samples before deformation, and cementing optically sensitive materials inside of samples. For example, the upsetting of a lead ring of 100 mm diameter on a mandrel was studied by coating the face of the ring and plastically deforming it. Isochromatic and isoclinic lines were observed and the stress state throughout the ring deduced. Parameters in the rolling process were also analyzed by coating the sides of aluminum slabs of varying dimensions. The roll diameters ranged from 135 to 190 mm. Photographs were shown of the stress patterns developed in the coatings by rolling, and isobars were outlined in a schematic drawing indicating the magnitudes of σ_x, σ_y, and τ_{xy} in the deformation zone. The punching process was studied on composite samples of lead glued to photosensitive pieces of plastic. The glued junctions were made along vertical and horizontal planes of symmetry. Photographs were shown of the isoclinic and isochromic lines resulting from 20% punch deformation. The above techniques could be used to obtain the stress distribution in the plastic flow region for given boundary conditions. Orig. art. has: 7 figures, 2 tables.

SUB CODE: 13,11,20/ SUBM DATE: 14Jun66/ ORIG REF: 002

Card 2/2

APPROVED FOR RELEASE: 03/14/2001 CIA-RDP86-00513R001861010007-7"

"APPROVED FOR RELEASE: 03/14/2001 CIA-RDP86-00513R001861010007-7

L 17415-66 EWT(m)/EWA(d)/EWP(t) JD/HW

ACCESSION NR: AP5013676 SOURCE CODE: UR/0182/65/000/005/0001/0005

AUTHOR: Polukhin, P.I.; Teterin, P.K.; Luk'yanov, V.P.; Vorontsov, V.K.; Kartoshkin, A.A.

ORG: none

TITLE: Stress deformation state in rolling circular blanks

SOURCE: Kuznechno-shtampovochnoye proizvodstvo, no. 5, 1965, 1-5

TOPIC TAGS: stress analysis, strain, material deformation, circular forging, circular blank, blank, reduction, tensile stress, applied load, load, mandrel diameter effect, ram form effect, reduction degree effect

ABSTRACT: This study was carried out because there is an increasing need of circular forgings from difficultly deforming stainless and heat resistant steels and alloys. The stress deformation state of the metal in the area of deformation during the rolling of the circular blanks on a mandrel was investigated with respect to the form of the working surface of the ram (plane, concave, and convex), diameter of the mendrel, and degree of reduction. The experimental results show

Card 1/2

APPROVED FOR RELEASE: 03/14/2001 CIA-RDP86-00513R001861010007-7"

"APPROVED FOR RELEASE: 03/14/2001 CIA-RDP86-00513R001861010007-7

L 17415-66

ACCESSION NR: AP5013676

that 1) the process of reduction of circular blanks on a mandrel is accompanied by the occurrence of tensile stress in the deformation area perpendicular to the applied load, 2) the tensile stress and the zone it affects in the deformation area markedly decrease with increase in the degree of reduction, and 3) an increase in the mandrel diameter and application of a concave ram tends to decrease the area of action of the tensile stress as well as of its absolute value. Orig. art. has: 4 formulas, 5 figures, and 3 tables.

SUB CODE: 13,11 SUBM DATE: 00 ORIG REF: 004 OTH REF: 000

Card 2/2 nst

APPROVED FOR RELEASE: 03/14/2001 CIA-RDP86-00513R001861010007-7"

"APPROVED FOR RELEASE: 03/14/2001 CIA-RDP86-00513R001861010007-7

109100

41468

S/153/62/005/004/006/006
E075/E436

AUTHORS: Shchegolevskaya, N.A., Sokolov, S.I., Polukhin, P.I., Vorontsov, V.K.

TITLE: On the polymeric coatings on metals for the study of plastic deformations by the optical method

PERIODICAL: Izvestiya vysshikh uchebnykh zavedeniy. Khimiya i khimicheskaya tekhnologiya, v.5, no.4, 1962, 647-652

TEXT: A possibility was investigated of obtaining optically sensitive layers, based on epoxy resins and polyesters, suitable for the investigation of sufficiently large plastic deformations of metals. It was found that the coatings with different maximum deformations, optical sensitivity and adhesiveness can be produced from epoxy resins and various polyesters of dibasic acids and glycols, polyesteracrylates and dibutylphthalate as plasticizers. They could also be produced by changing the conditions of curing, both hot and cold curing processes being suitable. For hot curing, maleic and phthalic anhydrides are used as curing agents; for cold curing, polyethylenepolyamines. A method of gradual heating was employed to produce the coatings without any residual

Card 1/2

APPROVED FOR RELEASE: 03/14/2001 CIA-RDP86-00513R001861010007-7"

"APPROVED FOR RELEASE: 03/14/2001 CIA-RDP86-00513R001861010007-7

internal strains. The best results were obtained by heating to 100°C and subsequent cooling at the rate of 2°C per hour. The optical effect of the coatings was directly proportional to their deformations; this is expressed by $R_t = \alpha t(\varepsilon_1 - \varepsilon_2)$, where R_t - linear difference in displacement, α - optical coefficient of deformation, t - double thickness of polymer coating and ε_1 and ε_2 - the main deformations. The data obtained permit to choose appropriate resin composition and curing conditions in relation to maximum deformation produced (up to 30%). There are 3 figures and 1 table.

ASSOCIATION: Moskovskiy institut khimicheskogo mashinostroyeniya i Moskovskiy institut stali (Moscow Institute of Chemical Machinery and Moscow Steel Institute)

SUBMITTED: April 24, 1962

APPROVED FOR RELEASE: 03/14/2001 CIA-RDP86-00513R001861010007-7"

"APPROVED FOR RELEASE: 03/14/2001 CIA-RDP86-00513R001861010007-7

POLUKHIN, P. I., prof., doktor tekhn. nauk; VORONTSOV, V. K., inzh.

Use of optically active coatings in the study of processes occurring during the press-working of metals. Sbor. Inst. stali i splav. no.40:277-292 '62. (MIRA 16:1)

(Deformations(Mechanics)—Testing)
(Optical films)

APPROVED FOR RELEASE: 03/14/2001 CIA-RDP86-00513R001861010007-7"

"APPROVED FOR RELEASE: 03/14/2001 CIA-RDP86-00513R001861010007-7

S/148/63/000/001/006/019
E193/E383

AUTHORS: Polukhin, P.I., Vorontsov, V.K. and Rutman, G.G.

TITLE: Investigation of the stress and strain state in rolling. Part I

PERIODICAL: Izvestiya vysshikh uchebnykh zavedeniy, Chernaya metallurgiya, no. 1, 1963, 58 - 66

TEXT: The object of the present investigation was to study the distribution of strain and stress in the actual deflection region as a function of the geometric parameters of the rolling process. Strip specimens, 10-73 mm thick, were investigated on a laboratory, two-high stand with rolls 139 and 185 mm in diameter, the absolute reduction varying between 0.5 and 6.5 mm so that the ℓ_d/h_{sr} ratio covered ranged from 0.12 - 1.2 (ℓ_d is the length of the geometrical deformation zone, h_{sr} being the thickness of the strip). Stresses and strains were determined by using optically sensitive coatings and inserts, tensometric measurements and the coordinate-network method. The results were

Card 1/4

APPROVED FOR RELEASE: 03/14/2001 CIA-RDP86-00513R001861010007-7"

"APPROVED FOR RELEASE: 03/14/2001 CIA-RDP86-00513R001861010007-7

used to plot the isoclinic curves (θ = const, where θ is the angle of deflection and one of the principal strains) and curves representing $\varepsilon_1 - \varepsilon_2$ = const. The results of analysis of these curves can be summarized as follows: 1) rolling in the ℓ_d/h_{sr} range studied is characterized by nonuniform strain and stress distribution, this effect being particularly marked in the material entering the rolls; 2) as the ℓ_d/h_{sr} ratio increases, the degree of nonuniformity of strains normal to the direction of rolling in the metal leaving the rolls decreases and the character of flow of the metal entering the rolls changes; 3) three types of the stress-strain state can be distinguished, depending on the value of ℓ_d/h_{sr}: a) a most uniform distribution of stress and strain across the thickness of the strip in a large part of the geometrical deformation zone is attained at ℓ_d/h_{sr} = = 1.2, some degree of nonuniformity being observed in metal entering the rolls; the rolling process under these conditions is characterized by triaxial compression in the entire actual deformation zone with the exception of the region adjacent to the plane in the pre-deformation zone, which is not under external

APPROVED FOR RELEASE: 03/14/2001 CIA-RDP86-00513R001861010007-7"

"APPROVED FOR RELEASE: 03/14/2001 CIA-RDP86-00513R001861010007-7

load; b) at $0.3 < \ell_d/h_{sr} < 0.8$ deformation becomes less uniform; the state of triaxial compression does not extend to the central layer of the strip in the geometrical deformation zone and large tensile stresses are set up in the pre-deformation zone which - in the case of metal with a low margin of plasticity - can lead to fracture; c) at $\ell_d/h_{sr} < 0.3$, the metal is compressed throughout its entire thickness but there is a great difference between the strength in the surface and central layers of the strip; the stress state is characterized by high tensile stresses along the axis of symmetry, both in the pre-deformation region and in the geometrical deformation zone; a limited increase in the degree of uniformity of deformation across the thickness of the strip can be brought about by further decrease in ℓ_d/h_{sr}; 4) the strain-stress state across the width of the strip is both nonuniform and heterogeneous; 5) the length ℓ_a of the actual deformation zone depends on the value of ℓ_d/h_{sr}, the ℓ_a/ℓ_d ratio increasing from 1.5-2 at $\ell_d/h_{sr} \approx 1$ to 3-3.5 at $\ell_d/h_{sr} < 0.3$.

There are 3 figures.

APPROVED FOR RELEASE: 03/14/2001 CIA-RDP86-00513R001861010007-7"

"APPROVED FOR RELEASE: 03/14/2001 CIA-RDP86-00513R001861010007-7

Investigation of the stress S/148/63/000/001/006/019
E193/E383

ASSOCIATION: Moskovskiy institut stali i splavov (Moscow Institute of Steel and Alloys)

SUBMITTED: August 2, 1962

Card 4/4

APPROVED FOR RELEASE: 03/14/2001 CIA-RDP86-00513R001861010007-7"

"APPROVED FOR RELEASE: 03/14/2001 CIA-RDP86-00513R001861010007-7

L 15567-63 EWP(r)/EWT(d)/EWP(k)/EWP(q)/EWT(m)/BDS AFFTC/ASD

S/0126/63/015/006/...

AUTHORS: Polukhin, P. I.; Zheleznov, Yu. D.; Vorontsov, V. K.; Grigoryan, G. G.

TITLE: Application of optically sensitive coatings in the study of plastic deformation of polycrystalline materials

SOURCE: Fizika metallov i metallovedeniye, v. 15, no. 6, 1963, 927-929

TOPIC TAGS: polycrystalline material, coating, optical sensitivity, plastic deformation

ABSTRACT: The mechanism of grain deformation in polycrystalline solid bodies has been studied with the use of optically sensitive coatings of different optical and mechanical properties. Steel plates with grains up to 1.5 cm were coated with a plastic 1.5 mm thick on both sizes and were then analyzed in reflected polarized white light. The simultaneous deformation of the coating film and the sample surface makes it possible to evaluate qualitatively the distribution of deformation by the optic effect. The variation of the isochrome picture in the process of plastic elongation was photographed with a color motion-picture camera in order to study the progress of the process. The degree of deformation in

Card 1/2

APPROVED FOR RELEASE: 03/14/2001 CIA-RDP86-00513R001861010007-7"

"APPROVED FOR RELEASE: 03/14/2001 CIA-RDP86-00513R001861010007-7

L 15567-63

ACCESSION NR: AP3002853

separate grains and the degree of their yield to plastic deformation were evaluated according to the speed with which the color spectrum changed in the field of a grain. The results showed that in easily deformable grains the color change originates either in the middle of the grain and moves outward, or it originates at the periphery and moves toward the center. In the more resistant grains the color change was slow and uniform all over the field, becoming more rapid only in the last deformation stages near the grain boundaries. Orig. art. has: 2 figures.

ASSOCIATION: Moskovskiy institut stali i splavov (Moscow Institute of Steel and Alloys)

SUBMITTED: 21Aug62 DATE ACQ: 23Jul63 ENCL: 00

SUB CODE: ML, PH NO REF SOV: 003 OTHER: 000

Card 2/2

APPROVED FOR RELEASE: 03/14/2001 CIA-RDP86-00513R001861010007-7"

"APPROVED FOR RELEASE: 03/14/2001 CIA-RDP86-00513R001861010007-7

POLUKHIN, P.I.; VORONTSOV, V.K.; PRUDKOVSKIY, B.A.

Investigating by optical methods the transition stages of the rolling process. Izv. vys. ucheb. zav.; chern. met. 7 no.1:69-77 '64. (MIRA 17:2)

1. Moskovskiy institut stali i splavov.

APPROVED FOR RELEASE: 03/14/2001 CIA-RDP86-00513R001861010007-7"

"APPROVED FOR RELEASE: 03/14/2001 CIA-RDP86-00513R001861010007-7

POLUKHIN, P.I.; VORONTSOV, V.K.; Prinimal uchastiye Pravdin, A. V., inzh.

Investigating the stress condition in rolling high ingots. Izv. vys. ucheb. zav.; chern. met. 5 no.8:79-86 '62. (MIRA 15:9)

1. Moskovskiy institut stali i splavov.
(Rolling (Metalwork)) (Strains and stresses)

APPROVED FOR RELEASE: 03/14/2001 CIA-RDP86-00513R001861010007-7"

"APPROVED FOR RELEASE: 03/14/2001 CIA-RDP86-00513R001861010007-7

POLUKHIN, P.I.; VORONTSOV, V.K.

Determining the components of stressed and deformed conditions in the plastic range by optical test data. Izv.vys.ucheb.zav.; chern.met. 5 no.11:80-89 '62. (MIRA 15:12)

1. Moskovskiy institut stali i splavov.
(Deformations (Mechanics)—Testing)
(Optical measurements)

APPROVED FOR RELEASE: 03/14/2001 CIA-RDP86-00513R001861010007-7"

"APPROVED FOR RELEASE: 03/14/2001 CIA-RDP86-00513R001861010007-7

POLUKHIN, P.I.; VORONTSOV, V.K.; RUTMAN, G.G.

Investigating the stressed and deformed state during rolling. Report no. 2. Izv. vys. uchebb. zav.; chern. met. 6 no.3:85-91 '63. (MIRA 16:5)

1. Moskovskiy institut stali i splavov.
(Rolling (Metalwork)) (Strains and stresses)

APPROVED FOR RELEASE: 03/14/2001 CIA-RDP86-00513R001861010007-7"

"APPROVED FOR RELEASE: 03/14/2001 CIA-RDP86-00513R001861010007-7

POLUKHIN, P.I.; ZHELEZNOV, Yu.D.; VORONTSOV, V.K.; GRIGORYAN, G.G.

Using the method of optically sensitive coatings for the study of platic deformations in polycrystalline materials. Fiz. met. i metallovod. 15 no.6:927-929 Je '63. (MIRA 16:7)

1. Moskovskiy institut stali i splavov.
(Deformations mechanics) (Optical measurements)

APPROVED FOR RELEASE: 03/14/2001 CIA-RDP86-00513R001861010007-7"

"APPROVED FOR RELEASE: 03/14/2001 CIA-RDP86-00513R001861010007-7

POLUKHIN, P.I.; VORONTSOV, V.K.

Investigating conditions of stress and deformation during rolling. Izv. vys. ucheb. zav.; chern. met. 7 no.8:102-109 '64. (MIRA 17:9)

1. Moskovskiy institut stali i splavov.

APPROVED FOR RELEASE: 03/14/2001 CIA-RDP86-00513R001861010007-7"

"APPROVED FOR RELEASE: 03/14/2001 CIA-RDP86-00513R001861010007-7

ACC NR: AT7002129 (A) SOURCE CODE: UR/0000/66/000/000/0521/0528

AUTHORS: Vorontsov, V. L.; Moskalev, V. A.; Nagibina, I. M.; Omel'chenko, D. I.; Khesin, G. L.

ORG: none

TITLE: Determining the sum of principal stresses with the aid of interferometers

SOURCE: Vsesoyuznaya konferentsiya po polyarizatsionno-opticheskomu metodu issledovaniya napryazheniy. 5th, Leningrad, 1964. Polyarizatsionno-opticheskiy metod issledovaniya napryazheniy (Polarizing-optical method of investigating stresses); trudy konferentsii. Leningrad, Izd-vo Leningr. univ., 1966, 521-528

TOPIC TAGS: stress analysis, optics, optic measurement, optic method, light interference, interferometer, multibeam interferometer

ABSTRACT: The construction and performance of a device used for the measurement of principal stresses in materials are described. The work was done at the Leningrad Institute of Precise Mechanics (Leningradskiy institut tochnoy mekhaniki) and the Moscow Structural Engineering Institute (Moskovskiy inzhenerno-stroitel'nyy institut). The device is the triple-plate interferometer IT (see Fig. 1). The interferometer consists of three light-separating covers A, B, and C set on glass plates. The light paths are shown in Fig. 1: rays 1 and 2 form the interference pattern of greatest intensity, and all calculations are referenced to these two. The variation of the

Card 1/3

APPROVED FOR RELEASE: 03/14/2001 CIA-RDP86-00513R001861010007-7"

"APPROVED FOR RELEASE: 03/14/2001 CIA-RDP86-00513R001861010007-7

ACC NR: AT7002129

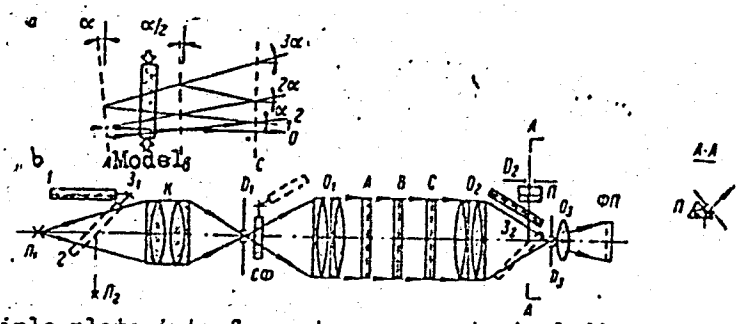

Fig. 1. Triple-plate interferometer: a - principal diagram of the device; b - optical diagram of the interferometer; $Л_1$ - DRSh-250 lamp; $Л_2$ - STs-76 lamp; $З_1$ - rotating mirror for source shift; K - condenser; D_1 - input diaphragm; CØ - light filter; O_1 - collimator objective; O_2 - camera objective; A,B,C - interferometer plates; $З_2$ - rotating "ocular-photo" mirror; D_2 and D_3 - output diaphragms; П - rotating ocular prism; O_3, ØП - photo attachment

distance between the light-separating covers may be equated with the length of the optical paths of the first and second beams. The path difference between paths 1 and 2 is given by

$$\Delta = N\lambda = 2\delta t(n-1),$$

Card 2/3

APPROVED FOR RELEASE: 03/14/2001 CIA-RDP86-00513R001861010007-7"

"APPROVED FOR RELEASE: 03/14/2001 CIA-RDP86-00513R001861010007-7

ACC NR: AT7002129

where N is the order of interference; λ - the wavelength of the light; δt the variation of thickness of the model; n - the refraction index of the material of the model. Also, from Hooke's Law

$$\varepsilon_z = \frac{\delta t}{t} = \frac{1}{E}[\sigma_z + \mu(\sigma_x + \sigma_y)],$$

and for $\sigma_z = 0$, it follows that

$$\delta t = \frac{t\mu}{E}(\sigma_x + \sigma_y),$$

where E and μ are the modulus of elasticity and Poisson's coefficient, respectively. Principal stresses are then related to the order of interference by the equation

$$N = \frac{2t\mu(n-1)}{E\lambda}(\sigma_x + \sigma_y) = K(\sigma_1 + \sigma_2).$$

The authors illustrate by example how the device may be used to determine the sum of principal stresses and each principal stress individually. The device itself is noted as being simple in construction and in use, compact, and stable with respect to vibration and temperature variation. Orig. art. has: 5 figures and 5 equations.

[W.A.101]

SUB CODE: 20, 13/ SUBM DATE: 14Jun66/ ORIG REF: 004/ OTH REF: 007

Card 3/3

APPROVED FOR RELEASE: 03/14/2001 CIA-RDP86-00513R001861010007-7"

"APPROVED FOR RELEASE: 03/14/2001 CIA-RDP86-00513R001861010007-7

VORONTSOV, V.N., inzh.

Making cores by machines and increasing the exactness of cores in small-lot production. Izv.vys.ucheb.zav.; mashinostr. no.7/8:180-188 '58. (MIRA 12:8)

1. Moskovskiy vecherniy mashinostroitel'nyy institut.
(Coremaking)

APPROVED FOR RELEASE: 03/14/2001 CIA-RDP86-00513R001861010007-7"

"APPROVED FOR RELEASE: 03/14/2001 CIA-RDP86-00513R001861010007-7

VORONTSOV, V.N., inzhener.

Studying the use of mass-production foundry molding machines. Lit. proizv.no.12:10-11 D '56. (MIRA 10:3)
(Foundry machinery and supplies) (Machine molding (Founding))

APPROVED FOR RELEASE: 03/14/2001 CIA-RDP86-00513R001861010007-7"

"APPROVED FOR RELEASE: 03/14/2001 CIA-RDP86-00513R001861010007-7

VORONTSOV, V.N.

Ca

11H

Duration of phenolphthalein excretion through animal intestines. V. N. Vorontsov. *Farmakol. i Toksikol.* 3, No. 5, 3-7 (1940). Phenolphthalein, injected subcutaneously, was excreted in feces of mice in 2-15 days after giving 25-3120 mg./kg., by white rats in 5-28 days after giving 29-1100 mg./kg. and by rabbits in 5-63 days after giving 28-948 mg./kg. Larger doses were excreted in less time when given by mouth. In frogs excretion took as much as 23 days, with shorter periods of excretion through the skin. Phenolphthalein caused no laxative effect in any of the animals but irritated the urinary bladder and alimentary canal in frogs. Julian F. Smith

APPROVED FOR RELEASE: 03/14/2001 CIA-RDP86-00513R001861010007-7"

"APPROVED FOR RELEASE: 03/14/2001 CIA-RDP86-00513R001861010007-7

DOMARATSKIY, A.N.; VORONTSOV, V.P.; DOVGIY, V.A.; IVANOV, L.N.; KARYSHEV, Ye.N.

Specialized computer system for statistical investigations.
Trudy Inst. avtom. i elektrometr. SO AN SSSR no.9:94-102 '64.
(MIRA 17:11)

APPROVED FOR RELEASE: 03/14/2001 CIA-RDP86-00513R001861010007-7"

"APPROVED FOR RELEASE: 03/14/2001 CIA-RDP86-00513R001861010007-7

APPROVED FOR RELEASE: 03/14/2001 CIA-RDP86-00513R001861010007-7"

"APPROVED FOR RELEASE: 03/14/2001 CIA-RDP86-00513R001861010007-7

L 46291-65

[illegible]

[illegible] is not advisable. The choice is [illegible]

APPROVED FOR RELEASE: 03/14/2001 CIA-RDP86-00513R001861010007-7"

"APPROVED FOR RELEASE: 03/14/2001 CIA-RDP86-00513R001861010007-7

Voronisov, V. P.; Bovgiy, V. A.; Ivanov, L. N.;

Karyshev, Ye. A.

puter memory, computer output device, magnetic drum [illegible]

[illegible] A specialized computer for statistical investigations is proposed. The

APPROVED FOR RELEASE: 03/14/2001 CIA-RDP86-00513R001861010007-7"

"APPROVED FOR RELEASE: 03/14/2001 CIA-RDP86-00513R001861010007-7

APPROVED FOR RELEASE: 03/14/2001 CIA-RDP86-00513R001861010007-7"

"APPROVED FOR RELEASE: 03/14/2001 CIA-RDP86-00513R001861010007-7

VORONTSOV, V.P.

Mechanism for returning the carriers in glass tempering furnaces. Stek. i ker. 19 no.6:32-33 Je '62. (MIRA 15:7)

1. L'vovskiy mekhanizirovannyy stekol'nyy zavod.
(Glass factories)

APPROVED FOR RELEASE: 03/14/2001 CIA-RDP86-00513R001861010007-7"

"APPROVED FOR RELEASE: 03/14/2001 CIA-RDP86-00513R001861010007-7

VORONTSOV, V.V., kand. sel'skokhoz. nauk

Root hair and mycorhiza of the tea plant. Agrobiologiia no.4:626-628
Agrobiologiia no.4:626-628 Jl-Ag '59. (MIRA 12:10)

1.Filial Vsesoyuznogo nauchno-issledovatel'skogo instituta chaya i subtropicheskikh kul'tur, g.Chakva.
(Tea) (Mycorhiza)

APPROVED FOR RELEASE: 03/14/2001 CIA-RDP86-00513R001861010007-7"

"APPROVED FOR RELEASE: 03/14/2001 CIA-RDP86-00513R001861010007-7

M-8

USSR/Cultivated Plants. Subtropical Tropical.

Abs Jour: Ref Zhur-Biologiya, No 5, 1958, 20537.

Author : V.V. Vorontsov
Inst : Chakvi Affiliate of the All-Union Scientific Research Institute for Tea and Subtropical Cultures.
Title : The Phenomenon of Atrophy in the Absorptive Root System of Tea Plants.
(Yavleniye otmiraniya vsasyvayushchey kornevoy sistemy u chaynogo rasteniya).

Orig Pub: Dokl. VASKhNIL, 1956, No 12, 22-24.

Abstract: In the Chakvi affiliate of the All-Union Scientific Research Institute for Tea and Subtropical Cultures, the degree of destruction was determined in the Young absorptive roots of one and two year old tea seedlings by means of monthly thorough-going examination of the whole root system.

Card : 1/2

APPROVED FOR RELEASE: 03/14/2001 CIA-RDP86-00513R001861010007-7"

"APPROVED FOR RELEASE: 03/14/2001 CIA-RDP86-00513R001861010007-7

BELYANKIN, L.F.; VORONTSOV, V.V.; VOLKOVA, I.B.

Lithofacies characteristics of lower Mesozoic sediments. Trudy Lab.geol.ugl. no.12:199-207 '61. (MIRA 14:8)
(Kenderlyk Valley--Coal geology)

APPROVED FOR RELEASE: 03/14/2001 CIA-RDP86-00513R001861010007-7"

"APPROVED FOR RELEASE: 03/14/2001 CIA-RDP86-00513R001861010007-7

VORONTSOV, V. V.

Vorontsov, V. V.

"The Root System of the Tea Plant and the Dynamics of Its Development." Min Higher Education USSR. Tbilisi, 1955 (Dissertation for the degree of Candidate in Agricultural Sciences)

SO: Knizhnaya letopis' No. 27, 2 July 1955

APPROVED FOR RELEASE: 03/14/2001 CIA-RDP86-00513R001861010007-7"

"APPROVED FOR RELEASE: 03/14/2001 CIA-RDP86-00513R001861010007-7

VORONTSOV, V.V., kandidat sel'skokhozyaystvennykh nauk.

Dying of the absorbing root system in the tea plant. Dokl.Akad.sel'-khoz.21 no.12:22-24 '56. (MLRA 10:2)

1. Sochinskaya opytnaya stantsiya subtropicheskikh i yuzhnykh plodovykh kul'tur. Predstavlena akademikom K.Ye.Bakhtadze.
(Tea) (Roots (Botany))

APPROVED FOR RELEASE: 03/14/2001 CIA-RDP86-00513R001861010007-7"

"APPROVED FOR RELEASE: 03/14/2001 CIA-RDP86-00513R001861010007-7

VORONTSOV, Valentin Vladimirovich; SINITSYN, V.M., doktor geol.-miner. nauk, prof., otv.red.;

[Structure and conditions governing the formation of Lower Mesozoic coal measures in the Karaganda Basin] Stroenie i usloviia obrazovaniia nizhnemezozoiskoi uglenosnoi tolshchi Karagandinskogo basseina. Moskva, Nauka, 1965. 139 p. (MIRA 18:3)

APPROVED FOR RELEASE: 03/14/2001 CIA-RDP86-00513R001861010007-7"

"APPROVED FOR RELEASE: 03/14/2001 CIA-RDP86-00513R001861010007-7

BELYANKIN, L.F.; VORONTSOV, V.V.

Short review of the history of the study of lower Mesozoic sediments in the Kenderlyk trough. Trudy Lab.geol.ugl. no.12:177-179 '61. (MIRA 14:8)
(Kenderlyc Valley--Coal geology)

APPROVED FOR RELEASE: 03/14/2001 CIA-RDP86-00513R001861010007-7"

"APPROVED FOR RELEASE: 03/14/2001 CIA-RDP86-00513R001861010007-7

BELYANKIN, L.F.; VORONTSOV, V.V.

Geological characteristics of lower Mesozoic sediments in the Kenderlyk trough. Trudy Lab.geol.ugl. no.12:188-199 '61. (MIRA 14:8)

(Kenderlyk Valley—Coal geology)

APPROVED FOR RELEASE: 03/14/2001 CIA-RDP86-00513R001861010007-7"

"APPROVED FOR RELEASE: 03/14/2001 CIA-RDP86-00513R001861010007-7

VORONTSOV, V.V.

Paleogeography of the Kenderlyk trough during the lower Mesozoic sedimentation. Trudy Lab.geol.ugl. no.12:232-234 '61. (MIRA 14:8)

(Kenderlyk Valley--Paleogeography)

APPROVED FOR RELEASE: 03/14/2001 CIA-RDP86-00513R001861010007-7"

"APPROVED FOR RELEASE: 03/14/2001 CIA-RDP86-00513R001861010007-7

VORONOV, S.M.

M

23

Voronov, S. M. *Gears in Aluminium Alloys and Methods for the Degreasing of Mills.* [In Russian.] Pp. 49. 1938. Moscow: NKOP.

ASM-SLA METALLURGICAL LITERATURE CLASSIFICATION

APPROVED FOR RELEASE: 03/14/2001 CIA-RDP86-00513R001861010007-7"

"APPROVED FOR RELEASE: 03/14/2001 CIA-RDP86-00513R001861010007-7

VORONTSOV, V. Ye.

Vorontsov, V. Ye. "Influence of temperature during the drying of the fruit and seeds of tung on the yield and quality of tung oil", Bulleten' Vsesoyuz. nauch.-issled. in-ta chaya i subtrop. kul'tur, 1948, No. 4, p. 147-53.

SO: U-3042, 11 March 53, (Letopis 'nykh Statey, No. 10, 1949).

APPROVED FOR RELEASE: 03/14/2001 CIA-RDP86-00513R001861010007-7"

"APPROVED FOR RELEASE: 03/14/2001 CIA-RDP86-00513R001861010007-7

VORONTSOV, Yevgeniy Andreyevich; CHEREPANOV, B.I., red.; KHOMENKO, V.A., red.; ISUPOVA, N.A., tekhn. red.

[Yalta; handbook and guide]IAlta; putevoditel'-spravochnik. Izd.2. Simferopol', Krymizdat, 1962. 125 p. (MIRA 15:11)
(Yalta--Guidebooks)

APPROVED FOR RELEASE: 03/14/2001 CIA-RDP86-00513R001861010007-7"

"APPROVED FOR RELEASE: 03/14/2001 CIA-RDP86-00513R001861010007-7

VORONTSOV, Yevgeniy Andreyevich, krayoved; BAYEV, Yevgeniy, red.

[Yalta; a guidebook and directory] IAlta; putevoditel'-spravochnik. Simferopol', Izd-vo "Krym," 1965. 126 p. (MIRA 18:6)

APPROVED FOR RELEASE: 03/14/2001 CIA-RDP86-00513R001861010007-7"

"APPROVED FOR RELEASE: 03/14/2001 CIA-RDP86-00513R001861010007-7

VORONTSOV, YE. A.
USSR/Zoology

Card 1/1

Author : Vorontsov, E. A.

Title : A Rapana mollusk on the Crimean coast

Periodical : Priroda, 5, page 116, May 1954

Abstract : A Rapana mollusk was recently fished out in the Yaltinsk harbor (Black Sea). This gastropoda was the first ever seen in that region. The dimensions of its shell were 8 cm, 10.5 cm. The external color was brown and the internal orange. The inside of the shell has a bright violet color. The shell is now in the Yaltinsk Museum of Natural Sciences.

Institution : Museum of Natural Sciences, Yaltinsk

Submitted : ....

APPROVED FOR RELEASE: 03/14/2001 CIA-RDP86-00513R001861010007-7"

"APPROVED FOR RELEASE: 03/14/2001 CIA-RDP86-00513R001861010007-7

CHERNOBYL'SKIY, I.I. [Chornobyl's'kyi, I.I.], doktor tekhn. nauk; TANANAYKO, Yu.M; VORONTSOV, Ye.G. [Vorontsov, IE.H.]

Measuring the thickness of the film of a down-flowing fluid. Khim. prom. no.4:37-39 O-D '64. (MIRA 18:3)

APPROVED FOR RELEASE: 03/14/2001 CIA-RDP86-00513R001861010007-7"

"APPROVED FOR RELEASE: 03/14/2001 CIA-RDP86-00513R001861010007-7

CHERNOBYL'SKIY, I.I. [Chornobyl's'kyi, I.I.], kand.tekhn.nauk; VORONTSOV, Ye.G. [Vorontsov, IE.H.]

Minimum spraying density of film apparatus. Khim.prom. [Ukr.] no.2:54-55 Ap-Je '65. (MIRA 18:6)

APPROVED FOR RELEASE: 03/14/2001 CIA-RDP86-00513R001861010007-7"