"APPROVED FOR RELEASE: 03/14/2001 CIA-RDP86-00513R001961820018-5

L 02401-67

ACC NR: AT6022329

function of frequency for various density profiles may be used to determine the effect of nonhomogeneity on propagation of waves in a nonhomogeneous cylinder. The results of this work show that the concept of an N-layered cylinder may be successfully used for computerized calculation of the properties of a cylinder with arbitrary nonhomogeneity. These data also show that care should be taken in applying the conclusions of the theory of a homogeneous cylinder to practical cases. Finally, the results of these computations may be applied in using surface waves in a plasma cylinder for determining both average plasma concentration and plasma distribution with respect to radius. Orig. art. has: 1 figure, 7 formulas.

SUB CODE: 20/ SUBM DATE: 04May66/ ORIG REF: 005/ OTH REF: 005

Card 3/3

APPROVED FOR RELEASE: 03/14/2001 CIA-RDP86-00513R001961820018-5"

"APPROVED FOR RELEASE: 03/14/2001 CIA-RDP86-00513R001961820018-5

SOV/112-57-5-9748

8 (0)

Translation from: Referativnyy zhurnal. Elektrotekhnika, 1957, Nr 5, p 13 (USSR)

AUTHOR: Yakimenko, L. B.

TITLE: Behavior of Fiberglass Insulation at Very High Temperatures (Povedeniye steklovoloknistoy izolyatsii pri osobo vysokoy temperature)

PERIODICAL: Sb. statey nauch.-stud. o-va Mosk. energ. in-ta, 1956, Nr 9, pp 148-151

ABSTRACT: Type PSD (glyptal-varnish treated) and type PSDK (silicon-varnish treated) electric conductors were held at 500°C for a long time. After 65 hours at the above temperature, the PSD conductor had an insulation resistance of 0.0058, while its initial insulation resistance had been 203 Mohm/km. A fairly high electric strength still remained under the above conditions: 500 v for PSD and 700 v for PSDK. With higher temperatures, an electric-type breakdown occurs (rather than thermal type) because glass permittivity ε_s increases rapidly with temperature while air permittivity ε remains equal to

Card 1/2

APPROVED FOR RELEASE: 03/14/2001 CIA-RDP86-00513R001961820018-5"

"APPROVED FOR RELEASE: 03/14/2001 CIA-RDP86-00513R001961820018-5

SOV/112-57-5-9748

Behavior of Fiberglass Insulation at Very High Temperatures

unity; hence, the voltage gradient in the air will be ε_s times higher than that in the glass, and the breakdown will occur in the air layer. To ensure higher electric strength, fiberglass insulation is usually varnish-impregnated. However, at 300°-400°C, the varnish burns out and leaves air inclusions which reduce the electric strength of fiberglass-air composition. For this reason, impregnation of conductors intended for operation at the above temperatures makes no sense; the use of such conductors is limited by a low mechanical strength of the fiberglass. In designing conductors for operating temperature up to 500°C, it is necessary to make allowance for wire-resistance increase both from the high temperature and from a rapid oxidation of copper. It is recommended that silver wire be substituted for the copper wire. It is stated that precisely glass should become the principal material for insulating conductors with particularly high heat resistance.

P.I.Z.

Card 2/2

APPROVED FOR RELEASE: 03/14/2001 CIA-RDP86-00513R001961820018-5"

"APPROVED FOR RELEASE: 03/14/2001 CIA-RDP86-00513R001961820018-5

VASYUTINSKIY, B.M.; KOGAN, V.S.; KARTMAZOV, G.N.; YAKIMENKO, L.F., diplomnitsa

Constitutional diagram of the nickel - chromium system. Fiz. met. i metalloved. 9 no. 4:558-563 Ap '60. (MIRA 14:5)

1. Fiziko-tekhnicheskiy institut AN USSR.
(Phase rule and equilibrium)
(Nickel-chromium alloys--Metallography)

APPROVED FOR RELEASE: 03/14/2001 CIA-RDP86-00513R001961820018-5"

"APPROVED FOR RELEASE: 03/14/2001 CIA-RDP86-00513R001961820018-5

S/126/62/013/002/017/019
E039/E135

18.1735

AUTHORS: Vasyutinskiy, B.M., Kogan, V.S., Kartmazov, G.N., and Yakimenko, L.F.

TITLE: The formation of textured layers of nitride on chromium obtained by condensation in vacuum from the vapour phase

PERIODICAL: Fizika metallov i metallovedeniye, v.13, no.2, 1962, 310-311

TEXT: It is shown that the skin formed on the surface of chromium when heated in air or oxygen consists of two layers: an external layer of rhombic Cr_2O_3 and an internal layer of hexagonal Cr_2N. This was discovered by means of X-ray diffraction measurements. The structure of the skin formed on chromium when heated in air and in nitrogen up to 1300 °C was examined for two different samples: one was chromium cast and rolled in vacuum, and the other a sample of chromium obtained by condensation from the vapour phase. This condensation was carried out at a pressure of 10^{-3} mm Hg on to a molybdenum plate over a period of

Card 1/2

APPROVED FOR RELEASE: 03/14/2001 CIA-RDP86-00513R001961820018-5"

"APPROVED FOR RELEASE: 03/14/2001 CIA-RDP86-00513R001961820018-5

10-15 hours forming a layer 300-500 μ thick. This layer was then annealed in air for 450 hours. The skin formed was studied by means of X-ray diffraction using K_α-Cr radiation to improve definition. Maximum reflection from the (110) plane was obtained with the sample placed at 56° to the incident beam, indicating that the nitride is orientated with the (110) plane parallel to the surface. In the case of chromium cast and rolled in a vacuum at a temperature of 1100 °C no structure corresponding to the nitride layer was discovered; similarly, chromium cast and rolled in air and in nitrogen at a temperature of 900-1200 °C showed no structure. It is observed that the structured layer of nitride on the chromium condensed from the vapour phase is much more firmly bonded to the outer oxide layer than in the case of the structureless nitride on cast chromium from which the oxide layer is easily separated.

ASSOCIATION: Fiziko-tekhnicheskiy institut AN UkrSSR (Physicotechnical Institute, AS UkrSSR)

SUBMITTED: May 22, 1961

APPROVED FOR RELEASE: 03/14/2001 CIA-RDP86-00513R001961820018-5"

"APPROVED FOR RELEASE: 03/14/2001 CIA-RDP86-00513R001961820018-5

[illegible]

ACCESSION NR: AP5006[illegible] S/0181/65/007/003/0852/0857

39

AUTHOR: Bulatov, A. S.; Kogan, V. S.; Yakimenko, L. F.

TITLE: Texture in layers of gase condensed on a cold substrate

SOURCE: Fizika tverdogo tela, v. 7, no. 3, 1965, 852-857

TOPIC TAGS: hydrogen, neon, condensed layer, layer structure, low temperature research

27

ABSTRACT: Unlike earlier investigations of orientation in layers obtained by condensation from the vapor phase, which were devoted principally to metallic condensates, the object of investigation in this work were crystals with molecular binding forces, namely hydrogen and neon condensed from the gas phase [illegible] substrates cooled with liquid helium. Along with natural isotopic mixtures of each [illegible] (pro- [illegible] heavier isotopes [illegible] were [illegible] [illegible] similar to that used by the authors earlier [illegible] [illegible] and v. [illegible], [illegible], 1964). The main modification was the use of a substrate in the form of a beryllium plate of thickness 0.4 mm, which could be set at different angles to the primary beam of x-rays used for the structural analysis. The re-

Card 1/2

APPROVED FOR RELEASE: 03/14/2001 CIA-RDP86-00513R001961820018-5"

"APPROVED FOR RELEASE: 03/14/2001 CIA-RDP86-00513R001961820018-5

L 49047-65

ACCESSION NR: AP5006894

sults have shown the presence of texture in the layers. Protium has a texture with axes [001] of the hexagonal lattice oriented either perpendicular to the substrate (condensation with substrate temperature ~ 1.8K) or parallel to it (condensation at 4.2K). Deuterium has a texture with [001] axes perpendicular to the substrate in the condensation temperature interval 1.8--4.2K. Both neon isotopes condensed at 4.2K have a texture with [111] of the cubic lattice perpendicular to [illegible] [illegible] that the texture depends [illegible]

art. has: [illegible] figures and [illegible]

ASSOCIATION: Fiziko-tekhnicheskiy institut AN SSSR, Khar'kov (Physicotechnical Institute)

SUBMITTED: 17Oct64 ENCL: 00 SUB CODE: SS, TD

NR REF SOV: 004 OTHER: 000

Card 2/2 CC

APPROVED FOR RELEASE: 03/14/2001 CIA-RDP86-00513R001961820018-5"

"APPROVED FOR RELEASE: 03/14/2001 CIA-RDP86-00513R001961820018-5

EWP(t)/ETI IJP(c) JD/JG

AUTHOR: Kogan, V. S.; Lazarev, B. G.; Matsakova, A. A.; Ovcharenko, O. N.; Yakimenko, L. F.

ORG: Physicotechnical Institute, AN UkrSSR (Fiziko-tekhnicheskiy institut AN UkrSSR)

SOURCE CODE: UR/0126/66/021/006/0828/0832

TITLE: The width of the homogeneity region of intermetallic phases in the Nb-Sn and V-Ga systems

SOURCE: Fizika metallov i metallovedeniye, v. 21, no. 6, 1966, 828-832

TOPIC TAGS: superconducting compound, niobium alloy, binary alloy, tin containing alloy, vanadium alloy, gallium containing alloy, intermetallic compound, compound homogeneity region

ABSTRACT: Experiments have been made to determine the width of the homogeneity region of intermetallic phases formed in the Nb-Sn and V-Ga systems, i.e., systems whose components have widely different melting temperatures. Nb_3Sn and V_3Ga intermetallic compounds were obtained by diffusion of Nb_3Sn by holding an Nb specimen for several hours in molten tin at 1000C, and V_3Ga by holding a vanadium specimen wetted with gallium in a vacuum at about 1200C. X-ray diffraction patterns of the diffusion layer on vanadium showed that the surface layer contacting gallium and the inner layer adjacent to vanadium had equal lattice parameters, 4.819 ± 0.002 Å. The temperature of transition to the superconductivity state of V_3Ga was found to be

Card 1/2

SUB

UDC: 548.53

APPROVED FOR RELEASE: 03/14/2001 CIA-RDP86-00513R001961820018-5"

Card 2/2

"APPROVED FOR RELEASE: 03/14/2001 CIA-RDP86-00513R001961820018-5

L 32037-66

ACC NR: AP6018939

14.44K with a transition zone width of 0.2K. These data confirmed that the diffusion zone consisted only of V_3Ga compound of stoichiometric composition. Similar results were obtained for Nb_3Sn compound. The layers adjacent to Sn and Nb had the same lattice parameters, equal to 5.288 ± 0.001 Å, which showed that the homogeneity region of Nb_3Sn compound is also very narrow. A wide homogeneity region reported in some earlier works for the refractory metal-rich phases in alloys whose components have widely different melting temperatures is presumably a result of tested alloys being in nonequilibrium state owing to a low diffusion rate of these phases. Orig. art. has: 3 figures. [MS]

SUB CODE: 11/ SUBM DATE: 26Jul65/ ORIG REF: 004/ OTH REF: 005/ ATD PRESS 5019

Card 2/2

APPROVED FOR RELEASE: 03/14/2001 CIA-RDP86-00513R001961820018-5"

"APPROVED FOR RELEASE: 03/14/2001 CIA-RDP86-00513R001961820018-5

ACC NR: AP6037060 (N) SOURCE CODE: UR/0056/66/051/005/1328/1331

AUTHOR: Kogan, V. S.; Lazarev, B. G.; Yakimenko, L. F.

ORG: Physicotechnical Institute, Academy of Sciences UkrSSR (Fiziko-tekhnicheskiy institut Akademii nauk UkrSSR)

TITLE: X-ray diffraction analysis of the structure of niobium-base superconducting alloys

SOURCE: Zhurnal eksperimental'noy i teoreticheskoy fiziki, v. 51, no. 5, 1966, 1328-1331

TOPIC TAGS: niobium base alloy, zirconium containing alloy, titanium containing alloy, superconducting alloy, alloy structure

ABSTRACT: A series of niobium-zirconium-titanium alloys containing 5—50% zirconium and 10—20% titanium has been investigated. It was found that all the as-cast specimens had the structure of a high-temperature cubic β-phase. Annealing of specimens containing up to 10% zirconium at temperatures up to 600C did not cause structural changes, which indicated that the β-phase was in equilibrium. Annealing of the alloys containing 20% zirconium at 550—600C caused a decomposition of the β-phase. In alloys containing 30% zirconium, the decomposition began at 450C, and annealing at 560C produced an equilibrium structure consisting of β- and α-phases. Orig. art. has: 4 figures and 1 table. [TD]

SUB CODE: 11/ SUBM DATE: 08Jun66/ ORIG REF: 001/ OTH REF: 003/ ATD PRESS: 5109

Card 1/1

APPROVED FOR RELEASE: 03/14/2001 CIA-RDP86-00513R001961820018-5"

"APPROVED FOR RELEASE: 03/14/2001 CIA-RDP86-00513R001961820018-5

SHVIDENKO, Valentin Iosifovich, prof.; MATOKHIN, Vladimir Pavlovich, dots., kand. tekhn. nauk; SMIRNOV, Aleksey Mikhaylovich, dots., kand. tekhn.nauk; FOKOV, Rostislav Ivanovich, kand. tekhn. nauk; CHERNYSHEV, Sergey Fedorovich, dots.kand.tekhn. nauk; YAKIMENKO, L.I., red.

[Assembly of multistory industrial buildings] Montazh mnogoetazhnykh promyshlennykh zdanii. Khar'kov, Izd-vo Khar'kovskogo univ., 1964. 142 p. (MIRA 18:3)

APPROVED FOR RELEASE: 03/14/2001 CIA-RDP86-00513R001961820018-5"

"APPROVED FOR RELEASE: 03/14/2001 CIA-RDP86-00513R001961820018-5

SITENKO, Aleksey Grigor'yevich; SHESTOPALOV, V.P., prof., otv. red.; YAKIMENKO, L.I., red.

[Electromagnetic fluctuations in a plasma] Elektromagnitnye fluktuatsii v plazme. Khar'kov, Izd-vo Khar'kovskogo univ., 1965. 184 p. (MIRA 18:5)

APPROVED FOR RELEASE: 03/14/2001 CIA-RDP86-00513R001961820018-5"

"APPROVED FOR RELEASE: 03/14/2001 CIA-RDP86-00513R001961820018-5

L 07448-67

ACC NR: AP6035875 SOURCE CODE: UR/0413/66/000/020/0097/0097

AUTHOR: Lube, V. M.; Safonov, Yu. D.; Yakimenko, L. I.; Devochkin, I. V.; Donets, A. M.

24
B

ORG: none

TITLE: Device for studying cardiac activity. 22 Class 30, no. 187215

SOURCE: Izobreteniya, promyshlennyye obraztsy, tovarnyye znaki, no. 20, 1966, 97

TOPIC TAGS: human physiology, cardiovascular system, bioinstrumentation

ABSTRACT: An Author Certificate has been issued for a device for studying cardiac activity consisting of an ultrasonic generator, a piezoelectric sensor with con-

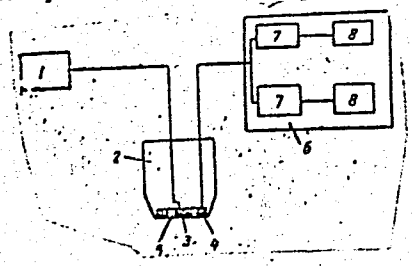

Fig. 1. A device for studying cardiac activity

1 - Ultrasonic generator; 2 - piezoelectric sensor; 3 - transmitting unit; 4 - receiving unit; 5 - annular gap; 6 - ultrasonic receiver; 7 - filters; 8 - recorders.

UDC: 615.47:612.171.1

Card 1/2

APPROVED FOR RELEASE: 03/14/2001 CIA-RDP86-00513R001961820018-5"

"APPROVED FOR RELEASE: 03/14/2001 CIA-RDP86-00513R001961820018-5

L 07448-67

ACC NR: AP6035875

centric transmitting and receiving units, and an ultrasonic receiver with a selection system and recorder (see Fig. 1). The selection system includes two filters at different frequencies for recording the character of cardiac muscle and heart valve movements. To increase sensitivity the concentric receiving and transmitting elements of the piezoelectric sensor are separated by an annular gap. Orig. art. has: 1 figure.

SUB CODE: 06, 14/ SUBM DATE: 15Apr65/ ATD PRESS: 5104

Card 2/2

APPROVED FOR RELEASE: 03/14/2001 CIA-RDP86-00513R001961820018-5"

"APPROVED FOR RELEASE: 03/14/2001 CIA-RDP86-00513R001961820018-5

YAKIMENKO, L.M.; KOKHANOV, G.N.; VESELOVSKAYA, I.Ye.; DZHAGATSPANYAN, R.V.

Investigating the electrochemical behavior of titanium and its alloys during the electrolysis of chloride solutions. Titan i ego splavy no. 10:168-175 '63. (MIRA 17:1)

APPROVED FOR RELEASE: 03/14/2001 CIA-RDP86-00513R001961820018-5"

"APPROVED FOR RELEASE: 03/14/2001 CIA-RDP86-00513R001961820018-5

ACCESSION NR: AP4012535 S/0056/64/046/001/0148/0152

AUTHORS: Kogan, V. S.; Bulatov, A. S.; Yakimenko, L. F.

TITLE: Texture in layers of hydrogen isotopes condensed in a cooled substrate

SOURCE: Zhurnal eksper. i teoret. fiz., v. 46, no. 1, 1964, 148-152

TOPIC TAGS: hydrogen isotopes, protium, deuterium, tritium, x ray structure, condensed hydrogen isotope, layer texture, protium crystal structure, deuterium crystal structure, tritium crystal structure, texture effect

ABSTRACT: To ascertain whether the difference between the x-ray diffraction patterns of condensed deuterium and protium is due to the presence of a texture, in contradiction to the earlier assumption by the authors (ZhETF v. 37, 678, 1939) that the difference is due to differences in extinction rules, the earlier experimental

Card 1/4

APPROVED FOR RELEASE: 03/14/2001 CIA-RDP86-00513R001961820018-5"

"APPROVED FOR RELEASE: 03/14/2001 CIA-RDP86-00513R001961820018-5

ACCESSION NR: AP4012535

procedure was modified. X-ray photographs were taken with the hydrogen isotopes condensed in one case inside a beryllium tube and in the other on the surface of a copper rod. Comparison of the photographs shows that the latter specimens have a texture which is not the same for protium layers as for deuterium. Preliminary data were also obtained for tritium. A re-evaluation of the previous structure data in light of the existence of this texture leads to the conclusion that both isotopes have a hexagonal structure with somewhat different axial ratios c/a. For protium the copper-radiation lines are (100), (002), and (101) with c = 6.6 Å and a - 3.78 Å (c/a = 1.63). The corresponding lines for deuterium are (100), (002), and (101) with a = 3.54 Å and c = 5.91 Å (c/a - 1.67). "The authors express their gratitude to Academician AN UkrSSR B. G. Lazarev for a discussion of the results." Orig. art. has: 3 figures.

ASSOCIATION: Fiziko-tekhnicheskiy institut AN UkrSSR (Physicotechnical Institute, AN UkrSSR)

Card 2/2

20 July 63

APPROVED FOR RELEASE: 03/14/2001 CIA-RDP86-00513R001961820018-5"

"APPROVED FOR RELEASE: 03/14/2001 CIA-RDP86-00513R001961820018-5

YAKIMENKO, L.M.

Filter-press electrolyzer. L. M. Yakimenko and A. I. Koloskov. Russ. 54,309, Dec. 31, 1938. Constructional details.

ASM-SLA METALLURGICAL LITERATURE CLASSIFICATION

APPROVED FOR RELEASE: 03/14/2001 CIA-RDP86-00513R001961820018-5"

"APPROVED FOR RELEASE: 03/14/2001 CIA-RDP86-00513R001961820018-5

APPROVED FOR RELEASE: 03/14/2001 CIA-RDP86-00513R001961820018-5"

"APPROVED FOR RELEASE: 03/14/2001 CIA-RDP86-00513R001961820018-5

YAKIMENKO, L.M.

USSR/Physical Chemistry - Radiochemistry, Isotopes. B-7

Abs Jour: Referat. Zhurnal Khimiya, No 3, 1958, 7097.

Author : A.I. Shatenshteyn, L.M. Yakimenko, V.R. Kalinachenko, Ye.A. Yakovleva.

Inst :

Title : Preparation of Deuterium Oxide and Determination of Its Density.

Orig Pub: Zh. neorgan. khimii, 1957, 2, No 5, 985-994.

Abstract: An installation for the preparation of D_2O was constructed and deuterium oxide of a high degree isotope purity was prepared. The density of D_2O was measured at 25, 30, 40 and 50°.

Card : 1/1 -1-

APPROVED FOR RELEASE: 03/14/2001 CIA-RDP86-00513R001961820018-5"

"APPROVED FOR RELEASE: 03/14/2001 CIA-RDP86-00513R001961820018-5

YAKIMENKO, L.M., doktor tekhn.nauk

Successes in the field of electrochemical production of chlorine.
Khim. nauka i prom. 3 no.4:424-431 '58. (MIRA 11:10)
(Chlorine (Electrolysis)

APPROVED FOR RELEASE: 03/14/2001 CIA-RDP86-00513R001961820018-5"

"APPROVED FOR RELEASE: 03/14/2001 CIA-RDP86-00513R001961820018-5

AUTHORS: Yakimenko, L. M., Volkov, G. I. SOV/64-58-5-15/21

TITLE: News in the Production of Chlorine and Caustic Potash According to the Mercury Method (Novoye v proizvodstve khlora i kaustika po rtutnomu metodu)

PERIODICAL: Khimicheskaya promyshlennost', 1958, Nr 5, pp.315 - 320 (USSR)

ABSTRACT: This paper is based on the data obtained from the Review of H.A.Sommers, Chem.Eng.Progr., 53, Nr 9, 409 (1957). Its production of a purer and cheaper product is given as the reason for the preferred development of the mercury method as opposed to the diaphragm electrolysis. The authors give a table of the electric indices of some tank types as well as a number of figures which demonstrate the type of construction. Among the types mentioned in the tables the tanks according to Matiyeson, Solve, Ude, of the BASF and the De-Nora are described. Various individual data as well as advantages and disadvantages of the tank types are mentioned and explained. It is found that the most effective increase of the amperage load of the tank is obtained by an increase of the current density. In plants with high output or low-voltage rectifiers it is

Card 1/2

APPROVED FOR RELEASE: 03/14/2001 CIA-RDP86-00513R001961820018-5"

"APPROVED FOR RELEASE: 03/14/2001 CIA-RDP86-00513R001961820018-5

useful to carry out the amperage load of the tank also at the expense of an increase in dimensions. The vertical scrubber analyzers of amalgam have no advantages over the horizontal ones. The tank constructions without passage are especially worth mentioning. Arrangements with separate shunting switches at the tanks prove to be unnecessary. The vertical tanks will have a special advantage over the horizontal tanks until it becomes possible for the approach of the electrodes according to the degree of consumption of the anodes. There are 13 figures and 4 tables.

1. Chlorine---Production 2. Potassium carbonates---Production
3. Electrolytes---Performance 4. Mercury---Applications

APPROVED FOR RELEASE: 03/14/2001 CIA-RDP86-00513R001961820018-5"

"APPROVED FOR RELEASE: 03/14/2001 CIA-RDP86-00513R001961820018-5

5(1),5(2) SOV/64-58-7-9/18

AUTHORS: Martynov, Yu. M., Yakimenko, L. M., Furman, A. A., Matveyev, M. A.

TITLE: The Technology of the Production and Use of Magnesium Chlorate for Defoliation (Tekhnologiya proizvodstva i primeneniye khlorat-magniyevykh defoliantov)

PERIODICAL: Khimicheskaya promyshlennost', 1958, Nr 7, pp 420-423 (USSR)

ABSTRACT: Mainly calcium cyanamide is used for artificial defoliation. In the cotton districts of the USSR irregular results were, however, obtained as the use of this substance depends on certain meteorological conditions. Among several preparations investigated the best results were obtained with magnesium chlorate. A comparative table of the experimental results with calcium cyanamide and magnesium chlorate for defoliation of cotton plants demonstrates that the effect of magnesium chlorate depends to a much lesser degree on temperature and meteorological conditions. The production possibilities of magnesium chlorate were studied, and it was found that favorable results are obtained after the reaction $2\ NaClO_3 + MgCl_2 \rightarrow Mg(ClO_3)_2 + 2NaCl$

Card 1/2

APPROVED FOR RELEASE: 03/14/2001 CIA-RDP86-00513R001961820018-5"

"APPROVED FOR RELEASE: 03/14/2001 CIA-RDP86-00513R001961820018-5

if carried out in acetone. The purity of the product obtained depends on the amount of water present in the $MgCl_2$. A further method that already can be used industrially consists in the fact that sodium chlorate is added to the fused $MgCl_2 \cdot 6H_2O$ (Ref 12); thus a solid crystalline product is obtained. The temperature is maintained at 110-120° and special melting crucibles are used. To obtain a reaction product with a minimum melting-point of 45° the ratio between magnesium chloride and sodium chlorate must be 1.3 - 1.4 . To produce one ton with 58% $Mg(ClO_3)_2 \cdot 6H_2O$ 0.44 tons of sodium chlorate and 0.56 tons of $MgCl_2 \cdot 6H_2C$ are required.

There are 2 figures, 4 tables, and 12 references, 3 of which are Soviet.

APPROVED FOR RELEASE: 03/14/2001 CIA-RDP86-00513R001961820018-5"

"APPROVED FOR RELEASE: 03/14/2001 CIA-RDP86-00513R001961820018-5

PHASE I BOOK EXPLOITATION SOV/4054

Akademiya nauk SSSR. Institut nauchnoy informatsii

Khimicheskaya promyshlennost' SSSR (The Chemical Industry of the USSR) Moscow, Goskhimizdat, 1959. 457 p. Errata slip inserted. 4,100 copies printed.

Sponsoring Agency: USSR. Gosudarstvennyy nauchno-tekhnicheskiy komitet.

Ed.: E. S. Rozin; Tech. Ed.: P. V. Pogudkin; Editorial Board: A. P. Vinogradov, S. I. Vol'fkovich, N. M. Zhavoronkov, M. I. Ivanov, V. S. Kiselev, I. A. Lunacharskaya (Scientific Secretary), S. S. Medvedev, B. D. Mel'nik, A. S. Planovskiy, A. Ya. Rysbenko (Chief Ed.), and A. V. Topchiyev.

PURPOSE: This book is intended for the personnel of the chemical industry. It will be of interest to the general reader interested in the development and structure of the Soviet chemical industry.

COVERAGE: This book contains 18 articles on various aspects of the Soviet chemical industry. Among the developments in the production of raw materials for the manufacture of chemical products discussed are: 1) the use of raw materials synthesized from natural gas and petroleum to replace food products in the production of synthetic rubber, alcohol, detergents, etc.; 2) the production of acetylene from natural and petroleum gases for the synthesis of vinyl chloride, acrilonitrile, chloroprene, trichloroprene, 1, 4-butadiene, and other organic substances, based on methods developed by M. G. Kucherov, A.Ye. Favorskiy and others; 3) the production of acetylene from saturated hydrocarbons by cracking methane (and its homologs) at 1450° in an electric arc between two special electrodes in a gas reactor, by pyrolysis (thermal oxidation) of methane in an improved furnace designed by B. S. Grinenko, by high-temperature pyrolysis of propane and butane in tubular furnaces, or by other methods of producing acetylene for the production of synthetic rubber, ethyl alcohol, and other organic substances; 4) the synthesis of halogen derivatives of aliphatic hydrocarbons for the production of solvents, refrigerants, pharmaceutical products, etc., and 5) the production of rubber accelerators from nitrogen-containing aliphatic hydrocarbons. The history of plastics production in the Soviet Union is reviewed, and names, locations, and products of plants as well as the names of outstanding personalities in the field are given. The technical level and prospects of further development of different branches of the plastics industries are also discussed along with methods of manufacturing plastic articles. A special apparatus designed by Ye. M. Mogilevskiy and designated "VA" which permits preparation of viscose solution in one operation is discussed. It is being used to replace the complex, conventional equipment with great savings in space. General trends in the technology of synthetic fiber production are also discussed. A historical review of synthetic rubber production and the achievements of outstanding Soviet scientists in this field are given as well as names, locations and products of synthetic rubber plants. Rubber production and the manufacture of rubber goods are similarly reviewed. Statistical data and outstanding personalities in the development of the aniline dyes, paints and lacquers, mineral fertilizers, insecticides and fungicides, sulfuric acid, soda, mineral salts, radioactive and stable isotopes, and chemical reagents industries are given. Catalytic processes and automation and automatic devices used in the chemical industry are also discussed. Thirty-eight photographs included in the book show outside and interior views of some Soviet chemical industry plants, as well as their manufacturing, material-handling and laboratory equipment. Numerous personalities and facilities are identified in the body of the text. References accompany individual articles.

Vol'fkovich, S.I., A.M. Dubovitskiy (deceased), and N.A. Simulin. The Production of Mineral Fertilizers and Fixed Nitrogen 256

Ul'yanov, N. S. The Chemical Mining Industry 302

Malin, K.M. Sulfuric Acid Production 314

Boguslavskiy, N.M. The Soda Industry 323

Yakimenko, L.M. The Chlorine Industry 333

Bogachev, G.N. The Production of Mineral Salts 345

Globus, R.L., V.G. Brodz', and G.V. Chuchkin. Chemical Reagents and High-Purity Substances 360

Frolov, Yu.S., V. V. Bochkarev, I.F. Tupitsyn, and R.L. Globus. The Preparation of Radioactive and Stable Isotopes: A New Branch of Chemical Technology 381

Card 5/6

APPROVED FOR RELEASE: 03/14/2001 CIA-RDP86-00513R001961820018-5"

"APPROVED FOR RELEASE: 03/14/2001 CIA-RDP86-00513R001961820018-5

YAKIMENKO, L.M., doktor tekhn.nauk

All-Union Conference on the Technique of the Diaphragm Method of Electrolysis of Alkali Metal Chlorides in Solution. Zhur. VKHO 5 no.4:468-469 '60. (MIRA 13:12)
(Sodium chloride) (Electrolysis)

APPROVED FOR RELEASE: 03/14/2001 CIA-RDP86-00513R001961820018-5"

"APPROVED FOR RELEASE: 03/14/2001 CIA-RDP86-00513R001961820018-5

YAKIMENKO, L.M., doktor tekhn.nauk.

Scientific and technological conference on the production of chlorine and caustic soda by the electrolysis of aqueous solutions of alkali metal chlorides using a mercury cathode. Zhur. VKHO 5 no.6:699-701 '60. (MIRA 13:12)

(Chlorine) (Sodium hydroxide) (Electrolysis)

APPROVED FOR RELEASE: 03/14/2001 CIA-RDP86-00513R001961820018-5"

"APPROVED FOR RELEASE: 03/14/2001 CIA-RDP86-00513R001961820018-5

SIMON, A.G.; KHAIN, P.G.; YAKIMENKO, L.M., doktor tekhn.nauk

Ways of intensifying the technological processes in the production of chlorine. Zhur.VKHO 6 no.1:16-27 '61. (MIRA 14:3)
(Chlorine)

APPROVED FOR RELEASE: 03/14/2001 CIA-RDP86-00513R001961820018-5"

"APPROVED FOR RELEASE: 03/14/2001 CIA-RDP86-00513R001961820018-5

S/844/62/000/000/069/129
D204/D307

AUTHORS: Yakimenko, L. M., Dzhagatspanyan, R. V., Zetkin, V. I., Korolev, B. M. and Maksimov, M. P. (deceased)

TITLE: Chlorine exchange between hexachlorocyclohexane (I) and carbon tetrachloride, under the action of γ radiation

SOURCE: Trudy II Vsesoyuznogo soveshchaniya po radiatsionnoy khimii. Ed. by L. S. Polak. Moscow, Izd-vo AN SSSR, 1962, 398-402

TEXT: The behavior was studied of purified α-, β-, γ-, and δ-isomers of I, with CCl_4 labelled with Cl^{36}, under the action of γ irradiation at 120 r/sec over 1 - 15 hours, at $\sim 30^{\circ}C$. The mixtures consisted of 250 mg of I, 8 ml of CCl_4, and 1 ml of labelled CCl_4, and the chlorine exchange was assessed by the change in the activity of I (dissolved in 2.5 ml of benzene). No transfer of Cl^{36} took place in the absence of irradiation. The activity of α-I and β-I rose to a constant value of $\sim 1\%$ (arbitrary units) after 5 - 6

Card 1/2

APPROVED FOR RELEASE: 03/14/2001 CIA-RDP86-00513R001961820018-5"

"APPROVED FOR RELEASE: 03/14/2001 CIA-RDP86-00513R001961820018-5

hours, whilst that of γ-I increased to a constant ~0.6% after 8 - 10 hours. The activity of δ-I was 0.5% after 6 hours. At comparatively low doses of irradiation the processes involved are chiefly the chlorination of I and Cl-exchange, whilst further irradiation allows a 3rd reaction, loss of HCl by I (to form pentachlorocyclohexene), to proceed. The rise of the activity of I might be ascribed to a dynamic equilibrium between these processes, but is more probably due to: (1) radiolysis of CCl_4 to CCl_3 and Cl, formation of C_2Cl_6 and Cl_2, and recombination to CCl_4; (2) $RCl + \dot{Cl} \rightarrow HCl + R'Cl$, $R'Cl + \dot{Cl} \rightarrow R'\dot{Cl}$, $R'Cl + \dot{CCl_3} \rightarrow R''Cl$, $R'Cl + CCl_4 \rightarrow RCl + \dot{CCl_3}$; (3) $RCL + \dot{Cl} \rightarrow R\dot{Cl}$ (exchange reaction); (4) $R\dot{Cl} \rightarrow HCl + R'''Cl$ (dehydrohalogenation). Reaction (4) and chlorination reaction (2) are in agreement with the observed considerable evolution of HCl. There are 2 figures and 1 table.

ASSOCIATION: NII Goskomiteta, Soveta Ministrov SSSR po khimii (NII for Chemistry of the State Committee, Council of Ministers of the USSR)

APPROVED FOR RELEASE: 03/14/2001 CIA-RDP86-00513R001961820018-5"

"APPROVED FOR RELEASE: 03/14/2001 CIA-RDP86-00513R001961820018-5

YAKIMENKO, L.M.; KOKHANOV, G.N.; VESELOVSKAYA, I.Ye.; DZHAGATSPANYAN, R.V.

Investigating the electrochemical behavior of titanium and some other metals during the electrolysis of chloride solutions. Khim. prom. no.1:43-47 Ja '62. (MIRA 15:1)
(Titanium—Electric properties) (Chlorides) (Electrolysis)

APPROVED FOR RELEASE: 03/14/2001 CIA-RDP86-00513R001961820018-5"

"APPROVED FOR RELEASE: 03/14/2001 CIA-RDP86-00513R001961820018-5

YAKIMENKO, L.M.; DZHAGATSPANYAN, R.V.; VESELOVSKAYA, I.Ye.; KHODKEVICH, S.D.

Use of platinum-titanium anodes in the chlorine industry.
Khim.prom. no.10:728-735 O '62. (MIRA 15:12)
(Chlorine industry) (Electrodes, Titanium)
(Electrodes, Platinum)

APPROVED FOR RELEASE: 03/14/2001 CIA-RDP86-00513R001961820018-5"

"APPROVED FOR RELEASE: 03/14/2001 CIA-RDP86-00513R001961820018-5

YAKIMENKO, L.M.; IZOSENKOV, R.I.

Effect of the diameter of holes and of the extent of perforation of plate anodes on the voltage in horizontal mercury baths.
Zhur.prikl.khim. 35 no.2:342-350 F '62. (MIRA 15:2)
(Electrodes, Mercury)

APPROVED FOR RELEASE: 03/14/2001 CIA-RDP86-00513R001961820018-5"

"APPROVED FOR RELEASE: 03/14/2001 CIA-RDP86-00513R001961820018-5

KUZ'MIN, N.M.; BELYAYEV, V.P.; KALINACHENKO, V.R.; YAKIMENKO, L.M.

Chemical-spectral method of the analysis of high-purity alkalies. Zav. lab. 29 no.6:691-692 '63. (MIRA 16:6)

(Alkalies) (Spectrochemistry)

APPROVED FOR RELEASE: 03/14/2001 CIA-RDP86-00513R001961820018-5"

"APPROVED FOR RELEASE: 03/14/2001 CIA-RDP86-00513R001961820018-5

ACC NR: AT6022484 (N) SOURCE CODE: UR/0000/65/000/000/0338/0341

AUTHOR: Zaretskiy, S. A.; Suchkov, V. N.; Busse-Machukas, V. B.; Kisel'gof, Yu. S.; Yakimenko, L. M.; Alabyshev, A. F.

none

78
B+1

TITLE: On the preparation of chlorine, caustic soda, and alkali metals by electrolysis of fused media with a liquid lead cathode

SOURCE: Vsesoyuznoye soveshchaniye po fizicheskoy khimii rasplavlennykh soley. 2d, Kiev, 1963. Fizicheskaya khimiya rasplavlennykh soley (Physical chemistry of fused salts); trudy soveshchaniya. Moscow, Izd-vo Metallurgiya, 1965, 338-341

TOPIC TAGS: electrolysis, alkali metal, lead, liquid metal, chlorine, sodium hydroxide, CATHODE

ABSTRACT: In recent years, a new method of producing alkali metals has been in use in the Soviet Union: the metals are distilled out of a lead-alkali alloy prepared by electrolysis on a liquid lead cathode. However, the process is characterized by a recurring decrease of current efficiencies, particularly at high cathodic current densities. The article reviews studies made for the purpose of improving this method. It is shown that the electrolysis of alkali metal chlorides in molten salts with a circulating liquid lead cathode and distillation of the metal has many advantages over the electrolysis of aqueous solutions, namely: (a) pure sodium metal can be obtained at high current efficiencies, and pure caustic soda is thus produced without the necessity of using expensive mercury; (b) it is no longer necessary to build evaporation units and

Card 1/2

APPROVED FOR RELEASE: 03/14/2001 CIA-RDP86-00513R001961820018-5"

"APPROVED FOR RELEASE: 03/14/2001 CIA-RDP86-00513R001961820018-5

L 42141-66

ACC NR: AT6022484

units for melting caustic soda; (c) the process is carried out at current densities that are 30-35 times higher than in diaphragm electrolysis, and 6-7 times higher than in mercury electrolysis. Orig. art. has: 5 figures.

SUB CODE: 07/ SUBM DATE: 23Aug65/ ORIG REF: 007

Card 2/2

APPROVED FOR RELEASE: 03/14/2001 CIA-RDP86-00513R001961820018-5"

"APPROVED FOR RELEASE: 03/14/2001 CIA-RDP86-00513R001961820018-5

DZHAGATSPANYAN, R.V.; YAKIMENKO, L.M.; SINITSYN, V.I.; LYASKIN, Yu.G.; ZETKIN, V.I.; LIBMAN, B.Ya.

Radiochemical sulfochlorination of kerosine and synthine. Khim.prom. 41 no.4:7-11 Ap '65. (MIRA 18:8)

APPROVED FOR RELEASE: 03/14/2001 CIA-RDP86-00513R001961820018-5"

"APPROVED FOR RELEASE: 03/14/2001 CIA-RDP86-00513R001961820018-5

L 30055-00 EWT(1)/EWT(m)/EWT(t)/ETI IJP(c) GW/JD

ACC NR: AP6029717 SOURCE CODE: UR/0089/66/020/001/0084/0085

AUTHOR: Yakimenko, L. M.; Kuznets, E. D.; Tsionskiy, V. M.
ORG: none

45
B

TITLE: Tritium content in atmospheric fall-out over Moscow during 1962-1963

SOURCE: Atomnaya energiya, v. 20, no. 1, 1966, 84-85
TOPIC TAGS: tritium, radioactive fallout, fission product, atmospheric precipitation, radioactivity measurement

ABSTRACT: Natural tritium is oxidized and usually found on the ground as the radioactive component of rainwater, amounting to several T units (1 T unit is defined as 1 tritium atom per 10^{18} hydrogen atoms). As the result of the atmospheric thermonuclear tests, the T level increased by 2 orders of magnitude and at times it reached several thousands of T units. The factors that affect the T level of rainwater include the distance of the point from the site of the explosion, the distance from large oceanic masses, geographic location, and meteorological conditions. Fission products may reside long periods in the upper layers of the atmosphere. The T level of precipitations collected in Moscow was systematically determined, staring in December 1961. The samples were first enriched by a three-stage electrolytic process, the deuterium content determined by the drop method, and the tritium determined by its activity in hydrogen, obtained by decomposing the water in vacuum over Mg amalgam. The reporducibility of the method was ascertained by analyzing the same tap water samples repeatedly. The error of the measurements was ±10% and its sensitivity was 20 ± 10 T units. The tritium content of collected snow and rainwater samples increased from 523 in December 1961 to 5890 in July 1963, reaching values between 618 and 1125 T units in December 1963. Orig. art. has: 1 figure and 1 table. [NA]

SUB CODE: 18 / SUBM DATE: 27May65 / OTH REF: 006

Card 1/1 UDC: 551.577.7

0910 0195

APPROVED FOR RELEASE: 03/14/2001 CIA-RDP86-00513R001961820018-5"

"APPROVED FOR RELEASE: 03/14/2001 CIA-RDP86-00513R001961820018-5

L 09019-67 EWT(m) WE

ACC NR: AP6015121 (A) SOURCE CODE: UR/0064/66/000/005/0018/0020

AUTHOR: Dzhagatspanyan, R. V.; Lyaskin, Yu. G.; Filippov, M. T.; Sinitsin, V. I.; Yakimenko, L. M.; Globova, L. I.; Zotkin, V. I.

ORG: none

TITLE: Radiation chlorination of kerosene

SOURCE: Khimicheskaya promyshlennost', no. 5, 1966, 18-20

TOPIC TAGS: kerosene, gamma radiation, chlorination, photochemistry

ABSTRACT: Groznyy kerosene, from which the aromatic and unsaturated compounds were eliminated by extraction with liquid SO_2 was used during chlorination initiated by γ-radiation of Co^{60} made in the apparatus described by the authors previously (Khim. prom. no. 4, 247, 1965). After purification the kerosene had a molecular weight of 177. Chlorine was passed at the rate of 0.469 g/min in the reactor set into a thermostat with a controlled given temperature. The radiation source was introduced after 15 minutes. The chlorination products were purified from Cl_2 and HCl by passing a flow of nitrogen. The densities and refractive indexes were measured and the degree of chlorination was determined from the graphs, plotted experimentally, showing the dependence of density d_{20}^{20} and the refractory indexes n_D^{20} of the chlorinated products on their chlorine content. Kinetic curves (content of chlorine vs time in min) were

Card 1/2 UDC: 665.634-4 : 66.094.403.085.3

APPROVED FOR RELEASE: 03/14/2001 CIA-RDP86-00513R001961820018-5"

"APPROVED FOR RELEASE: 03/14/2001 CIA-RDP86-00513R001961820018-5

L 08659-67

ACC NR: AP6015121

plotted at various temperatures of chlorination (T = 20, 40, and 60C) and at various doses of radiation (P = 26.1, 7.3, 1.8, and 0.81 rad/sec). The dependence of the radiation-chemical efficiency coefficient G (number of atoms bound with carbon per 100 equivalent) on the radiation dose P was plotted from kinetic curves. The expression $G = 1{,}22 \cdot 10^9 e^{-\left(\frac{1600}{T} + 5{,}76 \cdot 10^{-2}[\%Cl]\right)} P^{-0.47}$ well describes the results obtained. (Disagreement of experimental and calculated values averaged ± 10.8%.) This equation can be used for designing a reactor for a temperature range of 0-100C, a radiation dose of 1-50 rad/sec, and a chlorine content of 5-60%. The apparent energy of activation was determined as 3200 cal/mole. The results of radiation chlorination were compared with those of photochemical chlorination and chlorination initiated by azo-bis-isobutyronitryl. It was shown that the same degree of chlorination was achieved more rapidly during radiation chlorination. At T = 20C and P = 26 rad/sec, the product containing Cl > 60% was obtained in 90 minutes during radiation chlorination. It took 23 and 21 hours to obtain the same product by photochemical chlorination and chlorination initiated by azo-bis-isobutyronitryl, respectively. Radiation chlorination also has other advantages: it depends little on temperature and is controlled by the radiation dose (easily controllable rate of chlorination), the rate of the radiation process does not depend on the color of the reacting mixture, and there is a much smaller danger of resinification because of an absence of local overheating. Orig. art. has: 3 fig., 4 formulas, and 1 table.

SUB CODE: 07/ SUBM DATE: none/ ORIG REF: 001/ OTH REF: 001

Card 2/2

APPROVED FOR RELEASE: 03/14/2001 CIA-RDP86-00513R001961820018-5"

"APPROVED FOR RELEASE: 03/14/2001 CIA-RDP86-00513R001961820018-5

BELYAYEV, V.P.; KALINACHENKO, V.R.; KUZ'MIN, N.M.; YAKIMENKO, L.M.; ARSHAUSKAYA, V.M.; RUBENCHIK, Yu.I.; SHEVKUN, I.G.; SHKLOVER, L.P.; BURAVLEV, Yu.M.; PEREPELKINA, M.A.; USTINOVA, V.I.; NEUYMINA, G.P.; ENGEL'SHT, V.S.; TRAPITSYN, N.F.; BULANOV, Yu.A.

Exchange of experience. Zav.lab. 28 no.6:685-687 '62. (MIRA 15:5)

1. Khimicheskiy zavod imeni Voykova (for Shklover). 2. Ural'skiy nauchno-issledovatel'skiy institut chernykh metallov (for Buravlev, Perepelkina, Ustinova, Neuymina). 3. Kirgizskiy gosudarstvennyy universitet (for Engel'sht, Trapitsyn, Bulanov). (Spectrum analysis)

APPROVED FOR RELEASE: 03/14/2001 CIA-RDP86-00513R001961820018-5"

"APPROVED FOR RELEASE: 03/14/2001 CIA-RDP86-00513R001961820018-5

BARILENKO, L.M.[translator]; FRIDMAN, V.Ya.[translator]; TSYPKIN, Ya.Z., doktor tekhn. nauk, red.; MIKHALEVSKIY, B.N., kand. ekon. nauk, red.; YAKIMENKO, L.P., red.; PRIDANTSEVA, S.V., tekhn. red.

[Control processes in the models of economic systems] Protsessy regulirovaniia v modeliakh ekonomicheskikh sistem; sbornik statei. Moskva, Izd-vo inostr. lit-ry, 1961. 292 p. (MIRA 15:3)
Translated articles.
(Economics, Mathematical) (Economics--Electromechanical analogies)
(Economics--Electronic data processing)

APPROVED FOR RELEASE: 03/14/2001 CIA-RDP86-00513R001961820018-5"

"APPROVED FOR RELEASE: 03/14/2001 CIA-RDP86-00513R001961820018-5

YAKIMENKO, L.V.

USSR/Electricity - Dielectrics G-2

Abs Jour : Ref Zhur - Fizika, No 3, 1957, No 6942

Author : Yakimenko, L.V.
Title : Behavior of Fiberglass Insulation at Very High Temperatures.

Orig Pub : Sv. statey nauch.-stud. o-va Mosk. energ. in-ta, 1956, vyp. 9, 148-151

Abstract : The high dielectric strength of fiberglass has been established in the temperature range from 400 to 500°. Recommendations are made concerning the use of fiberglass in the manufacture of wires with very high heat endurance.

Card : 1/1

APPROVED FOR RELEASE: 03/14/2001 CIA-RDP86-00513R001961820018-5"

"APPROVED FOR RELEASE: 03/14/2001 CIA-RDP86-00513R001961820018-5

YAKIMENKO, L.V., Cand Med Sci -- (diss) "Utilization of permanent electric current for the creation of the advantageous accumulation of artifically radioactive isotopes in tumors." Len 1958, 12 pp (Central Sci Res of X-ray Radiology Inst of Min of Health USSR) 150 copies (KL, 28-58, 112)

APPROVED FOR RELEASE: 03/14/2001 CIA-RDP86-00513R001961820018-5"

"APPROVED FOR RELEASE: 03/14/2001 CIA-RDP86-00513R001961820018-5

KHMELEVSKAYA, V.N.; YAKIMENKO, L.V.

Use of iron ionophoresis in the radiotherapy of pigmentary tumors. Uch.zap. KRROI 7:84-89'61. (MIRA 16:8)
(MELANOMA) (X RAYS—THERAPEUTIC USE) (IRON—THERAPEUTIC USE)

APPROVED FOR RELEASE: 03/14/2001 CIA-RDP86-00513R001961820018-5"

"APPROVED FOR RELEASE: 03/14/2001 CIA-RDP86-00513R001961820018-5

YAKIMENKO, L.V.

Use of direct electric current to achieve the accumulation of artificially radioactive isotopes mainly in tumors. Uch. zap. KRROI 7:128-136'61. (MIRA 16:8)
(CANCER RESEARCH) (ELECTROPHORESIS)
(RADIOISOTOPES—THERAPEUTIC USE).

APPROVED FOR RELEASE: 03/14/2001 CIA-RDP86-00513R001961820018-5"

"APPROVED FOR RELEASE: 03/14/2001 CIA-RDP86-00513R001961820018-5

YAKIMENKO, M. N.

S/908/62/000/000/004/008
B163/B180

AUTHORS: Gagin, Ye. N., Kaminir, L. B., Molchanov, S. S., Orlovskiy, G. N., Pisarev, V. Ya., Pyshkin, B. N., Fedotov, A. F., Yakimenko, M. N.

TITLE: System for electron injection into the chamber of the 680 Mev synchrotron

SOURCE: Uskoritel' elektronov na 680 Mev; sbornik statey. Ed. by Z. D. Andreyenko. Moscow, Gosatomizdat, 1962. 41-49

TEXT: The method is the same as in the Dubna 10 Bev proton synchrotron. Particles of constant energy are injected into the magnetic field of the first quadrant almost at right angles to the magnet radius; injection is stopped on reaching the equilibrium orbit of the chamber center, and the accelerating field is switched on direct injection is impossible, due to the design of the accelerator magnet and the high-voltage injector (injection energy 0.8 Mev). The electron beam from the Van de Graaff generator is first deflected by a magnetic 60° sector field and then injected by three pairs of deflection plates for a total deflection of

Card 1/2

APPROVED FOR RELEASE: 03/14/2001 CIA-RDP86-00513R001961820018-5"

"APPROVED FOR RELEASE: 03/14/2001 CIA-RDP86-00513R001961820018-5

30°, into the synchrotron chamber. Between the Van de Graaff exit and the magnetic deflector there is a magnetic corrector consisting of two pairs of magnetic polepieces to correct the eccentricity of the accelerated beam with respect to the geometrical axis. Directly behind the magnetic deflector is a 1.5 kv electric deflector which can be used to select short pulses of 1 μ sec. When switched off, the beam passes through a horizontal slit diaphragm. The alignment can be checked on two fluorescent screens. A double electrostatic corrector and two capacitors adjust the position and angle of the beam in the deflectors of the injector, which are in one of the straight sections of the accelerator. Each plate can be separately adjusted by translation and rotation from outside without destroying the vacuum. The radius of curvature of the orbit in this deflection system is 60 cm. The voltage across each pair of plates can be controlled separately. A rough estimate shows that an instability of $2 \cdot 10^{-3}$ rad in the radial and $5 \cdot 10^{-3}$ rad in the axial component of the injection angle produce an intensity loss of 20%. The instabilities of the supply sources are of the order of 0.01 to 0.06%. Circuit diagrams are given for the d.c. amplifier and the rectifier for the reference voltage. There are 5 figures and 1 table.

APPROVED FOR RELEASE: 03/14/2001 CIA-RDP86-00513R001961820018-5"

"APPROVED FOR RELEASE: 03/14/2001 CIA-RDP86-00513R001961820018-5

YAKIMENKO, M. N.

S/908/62/000/000/005/008
B163/B180

AUTHORS: Kaminir, L. B., Molchanov, S. S., Orlovskiy, G. N., Pyshkin, B. N., Fedotov, A. F., Yakimenko, M. N.

TITLE: Radiotechnical system of the 680 Mev accelerator

SOURCE: Uskoritel' elektronov na 680 Mev; sbornik statey. Ed. by Z. D. Andreyenko. Moscow, Gosatomizdat, 1962. 50-57

TEXT: In the first acceleration stage, when the electron velocity is still low, a broad-band accelerating device is used consisting of a 55 cm drift tube and a section of coaxial line, whose input conductance compensates the capacitance of the tube. The equivalent oscillatory circuit has a wave resistance of 65 ohm. The circuit is shunted by a resistance to broaden the transmission band. The acceleration per orbit is 250 v, the HF power 2 kw; in the first 10 msec the frequency increases from 19.2 - 20.4 mcps. In the second stage, acceleration occurs with a constant frequency of 20.4 Mcps, using a toroidal resonator with a Q-factor of 2000, and wave resistance 6 ohm. Acceleration per orbit is 15 kv, and HF power dissipation 20 kw. The radiation loss in the final stage is

Card 1/2

APPROVED FOR RELEASE: 03/14/2001 CIA-RDP86-00513R001961820018-5"

"APPROVED FOR RELEASE: 03/14/2001 CIA-RDP86-00513R001961820018-5

about 10 kev per orbit. The timing of the different accelerator elements (injection pulse, magnetising current, first and second accelerating stage) is controlled by pulses connected to delay circuits. A system of signal electrodes indicates the intensity and position of the beam during acceleration. There are 6 figures.

APPROVED FOR RELEASE: 03/14/2001 CIA-RDP86-00513R001961820018-5"

"APPROVED FOR RELEASE: 03/14/2001 CIA-RDP86-00513R001961820018-5

2

L 4942-66 EWT(d)/FBD/FSS-2/EWT(1)/EEC(k)-2/EWA(d)/T-2 GW/WS-2/WR

ACC NR: AP5025696 SOURCE CODE: UR/0286/65/000/018/0044/0044

AUTHORS: Brodovskiy, V. N.; Vvedenskiy, V. A.; Voronin, N. N.; Moiseyev, I. G.; Pogozhev, I. I.; Semenov, Yu. N.; Yakimenko, N. M.

ORG: none

TITLE: A device for controlling a radio telescope in azimuthal mounting. Class 21, 174689 [announced by Organization of the State Committee for Defense Engineering SSSR (Organizatsiya gosudarstvennogo komiteta po oboronnoy tekhnike SSSR)]

SOURCE: Byulleten' izobreteniy i tovarnykh znakov, no. 18, 1965, 44

TOPIC TAGS: azimuth, radio telescope, telescopic equipment, tracking telescope, tracking system, tracking, tracking computer

ABSTRACT: This Author Certificate presents a device for controlling a radio telescope in an azimuthal mounting. The device contains an input unit for the reference data in the equitorial coordinate system and electric following drives for turning the radio telescope in azimuth and elevation angles. The reliability and precision of tracking are increased. The unit contains a digital computer. The output of the elevation angle and azimuth angular mismatch are connected via

UDC: 621-503.53:522.61

Card 1/2

APPROVED FOR RELEASE: 03/14/2001 CIA-RDP86-00513R001961820018-5"

"APPROVED FOR RELEASE: 03/14/2001 CIA-RDP86-00513R001961820018-5

L 4942-66
ACC NR: AP5025696

memory registers and groups of amplifiers to the input of code-to-voltage converters. The second input of those converters, via a second group of amplifiers and corresponding memory registers, is connected to the outputs of the azimuth and elevation angle data speeds of the digital computer. The third input of the converters is connected to tachogenerators. These tachogenerators are mechanically connected to the azimuth and elevation angle axes of the radio telescope. To broaden the operating range of the azimuth angle pickup when the radio telescope passes from the clearly defined range, the output of an azimuth code correction selsyn is connected to the digital computer. This azimuth code correction selsyn is mechanically connected to the azimuth axis and is mounted on the turning circle, increasing the operating range of the radio telescope.

SUB CODE: DC, OP/ SUBM DATE: 25Jul64

Card 2/2

APPROVED FOR RELEASE: 03/14/2001 CIA-RDP86-00513R001961820018-5"

"APPROVED FOR RELEASE: 03/14/2001 CIA-RDP86-00513R001961820018-5

GRYAZNOV, A.I., METAL'NIKOV, Yu.N.; MOLCHANOV, S.S.; NOVIKOVA, G.V.; PETUKHOV, V.A. PISAREV, V.Ye.; PYSHKIN, B.N.; PANTYUSHKOVA, Ye.V.; SEDOV, M.G.; SHORIN, K.N.; YAKIMENKO, M.N.

The 680 Mev. synchrotron of the Physical Institute of the Academy of Sciences of the U.S.S.R. Atom. energ. 13 no.3:228-234 S '62. (MIRA 15:9)

(Synchrotron)

APPROVED FOR RELEASE: 03/14/2001 CIA-RDP86-00513R001961820018-5"

"APPROVED FOR RELEASE: 03/14/2001 CIA-RDP86-00513R001961820018-5

KULIKOV, O.F.; TEL'NOV, Yu.Ya.; FILIPPOV, Ye.I.; YAKIMENKO, M.N.

Compton effect on moving electrons. Zhur. eksp. i teor. fiz. 47 no.4:1591-1594 O '64. (MIRA 18:1)

1. Moskovskiy gosudarstvennyy universitet i Fizicheskiy institut imeni P.N. Lebedeva AN SSSR.

APPROVED FOR RELEASE: 03/14/2001 CIA-RDP86-00513R001961820018-5"

"APPROVED FOR RELEASE: 03/14/2001 CIA-RDP86-00513R001961820018-5

YAKIMENKO, N., radist (Krymskaya oblast').

Carrying out the decisions of general meetings. Sov. profsoiuzy 6 no.3:72-73 Mr '58. (MIRA 11:3)

1. Predsedatel' komiteta profsoyuza Arshintsevskogo rybozavoda.
(Crimea--Trade unions)

APPROVED FOR RELEASE: 03/14/2001 CIA-RDP86-00513R001961820018-5"

"APPROVED FOR RELEASE: 03/14/2001 CIA-RDP86-00513R001961820018-5

BOGOLYUBOV, B. P., prof.; YUMATOV, B. P., dotsent; KHODINOV, A. S., gornyy inzhener; GRIGORYANTS, E. A., inzh.; KORGUN, I. K., inzh.; KURKOV, P. A., inzh.; YAKIMENKO, N. D.

Determination of the thickness of roofs in open-cut mining of areas where there are old underground workings. Gor. zhur. no.11:21-23 N '62. (MIRA 15:10)

1. Moskovskiy institut stali i splavov (for Bogolyubov, Yumatov, Khodinov). 2. Noril'skiy gorno-metallurgicheskiy kombinat (for Grigoryants, Korgun, Kurkov, Yakimenko).

(Nikopol' region—Mining engineering)

APPROVED FOR RELEASE: 03/14/2001 CIA-RDP86-00513R001961820018-5"

"APPROVED FOR RELEASE: 03/14/2001 CIA-RDP86-00513R001961820018-5

L 27251-66 EWP(j)/EWP(k)/EWT(d)/EWT(m)/EWP(h)/T/EWP(1)/EWP(v) IJP(c) RM
ACC NR: AP6009868 (A) SOURCE CODE: UR/0413/66/000/004/0067/0067

AUTHORS: Kozlov, Yu. K.; Konovalov, Ye. K.; Shkarupa, A. V.; Yakimenko, N. G. 27 B

ORG: none

TITLE: Device for assembly of automobile tires. Class 39, No. 178975 announced by Omsk Tire Factory (Omskiy shinnyy zavod)

SOURCE: Izobreteniya, promyshlennyye obraztsy, tovarnyye znaki, no. 4, 1966, 67

TOPIC TAGS: tire, automotive industry

ABSTRACT: This Author Certificate presents a device for assembly of automobile tires, consisting of an assembly table and tire rim stretching mechanism. To increase the automation of the assembly, the latter is equipped with a device for removal and introduction of tubes, a mechanism for removal of the assembled tire, and a tire rim stretching mechanism equipped with a compressed air connection. The stretching mechanism is fastened to the assembly table on a movable vertical wall (see Fig. 1).

Card 1/2 UDC: 678.05:629.11.012.555

APPROVED FOR RELEASE: 03/14/2001 CIA-RDP86-00513R001961820018-5"

"APPROVED FOR RELEASE: 03/14/2001 CIA-RDP86-00513R001961820018-5

L 27251-66

ACC NR: AP6009868

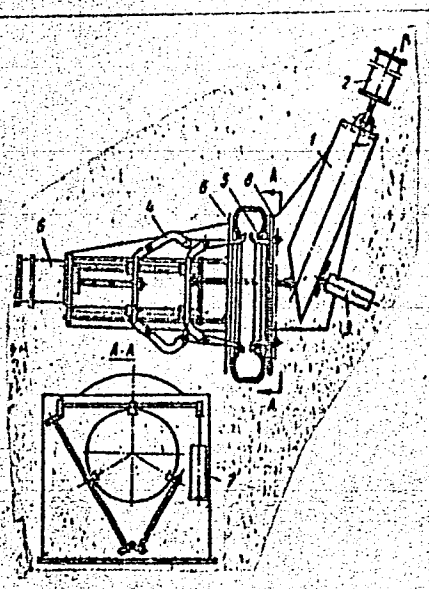

Fig. 1. 1 - directing channels; 2 - chamber piston; 3 - piston follower; 4 and 5 - levers; 6 and 7 - pneumatic connections for levers; 8 - vertical movable wall.

Orig. art. has: 1 figure.

SUB CODE: 13/ SUBM DATE: 19Nov64

Card 2/2

APPROVED FOR RELEASE: 03/14/2001 CIA-RDP86-00513R001961820018-5"

"APPROVED FOR RELEASE: 03/14/2001 CIA-RDP86-00513R001961820018-5

LINDORF, L.S., kand.tekhn.nauk; YAKIMENKO, N.I., inzh.

Use of a centrifugal relay for the protection of asynchronous motors from two-phase operation. Prom. energ. 18 no.8:13-14 Ag'63 (MIRA 16:9)

(Electric motors, Induction)

APPROVED FOR RELEASE: 03/14/2001 CIA-RDP86-00513R001961820018-5"

"APPROVED FOR RELEASE: 03/14/2001 CIA-RDP86-00513R001961820018-5

YAKIMENKO, N.K.

KUGUKALO, I.A., kandidat ekonomichnikh nauk, vidpovidal'niy redaktor; YAKIMENKO, N.K., redaktor; ZHUKOVS'KIY, A.D., tekhredaktor

[Irrigation system of the upper Ingulets River; organization and economy of water use] Verkhn'oinhulets'ka zroshuval'na systema; organizatsiia i ekonomika vodokorystuvannia. Kyiv, 1956. 101 p. (MLRA 10:5)

1. Akademiya nauk URSR, Kiyev. Institut ekonomiki.
(Ingulets Valley--Irrigation)

APPROVED FOR RELEASE: 03/14/2001 CIA-RDP86-00513R001961820018-5"

"APPROVED FOR RELEASE: 03/14/2001 CIA-RDP86-00513R001961820018-5

YAKIMENKO, N.M.

SA

B 64
l

2402. **Electromechanical amplifiers as an element in control systems.** YAKIMENKO, N. M. *Elektrichestvo* (*No.* 9) 20-6 (*Sept.*, 1948) *In Russian.*—The solution of the problem of stability in closed control systems utilizing amplidynes depends upon the differential relationship existing between the input and output magnitudes of the electro-mechanical amplifier. This relationship is examined for the case of an amplidyne used for the speed control of a motor, where the output quantity is the speed of rotation, similarly for the control of excitation of a generator, where the exciting current or a voltage proportional to it is the output quantity. The operational equations are developed and discussed; general considerations are illustrated by a numerical example for an amplidyne of 4 kW rating. B. H.

ASM-SLA METALLURGICAL LITERATURE CLASSIFICATION

APPROVED FOR RELEASE: 03/14/2001 CIA-RDP86-00513R001961820018-5"

"APPROVED FOR RELEASE: 03/14/2001 CIA-RDP86-00513R001961820018-5

YAKIMENKO, N.M.

YAKIMENKO, N. M., Cand. Tech Sci, & STANISLAVSKII, [illegible]. I., Engr.

Review of N. A. Livshits, D. V. Spitsyn, and A. V. Danilin's Book, "Theory and Calculation of elements of Automatic Systems."

Avtomatika i Telemekhanika, Vol. 6, No. 3, 1941.

APPROVED FOR RELEASE: 03/14/2001 CIA-RDP86-00513R001961820018-5"

"APPROVED FOR RELEASE: 03/14/2001 CIA-RDP86-00513R001961820018-5

YAKIMENKO, N.S.

SOV/133-59-1-15/23

AUTHORS: Rudoy, V.S., Alferova, N.S., Konovalov, V.F., Nesterova, N.N., Korobochkin, I.Yu, Kirvalidze, N.S., Dergach, A.Ya. and Yakimenko, N.S.

TITLE: The Technology of Production of Seamless Tubes from High-alloy Steels Alloyed with Boron (Tekhnologiya proizvodstva besshovnykh trub iz vysokolegirovannykh staley s boroma)

PERIODICAL: Stal', 1959, Nr 1, pp 68 - 73 (USSR)

ABSTRACT: Efforts made in 1956 to produce seamless tubes from high-alloy steels containing boron EI769 and EI770 gave negative results but in 1957 after some changes in the technology of smelting the metal, satisfactory results were obtained although there were no substantial changes in the chemical composition of the metal (%, numerator - data for 1957, denominator - for 1956):

	C	Si	Mn	Cr	Ni	W	Ti	B
EI769(Kh13N16TR)	0.08 / 0.07	0.55 / 0.64	1.65 / 1.73	13.7 / 13.7	15.7 / 14.9	- / -	0.81 / 0.90	0.009 / 0.0037
EI770(Kh13N18V2TR)	0.08 / 0.08	0.51 / 0.56	1.58 / 1.90	13.2 / 14.2	19.7 / 19.4	2.34 / 2.10	0.81 / 0.69	0.0023 / 0.0026

SOV/133-59-1-15/23

The Technology of Production of Seamless Tubes from High-alloy Steels Alloyed with Boron

The main characteristics of the technology of smelting metal in 1956 and 1957 differed as follows: a) in 1956, smelting was carried out in a 20-ton arc furnace from a charge containing 40-47% of stainless scrap (the remaining soft iron and fresh ferroalloys); oxygen was used during melting and oxidising period (500 - 700 m³ per heat); slag and metal were deoxidised before the addition of ferro-chromium and with the addition of ferrotitanium onto the metal freed from slag 15-20 min before tapping; b) in 1957 smelting was carried out in a 4.5-ton arc furnace from a fresh charge containing from 55 to 78% armco iron and corresponding ferroalloys without utilisation of scrap and oxygen; refining under a white slag with the addition of ferrotitanium after the removal of slag 8-10 min before tapping. In both cases the metal was cast in 500-kg ingots. The quality of tube billets 85 mm in diameter in 1957 was higher than in 1956. The microstructure of metal in both cases consisted of austenite with fine intermetallic inclusions, stretched in the form of lines along the direction of rolling. Piercing ability of the steels was tested on conical specimens (Ref 3). The determination of

Card2/5

plasticity and structure of steels was carried out within a temperature range 950 - 1 300 °C. Both steels were found to possess a comparatively high plasticity in the temperature range 975 - 1 075 °C (Figures 1 and 2), higher than for steel 1Kh18N9T. However, the plasticity of the latter steel increases with increasing temperature while for EI769 and 770 it sharply decreases. In hot torsion tests (Figures 3 and 4) the differences in the plasticity of the experimental steels was more pronounced. The resistance to deformation of both steels is similar (Figure 4) but at all temperatures is higher than for 1Kh18N9T steel. In hot torsion tests the loss of plasticity of the experimental steels was less pronounced than in piercing tests. In the first case, loss of plasticity was observed at 1 300 °C and in the second case at 1 250 °C. On the basis of the above investigation the following piercing practice for the industrial conditions was proposed: the temperature of billets before the mill 960-980 °C, piercing temperature 1 100 - 1 120 °C, in addition piercing at 1 140 - 1 150° and 1 180 - 1 200 °C was tested. Hot rolling of tubes

Card3/5

APPROVED FOR RELEASE: 03/14/2001 CIA-RDP86-00513R001961820018-5"

"APPROVED FOR RELEASE: 03/14/2001 CIA-RDP86-00513R001961820018-5

SOV/133-59-1-15/23

The Technology of Production of Seamless Tubes from High-alloy Steels Alloyed with Boron

under industrial conditions is described in some detail. The results obtained are given in Table 1. The inspection of tubes after pickling indicated that for steel EI769 the proposed piercing practice (temperature 1 100 - 1 120 °C) gave the best results. A large-scale rolling of tubes from this steel yielded 90% of good-quality products. Rolling of tubes from steel EI770 was tried at four different temperature ranges (temperature before piercing: 920-980; 980-1 000; 1 020-1 040 and 1 040-1 050 °C - Table 2). Optimum results were obtained at a temperature before piercing of 950 °C. 95% of good-quality tubes was obtained. Mechanical properties of hot-rolled tubes before and after hardening are given in Table 3. Hardening of tubes was carried out from 1 100 °C. The dependence of the consumption of energy, power and heating-up of the metal during piercing on the temperature of the metal before piercing is shown in Figure 6. It is concluded that: 1) boron-containing steels of austenitic class EI769 and EI770 possess a lowered temperature at the beginning of incipient melting of grain boundaries; their optimum plasticity is shifted towards lower temperatures; they

Card4/5

possess high resistance to deformation and heat up intensively during piercing. The resistance to deformation of these steels is higher than of 1Kh18N9T steel which makes their piercing more difficult, particularly that with increasing temperature their plasticity decreases (unlike 1Kh18N9T steel). The developed methods of rolling these steels give quality hot-rolled tubes from EI769 steel without repairs and from EI770 steel with repairs which are usually permitted for high-alloy tubes, providing the metal is produced from fresh charges by the improved (1957) technology. The results of measurements of power consumption and heating up can be utilised for an approximate evaluation of these parameters during piercing of other austenitic steels. There are 6 figures, 3 tables and 6 Soviet references.

Card5/5

APPROVED FOR RELEASE: 03/14/2001 CIA-RDP86-00513R001961820018-5"

"APPROVED FOR RELEASE: 03/14/2001 CIA-RDP86-00513R001961820018-5

YAKIMENKO, Nikolay Stepanovich; PESHKOV, V.P., red.

[Methods of increasing the sugar content of beets and the yield of sugar per hectare] Puti povysheniia sakharistosti svekly i uvelicheniia sbora sakhara s gektara. Tambov, Tambovskoe knizhnoe izd-vo, 1963. 71 p. (MIRA 17:9)

APPROVED FOR RELEASE: 03/14/2001 CIA-RDP86-00513R001961820018-5"

"APPROVED FOR RELEASE: 03/14/2001 CIA-RDP86-00513R001961820018-5

AKIMOVA, Ye.P.; RUDOY, V.S.; SHEVCHENKO, L.N.; NESTEROVA, N.N.; Prinimali uchastiye: VASILENKO, S.I.; ZUYEV, I.I.; VIL'YAMS, O.S.,; LAGUTINA, R.V.; DERGACH, A.Ya.; KITANENKO, V.P.; KIRVALIDZE, N.S.; YAKIMENKO, N.S.; SAMOYLENKO, V.D.

Effect of the method of manufacturing EI847 steel on the quality of tubes. Stal' 21 no.12:1113-1114 D '61. (MIRA 14:12)

1. Ukrainskiy nauchno-issledovatel'skiy trubnyy institut (for Akimova, Rudoy, Shevchenko, Nesterova). 2. Nikopol'skiy yuzhnotrubnyy zavod (for Vasilenko, Zuyev, Vil'yams, Lagutina, Dergach, Kitanenko, Kirvalidze, Yakimenko, Samoylenko).
(Steel, Stainless—Electrometallurgy)
(Pipe mills—Quality control)

APPROVED FOR RELEASE: 03/14/2001 CIA-RDP86-00513R001961820018-5"

"APPROVED FOR RELEASE: 03/14/2001 CIA-RDP86-00513R001961820018-5

KOSUL'NIKOV, R.M., inzh.; KIRVALIDZE, N.S., inzh.; YAKIMENKO, N.S., inzh.; FRIDMAN, G.Ye., inzh.; KOVALEV, R.G., inzh.

Eliminating high wall thickness variations in steel tube extrusion on vertical mechanical presses. Stal' 25 no.2: 143-146 F '65. (MIRA 18:3)

1. Nikopol'skiy Yuzhnotrubnyy zavod.

APPROVED FOR RELEASE: 03/14/2001 CIA-RDP86-00513R001961820018-5"

"APPROVED FOR RELEASE: 03/14/2001 CIA-RDP86-00513R001961820018-5

SOLODKIY, I.F. [Solodkyi, I.F.], starshiy nauchn. sotr.; YAKIMENKO, O.P., kand. sel'khoz. nauk; PARKHOMENKO, O.I., red.; SHEVCHENKO, M.G. [Shevchenko, M.H.], tekhn. red.

[How to increase the yield of millet and buckwheat] IAk zbil'shyty vrozhai prosa i hrechky. Kharkiv, Kharkivs'ke knyzhove vydvo, 1961. 39 p. (MIRA 14:11)
(Millet) (Buckwheat)

APPROVED FOR RELEASE: 03/14/2001 CIA-RDP86-00513R001961820018-5"

"APPROVED FOR RELEASE: 03/14/2001 CIA-RDP86-00513R001961820018-5

YAKIMENKO, O.V. [IAkymenko, O.V.], inzh.

Machinery for harvesting hay and straw. Mekh. sil'. hosp. 12 no. 5:3-5 My '61. (MIRA 14:5)

(Hay--Harvesting) (Straw)

APPROVED FOR RELEASE: 03/14/2001 CIA-RDP86-00513R001961820018-5"

"APPROVED FOR RELEASE: 03/14/2001 CIA-RDP86-00513R001961820018-5

YAKIMENKO, O.V. [IAkymenko, O.V.], inzh.

KRVN-2,5 cultivator and fertilizer spreader. Mekh. sil'. hosp. 12 no. 6:14 Je '61. (MIRA 14:5)
(Cultivators) (Fertilizer spreaders)

APPROVED FOR RELEASE: 03/14/2001 CIA-RDP86-00513R001961820018-5"

"APPROVED FOR RELEASE: 03/14/2001 CIA-RDP86-00513R001961820018-5

BARANOV, A.F., kand.med.nauk; MAROCHKINA, I.A., vrach; KONOPIKHINA, T.A., vrach; KOLOKOLOVA, N.V., kand.med.nauk; YAKIMENKO, O.V., kand. med.nauk; PANOVA, L.M., kand.med.nauk

Treatment of onychomycoses with keratolytic and fungicidal plasters. Vest.derm.i ven. no.1:65-67 '62. (MIRA 15:1)

1. Mikologichkoye otdeleniye Moskovskoy gorodskoy bol'nitsy No.23 imeni Medsantrud (for Marochkina, Kononikhina). 2. Poliklinika No.1 Ministerstva zdravookhraneniya RSFSR (for Kolokolova). 3. TSentral'naya poliklinika No.1 Ministerstva oborony SSSR (for Yakimenko). 4. TSentral'naya poliklinika No.1 Ministerstva zdravookhraneniya RSFSR (for Panova).
(DERMATOMYCOSIS) (NAILS (ANATOMY)—DISEASES)
(PLASTERS (PHARMACY))

APPROVED FOR RELEASE: 03/14/2001 CIA-RDP86-00513R001961820018-5"

"APPROVED FOR RELEASE: 03/14/2001 CIA-RDP86-00513R001961820018-5

ASHMARIN, Yu. Ya.; BUROV, G. P.; BABANIN, A. V.; YAKIMENKO, O. V.; MAKARENKO, V. N.

Local use of steroid hormones in treating some skin diseases. Vest. derm. i ven. no.2:71-73 '62. (MIRA 15:2)

(SKIN—DISEASES) (ADRENOCORTICAL HORMONES)

APPROVED FOR RELEASE: 03/14/2001 CIA-RDP86-00513R001961820018-5"

"APPROVED FOR RELEASE: 03/14/2001 CIA-RDP86-00513R001961820018-5

YAKIMENKO, Petr Ivanovich; BOCHKOV, Viktor Mikhaylovich; AKHEL'ROD, I.S., red.

[Construction of bridges [Stroitel'stvo mostov. Moskva, Transport, 1964. 285 p. (MIRA 17:8)

APPROVED FOR RELEASE: 03/14/2001 CIA-RDP86-00513R001961820018-5"

"APPROVED FOR RELEASE: 03/14/2001 CIA-RDP86-00513R001961820018-5

YAKIMENKO, S.

Each smelting job should be rapid Moskva, Profizdat, 1952. 47 p. Novatory sotsialisticheskogo proizvodstva (55-41078)

TN740.I 16

APPROVED FOR RELEASE: 03/14/2001 CIA-RDP86-00513R001961820018-5"

"APPROVED FOR RELEASE: 03/14/2001 CIA-RDP86-00513R001961820018-5

YAKIMENKO, T.M.

Importance of exotoxin and allergen of the hemolytic streptococcus in the pathogenesis of scarlet fever [with summary in English]. Pediatriia 36 no.10:32-38 O '58 (MIRA 11:11)

1. Iz kafedry infektsionnykh bolezney detskogo vozrasta (zav. -dotsent N.G. Stepina) i kafedry mikrobiologii (zav. - prof. S.M. Minervin) Odesskogo meditsinskogo instituta imeni N.I. Pirogova (dir. - zaslyzhenyy deyatel' nauki prof. I.Ya. Deyneka).
(SCARLET FEVER, etiol. & pathogen.
hemolytic streptococcus exotoxin & allergen (Rus))

The phagocytic activity of blood leucocytes was investigated in 111 children with scarlet fever. Changes in phagocytic activity indicated a definite role of the exotoxin in the pathogenesis of the early period of scarlet fever, whereas the significance of the allergen which is the thermostabile fraction of the toxin was established in the 2nd period of the disease. The phagocytic index (to Dick II streptococcus) and the Dick reaction indicated that the antitoxic immunity was less in children treated with penicillin than in the non-treated.
Anigstein - Galveston, Tex. (IV,7)

APPROVED FOR RELEASE: 03/14/2001 CIA-RDP86-00513R001961820018-5"

"APPROVED FOR RELEASE: 03/14/2001 CIA-RDP86-00513R001961820018-5

YAKIMENKO, T. M.: Cand Master Med Sci (diss) -- "The significance of the phagocyte index in scarlatina of children". Odessa, 1959. 15 pp (Odessa State Med Inst im Pirogov), 200 copies (KL, No 6, 1959, 147)

APPROVED FOR RELEASE: 03/14/2001 CIA-RDP86-00513R001961820018-5"

"APPROVED FOR RELEASE: 03/14/2001 CIA-RDP86-00513R001961820018-5

YAKIMENKO, T.M. [IAkymenko, T.M.]; KOBZEVA, M.G. [Kobzieva, M.H.]

Combined hemolytic action of Proteus hemotoxins and some representatives of the microflora of the intestines. Mikrobiol. zhur. 27 no.5:63-67 '65. (MIRA 18:10)

1. Odesskiy meditsinskiy institut im. Pirogova.

APPROVED FOR RELEASE: 03/14/2001 CIA-RDP86-00513R001961820018-5"

"APPROVED FOR RELEASE: 03/14/2001 CIA-RDP86-00513R001961820018-5

L 39854-66 EWT(m)/EWA(d)/EWP(t)/ETI IJP(c) JD/WB/GD-2

ACC NR: AP6018101 SOURCE CODE: UR/0365/66/002/001/0108/0110

AUTHOR: Sharnin, A. A.; Balandina, L. I.; Yakimenko, T. R.

ORG: Ural Scientific Research Chemical Institute (Ural'skiy nauchno-issledovatel'skiy khimicheskiy institut)

TITLE: Corrosion of certain metals and alloys in molten aluminum sulfate

SOURCE: Zashchita metallov, v. 2, no. 1, 1966, 108-110

TOPIC TAGS: aluminum compound, alloy, corrosion, aluminum, copper, lead, iron, titanium, steel, bronze, corrosion resistant metal, corrosion resistance/AD aluminum, MI copper, AZh9-4 bronze, OF6.60.15 bronze, S-1 lead, VT-1 titanium, 1Kh18N9T steel, E1-448 steel, E1-432 steel, E1-943 steel

ABSTRACT: To find a corrosion-resisting material for making crystallizers which are severely corroded in production, tests were conducted to determine the rate of corosion of various metals and alloys in molten aluminum sulfate. Plate specimens were washed with a soda solution and alcohol and suspended on teflon supports. The tested materials were AD aluminum, MI copper, bronzes AZh9-4 and OF6.6-0.15, S-1 lead, gray iron, VT-1 titanium, and steels 1Kh18N9T, E1-448, E1-432 and E1-943. As the most resistant of the tested materials, steel E1-943 and copper MI were tested to determine corrosion resistance of weld joints. Specimens of steel E1-943 were welded with electrodes from the same grade of steel (nominal composition of welding rod in %: C ≤ 0.06, Mn ≤ 0.6 Si ≤ 0.6, S ≤ 0.2, P ≤ 0.03, Cr = 22-25, Ni = 26-29, Cu = 2.5-3.5, and Ti = 56 [sic]. Welding copper specimens was done with copper electrodes. Surfaces of the weld joints were ground even with the base metal. The corrosion resistance of weld joints of steel E1-943 is approximately the same as the base metal. For copper they corrode at a significantly higher rate than the base metal. Weld joints of copper and steel E1-943, heat-affected zones and all remaining surfaces of the specimens were

Card 1/2 UDC: 620.193.4

APPROVED FOR RELEASE: 03/14/2001 CIA-RDP86-00513R001961820018-5"

"APPROVED FOR RELEASE: 03/14/2001 CIA-RDP86-00513R001961820018-5

L 39854-66

ACC NR: AP6018101

corroded uniformly. According to the corrosion scale of weld joints, the weld joints of steel E1-943 are in the category of the sufficiently resistant, while joints of copper are in the category of relatively resistant. Orig. art. has: 2 tables /JPRS/

SUB CODE: 13, 11 / SUBM DATE: 03Jul65 / ORIG REF: 003

Card 2/2

APPROVED FOR RELEASE: 03/14/2001 CIA-RDP86-00513R001961820018-5"

"APPROVED FOR RELEASE: 03/14/2001 CIA-RDP86-00513R001961820018-5

YAKIMENKO, T.V.

TSYMBAL, M.M.; YAKIMENKO, T.V.

Seeds - Disinfection

Using feed steamer ZK-0.5 for single-phase thermal disinfection of wheat and barley seeds.
Sel. i. sem. 19 no. 5, 1952

Monthly List of Russian Accessions, Library of Congress, July 1952. Unclassified.

APPROVED FOR RELEASE: 03/14/2001 CIA-RDP86-00513R001961820018-5"

"APPROVED FOR RELEASE: 03/14/2001 CIA-RDP86-00513R001961820018-5

YAKIMENKO, V.D.

Designing administration and general services buildings for enterprises of the mining and ore dressing industry. Adm.-byt. komb. ugol'. shakht no.5:39-44 '62. (MIRA 17:8)

1. Gosudarstvennyy institut po proyektirovaniyu predpriyatiy zhelezorudnoy, margantsevoy, flyusovoy promyshlennosti i promyshlennosti ogneupornogo syr'ya i plavikovogo shpata.

APPROVED FOR RELEASE: 03/14/2001 CIA-RDP86-00513R001961820018-5"

"APPROVED FOR RELEASE: 03/14/2001 CIA-RDP86-00513R001961820018-5

KUZENKOVA, M.A.; YAKIMENKO, V.D.

High-temperature dilatometer for measuring the shrinkage during sintering. Porosh. met. 5 no.9:76-80 S '65. (MIRA 18:9)

1. Institut problem materialovedeniya AN UkrSSR.

APPROVED FOR RELEASE: 03/14/2001 CIA-RDP86-00513R001961820018-5"

"APPROVED FOR RELEASE: 03/14/2001 CIA-RDP86-00513R001961820018-5

RYZHKOV, S. V.; ROSTOV, M. L.; ROMANOV, V. N.; YAKIMENKO, V. G.

Use of radioactive gold (Au^{198}) in radical operations for stomach cancer. Vop. onk. 8 no.2:51-56 '62. (MIRA 15:2)

1. Iz kliniki fakul'tetskoy khirurgii No. 1 (nach. - prof. V. M. Sitenko) Voyenno-meditsinskoy ordena Lenina akademii im. S. M. Kirova.

(STOMACH—CANCER) (GOLD—ISOTOPES)

APPROVED FOR RELEASE: 03/14/2001 CIA-RDP86-00513R001961820018-5"

"APPROVED FOR RELEASE: 03/14/2001 CIA-RDP86-00513R001961820018-5

YAKIMENKO, V.I.

USSR/Farm Animals. Cattle Q-2

Abs Jour : Ref Zhur - Biol., No 8, 1958, No 35628

Author : Yakimenko V.I.
Inst : Not Given
Title : The Dairy Cattle Breeding of the Northern Districts of the Omsk Oblast' and the Measures Proposed for Its Further Development.

Orig Pub : Tr. Novosib. s.-kh. inOta, b. g., II, 66-74

Abstract : No abstract

Card : 1/1

APPROVED FOR RELEASE: 03/14/2001 CIA-RDP86-00513R001961820018-5"

"APPROVED FOR RELEASE: 03/14/2001 CIA-RDP86-00513R001961820018-5

34206
S/057/62/032/002/006/022
B104/B102

24.6714

AUTHOR: Yakimenko, V. L.

TITLE: Oscillations of a cold plasma with two types of ions

PERIODICAL: Zhurnal tekhnicheskoy fiziki, v. 32, no. 2, 1962, 168-179

TEXT: A homogeneous cylinder of cold plasma consisting of electrons and two types of ions in an external homogeneous magnetic field directed parallel to the cylinder axis is studied. Collisions and other dissipative processes are neglected. If the pressure in the plasma is zero, the linearized equations of motion have the form:

$$\partial\vec{v}_e/\partial t = -\frac{e}{m}\left(\vec{E} + \frac{1}{c}\left[\vec{v}_e\vec{B}_o\right]\right), \quad \partial\vec{v}_{iq}/\partial t = \frac{Z_q e}{M_q}\left(\vec{E} + \frac{1}{c}\left[\vec{v}_{iq}\vec{B}_o\right]\right),$$

where v_e, v_{iq} are the velocities of the electrons and ions of the type q. $\vec{E}$, $\vec{B}$, $\vec{j}$, and v depend on z, φ and t as $\exp(i\psi)$, where $\psi = kz + b\varphi + \omega t$.

Card 1/4

APPROVED FOR RELEASE: 03/14/2001 CIA-RDP86-00513R001961820018-5"

"APPROVED FOR RELEASE: 03/14/2001 CIA-RDP86-00513R001961820018-5

34206
S/057/62/032/002/006/022
B104/B102

Oscillations of a cold plasma ...

$$\varepsilon_{\alpha\beta}=\begin{pmatrix} \varepsilon & ig & 0 \\ -ig & \varepsilon & 0 \\ 0 & 0 & \eta \end{pmatrix},$$

$$\left.\begin{aligned} &\varepsilon=1+\frac{\omega_{0e}^2}{\omega_e^2-\omega^2}+\frac{\omega_{0e}^2}{n}\sum_q\frac{Z_q n_{iq} s_q}{\omega_{iq}^2-\omega^2}, \\ &g=\frac{\omega_e\omega_{0e}^2}{\omega}\left(\frac{1}{\omega_e^2-\omega^2}-\frac{1}{n}\sum_q\frac{Z_q n_{iq} s_q^2}{\omega_{iq}^2-\omega^2}\right); \quad \eta=1-\frac{\omega_{0e}^2(1+\bar{s})}{\omega^2}, \\ &\left(\omega_{0e}=\left(\frac{4\pi ne^2}{m}\right)^{1/2}, \quad \bar{s}=\frac{1}{n}\sum_q Z_q n_{iq} s_q\right), \end{aligned}\right\} \qquad (5)-(6)$$

$$j_\alpha=i\omega\frac{\varepsilon_{\alpha\beta}-\delta_{\alpha\beta}}{4\pi}E_\beta.$$

hold for the tensor of the dielectric constant. The dispersion equation

$$\left(\varepsilon-\frac{k^2c^2}{\omega^2}\right)\left(\varepsilon-\frac{k^2c^2}{\omega^2}\frac{\omega_0^2-\omega^2}{k_r^2c^2+\omega_0^2-\omega^2}\right)-g^2=0, \qquad (9)$$

Card 2/4

APPROVED FOR RELEASE: 03/14/2001 CIA-RDP86-00513R001961820018-5"

"APPROVED FOR RELEASE: 03/14/2001 CIA-RDP86-00513R001961820018-5

34206
S/057/62/032/002/006/022
B104/B102

Oscillations of a cold plasma ...

and the expression

$$N^2 = \frac{k^2c^2}{\omega^2} = \frac{(\varepsilon^2 - g^2 - \varepsilon\eta)\sin^2\theta + 2\varepsilon\eta \pm [(\varepsilon^2 - g^2 - \varepsilon\eta)^2 \sin^4\theta + 4\eta^2 g^2 \cos^2\theta]^{1/2}}{2(\varepsilon \sin^2\theta + \eta \cos^2\theta)}, \quad (10)$$

for the refractive index are obtained from (5) and the Maxwell equations. $k = k\cos\theta$, $k_r = k\sin\theta$. This dispersion equation has the same form as that for plane waves. It holds for waves propagating in any direction to the magnetic field. In a detailed study of the zeros and the singularities of the refractive index it is demonstrated that a new frequency with anomalous dispersion occurs between two ion cyclotron frequencies. In a study of the oscillation amplitudes of the particle velocities it is demonstrated that for ordinary waves for which the refractive index has singularities at the ion cyclotron frequencies, in the ordinary wave both types of ions move in antiphase. They always are in phase in the extraordinary wave. The author thanks D. A. Frank-Kamenetskiy for his help. There are 3 figures and 9 references: 3 Soviet and 6 non-Soviet. The three references to English-language publications read as follows: T. H. Stix. Phys. Rev., 106, 1146, 1957; P. L. Auer, H. Hurwitz, R. D. Miller. Phys. Fluids, 1, 501, 1958; S. J. Buchsbaum. Phys. Fluids, 3, 418,

Card 3/4

APPROVED FOR RELEASE: 03/14/2001 CIA-RDP86-00513R001961820018-5"

"APPROVED FOR RELEASE: 03/14/2001 CIA-RDP86-00513R001961820018-5

34206
S/057/62/032/002/006/022
B104/B102

Oscillations of a cold plasma ...

1960.

SUBMITTED: February 24, 1961 (initially), August 28, 1961 (after revision)

Card 4/4

APPROVED FOR RELEASE: 03/14/2001 CIA-RDP86-00513R001961820018-5"

"APPROVED FOR RELEASE: 03/14/2001 CIA-RDP86-00513R001961820018-5

YAKIMENKO, V.L.

AID Nr. 980-12 31 May

ATTENUATION OF MAGNETOACOUSTIC WAVES IN PLASMA (USSR)

Demidov, V. P., D. A. Frank-Kamenetskiy, and V. L. Yakimenko. Zhurnal tekhnicheskoy fiziki, v. 33, no. 4, Apr 1963, 398-405.

S/057/63/033/004/005/021

In an investigation of absorption processes of magnetoacoustic waves propagating at an angle to the constant magnetic field with frequencies higher than ion-cyclotron and much lower than electron-cyclotron ($\omega_i < \omega \ll \omega_e$) in totally ionized thermal plasma, the ion-cyclotron and electron-Cerenkov absorption, as well as absorption resulting from electron-ion collisions, were calculated from general expressions for components of dielectric constant tensor in plasma with Maxwell velocity distribution. It was found that when the ratio of the electronic gas pressure to the magnetic pressure (β_e) is less than 10^{-4}, the ion-cyclotron absorption in the neighborhood of ω_i harmonics is larger than electron-Cerenkov absorption and much smaller than absorption resulting from collisions. If

Card 1/2

APPROVED FOR RELEASE: 03/14/2001 CIA-RDP86-00513R001961820018-5"

"APPROVED FOR RELEASE: 03/14/2001 CIA-RDP86-00513R001961820018-5

AID Nr. 980-12. 31 May

ATTENUATION OF MAGNETOACOUSTIC WAVES [Cont'd] S/057/63/033/004/005/021

$\beta_e \sim 10^{-4}$-10^{-3}, at lower ω_1 harmonics the ion-cyclotron and Cerenkov absorption can be of the same order; at higher harmonics, however, the Cerenkov absorption is much larger than the ion-cyclotron absorption. At $n = 10^{13} cm^{-3}$, $T = 1$ ev, $H_0 = 10^3$ oe, and $\beta_e = 4 \cdot 10^{-4}$, the absorption resulting from collisions exceeds the Cerenkov and ion-cyclotron absorption. With an increase in temperature ($\beta_e \sim 10^{-2}$-10^{-1}) the collision absorption decreases and, at higher harmonics, the Cerenkov absorption plays the main role. [JA]

Card 2/2

APPROVED FOR RELEASE: 03/14/2001 CIA-RDP86-00513R001961820018-5"

"APPROVED FOR RELEASE: 03/14/2001 CIA-RDP86-00513R001961820018-5

L 10230-63 EWT(1)/EWG(k)/BDS/EEC(b)-2--AFFTC/ASD/ESD-3/AFWL/SSD--
Pz-4/Pi-4/Po-4--AT/IJP(C)
ACCESSION NR: AP3000046 S/0056/63/044/005/1534/1543

AUTHOR: Yakimenko, V. L.

TITLE: Absorption of waves in a plasma (quasi-linear approximation)

SOURCE: Zhurnal eksper. i teoret. fiziki, v. 44, no. 5, 1963, 1534-1543

TOPIC TAGS: Wave absorption in plasma, magnetic-sound waves

ABSTRACT: The absorption of electromagnetic waves propagating at an arbitrary angle to a fixed magnetic field in a plasma is analyzed by means of the quasi-linear theory. Account is taken of the interaction between particles and waves, which leads to a redistribution of the particle velocities, causing damping which differs from that appearing in the linear theory. General formulas are obtained for the change in the distribution function and absorption of an arbitrary wave. The results are applied to a magnetic-sound wave propagating at an angle that is not close to 90° with respect to the fixed magnetic field. The electron Cerenkov absorption, the electron cyclotron absorption, and absorption at harmonics of the ion-cyclotron frequency are computed. It is shown that at high wave amplitudes

Card 1/2

APPROVED FOR RELEASE: 03/14/2001 CIA-RDP86-00513R001961820018-5"

"APPROVED FOR RELEASE: 03/14/2001 CIA-RDP86-00513R001961820018-5

L 10230-63

ACCESSION NR: AP3000046

the particles are redistributed in velocity and the absorption is determined by the frequency of collisions that disturb the quasi-stationary state. If the wave amplitude is of the order of the thermal noise, the absorption is given by the formulas of the linear theory. "The author is indebted to A. A. Vedenov and Ye. P. Velikhov for valuable discussion and comments." Orig. art. has: 31 formulas.

ASSOCIATION: none

SUBMITTED: 21Sep62 DATE ACQ: 12Jun63 ENCL: 00

SUB CODE: PH NR REF SOV: 009 OTHER: 002

Card 2/2

APPROVED FOR RELEASE: 03/14/2001 CIA-RDP86-00513R001961820018-5"

"APPROVED FOR RELEASE: 03/14/2001 CIA-RDP86-00513R001961820018-5

LATYSH, V. N.; YAKIMENKO, V. Ya. (Leningrad)

Diagnostic value of the diphenylamine reaction in rheumatism. Vrach. delo no.3:45-52 Mr '62. (MIRA 15:7)

1. Klinika gospital'noy terapii I (nachal'nik - deystvitel'nyy chlen AMN SSSR, prof. N. S. Molchanov) Voyenno-meditsinskoy ordena Lenina Akademii imeni S. M. Kirova.

(DIPHENYLAMINE) (RHEUMATIC FEVER)

APPROVED FOR RELEASE: 03/14/2001 CIA-RDP86-00513R001961820018-5"

"APPROVED FOR RELEASE: 03/14/2001 CIA-RDP86-00513R001961820018-5

YAKIMENKO, YE,

Poultry

Mechanical plucking of waterfowl down. Mias. ind. SSSR 23 no. 1, 1952.

Monthly List of Russian Accessions, Library of Congress, August 1952. Unclassified

APPROVED FOR RELEASE: 03/14/2001 CIA-RDP86-00513R001961820018-5"

"APPROVED FOR RELEASE: 03/14/2001 CIA-RDP86-00513R001961820018-5

YAKIMENKO, Ye.; MAL'KOV, A.

Useful suggestion. Mias. ind. SSSR no.2:50 '57. (MIRA 10:5)

1. Shadrinskiy ptitsekombinat.
(Meat industry--Equipment and supplies)

APPROVED FOR RELEASE: 03/14/2001 CIA-RDP86-00513R001961820018-5"

"APPROVED FOR RELEASE: 03/14/2001 CIA-RDP86-00513R001961820018-5

YAKIMENKO, Ye.

Efficiency promoters improve the production. Mias.ind.SSSR 31 no.1:32 '60. (MIRA 13:5)

1. Glavnyy inzhener Shadrinskogo ptitsekombinata.
(Shadrinsk--Packing houses)
(Shadrinsk--Poultry plants)

APPROVED FOR RELEASE: 03/14/2001 CIA-RDP86-00513R001961820018-5"

"APPROVED FOR RELEASE: 03/14/2001 CIA-RDP86-00513R001961820018-5

YAKIMENKO, Ye.V.; ZIBLIKEVICH, S.L.

Plant tests of nonionogenic demulsifiers. Nefteper. i neftekhim. no.9:9-10 '64. (MIRA 17:10)

1. Omskiy neftepererabatyvayushchiy zavod.

APPROVED FOR RELEASE: 03/14/2001 CIA-RDP86-00513R001961820018-5"

"APPROVED FOR RELEASE: 03/14/2001 CIA-RDP86-00513R001961820018-5

SHEVLYAKOV, V.A.; GROIZOVSKAYA, R.I.; YAKIMENKO, Ye.V.; UL'YANOVA, L.F.

Density of methanol aqueous solutions at various temperatures. Nefteper. i neftekhim. no.2:30-32 '63. (MIRA 17:1)

1. Omskiy neftepererabatyvayushchiy zavod.

APPROVED FOR RELEASE: 03/14/2001 CIA-RDP86-00513R001961820018-5"