"APPROVED FOR RELEASE: 03/15/2001 CIA-RDP86-00513R001963520009-6

9.3190
5.2200

25976
S/539/60/000/031/009/014
E071/E135

AUTHORS: Stroganov, V.F., and Zakharov, E.K.

TITLE: A thermographic investigation of the reaction of formation of calcium and barium tungstenates

PERIODICAL: Moscow. Khimiko-tekhnologicheskiy institut. Trudy, No.31, 1960. Issledovaniya v oblasti khimii i tekhnologii elektrovakuumnykh materialov, pp.60-65

TEXT: Since literature data on the formation of alkali earth tungstenates of the type Me_3WO_6 differ, the authors checked the possibility of the formation of the above salt by the thermal analysis method, using apparatus of the Kurnakov type. The procedure consisted of recording the thermal curves for pure barium and calcium carbonate and their mixtures with various ratios of the components, and subsequently recording the thermal curves of a mixture of carbonates with tungsten trioxide. The extent of the reaction could be assessed from the position and depth of the peaks. It was found that the reaction between barium and calcium carbonates and tungsten trioxide begins at about 300 °C and proceeds with the evolution of heat. On subsequent

Card 1/2

APPROVED FOR RELEASE: 03/15/2001 CIA-RDP86-00513R001963520009-6"

"APPROVED FOR RELEASE: 03/15/2001 CIA-RDP86-00513R001963520009-6

25976

A thermographic investigation of ... S/539/60/000/031/009/014
E071/E135

heating to 1100 °C tungsten anhydride reacts only with an amount of carbonates which corresponds to the formation of $MeWO_4$, where Me - an alkali earth metal. This was observed on the basis of peaks of polymorphic transformation of carbonates which disappear only when the ratio of tungsten atoms to alkali earth metals is 1:1. The problem of the possibility of formation of tungstenates with a different ratio of oxides at a higher temperature was not solved as the apparatus used could not operate at higher temperatures.

There are 4 figures, 1 table and 8 references: 1 Soviet, 4 German and the following 3 English:

Ref.1: H.P. Rocksby, E. Steward. J. Appl. Phys., V.22, 358 (1951).
Ref.2: E. Hensley, J. Affleck. J. Appl. Phys., V.22, 359 (1951).
Ref.3: R.C. Hughes, P.P. Coppola, H.T. Evans. J. Appl. Phys., V.23, 635 (1952).

Card 2/2

APPROVED FOR RELEASE: 03/15/2001 CIA-RDP86-00513R001963520009-6"

"APPROVED FOR RELEASE: 03/15/2001 CIA-RDP86-00513R001963520009-6

ZAKHAROV, E.M.

EMF of a galvanic cell in the nonequilibrium state. Zhur. fiz. khim. 38 no.12:2950-2953 D '64. (MIRA 18:2)

APPROVED FOR RELEASE: 03/15/2001 CIA-RDP86-00513R001963520009-6"

"APPROVED FOR RELEASE: 03/15/2001 CIA-RDP86-00513R001963520009-6

ZAKHAROV, E.T., agronom

Let's organize plant pest and disease protection. Zemledelie 6 no.4:86-87 Ap '58. (MIRA 11:4)
(Plants, Protection of)

APPROVED FOR RELEASE: 03/15/2001 CIA-RDP86-00513R001963520009-6"

"APPROVED FOR RELEASE: 03/15/2001 CIA-RDP86-00513R001963520009-6

ZAKHAROV, F.

ZAKHAROV, F.

U.S.S.R.-Mongolia-China. Grazhd. av. 17 no.8:34 Ag '60. (MIRA 13:9)

(Airlines)

APPROVED FOR RELEASE: 03/15/2001 CIA-RDP86-00513R001963520009-6"

"APPROVED FOR RELEASE: 03/15/2001 CIA-RDP86-00513R001963520009-6

KHOMUTOV, M.; ZAKHAROV, F.

Order of the Ministry of Public Health of the U.S.S.R. No. 24, January 21, 1959. Azerb.med.zhur. no.5:83-86 My '59. (MIRA 12:8)

1. Zamestitel' Ministra zdravookhraneniya SSSR (for Khomutov)
2. Nachal'nik Glavnoy meditsinskoy inspektsii (for Zakharov)
(PRESCRIPTION WRITING) (DRUGS--LAWS AND LEGISLATION)

APPROVED FOR RELEASE: 03/15/2001 CIA-RDP86-00513R001963520009-6"

"APPROVED FOR RELEASE: 03/15/2001 CIA-RDP86-00513R001963520009-6

ZAKHAROV, F.

Regulation governing the chief stomatologists of the Ministry of Public Health of the Union and autonomous republics and territory, province, and municipal public health departments. Stomatologiia 36 no.5:78-79 S-O '57. (MIRA 11:1)

1. Nachal'nik Glavnoy meditsinskoy inspektsii.
(PUBLIC HEALTH) (MOUTH--DISEASES)

APPROVED FOR RELEASE: 03/15/2001 CIA-RDP86-00513R001963520009-6"

"APPROVED FOR RELEASE: 03/15/2001 CIA-RDP86-00513R001963520009-6

ZAKHAROV, F., mashinist tsentral'nogo uglesosa.

A guarantee of success. Mast.ugl. 5 no.3:9 Mr '56. (MLRA 9:7)
(Kuznetsk Basin--Hydraulic mining)

APPROVED FOR RELEASE: 03/15/2001 CIA-RDP86-00513R001963520009-6"

"APPROVED FOR RELEASE: 03/15/2001 CIA-RDP86-00513R001963520009-6

ZAKHAROV, F. A.

Grazhdanskii vozdushnyi flot nashei rodiny. Moskva, 1950.
Title tr.: The civil fleet of our fatherland.

NCF

SO: Aeronautical Sciences and Aviation in the Soviet Union, Library of Congress, 1955.

APPROVED FOR RELEASE: 03/15/2001 CIA-RDP86-00513R001963520009-6"

"APPROVED FOR RELEASE: 03/15/2001 CIA-RDP86-00513R001963520009-6

ZAKHAROV, F.G.; DERYABINA, V.L.

Results and prospects in consolidating polyclinics and hospitals. Sov. zdrav. 14 no.6:26-32 N-D '55. (MLRA 9:2)

1. Iz Instituta organizatsii zdravookhraneniya i istorii meditsiny imeni N.A. Semashko AMN SSSR (dir. Ye. D. Ashurkov)
(HOSPITALS,
unification of hosp. & polyclinics in Russia)

APPROVED FOR RELEASE: 03/15/2001 CIA-RDP86-00513R001963520009-6"

"APPROVED FOR RELEASE: 03/15/2001 CIA-RDP86-00513R001963520009-6

ZAKHAROV, F.G., redaktor; BAGDASAROV, A.A., redaktor

[A collection of instructions on the organization of procurement and transfusion of blood and its components] Sbornik instruktsii po organizatsii zagotovki i perelivaniiu krovi i ee komponentov. Pod red. F.G.Zakharova i A.A.Bagdasarova. Moskva, Medgiz, 1957. 290 p. (MIRA 10:11)

1. Russia (1923- U.S.S.R.) Ministerstvo zdravookhraneniya (BLOOD--TRANSFUSION)

APPROVED FOR RELEASE: 03/15/2001 CIA-RDP86-00513R001963520009-6"

"APPROVED FOR RELEASE: 03/15/2001 CIA-RDP86-00513R001963520009-6

ZAKHAROV, F.G.

Medical service to industrial workers and measures for lowering morbidity with temporary disability. Sov.zdrav. 16 no.1:9-13 Ja '57. (MLRA 10:2)

1. Chlen kollegii Ministerstva zdravookhraneniya SSSR.
(INDUSTRIAL HYGIENE
control of morbidity and of temporary loss of work capacity)

APPROVED FOR RELEASE: 03/15/2001 CIA-RDP86-00513R001963520009-6"

"APPROVED FOR RELEASE: 03/15/2001 CIA-RDP86-00513R001963520009-6

ZAKHAROV, F.G.

Let's persistently improve working and living conditions. Sov. zdrav. 16 no.7:3-6 Jl '57. (MIRA 10:11)

1. Chlen kollegii Ministerstva zdravookhraneniya SSSR.
(INDUSTRIAL HYGIENE,
in Russia (Rus))
(ECONOMICS,
living cond. in Russia (Rus))

APPROVED FOR RELEASE: 03/15/2001 CIA-RDP86-00513R001963520009-6"

"APPROVED FOR RELEASE: 03/15/2001 CIA-RDP86-00513R001963520009-6

GUMAROVA, F.G.; GOSTEVA, A.G.; TULEGENOV, Z.K.; MAKASHEVA, S.U.; POLOSUKHIN, A.P.; MUSABEKOV, A.M.; DANILOV, Yu.S.; NIGMATULIN, M.A.; ZAKHAROV, F.G.; LUZINA, Z.T.; NEPESOV, T.I.; STASYUNAS, I.P.; ISABEKOV, O.I.; SARSENBAYEVA, K.; KATSYURA, V.T.; LENOVSKIY, A.S.; AKHMEDOV, K.Yu.; SUBKHANBERDIN, S.Kh.; KISLITSINA, N.P.; POLIKARPOV, S.V.; ZAIROV, K.S.; APSATAROV, A.A.; NOVOSEL'TSEV, V.N.; PETROV, N.N.; KHOMUTOV, M.V.; GALUSTYAN, A.S.; ARTYKOV, A.Ye.; DZHANDIL'DIN, N.D.; KOVRIGINA, M.D.; BEYSEBAYEV, M.; BUBLIK, V.N.; CHERNYSH, A.M.

Discussion on the report of S.R.Karynbaev, Minister of Public Health of the Kazakh S.S.R., on the status and improvement of medical care. Zdrav.Kazakh. 17 no.4/5 '57. (MIRA 12:6)

1. Zav. Alma-Atinskim oblastnym zdravotdelom (for Gumarova). 2. Vrach bol'nitsy g.Leninogorska Vostochno-Kazakhstanskogo oblzdravotdela (for Gosteva). 3. Zav. Karagandinskim oblastnym otdelom zdravookhraneniya (for Tulegenov). 4. Zav.Kzyl-Ordinskim oblastnym otdelom zdravookhraneniya (for Makasheva). 5. Vitse-prezident AN KazSSR (for Polosukhim). 6. Zav.Aktyubinskim oblastnym otdelom zdravookhraneniya (for Musabekov) 7. Ministr zdravookhraneniya Kirgizii (for Danilov).

(Continued on next card)

APPROVED FOR RELEASE: 03/15/2001 CIA-RDP86-00513R001963520009-6"

"APPROVED FOR RELEASE: 03/15/2001 CIA-RDP86-00513R001963520009-6

GUMAROVA, F.G.---(continued) Card 2.

8. Zav.Vostochno-Kazakhstanskim oblastnym otdelom zdravookhraneniya (for Higmatulin). 9. Chlen kollegii Ministerstva zdravookhraneniya SSSR (for Zakharov). 10. Zav.Kustanayskim oblastnym otdelom zdravookhraneniya (for Luzina). 11. Ministr zdravookhraneniya Turkmenskoy SSR (for Nepesov). 12. Zav.sel'skim vrachebnym uchastkom Priirtyshskogo rayona Pavlodarskoy oblasti (for Stasyunas). 13. Glavnyy vrach Kapal'skoy rayonnoy bol'nitsy Taldy-Kurganskoy oblasti (for Isabekov). 14. Zav. zhenotdelom Yuzhno-Kazakhstanskogo obkoma partii (for Sarsenbayeva). 15. Zav. Dzhambulskim oblastnym otdelom zdravookhraneniya (for Katsyuba). 16. Glavnyy vrach Alma-Atinskogo oblastnogo tuberkuleznogo dispansera (for Lenovskiy). 17. Ministr zdravookhraneniya Tadzhikskoy SSR (for Akhmedov). 18. Nachal'nik Kazaptekoupravleniya (for Subkhanberdin).

(Continued on next card)

APPROVED FOR RELEASE: 03/15/2001 CIA-RDP86-00513R001963520009-6"

"APPROVED FOR RELEASE: 03/15/2001 CIA-RDP86-00513R001963520009-6

GUMAROVA, F.G.---(continued) Card 3.

19. Zav. Semipalatinskim oblastnym otdelom zdravookhraneniya (for Kislitsina). 20. Predsedatel' respublikanskogo komiteta soyuza medrabotnikov (for Polikarpov). 21. Zam. ministra zdravookhraneniya Uzbekskoy SSR (for Zairov). 22. Zav.Alma-Atinskim gorodskim otdelom zdravookhraneniya (for Apsatarov). 23. Zav. Severo-Kazakhstanskim oblastnym otdelom zdravookhraneniya (for Novosel'tsev). 24. Zav.rayzdravotdelom Shortandinskogo rayona Akmolinskoy oblasti (for Petrov). 25. Zav. ministra zdravookhraneniya Soyuza SSR (for Khomutov). 26. Zav.ministra zdravookhraneniya ArmSSR (for Galustyan). 27. Predsedatel' Komiteta fizicheskoy kul'tury i sporta pri Sovete Ministrov KazSSR (for Artykov). 28. Sekretar' TSentral'nogo Komiteta Kommunisticheskoy partii Kazakhstana (for Dzhandil'din). 29. Ministr zdravookhraneniya Sovetskogo Soyuza (for Kovrigina). 30. Pervyy zamestitel' predsedatelya Soveta Ministrov KazSSR (for Beysebayev). 31. Uchastkovyy vrach Kustanayskoy oblasti (for Bublik). 32. Zam.predsedatelya Obshchestva Krasnogo Kresta Kazakhstana (for Chernysh).

(KAZAKHSTAN--PUBLIC HEALTH)

APPROVED FOR RELEASE: 03/15/2001 CIA-RDP86-00513R001963520009-6"

"APPROVED FOR RELEASE: 03/15/2001 CIA-RDP86-00513R001963520009-6

ZAKHAROV, F.G.

Using novocillin for treating pneumonia. Sov.med. 21 Supplement:3 '57. (MIRA 11:2)

1. Iz kliniki gospital'noy terapii Voyenno-meditsinskoy akademii imeni S.M.Kirova.
(PNEUMONIA) (ANTIBIOTICS)

APPROVED FOR RELEASE: 03/15/2001 CIA-RDP86-00513R001963520009-6"

"APPROVED FOR RELEASE: 03/15/2001 CIA-RDP86-00513R001963520009-6

ALEKSANDROV, Oleg Alekseyevich; DERYABINA, V.L.; MATSKO, B.M.; ZAKHAROV, F.G., red.

[Organization of operations in consolidated hospitals] Ob organizatsii raboty v ob"edinennykh bol'nitsakh, pod red. F.G.Zakharova. Moskva, Medgiz, 1958. 82 p. (MIRA 12:4)
(HOSPITALS--ADMINISTRATION)

APPROVED FOR RELEASE: 03/15/2001 CIA-RDP86-00513R001963520009-6"

"APPROVED FOR RELEASE: 03/15/2001 CIA-RDP86-00513R001963520009-6

ZAKHAROV, F.G., mayor med. sluzhby

Apparatus for oxygen-aerosol therapy. Voen.-med. zhur. no.1:57-90 Ja '59. (MIRA 12:3)

(OXYGEN, ther. use
appar. for group aerosol ther. (Rus))

APPROVED FOR RELEASE: 03/15/2001 CIA-RDP86-00513R001963520009-6"

"APPROVED FOR RELEASE: 03/15/2001 CIA-RDP86-00513R001963520009-6

ZAKHAROV, F.G. (Moskva).

Improvement in protecting the health of workers in industrial plants. Sov. zdrav. 18 no.2:15-21 '59. (MIRA 12:1)
(INDUSTRIAL HYGIENE in Russia (Rus))

APPROVED FOR RELEASE: 03/15/2001 CIA-RDP86-00513R001963520009-6"

"APPROVED FOR RELEASE: 03/15/2001 CIA-RDP86-00513R001963520009-6

ZAKHAROV, F.G.; DONIGEVICH, M.I (Moskva)

Prospects for the development of flying medical services.
Sov. zdrav. 19 no. 54-57 '60. (MIRA 13:8)
(AERONAUTICS IN MEDICINE)

APPROVED FOR RELEASE: 03/15/2001 CIA-RDP86-00513R001963520009-6"

"APPROVED FOR RELEASE: 03/15/2001 CIA-RDP86-00513R001963520009-6

KULAKOV, V.I., kand.med.nauk; PLETNEVA, V.A.; ZAKHAROV, F.G.

Spontaneous duodeno-colonic fistula in peptic ulcer of the duodenum. Vest.khir. no.9:130-131 '61. (MIRA 15:3)

1. Iz 1-y terapevticheskoy kliniki usovershenstvovaniya vrachey (nach. - prof. P.I. Shilov) Voyenno-meditsinskoy ordena Lenina akademii im. S.M. Kirova i khirurgicheskogo otdeleniya Leningradskogo ordena Lenina voyennogo gospitalya.
(FISTULA) (DUODENUM--ULCERS)

APPROVED FOR RELEASE: 03/15/2001 CIA-RDP86-00513R001963520009-6"

"APPROVED FOR RELEASE: 03/15/2001 CIA-RDP86-00513R001963520009-6

ZAKHAROV, F.G. (Moskva)

Active members of the Society of the Red Cross and the Red Half-Moon in the village in the fight for sanitation. Med. sestra 20 no.7:38-42 Jl '61. (MIRA 14:10)
(PUBLIC HEALTH, RURAL)

APPROVED FOR RELEASE: 03/15/2001 CIA-RDP86-00513R001963520009-6"

"APPROVED FOR RELEASE: 03/15/2001 CIA-RDP86-00513R001963520009-6

DONIGEVICH, Mechslav Ivanovich; ZAKHAROV, F.G., red.; SVETLYAKOV, A.G., red.; CHULKOV, I.F., tekhn. red.

[Organization of airborne public health service in the U.S.S.R.] Organizatsiia sanitarnoi aviatsii v SSSR, Moskva, Medgiz, 1963. 98 p. (MIRA 16:7)
(AERONAUTICS IN MEDICINE)

APPROVED FOR RELEASE: 03/15/2001 CIA-RDP86-00513R001963520009-6"

"APPROVED FOR RELEASE: 03/15/2001 CIA-RDP86-00513R001963520009-6

ZAKHAROV, Fedor Galaktionovich; GAVRILOV, N.I., red.; MATVEYEVA, M.M., tekhn. red.

[Medical care for workers of industrial enterprises] Meditsinskoe obsluzhivanie trudiashchikhsia promyshlennykh predpriiatii. Moskva, Medgiz, 1963. 233 p. (MIRA 16:5)
(LABOR AND LABORING CLASSES—MEDICAL CARE)

APPROVED FOR RELEASE: 03/15/2001 CIA-RDP86-00513R001963520009-6"

"APPROVED FOR RELEASE: 03/15/2001 CIA-RDP86-00513R001963520009-6

KOZLOV, V.S., dotsent; ZAKHAROV, F.M.

Methods for eliminating sterility in cows on a state farm. Veterinariia 40 no.5:43-44 My '63. (MIRA 17:1)

1. Alma-Atinskiy zooveterinarnyy institut (for Kozlov). 2. Glavnyy veterinarnyy vrach sovkhoza "Aksay", Alma-Atinskoy oblasti (for Zakharov).

APPROVED FOR RELEASE: 03/15/2001 CIA-RDP86-00513R001963520009-6"

"APPROVED FOR RELEASE: 03/15/2001 CIA-RDP86-00513R001963520009-6

URAL'SKIY, N. (Vladimirskaya oblast'); SHPIKOV, B. (Odessa); ZAKHAROV, G. (selo Amga, Yakutskaya ASSR); VAL'T, S. (Riga); ZAYTSEV, A., (Sumy); NUDEL', I. (Vinnitsa); OVSYANNIKOV, L. (Irbit, Sverdlovskaya oblast'); NAZAROV, G. (Bulyukta, Kirgizskaya SSR); MOLCHANOV, I., (Grodno); SHADZEVICHUS, M.

Our readers' letters. Pozh.delo 5 no.1:28-29 '59. (MIRA 11:12)

1. Nachal'nik rayonnoy Dobrovol'noy pozharnoy druzhiny (for Zakharov). 2. Nachal'nik otryada okhrany elevatora Dobrovol'noy pozharnoy druzhiny (for Ovsyannikov).
(Fire prevention)

APPROVED FOR RELEASE: 03/15/2001 CIA-RDP86-00513R001963520009-6"

"APPROVED FOR RELEASE: 03/15/2001 CIA-RDP86-00513R001963520009-6

ZAKHAROV, G., doktor voyennykh nauk, general-mayor voysk svyazi

Along the roads of war. Radio no.2:3 F '65. (MIRA 18:4)

APPROVED FOR RELEASE: 03/15/2001 CIA-RDP86-00513R001963520009-6"

"APPROVED FOR RELEASE: 03/15/2001 CIA-RDP86-00513R001963520009-6

ZAKHAROV, G., kand.ekon.nauk

Some economic problems in the repair of motor vehicles in Siberia and the Far East. Avt.transp. 41 no.10:26-27 O '63. (MIRA 16:10)

APPROVED FOR RELEASE: 03/15/2001 CIA-RDP86-00513R001963520009-6"

"APPROVED FOR RELEASE: 03/15/2001 CIA-RDP86-00513R001963520009-6

ZAPALOV, I.; SAUL'SKIY, V.; ZAKHAROV, G.

Training specialists. Avt. transp. 42 no. 5:48-49 My '64. (MIRA 17:5)

1. Direktor Ul'yanovskogo uchebnogo kombinata (for Zakharov).

APPROVED FOR RELEASE: 03/15/2001 CIA-RDP86-00513R001963520009-6"

"APPROVED FOR RELEASE: 03/15/2001 CIA-RDP86-00513R001963520009-6

ZAKHAROV, G., general-mayor voysk svyazi

Radio operators of the First Tank Army. Radio no.7:9-10 Jl '63.

1. Byvshiy nachal'nik voysk svyazi 1-y tankovoy armii.
(Radio operators)
(Radio--Installation in tanks)

APPROVED FOR RELEASE: 03/15/2001 CIA-RDP86-00513R001963520009-6"

"APPROVED FOR RELEASE: 03/15/2001 CIA-RDP86-00513R001963520009-6

ZAKHAROV, G.

Use efficiently the manpower and equipment in cementing and flushing wells. Neftianik 5 no.9:23-24 S '60. (MIRA 13:9)

1. Nachal'nik otdela truda i zarplaty tresta Tuymazaburneft'.
(Oil well cementing)

APPROVED FOR RELEASE: 03/15/2001 CIA-RDP86-00513R001963520009-6"

"APPROVED FOR RELEASE: 03/15/2001 CIA-RDP86-00513R001963520009-6

ZAKHAROV, G.

Industrial hygiene and factory newspapers and periodicals.
Okhr.truda i sots.strakh. no.3:94-95 Mr '59. (MIRA 12:4)
(Industrial hygiene)

APPROVED FOR RELEASE: 03/15/2001 CIA-RDP86-00513R001963520009-6"

"APPROVED FOR RELEASE: 03/15/2001 CIA-RDP86-00513R001963520009-6

ZAKHAROV, G.

"The new in the development of machine-construction drawings. Tr. from the Russian."

p.38 (Ratsionalizatsiia, Vol. 7, no. 2, Feb. 1957, Sofiia, Bulgaria)

Monthly Index of East European Accessions (EEAI) LC, Vol. 7, No. 8, August 1958

APPROVED FOR RELEASE: 03/15/2001 CIA-RDP86-00513R001963520009-6"

"APPROVED FOR RELEASE: 03/15/2001 CIA-RDP86-00513R001963520009-6

ZAKHAROV, G.

A good example. Okhr.truda i sots.strakh. no.5:93-95 N '58. (MIRA 12:1)

(Chelyabinsk--Industrial hygiene)

APPROVED FOR RELEASE: 03/15/2001 CIA-RDP86-00513R001963520009-6"

"APPROVED FOR RELEASE: 03/15/2001 CIA-RDP86-00513R001963520009-6

POTEMKIN, P. (Novosibirsk); ZAKHAROV, G. (Novosibirsk)

"Production costs in the heavy industry of the U.S.S.R." by R. S. Livshits. Reviewed by P. Potemkin, G. Zakharov. Vop. ekon. no.12:111-113 D '62. (MIRA 16:1)

(Costs, Industrial)
(Livshits, R. S.)

APPROVED FOR RELEASE: 03/15/2001 CIA-RDP86-00513R001963520009-6"

"APPROVED FOR RELEASE: 03/15/2001 CIA-RDP86-00513R001963520009-6

ZAKHARCV, G.A., inzh.

Regulation and control of the combustion process in marine boilers. Sudostroenie 30 no.5:26-29 My '64.
(MIRA 17:6)

APPROVED FOR RELEASE: 03/15/2001 CIA-RDP86-00513R001963520009-6"

"APPROVED FOR RELEASE: 03/15/2001 CIA-RDP86-00513R001963520009-6

ZAKHAROV, G.A.

Effect of ring macrostructure on the quality and efficiency of bearings. Metalloved. i term. obr. met. no.7:18-20 Jl '63. (MIRA 16:7)

1. Saratovskiy podshipnikovyy zavod.
(Bearing metals--Metallography)
(Forging)

APPROVED FOR RELEASE: 03/15/2001 CIA-RDP86-00513R001963520009-6"

"APPROVED FOR RELEASE: 03/15/2001 CIA-RDP86-00513R001963520009-6

ZAKHAROV, G.A., inzh.

Analysis of the static properties of control systems. Sudostroenie 29 no.6:12-15 Je '63. (MIRA 16:7)
(Marine engines) (Automatic control)

APPROVED FOR RELEASE: 03/15/2001 CIA-RDP86-00513R001963520009-6"

"APPROVED FOR RELEASE: 03/15/2001 CIA-RDP86-00513R001963520009-6

Country : USSR
Category : Farm Animals Q
The Honeybee.
Abs. Jour : RZHBiol., No. 3, 1959, No. 12119

Author : Zakharov, G. A.
Institution :
Title : Bees in the Pollination of Black Currant (Ribes nigrum) and Gooseberry (Grossularial).

Orig Pub. : Pchelovodstvo, 1958, No 5, 29-33

Abstract : According to the observations of the author, honeybees comprise 90 percent of the total number of pollinating insects in the pollination of black currants. The bees visit the gooseberry more eagerly than currants; if the rows of gooseberry are situated nearby, the current's crop increases 20-50 percent.

Card: 1/1

APPROVED FOR RELEASE: 03/15/2001 CIA-RDP86-00513R001963520009-6"

"APPROVED FOR RELEASE: 03/15/2001 CIA-RDP86-00513R001963520009-6

ZAKHAROV, G.A., kand.ekon.nauk

Planning repairs. Mashinostroitel' no.2:13-15 F '64.
(MIRA 7:3)

APPROVED FOR RELEASE: 03/15/2001 CIA-RDP86-00513R001963520009-6"

"APPROVED FOR RELEASE: 03/15/2001 CIA-RDP86-00513R001963520009-6

ZAKHAROV, G.A.

Effect of additional pollination with foreign pollen on increasing the yield of black currants. Agrobiologiia no. 3:416-462 My-Je '60. (MIRA 13:12)

1. Nauchno-issledovatel'skiy institut sadovodstva imeni I.V. Michurina, g.Michurinsk.
(Currants) (Fertilization of plants)

APPROVED FOR RELEASE: 03/15/2001 CIA-RDP86-00513R001963520009-6"

"APPROVED FOR RELEASE: 03/15/2001 CIA-RDP86-00513R001963520009-6

SLAVIN, S.V., doktor ekon. nauk; GRANIK, G.I., kand. ekon. nauk; LOGINOV, V.P.; MIKHAYLOV, S.V.; SHAPALIN, B.F., kand. geogr. nauk; AVAKYAN, M.I., nauchnyy sotr.; ZAKHAROV, G.A., nauchnyy sotr.; KAMENITSER, L.S., nauchnyy sotr.; TITOVA, N.I., nauchnyy sotr.; TYUMENEV, A.P., nauchnyy sotr.; CHUGUNOV, B.I., starshiy nauchnyy sotr.; KOGAN, I.L.; MESHKOVSKAYA, L.V., starshiy inzh.; LUKIN, I.I.; FAYERSHTEYN, R.I.; Prinimali uchastiye: Agranat, G.A., kand. geogr. nauk, red.; FUZANOVA, V.F., kand. geogr. nauk, red.; KUPRIYANOV, A.B., nauchnyy sotr., red.; SOBOLEV, Yu.A., red. izd-va; TIKHOMIROVA, S.G., tekhn. red.

[Problems in developing the productive forces of Magadan Province] Problemy razvitiia proizvoditel'nykh sil Magadanskoi oblasti. Moskva, Izd-vo Akad. nauk SSSR, 1961. 301 p. (MIRA 15:1)

1. Akademiya nauk SSSR. Sovet po izucheniyu proizvoditel'nykh sil. 2. Glavnyye inzhenera proyekta "Dal'stroyproyekt" (for Kogan, Fayershteyn). 3. Institut ekonomiki Akademii nauk SSSR (for Chugunov). 4. Energoupravleniye Magadanskogo Soveta narodnogo khozyaystva (for Meshkovskaya). 5. Nachal'nik Oblastnogo otdela po delam stroitel'stva i arkhitektury Magadanskoy oblasti (for Lukin).
(Magadan Province--Industries) (Magadan Province--Economic policy)

APPROVED FOR RELEASE: 03/15/2001 CIA-RDP86-00513R001963520009-6"

"APPROVED FOR RELEASE: 03/15/2001 CIA-RDP86-00513R001963520009-6

YAPTEV, N. N., Eng.; ZAKHAROV, G. A.

Bearings (Machinery)

New design for tanks to be used in hardening ball and roller bearings. Podshipnik No. 2, 1953.

9. Monthly List of Russian Accessions, Library of Congress, June 1953, Uncl.

APPROVED FOR RELEASE: 03/15/2001 CIA-RDP86-00513R001963520009-6"

"APPROVED FOR RELEASE: 03/15/2001 CIA-RDP86-00513R001963520009-6

LIBERMAN, L.A., inzh.; ZAKHAROV, G.A., inzh.

Layouts and calculations for steel molds. Bet. i zhel.-bet. 8 no.8:368-371 Ag '62. (MIRA 15:9)
(Precast concrete)

APPROVED FOR RELEASE: 03/15/2001 CIA-RDP86-00513R001963520009-6"

"APPROVED FOR RELEASE: 03/15/2001 CIA-RDP86-00513R001963520009-6

NIKOLAYEV, V.I., kand.tekhn.nauk; ZAKHAROV, G.A., inzh.

Requirements of marine power plant control systems. Sudostroenie 28 no.3:18-21 Mr '62. (MIRA 15:4)
(Marine engines) (Automatic control)

APPROVED FOR RELEASE: 03/15/2001 CIA-RDP86-00513R001963520009-6"

"APPROVED FOR RELEASE: 03/15/2001 CIA-RDP86-00513R001963520009-6

ACC NR: AP6035837 SOURCE CODE: UR/0413/66/000/020/0041/0041

INVENTOR: Berezinskiy, V. I.; Vol'fenzon, M. N.; Zakharov, G. A.; Il'in, A. G.; Pavlova, Ye. A.; Skachkov, A. M.; Shifrin, M. Sh.; Eydlin, I. I.; Yung, V. N.

ORG: none

TITLE: System for automatic regulation of the steam-main operation of a marine turbine unit. Class 14, No. 187041

SOURCE: Izobreteniya, promyshlennyye obraztsy, tovarnyye znaki, no. 20, 1966, 41

TOPIC TAGS: turbine, steam turbine, engine turbine system, marine engine, marine engineering, pressure regulator, automatic regulation

ABSTRACT: An Author Certificate has been issued for a system for the automatic control of steam-main operation in marine-turbine units with steam takeoffs connected to units requiring dissimilar pressure, maintained by the use of pressure regulators, and to the cooled-steam circuit. To provide for the regulators' independent operation and to improve their functioning, the pressure regulators are connected parallel to the cooled-steam circuit. Orig. art. has: 1 figure.

SUB CODE: 13/ SUBM DATE: 12Jul65/

Card 1/1 UDC: 621.125-225.1-531.8

APPROVED FOR RELEASE: 03/15/2001 CIA-RDP86-00513R001963520009-6"

"APPROVED FOR RELEASE: 03/15/2001 CIA-RDP86-00513R001963520009-6

ZAKHAROV, Geral'd Alekseyevich; ZYKOV, S.S., kand. ekon. nauk, otv. red.; NAZARYANTS, T.M., red.; LOKSHINA, O.A., tekhn. red.

[Special features and prospects for developing the metalworking industry in Magadan and Kamchatka Provinces]Osobennosti i perspektivy razvitiia metalloobrabatyvaiushchei promyshlennosti Magadanskoi i Kamchatskoi oblastei. Novosibirsk, Izd-vo Sibirskogo otd-niia AN SSSR, 1962. 101 p. (MIRA 16:3)
(Magadan Province--Metalwork)
(Kamchatka--Metalwork)

APPROVED FOR RELEASE: 03/15/2001 CIA-RDP86-00513R001963520009-6"

"APPROVED FOR RELEASE: 03/15/2001 CIA-RDP86-00513R001963520009-6

KRASOVSKIY, V.I.; KUSHNIR, Yu.M.; BORDOVSKIY, G.A.; ZAKHAROV, G.F.; SVETLITSKIY, Ye.M.

Detection of corpuscules by the third artificial earth satellite. Isk.sput.Zem. no.2:59-60 '58. (MIRA 12:5)
(Artificial satellites)
(Solar radiation--Observations)

APPROVED FOR RELEASE: 03/15/2001 CIA-RDP86-00513R001963520009-6"

"APPROVED FOR RELEASE: 03/15/2001 CIA-RDP86-00513R001963520009-6

DOVGYALLO, G.Kh., prof.; ZAKHAROV, G.G., kand. med. nauk

Diagnosis of Takayashi's disease (multiple obliterating panarteritis)
Zdrav. Belor. 5 no.2:22-25 F '59. (MIRA 12:7)

1. Iz kliniki gospital'noy terapii Minskogo meditsinskogo instituta.
(ARTERIES--DISEASES)

APPROVED FOR RELEASE: 03/15/2001 CIA-RDP86-00513R001963520009-6"

"APPROVED FOR RELEASE: 03/15/2001 CIA-RDP86-00513R001963520009-6

ZAKHAROV, G. G. Cand Med Sci -- (diss) "On the problem of the clinic and treatment of poisonings ~~due to~~ caused by certain corrosive substances." Minsk, 1957. 19 pp (Minsk State Med Inst), 100 copies (KL, 6-58, 102)

APPROVED FOR RELEASE: 03/15/2001 CIA-RDP86-00513R001963520009-6"

"APPROVED FOR RELEASE: 03/15/2001 CIA-RDP86-00513R001963520009-6

VAYNER, M.I., TSIMBLER, Yu.A.; CHERNIKIN, V.I.; Prinimali uchastiye: MAKOVSKIY, V.A., student-diplomnik; ZAKHAROV, G.I., student-diplomnik; MINSKER, I.D.; OTROSHCHENKO, G.P.

Experimental investigation of the evaporation of gasoline from a deepened reinforced concrete tank. Transp. i khran.nefti i nefteprod. no. 3:23-28 '64. (MIRA 17:5)

1. Vsesoyuznyy nauchno-issledovatel'skiy institut po stroitel'stvu magistral'nykh truboprovodov, Spetsial'noye konstruktorskoye byuro "Transneft'avtomatika" i Moskovskiy ordena Trudovogo Krasnogo Znameni institut neftekhimicheskoy i gazovoy promyshlennosti imeni akademika I.M.Gubkina. 2. Moskovskiy ordena Trudovogo Krasnogo Znameni institut neftekhimicheskoy i gazovoy promyshlennosti imeni akademika I.M.Gubkina (for Makovskiy, Zakharov). 3. Vsesoyuznyy nauchno-issledovatel'skiy institut po stroitel'stvu magistral'nykh truboprovodov (for Minsker, Otroshchenko).

APPROVED FOR RELEASE: 03/15/2001 CIA-RDP86-00513R001963520009-6"

"APPROVED FOR RELEASE: 03/15/2001 CIA-RDP86-00513R001963520009-6

ZAKHAROV, G.I.

Analyzing the operation of the Stavropol-~~Moscow~~ and Krasnodar Territory-Serpukhov system of gas pipelines. Gaz. delo no.61: 15-20 '64. (MIRA 17:8)

1. Ob"yedinennoye dispetcherskoye upravleniye sistemy magistral'nykh gazoprovodov.

APPROVED FOR RELEASE: 03/15/2001 CIA-RDP86-00513R001963520009-6"

"APPROVED FOR RELEASE: 03/15/2001 CIA-RDP86-00513R001963520009-6

ZAKHAROV, S. M., Engineer

Chief Designer, Krasnyy Proletariy Plant (-1945-)

"New Machine Tools Produced by the Krasnyy Proletariy Plant," Stanki I Instrument, 16, Nos. 1-2, 1945

BR-52059019

APPROVED FOR RELEASE: 03/15/2001 CIA-RDP86-00513R001963520009-6"

"APPROVED FOR RELEASE: 03/15/2001 CIA-RDP86-00513R001963520009-6

ZAKHAROV, G. M. Engineer

Chief Designer, Krasnyy Proletariy Plant (-1945-)

"New Machine Tools Produced by the Krasnyy proletariy Plant,"
Stanki I Instrument, 16, No. 3, 1945.

BR-52059019

APPROVED FOR RELEASE: 03/15/2001 CIA-RDP86-00513R001963520009-6"

"APPROVED FOR RELEASE: 03/15/2001 CIA-RDP86-00513R001963520009-6

PA 30/49T7

ZAKHAROV, G. M.

USSR/Engineering Oct 48

Conveyors

Engines - Internal-Combustion

"Automatic Assembly Lines," G. M. Zakharov, Engr, G. I. Zuzanov, Engr, Laureate of Stalin Prize, 7½ pp

"Vest Mashinostroy" No 10

Describes machine tools and conveyers for mass production, with special reference to machining cylinder blocks and heads for internal-combustion engines. Includes 11 photographs.

30/49T7

APPROVED FOR RELEASE: 03/15/2001 CIA-RDP86-00513R001963520009-6"

"APPROVED FOR RELEASE: 03/15/2001 CIA-RDP86-00513R001963520009-6

ZAKHAROV, O.M., inzhener.

Trends in standards and the development of machinery. Standartizatsiia no.4:3-10 Jl-Ag '54. (MLRA 8:2)

1. Upravleniye po standartizatsii.
(Standardization) (Machinery--Standards)

APPROVED FOR RELEASE: 03/15/2001 CIA-RDP86-00513R001963520009-6"

"APPROVED FOR RELEASE: 03/15/2001 CIA-RDP86-00513R001963520009-6

ZAKHAROV, G.M., inzhener.

Eliminating the lag in the production of electric bridge cranes. Standartizatsiia no.2:55-57 Mr-Ap '55. (MLRA 8:6)

1. Komitet standartov, mer i izmeritel'nykh priborov pri Sovete Ministrov SSSR.

(Cranes, derricks, etc.--Standards)

APPROVED FOR RELEASE: 03/15/2001 CIA-RDP86-00513R001963520009-6"

"APPROVED FOR RELEASE: 03/15/2001 CIA-RDP86-00513R001963520009-6

ZAKHAROV, G.M.

ZAKHAROV, G.M., inzhener

Raise the level of standardization in boiler and turbine design. Standartizatsiia no.4:16-21 Jl-Ag '55. (MIRA 8:10)

1. Komitet standartov, mer i izmeritel'nykh priborov pri Sovete Ministrov SSSR
(Boilers--Standards) (Turbines--Standards)

APPROVED FOR RELEASE: 03/15/2001 CIA-RDP86-00513R001963520009-6"

"APPROVED FOR RELEASE: 03/15/2001 CIA-RDP86-00513R001963520009-6

ZAKHAROV, G.M., inzhener.

New techniques used in machinery drawing. Standartizatsiia. no.5:23-30 S-O '56. (MIRA 10:1)

1. Komitet standartov, mer i izmeritel'nykh priborov pri Sovete Ministrov SSSR. (Mechanical drawing)

APPROVED FOR RELEASE: 03/15/2001 CIA-RDP86-00513R001963520009-6"

"APPROVED FOR RELEASE: 03/15/2001 CIA-RDP86-00513R001963520009-6

ZAKHAROV, G.M.

AUTHOR: Zakharov, G.M. 28-1-34/42

TITLE: Marine Shipbuilding Parts (Detali morskogo sudostroyeniya)

PERIODICAL: Standartizatsiya, # 1, Jan-Feb 1957, p 83-84 (USSR)

ABSTRACT: The article presents information on the session of Technical Committee # 8 of the International Standards Organization, which took place on 21 to 24 November 1956 in Genoa (Italy). A Soviet delegation participated. The author states that life boats and ship screws were standardized in USSR in 1956 for which he did the related experimental and research work.

ASSOCIATION: TsPKB MMF

AVAILABLE: Library of Congress

Card 1/1

APPROVED FOR RELEASE: 03/15/2001 CIA-RDP86-00513R001963520009-6"

"APPROVED FOR RELEASE: 03/15/2001 CIA-RDP86-00513R001963520009-6

ZAKHAROV, G.M.

Diffusion of macromolecules of synthetic polyisoprene to natural rubber during the uniaxial stretch of the polymer. Vysokom. soed. 7 no.3:453-456 Mr '65. (MIRA 18:7)

1. Leningradskiy politekhnicheskiy institut imeni M.I. Kalinina.

APPROVED FOR RELEASE: 03/15/2001 CIA-RDP86-00513R001963520009-6"

"APPROVED FOR RELEASE: 03/15/2001 CIA-RDP86-00513R001963520009-6

GRISHECHKIN, V.S.; ZAKHAROV, G.M.; NIKITINSKAYA, T.I.

Excelectronic emission from X-ray titanium dioxide. Izv. vys. ucheb. zav.; fiz. no.6:86-89 '63. (MIRA 17:2)

1. Leningradskiy politekhnicheskiy institut imeni Kalinina.

APPROVED FOR RELEASE: 03/15/2001 CIA-RDP86-00513R001963520009-6"

"APPROVED FOR RELEASE: 03/15/2001 CIA-RDP86-00513R001963520009-6

ACCESSION NR: AP4025089 S/0139/63/000/006/0086/0089

AUTHORS: Grishechkin, V. S.; Zakharov, G. M.; Nikitinskaya, T. I.

TITLE: Exoelectron emission of x-rayed titanium dioxide

SOURCE: IVUZ. Fizika, no. 6, 1963, 86-89

TOPIC TAGS: electrical conductivity, exoelectron emission, partially oxidized titanium dioxide, x-irradiation, Fermi levels

ABSTRACT: The electrical conductivity and exoelectron emission of partially oxidized titanium dioxide have been compared after subjecting the specimen to x-rays. The specimen was obtained in 20 μ-thick films, and radiation was supplied from a BPM-200 source with U = 200 kv, i = 10 ma, t = 30 minutes. The results of 40 different runs are presented graphically. The exoelectron emission shows a maximum at T = 240C and is noticeably reduced after x-irradiation. The graph of electrical conductivity versus temperature, on the other hand, shows identical values both before and after x-irradiation. The author explains the difference in the behavior of the two curves from kinetic considerations of electron Fermi levels. Orig. art. has: 3 figures.

Card 1/2

APPROVED FOR RELEASE: 03/15/2001 CIA-RDP86-00513R001963520009-6"

"APPROVED FOR RELEASE: 03/15/2001 CIA-RDP86-00513R001963520009-6

ACCESSION NR: AP4025089

ASSOCIATION: Leningradskiy politekhnicheskiy institut imeni M. I. Kalinina (Leningrad Polytechnical Institute)

SUBMITTED: 25Jul62 DATE ACQ: 14Feb64 ENCL: 00

SUB CODE: PH NO REF SOV: 002 OTHER: 009

Card 2/2

APPROVED FOR RELEASE: 03/15/2001 CIA-RDP86-00513R001963520009-6"

"APPROVED FOR RELEASE: 03/15/2001 CIA-RDP86-00513R001963520009-6

30408

15.9450 220 1372 only

S/058/61/000/009/025/050
A001/A101

AUTHORS: Zakharov, G.M., Rybchin, V.N.

TITLE: Method of measuring diffusion of macromolecules into polymers by means of tritium tracer

PERIODICAL: Referativnyy zhurnal. Fizika, no. 9, 1961, 176, abstract 9D83 ("Nauchno-tekhn. inform. byul. Leningr. politekhn. in-t", 1960, no. 7, 3 - 7)

TEXT: The authors develop a method of measuring diffusion coefficient (D) of macromolecules into polymers, based on introduction of tagged atoms into molecules of the diffusing substance. Radioactive H was employed as a tracer. The method permits determinations of D of the order of 10^{-11} cm^2/sec per 1 hour and $\sim 10^{-12}$ cm^2/sec per $\sim$10 hours. The D-values were determined for diffusion of natural caoutchouc HK (NK) into some sorts of caoutchouc [NK, CKB (SKB), vulcanized rubber of NK] at 60°C. Measurement error amounted to 15-20%.

L. Layus

[Abstracter's note: Complete translation]

Card 1/1

APPROVED FOR RELEASE: 03/15/2001 CIA-RDP86-00513R001963520009-6"

"APPROVED FOR RELEASE: 03/15/2001 CIA-RDP86-00513R001963520009-6

BRESLER, S.Ye.; ZAKHAROV, G.M.; KIRILLOV, S.V.

Diffusion of synthetic polyisoprene macromolecules in natural rubber. Vysokom.soed. 3 no.7:1072-1076 Jl '61. (MIRA 14:6)

1. Institut vysokomolekulyarnykh soyedineniy AN SSSR i Leningradskiy politekhnicheskiy institut imeni N.I. Kalinina.
(Isoprene) (Rubber) (Diffusion)

APPROVED FOR RELEASE: 03/15/2001 CIA-RDP86-00513R001963520009-6"

"APPROVED FOR RELEASE: 03/15/2001 CIA-RDP86-00513R001963520009-6

S/081/61/000/013/027/028
B117/B203

AUTHORS: Zakharov, G. M., Rybchin, V. N.

TITLE: Method of measuring the diffusion of macromolecules into polymers with the aid of tritium tagging

PERIODICAL: Referativnyy zhurnal. Khimiya, no. 13, 1961, 700, abstract 13P71 (Nauchno-tekhn. inform. byul. Leningr. politekhn. in-t, no. 7, 1960, 3 - 7)

TEXT: The authors developed a method of determining the diffusion coefficient (D) of НК (NK) macromolecules into NK, into the vulcanizate of NK, and into СКБ (SKB) with the aid of tritium tagging. The method permits a determination of $D \approx 10^{11}$ cm^2/sec in about 1 hr, and of $D = 10^{12}$ cm^2/sec in about 10 hr. The absorption coefficient of β-particles in rubber was measured by the decrease in counting intensity of β-particles with increasing absorption thickness. In diffusion of NK into NK, SKB, and the vulcanizate of NK, the values of D at a temperature of 60° ± 0.25° are $(3.0 \pm 0.4) \cdot 10^{-12}$, $(1.1 \pm 0.2) \cdot 10^{-12}$; $(6 \pm 1) \cdot 10^{-13}$, respective-

Card 1/2

APPROVED FOR RELEASE: 03/15/2001 CIA-RDP86-00513R001963520009-6"

"APPROVED FOR RELEASE: 03/15/2001 CIA-RDP86-00513R001963520009-6

S/081/61/000/013/027/028
B117/B203

Method of measuring...

ly. [Abstracter's note: Complete translation.]

Card 2/2

APPROVED FOR RELEASE: 03/15/2001 CIA-RDP86-00513R001963520009-6"

"APPROVED FOR RELEASE: 03/15/2001 CIA-RDP86-00513R001963520009-6

25276 S/190/61/003/007/014/021
B101/B220

15.9000

AUTHORS: Bresler, S. Ye., Zakharov, G. M., Kirillov, S. V.

TITLE: Diffusion of the macromolecules of synthetic polyisoprene into natural rubber

PERIODICAL: Vysokomolekulyarnyye soyedineniya, v. 3, no. 7, 1961, 1072-1076

TEXT: The diffusion of tritium tagged polyisoprene into natural rubber was studied. The use of tritium permitted a reduction of the test time to 10-20 hr with a coefficient of diffusion of the order of magnitude 10^{-13} - 10^{-14} as compared to C^{14}. Tritium tagged acetylene was produced by the reaction in vacuum of calcium carbide with tritium water and frozen out in liquid nitrogen. The acetylene was made to react with acetone in the presence of anhydrous ether and pulverized KOH, the resulting alcoholate of dimethyl acetylenyl carbinol decomposed with the water, separated from the water, and the carbinol distilled off at 101-105°C. Then the carbinol was hydrogenated electrolytically (copper cathode, nickel anode, anodic solution: concentrated NaOH, cathodic

Card 1/7

APPROVED FOR RELEASE: 03/15/2001 CIA-RDP86-00513R001963520009-6"

"APPROVED FOR RELEASE: 03/15/2001 CIA-RDP86-00513R001963520009-6

Diffusion of the macromolecules of ... 25270 S/190/61/003/007/014/021 B101/B220

solution; 2% soda solution) until the ammoniacal solution of $AgNO_3$ gave no further reaction specific for triple bonds. The dimethyl-vinyl carbinol was salted out by means of potash, dried and distilled. The dehydration of the dimethyl-vinyl carbinol was effected by anhydrous $MgSO_4$ at 238°C.

The resulting isoprene was purified by distillation and polymerized by means of sodium at 70°C. The polymer had a specific activity of 0.1 microcurie/g. It was subjected to partial destruction by heating with benzoin + Fe-naphthenate and then fractionated by extraction. It was not possible to use a standard beta counter due to the low energy of the beta particles. The measurements were made with the apparatus shown diagramatically in Fig. 3. The moving screen 3 permitted the measuring of the background without removal of the sample from the apparatus. The temperature was controlled by a bridge connection to which the resistance thermometer 2 was connected. A film of polyisoprene in benzene solution (0.5 to 0.25 μ thick) was applied to a plate of natural rubber, the sample put into the apparatus, the apparatus evacuated and filled with a mixture of argon and alcohol vapor. After heating to the test temperature the chronological development of the radiation intensity was measured. The

Card 2/7

APPROVED FOR RELEASE: 03/15/2001 CIA-RDP86-00513R001963520009-6"

"APPROVED FOR RELEASE: 03/15/2001 CIA-RDP86-00513R001963520009-6

25270

S/190/61/003/007/014/021
B101/B220

Diffusion of the macromolecules of ...

coefficient of diffusion D was calculated from $I/I_0 = f(\log \mu^2 Dt)$. I_0 is the initial activity of the sample, I the activity at the time t, μ the absorption coefficient of natural rubber for beta particles, $\mu = (7500 \pm 200)\ cm^{-1}$, f the combination of Kramp's integral functions. The experimental curves of diffusion for polyisoprene with a molecular weight (M) = $1.1 \cdot 10^4$ are shown in Fig. 4. Fig. 5 represents log D as function of 1/T in the range 22-140°C for polyisoprene with M = $1.1 \cdot 10^4$. The activation energy was found to be 8.7 kcal/mole. Fig. 6 represents D for polyisoprene with M = $8 \cdot 10^3 - 2.8 \cdot 10^4$ at 100°C. The values of D are in the range of $6 \cdot 10^{-13}$ to $0.9 \cdot 10^{-13}\ cm^2/sec$. $D = (1.4 \pm 0.2) \cdot 10^{-13}\ cm^2/sec$ for polyisoprene with M = $1.1 \cdot 10^4$ at 100°C. The empirical equation $D = 6.6 \cdot 10^{-8} M^{-1.31}$ holds. The values obtained for D are much lower than those found by P. Debye (see below). A. Ye. Favorskiy is mentioned. There are 6 figures and 8 references: 3 Soviet-bloc and 5 non-Soviet-bloc. The 3 references to English-language publications read as follows:
P. Bueche, W.M. Cashin, P. Debye, J.Chem. Phys., 20, 1956, 1952;
C.L. Raynor, L. Thomassen, L.J.Rouse, Trans.Am.Soc.Metals, 30, 313, 1942;
V.Eyring, T.Ree, N.Hirai, Proc.Nat.Acad. Sci., 44, 1213, 1958.

Card 3/7

APPROVED FOR RELEASE: 03/15/2001 CIA-RDP86-00513R001963520009-6"

"APPROVED FOR RELEASE: 03/15/2001 CIA-RDP86-00513R001963520009-6

25270

S/190/61/003/007/014/021
B101/B220

Diffusion of the macromolecules of ...

ASSOCIATION: Institut vysokomolekulyarnykh soyedineniy AN SSSR (Institute of High-molecular Compounds, AS USSR); Leningradskiy politekhnicheskiy institut im. M.I. Kalinina (Leningrad Polytechnic Institute imeni M. I. Kalinin)

SUBMITTED: November 5, 1960

Card 4/7

APPROVED FOR RELEASE: 03/15/2001 CIA-RDP86-00513R001963520009-6"

"APPROVED FOR RELEASE: 03/15/2001 CIA-RDP86-00513R001963520009-6

87368

9.6000 (1099 ONLY)
6.4720

S/120/60/000/004/007/028
E032/E414

AUTHORS: Zakharov, G.M., Nikitinskaya, T.I. and Khapachev, A.G.

TITLE: A Pulse Method of Measuring Large Resistances

PERIODICAL: Pribory i tekhnika eksperimenta, 1960, No.4, pp.82-84

TEXT: High voltage pulses of approximately rectangular form were produced by the circuit shown in Fig.1. The circuit is based on the high-voltage hydrogen thyratrons ТГИ 1-90/8 (TGI 1-90/8) and an artificial LC shaping line as shown. With suitably chosen parameters of the shaping line, the length of the pulse could be made of the order of 1 μ sec while the length of the leading edge not more than 0.1 μ sec. The processes which take place in the measuring circuit can be represented approximately by the equivalent circuit shown in Fig.3. In this figure, R and C are the resistance and capacitance of the specimen under investigation, R_1 is the resistance of the generator and R_2 is the resistance of the galvanometer. Since $R \gg R_1 + R_2$, the time constant τ is given by $\tau = C(R_1 + R_2)$. If the length of the rectangular pulse is much greater than the time constant, the form of the rectangular pulse across the specimen will not be distorted. The dependence of the current on time is shown schematically in Fig.4

Card 1/4

APPROVED FOR RELEASE: 03/15/2001 CIA-RDP86-00513R001963520009-6"

"APPROVED FOR RELEASE: 03/15/2001 CIA-RDP86-00513R001963520009-6

87263
S/120/60/000/004/007/028
E032/E414

A Pulse Method of Measuring Large Resistances

where i_g and i_p correspond to the charge and discharge currents of the capacitor and i_n represents the conduction current pulses through R. The mean current in the circuit is given by $i_c = i_n t/T$. The form of the peaks i_g and i_p is not necessarily the same since it is determined by the structure of the leading and trailing edges of the voltage pulse. However, this will have little effect on the magnitude of the mean current since the amount of electricity in the discharge and charge of the capacitor is the same. From the measured magnitude of i_c one can determine i_n if t and T are known, and hence R can be calculated. The resistance of the instrument which records the current should not be too high because large values of this resistance lead to larger time constants. A mirror galvanometer can be conveniently used for this purpose. In the instrument employed by the present authors, the sensitivity of the galvanometer was 10^{-10} amp/division. the amplitude of the pulses was 1 kV, and $T/t = 10^3$. The upper limit of the resistances which could be measured was thus 10^{10} ohm although an extension to

Card 2/4

APPROVED FOR RELEASE: 03/15/2001 CIA-RDP86-00513R001963520009-6"

"APPROVED FOR RELEASE: 03/15/2001 CIA-RDP86-00513R001963520009-6

87360

S/120/60/000/004/007/023
E032/E414

A Pulse Method of Measuring Large Resistances

10^{12} ohm is said to be possible. There are 4 figures and 5 references: 4 Soviet and 1 non-Soviet.

ASSOCIATION: Leningradskiy politekhnicheskiy institut (Leningrad Polytechnical Institute)

SUBMITTED: July 1, 1959

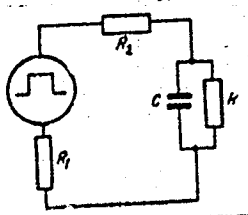

Рис. 3. Эквивалентная схема измерительной цепи. R, C — сопротивление и емкость измеряемого образца, R_1 — сопротивление генератора, R_2 — сопротивление гальванометра

Fig.3.

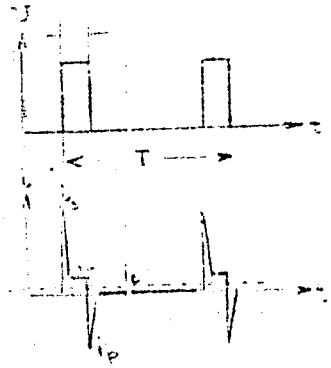

Fig.4.

Card 3/4

APPROVED FOR RELEASE: 03/15/2001 CIA-RDP86-00513R001963520009-6"

"APPROVED FOR RELEASE: 03/15/2001 CIA-RDP86-00513R001963520009-6

07368
S/120/60/000/004/007/028
E032/E414

A Pulse Method of Measuring Large Resistances

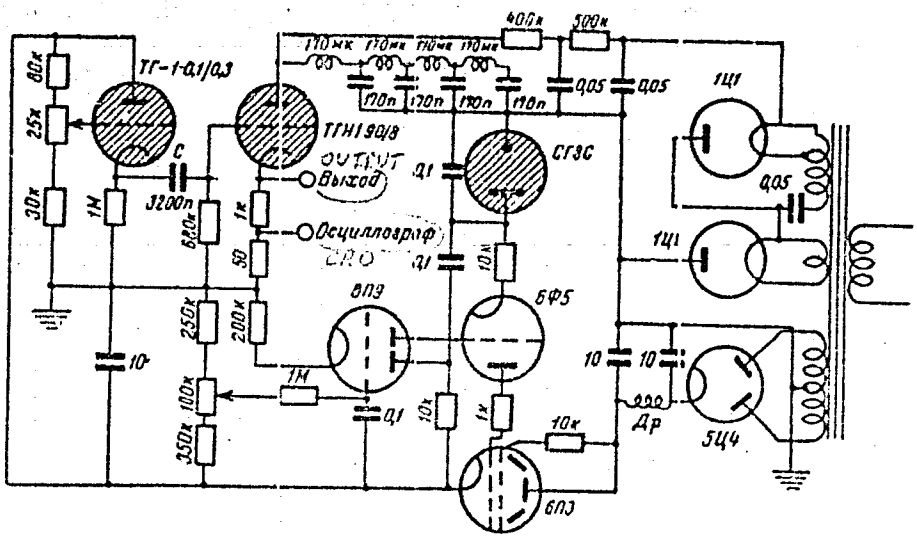

Рис. 1. Принципиальная схема

Card 4/4

APPROVED FOR RELEASE: 03/15/2001 CIA-RDP86-00513R001963520009-6"

"APPROVED FOR RELEASE: 03/15/2001 CIA-RDP86-00513R001963520009-6

ZAKHAROV, G.M.; NIKITINSKAYA, T.I.; SHAPACHEV, A.G.

Electric conductivity of fluorite. Fiz.tver.tela 1 no.5:835-837 My '59. (MIRA 12:4)

1. Leningradskiy politekhnicheskiy institut im. M.I. Kalinina.
(Fluorite--Electric properties)

APPROVED FOR RELEASE: 03/15/2001 CIA-RDP86-00513R001963520009-6"

"APPROVED FOR RELEASE: 03/15/2001 CIA-RDP86-00513R001963520009-6

ZAKHAROV, G N

25(2) PHASE I BOOK EXPLOITATION SOV/3089

Koritysskiy, Yakov Il'ich, Grigoriy Nikolayevich Zakharov, Lev Yudel'yevich Polyakovskiy, Vitaliy Konstantinovich Makarov, and Boris Tikhonovich Zonov

Pribory i ustanovki dlya issledovaniya tekstil'nykh mashin (Instruments and Installations for Investigating Textile Machinery) Moscow, Mashgiz, 1958. 278 p. 2,400 copies printed. (Series: Vsesoyuznyy nauchno-issledovatel'skiy institut tekstil'nogo i legkogo mashinostroyeniya. Sbornik trudov, No. 4)

Sponsoring Agencies: USSR. Gosudarstvennaya planovaya komissiya. Glavnoye upravleniye nauchno-issledovatel'skikh i proyektnykh organizatsiy, and Vsesoyuznyy nauchno-issledovatel'skiy institut tekstil'nogo i legkogo mashinostroyeniya.

Ed.: S.O. Dobrogurskiy, Honored Worker in Science and Technology, Doctor of Technical Sciences, Professor; Tech. Ed.: A. F. Uvarova; Managing Ed. for Literature on Machine and Instrument Construction: N.V. Pokrovskiy, Engineer.

PURPOSE: This book is intended for scientific workers, aspirants, research engineers and technicians, designers of textile machinery, and technologists in the textile industry.

Card 1/ 12

APPROVED FOR RELEASE: 03/15/2001 CIA-RDP86-00513R001963520009-6"

"APPROVED FOR RELEASE: 03/15/2001 CIA-RDP86-00513R001963520009-6

COVERAGE: The book, consisting of eight chapters, presents an account of the development and application of modern experimental methods of investigating textile machinery. The first chapter deals with general considerations of method, while the second presents information on electrical methods of measuring nonelectrical quantities, on transducers and their connecting circuits, on recording devices, and on electrical and radio equipment. Methods of determining parameters of parts being subjected to experimental study are described in Chapter III. The fourth chapter deals with the determination of displacements, speeds, and accelerations of given points in machine parts. Chapter V describes methods of measuring tension in a single thread as well as in a group of threads under varying operating conditions. Measurements of power, forces, moments, stresses, and deformations are also discussed. Ch. VI presents methods of measuring vibrations in machine parts, while Chapter VII deals with methods and equipment for dynamic balancing of rotating parts. Chapter VIII describes special stands and equipment for testing the performance of textile-machinery units. Most of the testing equipment described in the book was developed by VNIILTYeKMASh. The following organizations are presently engaged in the development of instruments and installations for investigating and testing textile machinery, parts, and subassemblies: The Moskovskiy, Leningradskiy, Ivanovskiy i Kostromskoy uchebnyye tekstil'nyye instituty (Moscow, Leningrad, Ivanovo, and Kostroma Textile Institutes of Higher Education); the TsNIKhBI,

APPROVED FOR RELEASE: 03/15/2001 CIA-RDP86-00513R001963520009-6"

"APPROVED FOR RELEASE: 03/15/2001 CIA-RDP86-00513R001963520009-6

TsNIILV, TsNII MAShdetal', and the TsNIIshelka scientific research institutes; the Zavod imeni Karla Marksa (Plant imeni Karl Marx), Kolomenskiy zavod (Kolomenskoye Plant), Orlovskiy zavod (Orel Plant), Zavod imeni 1-go Maya (Plant imeni the First of May), and Petushinskaya fabrika (Petushinskaya Plant) and the Kurovskiy Kombinat (Kurovskoye Combine). The author thanks N.P. Rayevskiy, G.N. Petrov, V.L. Biderman, and I.A. Popov Candidates of Technical Sciences, for their comments on the manuscript. References follow several of the chapters.

TABLE OF CONTENTS:

Introduction	3
Ch. I. General Considerations of Method	7
Ch.II. Basic Information on Electrical Methods of Measuring Nonelectrical Quantities	9
Transducers	9
Recording devices	17
Electrical differentiation and integration	18
Carrier-frequency amplifiers	20
VNIILTYeMASh tensiometric amplifiers	30

APPROVED FOR RELEASE: 03/15/2001 CIA-RDP86-00513R001963520009-6"

"APPROVED FOR RELEASE: 03/15/2001 CIA-RDP86-00513R001963520009-6

Bibliography 35

Ch. III. Determination of the Location of the Center of Gravity and Moment of Inertia of Textile-machine Parts 36

Experimental methods of determining the coordinates of a center of gravity 36

Devices for determining the coordinates of a center of gravity and moments of inertia by the physical-pendulum method 38

Instruments and devices for determining the coordinates of a center of gravity and moments of inertia of parts by a method of bifilar suspension 40

Bibliography 42

Ch. IV. Determination of Displacements, Velocities, and Accelerations 43

Mechanical devices for continuous recording of displacements in mechanisms of spinning machines and looms 43

An instrument for recording displacements of a rolling beam in the fabric-rolling mechanism of a single-process scutcher 43

APPROVED FOR RELEASE: 03/15/2001 CIA-RDP86-00513R001963520009-6"

"APPROVED FOR RELEASE: 03/15/2001 CIA-RDP86-00513R001963520009-6

Instruments and Installations for Investigating (Cont.) SOV/3089

Device for recording angular displacement of a warp beam 44
Device for recording displacement of the carriage of the BV-2 high-speed roving machine with the aid of a kymograph 46

Electrical devices for continuous recording of displacements and speeds in looms 46
Use of a measuring slide wire in recording displacements of shuttle boxes, shuttle acceleration patterns, displacements and speed of a picking arm, and angular displacements of a warp beam 46
Device for continuous recording of displacement and speed of a warp beam with the aid of wire strain gages 48
Device for recording displacements of a reed at the end of its stroke with the aid of wire strain gages 50
Devices for determining displacements by recording successive positions 52
Mechanical device for recording the position of a shuttle upon entrance to the shuttle box of a loom 52

Card 5/12

APPROVED FOR RELEASE: 03/15/2001 CIA-RDP86-00513R001963520009-6"

"APPROVED FOR RELEASE: 03/15/2001 CIA-RDP86-00513R001963520009-6

Use of electrical-contact devices for recording the position of a shuttle during flight 54
Use of induction transducers for recording positions of a shuttle during flight and upon entrance to and exit from a shed 58
Recording of positions of servo elements and of a bobbin in an automatic bobbin changer of a nine-shuttle two-sided loom (Schwabe type) 59
Device for recording angular displacement of nonuniformly rotating shafts 61
Device for recording the moment of contact of the tape seam with the spindle pulley 62
Methods of determining tape slip and the actual transmission ratios for spindles with tape drives 63

Slow-motion filming 65
Filming the motion of a bobbin during its discharge from a trough at the entrance to an automatic bobbin changer 67

APPROVED FOR RELEASE: 03/15/2001 CIA-RDP86-00513R001963520009-6"

"APPROVED FOR RELEASE: 03/15/2001 CIA-RDP86-00513R001963520009-6

Instruments and Installations for Investigating (Cont.) SOV/3087

Filming the displacement of a shuttle in the shed of a loom 70

Tachometers 71
Electric-generator tachometers 73
Pulse tachometer with mechanical contact device 74
Induction pulse tachometer 75
Photoelectric pulse tachometer 75
Electronic stroboscopic tachometers 77
Some methods for calibrating stroboscopic tachometers 80
Linear synchroscope 86

Bibliography 89

Ch. V. Determination of Forces, Moments, Stresses, and Deformations 91
Use of strain gages for determining strains, stresses, and forces in machine parts 91

Methods and devices for determining forces 93

Card 7/12

APPROVED FOR RELEASE: 03/15/2001 CIA-RDP86-00513R001963520009-6"

"APPROVED FOR RELEASE: 03/15/2001 CIA-RDP86-00513R001963520009-6

Measurement of forces acting on drafting rollers in spinning and roving machines 93

Measurement of forces acting on the rolling beam of the fabric-rolling mechanism of a single-process scutcher 98

Attachments and devices for measuring basic force and process parameters of looms 100

Measuring tension in a single thread 108

Installations for determining tension in a thread in the upper portion of a balloon 115

Installations for measuring friction forces between traveller and ring 117

Installation for simultaneous determination of tension in a thread and the friction force between the traveller and ring 119

Installation for determining the friction force between a thread and the traveller 123

Determining braking forces of a shuttle during its entrance to and exit from shuttle boxes of a loom 125

APPROVED FOR RELEASE: 03/15/2001 CIA-RDP86-00513R001963520009-6"

"APPROVED FOR RELEASE: 03/15/2001 CIA-RDP86-00513R001963520009-6

Instruments and Installations for Investigating (Cont.) SOV/3089

Devices and instruments for measuring small torques and power 128
Stationary dynamometers of the Plant imeni K. Marx for measuring power consumed by a single spindle 130
VNIILTYeKMASh dynamometer for measuring low power 132
MTI pendulum dynamometer 136
SKF-norma dynamometers [torque meters] 137
Power measurement by the self-braking method 137
Measurement of Stresses 139
Measurement of stresses in spindle blades and reactions in their bearings 139
Measurement of stresses in a hackling-machine fly comb 146
Measurement of stresses in loom parts 146
Measurement of deformations 147
Determination of deformations of flyers 147
Bibliography 148

Card 9/12

APPROVED FOR RELEASE: 03/15/2001 CIA-RDP86-00513R001963520009-6"

"APPROVED FOR RELEASE: 03/15/2001 CIA-RDP86-00513R001963520009-6

Instruments and Installations for Investigating (Cont.) SOV/3089

Devices and instruments for measuring small torques and power 128
Stationary dynamometers of the Plant imeni K. Marx for measuring power consumed by a single spindle 130
VNIILTYeKMASh dynamometer for measuring low power 132
MTI pendulum dynamometer 136
SKF-norma dynamometers [torque meters] 137
Power measurement by the self-braking method 137

Measurement of Stresses 139
Measurement of stresses in spindle blades and reactions in their bearings 139
Measurement of stresses in a hackling-machine fly comb 146
Measurement of stresses in loom parts 146

Measurement of deformations 147
Determination of deformations of flyers 147

Bibliography 148

Card 9/12

APPROVED FOR RELEASE: 03/15/2001 CIA-RDP86-00513R001963520009-6"

"APPROVED FOR RELEASE: 03/15/2001 CIA-RDP86-00513R001963520009-6

Instruments and Installations for Investigating (Cont.) SOV/3089

Ch. VI. Measurement of Vibrations 150
Purpose and classification of vibration-measuring instruments 150
Elements of the theory of the seismic-and contact-type instruments 152
Laboratory instruments and installations 159
Universal hand vibrometer with wire pickup 168
RVP portable hand vibrometer 178
Theoretical principles of the use of hand vibrometers 180

Bibliography 191

Ch. VII. Machines and Instruments for Dynamic Balancing 192
Theoretical conditions for balancing 192
Static balancing 196

Machines for dynamic balancing of general-purpose parts 197
Machines with pendulum - type frames 198
Machines with movable supports of the simplest type 206
Modern machines with movable supports 208
Balancing of parts on their bearings 213

Card 10/12

APPROVED FOR RELEASE: 03/15/2001 CIA-RDP86-00513R001963520009-6"

"APPROVED FOR RELEASE: 03/15/2001 CIA-RDP86-00513R001963520009-6

Special machines and instruments 216
DPR-1 machine for checking the dynamic unbalance of flyers in cotton and bast-fiber roving machines 216
PBR-1 instrument for checking the dynamic unbalance of flyers in cotton-roving machines 222
Instrument for balancing flyers, manufactured by the Hoffman Brothers Firm 224
DBV-2 for dynamic balancing of spinning spindles 224
SBVK-1 machine for investigating dynamic unbalance of spindles and bobbins 229
PBSh-3 and PBK-3 instruments for checking dynamic unbalance of wooden spools and bobbins 231
Bobbin-balancing instrument, manufactured by the Universal Winding Company 232
PDKV-1 instrument for checking dynamic unbalance of bobbins on a spindle 233

Bibliography 234

APPROVED FOR RELEASE: 03/15/2001 CIA-RDP86-00513R001963520009-6"

"APPROVED FOR RELEASE: 03/15/2001 CIA-RDP86-00513R001963520009-6

Ch. VIII. Special Stands and Installations 235
ISTs-3 testing stand for centrifuges 235
SKMIV-2 stand for complete mechanical testing of spinning and twisting spindles 240
Vacuum installation for investigating the effect of air resistance on the power consumed by a spindle 253
Installations measuring pressure force between flyer arm and roving bobbin 257
Instrument for checking flyer arms of cotton-roving machines 262
Installations and devices for experimental determination of bearing yielding characteristics and the rigidity of spindle blades 264
POShV-1 unit for determining deviation of a spindle-blade axis 274

Bibliography 276

AVAILABLE: Library of Congress (TS1525.M63)

VK/fal
4/14/60

Card 12/12

APPROVED FOR RELEASE: 03/15/2001 CIA-RDP86-00513R001963520009-6"

"APPROVED FOR RELEASE: 03/15/2001 CIA-RDP86-00513R001963520009-6

ZAKHAROV, G.N.; ZAKHAROV, V.A.

New instrument for measuring the force of friction between the traveler and the ring. Tekst.prom. 21 no.2:59-60 Fe '61. (MIRA 14:3)

(Spinning machinery)

APPROVED FOR RELEASE: 03/15/2001 CIA-RDP86-00513R001963520009-6"

"APPROVED FOR RELEASE: 03/15/2001 CIA-RDP86-00513R001963520009-6

15.6200

77550
SOV/65-60-2-10/15

AUTHORS: Papok, K. K., Zarubin, A. P., Zakharov, G. V.

TITLE: The Method For Evaluation of Crankcase Properties of Oils on Apparatus FZZ

PERIODICAL: Khimiya i tekhnologiya topliv i masel, 1960, Nr 2, pp 46-52 (USSR)

ABSTRACT: The apparatus used for laboratory evaluation of the crankcase properties of lubricating oils is shown in Fig. 1. This apparatus can be used for evaluation of the corrosive properties of oils, their tendency to form residues, and their evaporation with and without additives. The evaluation of the corrosive properties of oil is based on the variation in weight (total) of the lead plates before and after experiment. The corrosion is expressed in g/m^2. The tendency of oil to form residue is determined by a method of B. S. Zuseva. After the experiment, 10 ml of oil are diluted with 54 ml of isooctane, and 8 ml of this mixture is put into each of the four test tubes.

Card 1/4

APPROVED FOR RELEASE: 03/15/2001 CIA-RDP86-00513R001963520009-6"

"APPROVED FOR RELEASE: 03/15/2001 CIA-RDP86-00513R001963520009-6

77550, SOV/55-60-2-10/15

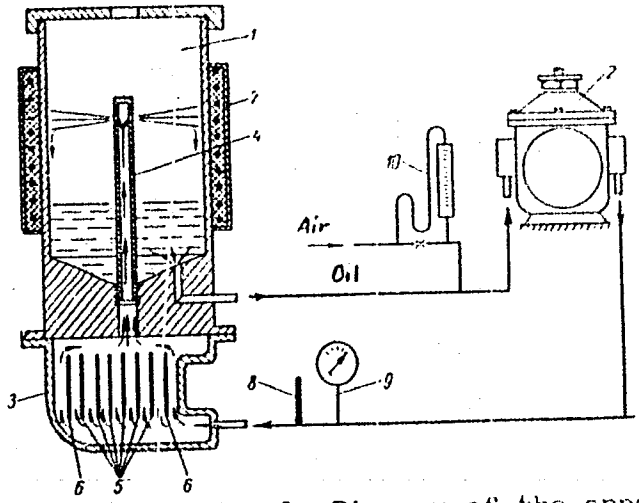

Fig. 1. Diagram of the apparatus PZZ: (1) Oil tank; (2) pump; (3) oil pan with lead and copper plates; (4) circulation pipes; (5) lead plates (six), 20 x 40 x 2 mm; (6) two copper plates, 20 x 40 x 2 mm; (7) electrical heater; (8) mercury thermometer; (9) manometer; (10) rheometer.

Card 2/4

APPROVED FOR RELEASE: 03/15/2001 CIA-RDP86-00513R001963520009-6"

"APPROVED FOR RELEASE: 03/15/2001 CIA-RDP86-00513R001963520009-6

The Method For Evaluation of Crankcase Properties of Oils on Apparatus PZZ

77550
SOV/65-60-2-10/15

After centrifuging at 2500 rpm for 15 minutes, the clear oil of each test tube is decanted and a new 5 ml of the mixture is added to each tube. The volume of the deposit is determined visually and its percentage in the oil is calculated from the total amount of deposit in four tubes in relation to the amount of oil taken. The percent of evaporation is determined from the weight of oil before and after the experiment. The best conditions for evaluation of the crankcase properties of oils on apparatus PZZ are: amount of oil taken for testing, 250 ml; temperature of oil (entering the oil pan), 150°; rate of oil circulation, 125 liters/hour; intake of the air, 50 liter/hour; duration of experiment, 2 hours. The reproducibility of the method for determination of the corrosive properties of oil up to 15 g/m² is ± 1 g/m²; from 15 up to 100 g/m², ± 7%; and 100 and over, ±10%. The corrosive properties of oils with additives decrease sharply as compared to pure oils (without additives). Addition of ionol to lubricating oils produced the best

Card 3/4

APPROVED FOR RELEASE: 03/15/2001 CIA-RDP86-00513R001963520009-6"

"APPROVED FOR RELEASE: 03/15/2001 CIA-RDP86-00513R001963520009-6

The Method For Evaluation of Crankcase Properties of Oils on Apparatus PZZ

77550
SOV/65-60-2-10/15

results with respect to their corrosive properties. The results obtained on apparatus PZZ are claimed to be more accurate than those obtained on Pinkevich's apparatus (GOST 5162-49). There are 4 figures; 1 table; and 1 Soviet reference.

Card 4/4

APPROVED FOR RELEASE: 03/15/2001 CIA-RDP86-00513R001963520009-6"

"APPROVED FOR RELEASE: 03/15/2001 CIA-RDP86-00513R001963520009-6

ZAKHAROV, G.N.; KORNEV, I.V.

Instruments for measuring basic parameters of fabric construction.
Tekst.prom. 18 no.10:30-34 O '58. (MIRA 11:11)
(Textile fabrics) (Weaving)

APPROVED FOR RELEASE: 03/15/2001 CIA-RDP86-00513R001963520009-6"

"APPROVED FOR RELEASE: 03/15/2001 CIA-RDP86-00513R001963520009-6

KORITYSSKIY, Yakov Il'ich; ZAKHAROV, Grigoriy Nikolayevich; POLYAKOVSKIY, Lev Yudel'yevich; [redacted], Vitaliy Konstantinovich; ZOMOV, Boris Tikhonovich; DOBROGURSKIY, S.O., doktor tekhn.nauk, prof., zaslushennyy deyatel' nauki i tekhniki, red.; UVAROVA, A.F., tekhn. red.

[Devices and equipment for research on textile machinery] Pribory i ustanovki dlia issledovaniia tekstil'nykh mashin. Moskva, Gos. nauchn.-tekhn. izd-vo mashinostroit. lit-ry, 1958. 278 p. (Pribory i ustanovki dlia issledovaniia tekstil'nykh mashin, vol.4) (MIRA 12:7)

(Textile machinery—Testing) (Testing machines)

APPROVED FOR RELEASE: 03/15/2001 CIA-RDP86-00513R001963520009-6"

"APPROVED FOR RELEASE: 03/15/2001 CIA-RDP86-00513R001963520009-6

1. ZAKHAROV, G. P.

2. USSR (600)

4. Stars, Variable

7. Visual observations of variable stars. Article I.
Per. zvezdy 8 No. 3, 1951

9. Monthly Lists of Russian Accessions, Library of Congress, March 1953, Unclassified.

APPROVED FOR RELEASE: 03/15/2001 CIA-RDP86-00513R001963520009-6"

"APPROVED FOR RELEASE: 03/15/2001 CIA-RDP86-00513R001963520009-6

ZAKHAROV, G. P.

Stars, Variable

Visual observations of variable stars. Article 2. Per. zvezdy 8, No. 4, 1951.

9. Monthly List of Russian Accessions, Library of Congress, May 1953. Unclassified.

APPROVED FOR RELEASE: 03/15/2001 CIA-RDP86-00513R001963520009-6"