"APPROVED FOR RELEASE: 09/19/2001 CIA-RDP86-00513R001963830007-4

ZARUBIN, K.I.

Operational characteristics of the M-47 and M-49 meteorological stations. Meteor. i gidrol. no.2:48-49 F '66. (MIRA 19:1)

1. Verkhne-Volzhskoye upravleniye gidrometeorologicheskoy sluzhby.

APPROVED FOR RELEASE: 09/19/2001 CIA-RDP86-00513R001963830007-4"

"APPROVED FOR RELEASE: 09/19/2001 CIA-RDP86-00513R001963830007-4

L 37187-66 EWT(1)/FCC GW

ACC NR: AP6027809 SOURCE CODE: UR/0050/66/000/002/0048/0049

AUTHOR: Zarubin, K. I.

ORG: Verkhne-Volzhskoye Administration of the Hydrometeorological Service (Verkhne-Volzhskoye UGMS)

TITLE: Operating characteristics of the M-47 and M-49 meteorological stations

SOURCE: Meteorologiya i gidrologiya, no. 2, 1966, 48-49

TOPIC TAGS: meteorologic instrument, meteorologic station/M-47 meteorologic station, M-49 meteorologic station

ABSTRACT: The new meteorological stations M-49 and M-47 are being introduced into the Soviet Meteorological Service; they are reliable in operation, work a long time without need of repair, have good access to parts and are easily adjusted when setting up the station and during its operation. (The article gives little basic description of the apparatus and there is no reference as to where more detailed information can be found.) This communication emphasizes a number of shortcomings of this apparatus and ways in which they can be eliminated. Specific instructions are given on the initial assembly and installation and subsequent adjustment of a number of components in order to ensure correct readings. In addition, there are certain faults in design which can be corrected in the field by small modifications. Orig. art. has: 2 figures. [JPRS]

SUB CODE: 04 / SUBM DATE: none

Card 1/1 UDC: 551.508.85

APPROVED FOR RELEASE: 09/19/2001 CIA-RDP86-00513R001963830007-4"

"APPROVED FOR RELEASE: 09/19/2001 CIA-RDP86-00513R001963830007-4

ZARUBIN, K.I.

Increasing the effectiveness of the use of the "Oblako" and RMGO-A-26 devices. Meteor. i gidrol. no.2:41-42 F '65. (MIRA 18:3)

1. Verkhne-Volzhskoye upravleniye gidrometeorologicheskoy sluzhby.

APPROVED FOR RELEASE: 09/19/2001 CIA-RDP86-00513R001963830007-4"

"APPROVED FOR RELEASE: 09/19/2001 CIA-RDP86-00513R001963830007-4

L 29731-66 EWP(k)/EWT(m)/T-2/EWP(w)/EWP(f)/EWP(v)/EWP(t)/ETI IJP(c) EM/WW/JD

ACC NR: AP6012267 SOURCE CODE: UR/0114/65/000/011/0013/0016

AUTHOR: Shvets, I. T. (Academician); Dyban, Ye. P. (Candidate of technical sciences); Antonenko, F. T. (Engineer); Bumarskov, A. I. (Engineer); Zarubin, L. A. (Engineer); Shpet, N. G. (Engineer)

ORG: none

TITLE: Development and investigation of a system of air cooling of welded rotors for high power gas turbines

SOURCE: Energomashinostroyeniye, no. 11, 1965, 13-16

TOPIC TAGS: turbine rotor, gas turbine, turbine cooling, electronic simulation

ABSTRACT: In the present work, thermal calculation of the cooling system was carried out on a three-dimension electric model, based on the use of a Type EI-12 electronic integrator. A diagram shows the scheme for an electric model of a welded double-disk rotor. Based on experimental results, a figure shows the temperature field for a two-stage rotor; the data were obtained at an overall cooling air rate of 1.865 kg/sec. Conclusions are as follows: 1) use of intensive air cooling of all surfaces permits the fabrication of welded rotors with

Card 1/2 UDC: 62-71.62-253.621.438

APPROVED FOR RELEASE: 09/19/2001 CIA-RDP86-00513R001963830007-4"

"APPROVED FOR RELEASE: 09/19/2001 CIA-RDP86-00513R001963830007-4

L 29731-66

ACC NR: AP6012267

greater rigidity and less weight; 2) use of the modelling system proposed in the article permits development of more reliable and efficient systems of air cooling for two- and four-state rotors for gas turbines; 3) parallel distribution of the cooling air over the stages allows sufficiently uniform temperature fields in all the disks; 4) with the proposed cooling system, use of more heat resistant material for the vanes of the first stage permits raising the temperature of the gas to 850-870°; and, 5) use of the electronic modelling also makes it possible, simply and with sufficient accuracy to determine the temperature field of practically any rotor, with the use of any present type of cooling system. Orig. art. has: 4 figures and 1 table.

SUB CODE: 13, 09 / SUBM DATE: none/ ORIG REF: 006/ OTH REF: 001

Card 2/2

APPROVED FOR RELEASE: 09/19/2001 CIA-RDP86-00513R001963830007-4"

"APPROVED FOR RELEASE: 09/19/2001 CIA-RDP86-00513R001963830007-4

SHVETS, I.T., akademik; DYBAN, Ye.P., kand.tekhn.nauk; ANTONENKO, F.T., inzh.; BUMARSKOV, A.I., inzh.; ZARUBIN, L.A., inzh.; SHPET, N.G., inzh.

Development and study of the air cooling system of the welded rotors of large gas turbines. Energomashinostroenie 11 no.11:13-16 N '65. (MIRA 18:11)

APPROVED FOR RELEASE: 09/19/2001 CIA-RDP86-00513R001963830007-4"

"APPROVED FOR RELEASE: 09/19/2001 CIA-RDP86-00513R001963830007-4

ZARUBIN, L.D., inzh.

Using a movable mold. Transp. stroi. 11 no.7:17-19 Jl '61. (MIRA 14:7)

(Bridges, Concrete) (Prestressed concrete construction)

APPROVED FOR RELEASE: 09/19/2001 CIA-RDP86-00513R001963830007-4"

"APPROVED FOR RELEASE: 09/19/2001 CIA-RDP86-00513R001963830007-4

YEVLEV, V.I., kapitan 2-go ranga; GLUKHOV, G.P., inzh.-kapitan 3-go ranga; ZARUBIN, L.K., kapitan 2-go ranga; TIMASHEV, V.D., kapitan 3-go ranga; KARTSEV, R.P., kapitan 1-go ranga; MICHURIN, V.I., kapitan 1-go ranga.

Matured problems. Mor. sbor. 49 no. 12:49-53 D '65 (MIRA 19:1)

APPROVED FOR RELEASE: 09/19/2001 CIA-RDP86-00513R001963830007-4"

"APPROVED FOR RELEASE: 09/19/2001 CIA-RDP86-00513R001963830007-4

ZARUBIN, L.M.

Automatic electron regulator to control the density of foundry mold ramming. Lit. proizv. no.3:18-19 Mr '61. (MIRA 14:6)
(Molding (Founding)) (Electronic instruments)

APPROVED FOR RELEASE: 09/19/2001 CIA-RDP86-00513R001963830007-4"

"APPROVED FOR RELEASE: 09/19/2001 CIA-RDP86-00513R001963830007-4

VARVARICHEV, A.A.; ZARUBIN, L.M.; SOKOLOV, V.A.

Casting cylinder sleeves in a green sand mold with a shell core. Avt. prom. 31 no.3:39-40 Mr '65. (MIRA 18:7)

1. Yaroslavskiy motornyy zavod.

APPROVED FOR RELEASE: 09/19/2001 CIA-RDP86-00513R001963830007-4"

"APPROVED FOR RELEASE: 09/19/2001 CIA-RDP86-00513R001963830007-4

ZARUBIN, L.S., kand. tekhn. nauk

Preparation characteristics of coals related to their ability to undergo desulfuration. Koks i khim. no.7:8-12 '63. (MIRA 16:8)

1. Institut goryuchikh iskopayemykh.
(Coal preparation) (Desulfuration)

APPROVED FOR RELEASE: 09/19/2001 CIA-RDP86-00513R001963830007-4"

"APPROVED FOR RELEASE: 09/19/2001 CIA-RDP86-00513R001963830007-4

ZARUBIN, L.S., kand. tekhn. nauk

Preparation characteristics of coals related to their ability to undergo desulfuration. Koks i khim. no.7:8-12 '63. (MIRA 16:8)

1. Institut goryuchikh iskopayemykh.
(Coal preparation) (Desulfuration)

APPROVED FOR RELEASE: 09/19/2001 CIA-RDP86-00513R001963830007-4"

"APPROVED FOR RELEASE: 09/19/2001 CIA-RDP86-00513R001963830007-4

ZARUBIN, ~~I.S.,~~ kand. tekhn. nauk; KAMINSKIY, V.S., kand. tekhn.nauk; SHLAU, A.V., inzh.; SHTEYNBERG, D.I., inzh.

Wear of the main joints and parts of a centrifugal coal dewatering filter. Sbor. inform. po obog. i brik. ugl. no.3: 3-10 '57. (MIRA 12:9)

(Coal preparation--Equipment and supplies)
(Centrifuges)

APPROVED FOR RELEASE: 09/19/2001 CIA-RDP86-00513R001963830007-4"

"APPROVED FOR RELEASE: 09/19/2001 CIA-RDP86-00513R001963830007-4

BORTS, M.A.; ZARUBIN, L.S.; DEMIDOV, L.G., otv.red.; TSUKERMAN, S.Ya., red.izd-va; PROZOROVSKAYA, V.L., tekhn.red.; NADEINSKAYA, A.A., tekhn.red.

[Continuous centrifugal settling machines; design and use in the coal mining industry] Shnekovye osaditel'nye tsentrifugi; konstruktsiia i ispol'zovanie v ugol'noi promyshlennosti. Moskva, Gos.nauchno-tekhn.izd-vo lit-ry po gornomu delu, 1960. 61 p. (MIRA 14:2)

(Coal preparation plants--Equipment and supplies)
(Separators (Machines))

APPROVED FOR RELEASE: 09/19/2001 CIA-RDP86-00513R001963830007-4"

"APPROVED FOR RELEASE: 09/19/2001 CIA-RDP86-00513R001963830007-4

ZARUBIN, L.S., kand. tekhn. nauk; KAMINSKIY, V.S., kand. tekhn. nauk; SHLAU, A.V., inzh.

Vibrating centrifuges for dewatering fine coal. Sbor. inform. po obog. i brik. ugl. no.3:11-18 '57. (MIRA 12:9)
(Coal preparation--Equipment and supplies) (Centrifuges)

APPROVED FOR RELEASE: 09/19/2001 CIA-RDP86-00513R001963830007-4"

"APPROVED FOR RELEASE: 09/19/2001 CIA-RDP86-00513R001963830007-4

ZARUBIN, L.S., kand. tekhn. nauk

Dewatering fines. Sbor. inform. po obog. i brik. ugl. no.3: 46-49 '57. (MIRA 12:9)

(Coal preparation)

APPROVED FOR RELEASE: 09/19/2001 CIA-RDP86-00513R001963830007-4"

"APPROVED FOR RELEASE: 09/19/2001 CIA-RDP86-00513R001963830007-4

ZARUBIN, Lev Semenovich; SHLAU, Anatoliy Vladimirovich; DEMIDOV, L.G., otv. red.; TSUKERMAN, S.Ya., red. izd-va; SUKHININA, N.D., tekhn. red.

[Filter centrifuges for the dewatering of fine coals] Fil'trutiu-shchie tsentrifugi dlia obezvozhivaniia melkogo uglia. Moskva, Gos. nauchno-tekhn. izd-vo lit-ry po gornomu delu, 1961. 110 p. (MIRA 14:5)

(Coal preparation) (Centrifuges)

APPROVED FOR RELEASE: 09/19/2001 CIA-RDP86-00513R001963830007-4"

"APPROVED FOR RELEASE: 09/19/2001 CIA-RDP86-00513R001963830007-4

ZARUBIN, L.S., kand.tekhn.nauk; LEYTES, S.Ya., inzh.; NIKANOROVA, L.P., inzh.

Selecting and investigating heavy suspensions for centrifugal coal preparation. Nauch.trudy po obog.i brik.ugl. no.1:61-90 '58. (MIRA 12:10)

(Coal preparation--Equipment and supplies)

APPROVED FOR RELEASE: 09/19/2001 CIA-RDP86-00513R001963830007-4"

"APPROVED FOR RELEASE: 09/19/2001 CIA-RDP86-00513R001963830007-4

BOCHKOV, Yu.N., inzh.; ZARUBIN, L.S., kand. tekhn. nauk; KAMINSKIY, V.S., kand. tekhn. nauk

Mechanism of dewatering coal breeze in screw-type centrifugal settling machines. Obog. i brik. ugl. no.6:20-28 '58. (MIRA 12:7)
(Coal preparation--Equipment and supplies)
(Centrifuges)

APPROVED FOR RELEASE: 09/19/2001 CIA-RDP86-00513R001963830007-4"

"APPROVED FOR RELEASE: 09/19/2001 CIA-RDP86-00513R001963830007-4

BORTS, M.A., inzh.; ZARUBIN, L.S., kand.tekhn.nauk; KAMINSKIY, V.S., kand. tekhn.nauk; KORSAK, L.L., inzh.

Studying the hydrodynamics of liquids in the rotor of a precipitating centrifuge by means of a radioactive isotopes. Sbor. inform. po obog. i brik. ugl. no.4:3-12 '57. (MIRA 11:6)
(Hydrodynamics) (Radioisotopes--Industrial applications)
(Coal preparation--Equipment and supplies)

APPROVED FOR RELEASE: 09/19/2001 CIA-RDP86-00513R001963830007-4"

"APPROVED FOR RELEASE: 09/19/2001 CIA-RDP86-00513R001963830007-4

ZARUBIN, L.S., kand.tkehn.nauk

Laboratory centrifuge for fractional analysis of coal dusts.
Sbor. inform. po obog. i brik. ugl. no.4:31-32 '57. (MIRA 11:6)
(Coal preparation--Equipment and supplies)

APPROVED FOR RELEASE: 09/19/2001 CIA-RDP86-00513R001963830007-4"

"APPROVED FOR RELEASE: 09/19/2001 CIA-RDP86-00513R001963830007-4

ZARUBIN, L.S.

10(4); 21(5); 24(8) PHASE I BOOK EXPLOITATION SOV/2457

Vsesoyuznaya nauchno-tekhnicheskaya konferentsiya po primeneniyu radioaktivnykh i stabil'nykh izotopov i izlucheniy v narodnom khozyaystve i nauke. 2d, Moscow, 1957

Teplotekhnika i gidrodinamika; trudy konferentsii, tom. 4 (Heat Engineering and Hydrodynamics; Transactions of the All-Union Conference on the Use of Radioactive and Stable Isotopes and Radiation in the National Economy and Science, Vol 4) Moscow, Gosenergoizdat, 1958. 88 p. Errata slip inserted. 2,500 copies printed.

Sponsoring Agencies: Akademiya nauk SSSR, and USSR. Glavnoye upravleniye po ispol'zovaniyu atomnoy energii.

Eds.: M. A. Styrikovich (Resp. Ed.), G. Ye. Kholodovskiy, and M. S. Pomichev; Ed. of Publ. House: L. N. Sinel'nikova; Tech. Ed.: N. I. Borunov.

PURPOSE: This collection of articles is intended for scientists and laboratory workers concerned with the use of radioactive and stable isotopes.

COVERAGE: This collection of papers deals with the application of radioactive and stable isotopes as measuring tools in various types of scientific investigation. No personalities are mentioned. References are given after some of the articles.

2. Bartolomey, O.G., Ya.O. Vinokur, V.A. Kolokol'tsev, and V.I. Petukhov. Use of Gamma Rays for Studying the Process of Diffusion 9

3. Kutateladze, S.S., and V.N. Moskvicheva. Use of Gammaradioscopy for Studying the Hydrodynamics of a Multifluid System 12

4. Polstavkin, F.G., and M.A. Shapkin. Method of "Tagged" Atoms for Investigating Water and Steam Content in Surface Boiling of a Fluid 16

5. Kudryavtsev, V.S. Determining the Specific Surface Area of Quartz and Cement Powders by the Sorption Method With the Use of "Tagged" Atoms 20

6. Moskvin, V.N., and I.I. Kurbatova. Use of Radioactive Isotope S^{35} for Studying Sulfate Corrosion of Concrete 28

7. Tsytovich, N.A., V.I. Ferronskiy, and V.A. Lukin. Methods for Determining the Density and Moisture Content of Soils With the Aid of Radioactive Emmisions 33

8. Pologova, L.G., and M.P. Reyzman. Study of the Processes of Moisture Transfer in Building Materials by Means of Gammaradioscopy 38

9. Styrikovich, M.A., I.Kh. Khaybullin, and L. K. Khokhlov. Use of Radioactive Isotopes for Investigating the Solubility of Salts in Water Vapor at High Pressures 41

10. Sterman, L.S., A.Ya. Antonov, and A.V. Surnov. Investigation of the Characteristics of Vapor at a Pressure of 185 abs. atm. With the Aid of Radioactive Isotopes 46

11. Dubrovskiy, V.A. Use of Radioactive Isotopes for Observing the Motion of the Molten Glass Mass in Glass Furnace Tanks 52

12. Rachinskiy, V.V. Use of Radioactive Isotopes in Studying the Filtration of Fluids Through Porous Media 57

13. Leypunskaya, D.I., and A.Ya. Prusilin. Radioisotope Methods for Investigating Flow Processes of Fluids in a Porous Medium 62

14. Bortz, M.A., L.S. Zarubin, V.S. Kazinskiy, and L.L. Korsak. Investigation of the Hydrodynamics of a Fluid in the Conical Rotor of a Settling Centrifuge With the Aid of Radioactive Isotopes 67

15. Volarovich, M.P., N.V. Churayev, and P.Ya. Minkov. Investigations of the Motion of Water in Peat Under Laboratory and Field Conditions With the Use of Radioactive Isotopes 72

16. Arkhangel'skiy, M.M. Use of Radioactive Isotopes for Investigating Suspensions of River Silt 78

17. Veynik, A.I., and A.S. Shubin. Use of Radioactive Isotopes for Investigating the Mechanism of the Drying Process 85

APPROVED FOR RELEASE: 09/19/2001 CIA-RDP86-00513R001963830007-4"

"APPROVED FOR RELEASE: 09/19/2001 CIA-RDP86-00513R001963830007-4

ZARUBIN, L.S., kand. tekhn. nauk; KAMINSKIY, V.S., kand. tekhn. nauk; SHLAU, A.V., inzh.

Operating UTSM-1 screw-type centrifugal settling machines in coal preparation plants. Obog. i brik. ugl. no.6:29-33 '58. (MIRA 12:7)

(Coal preparation--Equipment and supplies)
(Centrifuges)

APPROVED FOR RELEASE: 09/19/2001 CIA-RDP86-00513R001963830007-4"

"APPROVED FOR RELEASE: 09/19/2001 CIA-RDP86-00513R001963830007-4

ZARUBIN, L.S., kand. tekhn. nauk; KAMINSKIY, V.S., kand. tekhn. nauk

Vibrating centrifuge for dewatering coal pulp. Obog. i brik. ugl. no.6:34-36 '58. (MIRA 12:7)
(Coal preparation--Equipment and supplies)
(Centrifuges)

APPROVED FOR RELEASE: 09/19/2001 CIA-RDP86-00513R001963830007-4"

"APPROVED FOR RELEASE: 09/19/2001 CIA-RDP86-00513R001963830007-4

APPROVED FOR RELEASE: 09/19/2001 CIA-RDP86-00513R001963830007-4"

"APPROVED FOR RELEASE: 09/19/2001 CIA-RDP86-00513R001963830007-4

SHLAU, A.V.; ZARUBIN, L.S.; TROFIMOV, V.A.

[Filtrating centrifuges for the dewatering of coal] Fil'truiushchie tsentrifugi dlia obezvozhivaniia uglia. Moskva, Nedra, 1965. 134 p. (MIRA 18:5)

APPROVED FOR RELEASE: 09/19/2001 CIA-RDP86-00513R001963830007-4"

"APPROVED FOR RELEASE: 09/19/2001 CIA-RDP86-00513R001963830007-4

ZARUBIN, M.; TISHCHENKO, D.

Alkaline hydrolysis of Scholler's lignin resulting in the formation of low molecular weight substances. Zhur. prikl. khim. 33 no.11:2576-2581 N '60. (MIRA 14:4)
(Lignin)

APPROVED FOR RELEASE: 09/19/2001 CIA-RDP86-00513R001963830007-4"

"APPROVED FOR RELEASE: 09/19/2001 CIA-RDP86-00513R001963830007-4

ZARUBIN, M.; TISHCHENKO, D.

Hypothesis for the alkaline condensation of lignin. Zhur. prikl. khim. 34 no.1:194-199 Ja '61. (MIRA 14:1)
(Ligin)

APPROVED FOR RELEASE: 09/19/2001 CIA-RDP86-00513R001963830007-4"

"APPROVED FOR RELEASE: 09/19/2001 CIA-RDP86-00513R001963830007-4

AUTHORS: Zarubin, M., Tishchenko, D. SOV/80-32-2-29/56

TITLE: Alkaline Hydrolysis of Scholler Lignin With the Production of Low-Molecular Substances (Shchelochnoy gidroliz lignina Sholler a polucheniyem nizkomolekulyarnykh veshchestv)

PERIODICAL: Zhurnal prikladnoy khimii, 1959, Vol XXXII, Nr 2, pp 395-399 (USSR)

ABSTRACT: Heating of technical ligninsin alkaline solution produces low-molecular compounds of phenol type. Their molecular weight is 400 or less. The ether-soluble compounds contain 75% C and 6.3% H. These substances exceed 50% of the lignin weight. There is 1 table and 14 references, 6 of which are Soviet, 4 Swedish, 2 German, 1 Canadian, and 1 Finnish.

SUBMITTED: August 29, 1957

Card 1/1

APPROVED FOR RELEASE: 09/19/2001 CIA-RDP86-00513R001963830007-4"

"APPROVED FOR RELEASE: 09/19/2001 CIA-RDP86-00513R001963830007-4

1. ZARUBIN, M.P.

2. USSR (600)

4. Medicine

7. Search for and introduction of new medicinal plants into cultivation. Riga, Izdatel'-stvo. AN Latviiskoi SSSr,1952

9. Monthly List of Russian Accessions, Library of Congeess,February,1953.Unclassified.

APPROVED FOR RELEASE: 09/19/2001 CIA-RDP86-00513R001963830007-4"

"APPROVED FOR RELEASE: 09/19/2001 CIA-RDP86-00513R001963830007-4

ZARUBIN, M. Ya.

Cand Chem Sci - (diss) "Alkaline hydrolysis of Sholler's lignin with the production of low-molecular substances." Riga, 1961. 15 pp; (Academy of Sciences Latvian SSR, Inst of Forestry Engineering Problems and the Chemistry of Wood); 150 copies; free; (KL, 6-61 sup, 198)

APPROVED FOR RELEASE: 09/19/2001 CIA-RDP86-00513R001963830007-4"

"APPROVED FOR RELEASE: 09/19/2001 CIA-RDP86-00513R001963830007-4

ZARUBIN, M.Ya.; TISHCHENKO, D.V.

Soda cooking of spruce wood with the addition of phenols. Zhur.-prikl.khim. 35 no.12:2724-2729 D '62. (MIRA 16:5)
(Spruce) (Lignin) (Phenols)

APPROVED FOR RELEASE: 09/19/2001 CIA-RDP86-00513R001963830007-4"

"APPROVED FOR RELEASE: 09/19/2001 CIA-RDP86-00513R001963830007-4

ZARUBIN, N., prokuror

Classification of crimes connected with fires. Pozh. delo 7 no. 1:10-11 Ja '60. (MIRA 14:2)

1. Otdel prokuratury RSFSR.
(Fire prevention--Laws and legislation)

APPROVED FOR RELEASE: 09/19/2001 CIA-RDP86-00513R001963830007-4"

"APPROVED FOR RELEASE: 09/19/2001 CIA-RDP86-00513R001963830007-4

NADEZHIN, N.; ZARUBIN, N.

Criminal investigation of fire cases. Pozh.delo 7 no.6:7-8 Je '61. (MIRA 14:6)

1. Starshiy pomoshchnik prokurora RSFSR (for Nadezhin).
2. Pomoshchnik prokurora RSFSR (for Zarubin).

(Arson)
(Criminal investigation)

APPROVED FOR RELEASE: 09/19/2001 CIA-RDP86-00513R001963830007-4"

"APPROVED FOR RELEASE: 09/19/2001 CIA-RDP86-00513R001963830007-4

ZARUBIN, N.

Improve the organization of material and technical supplies.
Mor.flot 22 no.12:12-14 D '62. (MIRA 15:12)

1. Starshiy inzh. Glavnogo upravleniya material'no-tekhnicheskogo snabzheniya Ministerstva morskogo flota.
(Merchant marine—Equipment and supplies)

APPROVED FOR RELEASE: 09/19/2001 CIA-RDP86-00513R001963830007-4"

"APPROVED FOR RELEASE: 09/19/2001 CIA-RDP86-00513R001963830007-4

KULIKOV, V.O.; BORNATSKIY, I.I.; ZARUBIN, N.G.; DOROFEYEV, G.A.; KALUZHSKIY, Ye.A.; KAZAKOV, A.A.; KOVAL', R.F.; KORNEVA, N.K.; TRET'YAKOV, Ye.V.; TRUNOV, Ye.A.; Prinimali uchastiye: ANDREYEV, V.L.; GORDIYENKO, V.V.; GRINEVICH, I.P.; GUBAR', V.F.; DOLINENKO, V.I.; ZHERNOVSKIY, V.S.; ZHIGALOVA, Z.I.; KOMOV, N.G.; KURAPIN, B.S.; OLESHKEVICH, T.I.; PRIKHOZHENKO, Ye.

Mastering the operations of 650- and 900-ton (mega - gram) capacity open-hearth furnaces at the Il'ich metallurgical plant. Stal' 25 no.8:805-807 S '65. (MIRA 18:9)

1. DONNIICHERMET i Zhdanovskiy metallurgicheskiy zavod imeni Il'icha.

APPROVED FOR RELEASE: 09/19/2001 CIA-RDP86-00513R001963830007-4"

"APPROVED FOR RELEASE: 09/19/2001 CIA-RDP86-00513R001963830007-4

YEFIMOV, V.A., doktor tekhn. nauk; KUZEMA, I.D., kand. tekhn. nauk; ZHIGULA, A.V., inzh.; SAPKO, V.N., inzh.; KISSEL', N.N., inzh.; CHERNYSHEV, I.S., inzh.; ZARUBIN, N.G., inzh.; STRYAPIN, I.Ya., inzh.; OLESHKEVICH, T.I., inzh.; SONIN, G.V., inzh.; PUKALOV, V.P., inzh.

Rapid top pouring of rimmed steel from ladles with a capacity from 350 to 480 tons. Stal' 24 no.1:30-32 Ja '64. (MIRA 17:2)

APPROVED FOR RELEASE: 09/19/2001 CIA-RDP86-00513R001963830007-4"

"APPROVED FOR RELEASE: 09/19/2001 CIA-RDP86-00513R001963830007-4

ZARUBIN, N. M.

Mor., Central Sci. Res. Inst. Technology and Machine Constr., -c1948-.

Mor., Milling Plant, -c1948-.

"The Use of Inhibiting Solutions for the Preparation of Metallographic Microsections," Zavod, Lab., 14, No. 2, 1948;

"Metallographic Study of Solid Alloys of the Metalloceramic Type," ibid., No. 12, 1948.

APPROVED FOR RELEASE: 09/19/2001 CIA-RDP86-00513R001963830007-4"

"APPROVED FOR RELEASE: 09/19/2001 CIA-RDP86-00513R001963830007-4

USSR/Metals - Iron, Alloys, Properties Oct 51

"Investigation of Ferrous Alloys With High Content of Carbon and Chromium," N. M. Zarubin, Ye. A. Ivanov, Engineers, S. Ye. Rozenfel'd, Cand Tech Sci, TsNIITMASh

"Litey Proizvod" No 10, pp 26-28

Alloys with 2-4% and 9-10% Cr were investigated to find alloys with high hardness, high abrasive wear-resistance and wear-resistance at high temps. Interprets results. Increase in carbon content decreases uniformity in distribution of chromium

198T71

USSR/Metals - Iron, Alloys, Properties Oct 51
(Contd)

carbides in metal base, and considerably enlarges them. Inoculation of alloys with magnesium greatly reduces carbide phase to finer state.

198T71

ZARUBIN, N. M.

APPROVED FOR RELEASE: 09/19/2001 CIA-RDP86-00513R001963830007-4"

"APPROVED FOR RELEASE: 09/19/2001 CIA-RDP86-00513R001963830007-4

ZARUBIN, N. M.
KLAZ, N. Ye.

METALLOGRAPHY

New method of preparing metallographic cuts from ferrous metals. Vest. mash. 31 no. 12 (1951)

Monthly List of Russian Accessions, Library of Congress September 1952 UNCLASSIFIED.

APPROVED FOR RELEASE: 09/19/2001 CIA-RDP86-00513R001963830007-4"

"APPROVED FOR RELEASE: 09/19/2001 CIA-RDP86-00513R001963830007-4

ZARUBIN, N.M., inzhener; TSYPIN, I.O., kandidat tekhnicheskikh nauk.

Effect of heat treatment on the structure and mechanical properties of spheroidal graphite cast iron. [Trudy] TSNIITMASH no.55: 55-69 '55. (MLRA 7:7)
(Cast iron--Heat treatment)

APPROVED FOR RELEASE: 09/19/2001 CIA-RDP86-00513R001963830007-4"

"APPROVED FOR RELEASE: 09/19/2001 CIA-RDP86-00513R001963830007-4

APPROVED FOR RELEASE: 09/19/2001 CIA-RDP86-00513R001963830007-4"

"APPROVED FOR RELEASE: 09/19/2001 CIA-RDP86-00513R001963830007-4

Zarubin, N.M.

AUTHOR: Zarubin, N.M., Engineer 26-4-14/35

TITLE: Classification of Structure Components in Castings of Gray Iron and High-Strength Iron (Klassifikatsiya strukturnykh sostavlyayushchikh otlivok iz serogo i vysokoprochnogo chuguna)

PERIODICAL: Standartizatsiya, 1957, # 4, pp 53-56 (USSR)

ABSTRACT: The standard ГОСТ 3443-46 is superseded by ГОСТ 3443-57 - for methods of structural evaluation of gray cast iron (with laminar graphite) and high-strength cast iron (with globular graphite). The new standard is in 3 parts with 10 scales of structure microphotographs (maghified 1,000-times and 400-times) and 14 tables for evaluations by pearlite, eutectic phosphide, cementite and graphite. The project for this new standard was developed by TsNIITMASh.

The former graphite classification was done by 8 standards, as in the American practice (ASTM A 247-47 Rec.Practice for Evaluating the Microstructure of Graphite in Gray Iron). The new standard provides more detailed differentiation in gray iron with 10 ranges of length of the graphite inclusions. There are 5 evaluations for high strength iron two of which are by the deviation of the inclusions from the globular shape, and three - by combinations of the laminar and globular graphite.

Card 1/2

APPROVED FOR RELEASE: 09/19/2001 CIA-RDP86-00513R001963830007-4"

"APPROVED FOR RELEASE: 09/19/2001 CIA-RDP86-00513R001963830007-4

28-4-14/35

Classification of Structure Components in Castings of Gray Iron and High-Strength Iron

The permissible shape of graphite in castings will be specified for each individual case.

The article includes an explanation of the designation system introduced by the new standard (that of the superceded standard with amendments). The letters indicate the structure elements, and the figures following the letters - the corresponding parameters. Examples are given.

ГОСТ 3443-57 is in effect from 1 September 1957 on. The old standard was worked out by Ye.M. Rozenberg and M.N. Kunyavskiy.

The Czechoslovakian and Polish standards for cast iron are said to correspond to the now-obsolete 1946 Soviet standard.

There is one table and one American reference.

ASSOCIATION: TsNIITMASh

AVAILABLE: Library of Congress

Card 2/2

APPROVED FOR RELEASE: 09/19/2001 CIA-RDP86-00513R001963830007-4"

"APPROVED FOR RELEASE: 09/19/2001 CIA-RDP86-00513R001963830007-4

ZARUBIN, N.

Save in every way possible the supplies of materials.
Mor. flot. 24 no.5:12-14 My '64.
(MIRA 18:12)

1. Starshiy inzh. Glavnogo upravleniya material'no-tekhnicheskogo snabzheniya Ministerstva morskogo flota SSSR.

APPROVED FOR RELEASE: 09/19/2001 CIA-RDP86-00513R001963830007-4"

"APPROVED FOR RELEASE: 09/19/2001 CIA-RDP86-00513R001963830007-4

KORNEVA, N.K.; GRINEVICH, I.P.; DOROFEYEV, G.A.; ZARUBIN, N.G.; LEPORSKIY, S.V.

An efficient design of the parts of high-capacity open-hearth furnaces. Metallurg 10 no.8:23-24 Ag '65.

(MIRA 18:8)

1. DonNIICHermet i zavod im. Il'icha.

APPROVED FOR RELEASE: 09/19/2001 CIA-RDP86-00513R001963830007-4"

"APPROVED FOR RELEASE: 09/19/2001 CIA-RDP86-00513R001963830007-4

Production of compact tungsten metal. N. M. Zarubin and I. P. Molkov. *Tsvetnyi Metal* 6, 1232-38(1931). *Chemie et Industrie* 27, 1081-2(1932).—A general description of the process.
A. Papineau-Couture

ASM-SLA METALLURGICAL LITERATURE CLASSIFICATION

APPROVED FOR RELEASE: 09/19/2001 CIA-RDP86-00513R001963830007-4"

"APPROVED FOR RELEASE: 09/19/2001 CIA-RDP86-00513R001963830007-4

1ST AND 2ND ORDERS

3RD AND 4TH ORDERS

PROCESSES AND PROPERTIES INDEX

BC

B-I-6

Action of sulphur on non-ferrous alloys. T. P. Podolski and N. H. Zarubin (Vestn. Metalloprom., 1931, 11, No. 5, 57—62).—Metal rods were heated in sealed tubes with S at 600°; Cu (2—3 mm. diam.) was completely converted into Cu_2S, whilst Ni becomes coated with Ni_2S below 600° and Ni_2S_3 above 600°. Ni-Cu alloys containing solid solutions become covered with an outer layer of Cu_2S and an inner layer of Ni sulphide. With a W-Ni alloy, forming definite compounds, no zonal separation of the sulphides was observed. Ch. Abs.

COMMON ELEMENTS

COMMON VARIABLES INDEX

MATERIALS INDEX

ASS-SLA METALLURGICAL LITERATURE CLASSIFICATION

AUTHOR INDEX

1ST AND 2ND LETTER

APPROVED FOR RELEASE: 09/19/2001 CIA-RDP86-00513R001963830007-4"

"APPROVED FOR RELEASE: 09/19/2001 CIA-RDP86-00513R001963830007-4

PROCESSES AND PROPERTIES INDEX

3

Metallographic Investigation of Tungsten Wire with Addition of Thoria. N. M. Zarubin and A. N. Koptzik (*Zvetnye Metally* (*The Non-Ferrous Metals*), **1932**, (5/6), 59–66; *C. Abs.*, 1934, **28**, 2308).—[In Russian.] A discussion of the microstructure of tungsten wire with addition of ThO_2, SiO_2, and K_2O. More pores were observed in wires prepared from cheaper grades of tungsten contaminated with aluminium, molybdenum, iron, &c. The number of pores was found to be greater the finer the grain. S. G.

ASM-SLA METALLURGICAL LITERATURE CLASSIFICATION

APPROVED FOR RELEASE: 09/19/2001 CIA-RDP86-00513R001963830007-4"

"APPROVED FOR RELEASE: 09/19/2001 CIA-RDP86-00513R001963830007-4

Application of tungsten wire in the electrical industry and principles of its heat treatment. N. M. Zarubin and A. N. Kopezik. *Tsvetnaie Metal* 1932, 180-204. Recent progress in the manuf. and heat treatment of tungsten wire is reviewed. An app. and the method for measuring the sag in tungsten wire are described. Heat treating expts. are described for controlling the grain size of wires with the addn. of K_2O, SiO_2 and ThO_2. Photomicrographs and bibliography are given. B. N.

ASM-SLA METALLURGICAL LITERATURE CLASSIFICATION

APPROVED FOR RELEASE: 09/19/2001 CIA-RDP86-00513R001963830007-4"

"APPROVED FOR RELEASE: 09/19/2001 CIA-RDP86-00513R001963830007-4

M

Determination of Size of Particles in Metallic Powders. N. M. Zarubin (*Zavodskaya Lab.*, **1933**, (2), 29-34).—[In Russian.] The Stokes, the microscopic, and the chemical rate of solution methods were used to determine the size of particles in tungsten, molybdenum, cobalt, nickel, and other powders.—S. G.

ASM-SLA METALLURGICAL LITERATURE CLASSIFICATION

APPROVED FOR RELEASE: 09/19/2001 CIA-RDP86-00513R001963830007-4"

"APPROVED FOR RELEASE: 09/19/2001 CIA-RDP86-00513R001963830007-4

1ST AND 2ND ORDERS

PROCESSES AND PROPERTIES INDEX

3RD AND 4TH ORDERS

m

3

***Laminated Fracture in Super-Hard Alloys of the Metallo-Ceramic Type.** N. M. Zarubin and V. I. Tretiakov (*Redkie Metalli* (*Rare Metals*), 1938, (3), 16-21).—[In Russian.] Discusses the macro- and micro-structures of fractures of the hard alloys Pobedit, Carboloy, and Widia. The laminated fracture is explained primarily by the presence of free carbon in the alloys and the decarburization due to irregularities in the sintering process of production of the alloys.—D. N. S.

ASM-SLA METALLURGICAL LITERATURE CLASSIFICATION

APPROVED FOR RELEASE: 09/19/2001 CIA-RDP86-00513R001963830007-4"

"APPROVED FOR RELEASE: 09/19/2001 CIA-RDP86-00513R001963830007-4

M

2

Alloys of the Ceramico-Metal Type. N. Zarubin and L. Malkov (*Vestnik Metallopromishlennosti* (*Messenger of the Metal Industry*), 1933, (6), 68-71).—[In Russian.] A brief review of the production methods, microstructure, and properties of super-hard alloys, *e.g.* "Pobedite," "Widia," "Carboloy," "Ramet," "Titanite," and others.—D. N. *f*.

ASM-SLA METALLURGICAL LITERATURE CLASSIFICATION

APPROVED FOR RELEASE: 09/19/2001 CIA-RDP86-00513R001963830007-4"

"APPROVED FOR RELEASE: 09/19/2001 CIA-RDP86-00513R001963830007-4

Etching Polish for the Preparation of Metallographic Samples. N. Zarulin, M. Suitin, and N. Golikov (*Zavodskaya Lab.*, 1933, (7), 49–53; *C. Abs.*, 1934, **28**, 7231).—[In Russian.] Osmond's method of polishing samples for metallographic analysis with an etching polish was used successfully not only for metals such as tungsten, molybdenum, tantalum, vanadium, &c., but for non-ferrous metals and alloys such as copper, aluminium, nickel, tin, lead, bronze, &c. 10 references are given.—S. G.

ASB-SLA METALLURGICAL LITERATURE CLASSIFICATION

APPROVED FOR RELEASE: 09/19/2001 CIA-RDP86-00513R001963830007-4"

"APPROVED FOR RELEASE: 09/19/2001 CIA-RDP86-00513R001963830007-4

PROCESSES AND PROPERTIES INDEX

2

***Cast Hard Alloys (Volomit, Perdurum, Voiramit, Relit).** N. Zarubin and I. Raikhlin (*Redkie Metally* (*Rare Metals*), **1934**, (1), 34–42). [In Russian.] From a microscopical study of cast hard alloys with a tungsten carbide basis their porosity is proved to be greater than that of sintered alloys (Widia, Carboloy, Pobedit), of alloys produced by hot-pressing and of alloys of the Stellite type. The outside of castings is more porous, and consists chiefly of tungsten carbide (WC) with excess of carbon, whereas the central portion appears to consist of the two carbides WC and W_2C. Alloys cast into octagonal or ovoid moulds contain more carbon than those cast into cylindrical moulds. As the volume of the casting is increased, so the carbon content diminishes. Owing to casting difficulties, the alloys are often non-homogeneous in composition and properties, but good castings have a Rockwell-C hardness of 90–95. —D. N. S.

ASM-SLA METALLURGICAL LITERATURE CLASSIFICATION

APPROVED FOR RELEASE: 09/19/2001 CIA-RDP86-00513R001963830007-4"

"APPROVED FOR RELEASE: 09/19/2001 CIA-RDP86-00513R001963830007-4

1ST AND 2ND ORDERS

PROCESSES AND PROPERTIES INDEX

3RD AND 4TH ORDERS

m

3

On the Metallographic Method of Investigating Hard Metals. N. M. Zarubin. (*Zavodskaia Laboratoria* (*Works' Laboratory*), 1934, 3, 919-926).—[In Russian.] The methods used in the U.S.S.R. for preparing polished sections and etching hard alloys are surveyed, and the structural characteristics of these alloys are described. A *bibliography* is appended. D. N. S.

ASM-SLA METALLURGICAL LITERATURE CLASSIFICATION

APPROVED FOR RELEASE: 09/19/2001 CIA-RDP86-00513R001963830007-4"

"APPROVED FOR RELEASE: 09/19/2001 CIA-RDP86-00513R001963830007-4

PROCESSES AND PROPERTIES INDEX

3

*Comparative Metallographic Study of Hard Alloys of the Stellite Type [Sormite, Celsite, Acrite, Reinite, Studite]. N. Zarubin and Ya. Raikhlin (*Zavodskaya Lab.*, 1934, 3, 141–152; *C. Abs.*, 1935, 29, 98).—[In Russian.] The results of metallographic tests of alloys of the Stellite type, such as Sormite, Celsite, Acrite, Reinite, and Studite, by etching with various common reagents, are shown by 28 photographs. A number of references is given.—S. G.

ASM-SLA METALLURGICAL LITERATURE CLASSIFICATION

APPROVED FOR RELEASE: 09/19/2001 CIA-RDP86-00513R001963830007-4"

"APPROVED FOR RELEASE: 09/19/2001 CIA-RDP86-00513R001963830007-4

PROCESSES AND PROPERTIES INDEX

Metallography of Tantalum. N. M. Zarubin and M. V. Sutin (*Zavodskaya Lab.*, 1934, 3, 821–830; *C. Abs.*, 1935, 29, 1042). [In Russian.] The felt polishing operation can be reduced from 1–2 hrs. to 5–10 minutes by the use of a mixture of 25 grm. alumina (No. 1 or 2), 20 c.c. of 60% hydrofluoric acid, 20 c.c. of ammonium fluoride, and 1 litre of water. A mixture of equal parts of 20% ammonium fluoride and 60% hydrofluoric acid in the cold is ineffective; at 50°–60° C. it etches within 0.5–1 minute, showing the structure of pure and impure tantalum without colouring Ta_2S_5 inclusions. One part of 20%

ASM-SLA METALLURGICAL LITERATURE CLASSIFICATION

APPROVED FOR RELEASE: 09/19/2001 CIA-RDP86-00513R001963830007-4"

"APPROVED FOR RELEASE: 09/19/2001 CIA-RDP86-00513R001963830007-4

B-I-4

Metallographic examination of hard alloys. E. M. ZARUBIN (Zavod. Lab., 1934, 3, 919—926).—The technique of preparing polished and etched hard-steel surfaces is described, and photomicrographs of such surfaces are given. R. T.

ASM-SLA METALLURGICAL LITERATURE CLASSIFICATION

APPROVED FOR RELEASE: 09/19/2001 CIA-RDP86-00513R001963830007-4"

"APPROVED FOR RELEASE: 09/19/2001 CIA-RDP86-00513R001963830007-4

Metallographic examination of hard alloys. N. M. Zarubin. *Zavodskaya Lab.* 3, 919-26(1934); cf. C. A. 29, 1002[illegible].—The technic of prepg. polished and etched hard-steel surfaces is described and photomicrographs of such surfaces are given.
B. C. A.

ASM-SLA METALLURGICAL LITERATURE CLASSIFICATION

APPROVED FOR RELEASE: 09/19/2001 CIA-RDP86-00513R001963830007-4"

"APPROVED FOR RELEASE: 09/19/2001 CIA-RDP86-00513R001963830007-4

PROCESSES AND PROPERTIES INDEX

M

2

"Investigation of Alloys Prepared by Sintering. N. Zarubin and L. Molkov (*Vestnik Metallopromishlennosti* (*Messenger Metal Ind.*), 1936, 16, (7), 59–68).—[In Russian.] The microstructure of the alloys of cobalt with the carbides of molybdenum, tantalum, and titanium prepared by sintering mixtures of the powdered constituents at 1450° C. for 1·5 hrs. has been examined. In the molybdenum carbide system the solid solution extends to 6% Mo_2C and the eutectic occurs at 30% Mo_2C. X-ray investigation indicates that up to 6% Mo_2C the cobalt exists in only one form, but with higher contents of Mo_2C a second modification of cobalt appears. Cobalt dissolves 6% of TaC and the eutectic occurs at 25% TaC. The alloys of the system TiC–Co within the limits of 5–95% of TiC consist of two phases.—D. N. S.

N.S.A. METALLURGICAL LITERATURE CLASSIFICATION

APPROVED FOR RELEASE: 09/19/2001 CIA-RDP86-00513R001963830007-4"

"APPROVED FOR RELEASE: 09/19/2001 CIA-RDP86-00513R001963830007-4

PROCESSES AND PROPERTIES INDEX

2

***Study of Diagrams of State of the System Chromium-Cobalt and Chromium-Nickel Carbides.** N. M. Zambin and R. A. Trubnikov (*Redkie Metally* (*Rare Metals*), 1955, (2), 38-40).—[In Russian.] Chromium carbide was obtained by sintering carbon and chromium for 1-2 hrs. at 1500° C., or by sintering carbon and chromium oxide at the same temperature for 2-3 hrs. A mixture of Cr_7C_3 and Cr_3C_2 was obtained which, according to X-ray analysis, contained 13·1-13·0% carbon. The carbide sintered with the corresponding metal at 1450°-1600° C., the temperature depending on the carbide content. The solubility of chromium carbide in cobalt was found by microscopic examination to be 8%. The eutectic of cobalt carbide and cobalt solid solution was found to be at 35% carbide and 1415° C. The solubility of chromium carbide in nickel is 8%; the eutectic is at 30% carbide and 1375° C.

D. N. S.

ASM-SLA METALLURGICAL LITERATURE CLASSIFICATION

APPROVED FOR RELEASE: 09/19/2001 CIA-RDP86-00513R001963830007-4"

"APPROVED FOR RELEASE: 09/19/2001 CIA-RDP86-00513R001963830007-4

B-I-4

Alloys prepared by ceramic methods. N. M. ZARUBIN and M. SUTIN (Rolk. Metal, 1935, 4, No. 4, 21—25).—Alloys of WC and Fe containing 5—90% of WC, and of Mo_2C and Fe containing 2—90% of Mo_2C, were prepared by sintering at 1450° for 1·5 hr. The solubility of WC in Fe is 5%; that of Mo_2C in Fe is 2%. Both systems form eutectics containing about 30% of carbide. CH. ABS. (e)

ASM-SLA METALLURGICAL LITERATURE CLASSIFICATION

APPROVED FOR RELEASE: 09/19/2001 CIA-RDP86-00513R001963830007-4"

"APPROVED FOR RELEASE: 09/19/2001 CIA-RDP86-00513R001963830007-4

PROCESSES AND PROPERTIES INDEX

"On the Problem of Producing Hard Alloys with a Tungsten Carbide Basis by the Method of Hot-Pressing. B. A. Borok and N. M. Zarubin (*Nicmash Bull. Sci. Res. Inst. Machine-Building and Metal-Treatment*), [illegible] (4), 28-35).—[In Russian.] Hot-pressing is technically and economically unprofitable for hard alloys with a relatively low-melting bond, but it can be rationally applied for the production of hard alloys of the cast type. The hardness and tenacity of hot-pressed alloys are higher than those of cast alloys. N. A.

ASM-SLA METALLURGICAL LITERATURE CLASSIFICATION

APPROVED FOR RELEASE: 09/19/2001 CIA-RDP86-00513R001963830007-4"

"APPROVED FOR RELEASE: 09/19/2001 CIA-RDP86-00513R001963830007-4

On Methods for the Metallographic Examination of Hard Alloys (the WC-Fe and Mo_2C-Fe Systems). N. M. Zarubin and M. V. Sitin (*Zavodskaia Laboratoria* (*Works' Lab.*), 1935, 4, (4), 431–437).—[In Russian.] The best etching reagents for this type of alloy are: (1) a 5% solution of potassium ferricyanide in 5% sodium hydroxide; (2) 2% alcoholic picric acid; (3) 3% alcoholic nitric acid; (4) a mixture of reagents (2) and (3); (5) *aqua regia*; (6) a 7 : 3 mixture of hydrofluoric and nitric acids. Reagents (1), (2), and (4) are particularly useful for developing the eutectic structure, reagents (1) and (2) for revealing the presence of excess of carbide, reagent (3) for revealing heterogeneity in the solid solution and identifying the eutectic boundaries, and reagent (7) for rapidly attacking the eutectic. Numerous photomicrographs are included to illustrate the properties of the different etching reagents.—D. N. S.

APPROVED FOR RELEASE: 09/19/2001 CIA-RDP86-00513R001963830007-4"

"APPROVED FOR RELEASE: 09/19/2001 CIA-RDP86-00513R001963830007-4

1ST AND 2ND ORDERS

PROCESSES AND PROPERTIES INDEX

3RD AND 4TH ORDERS

BC

8-I-4

Production of high-quality hard alloys. N. M. Zaburin (Redk. Metal. 1935, 4, No. 6, 18—23).—Presence of free C in the WC-Co mixture causes a porous microstructure. Presence of free W and Co oxide causes segregation in the sintered alloy.

Ch. Abs. (e)

COMMON ELEMENTS

COMMON VARIABLES INDEX

MATERIALS INDEX

ASM-SLA METALLURGICAL LITERATURE CLASSIFICATION

AUTHOR INDEX

APPROVED FOR RELEASE: 09/19/2001 CIA-RDP86-00513R001963830007-4"

"APPROVED FOR RELEASE: 09/19/2001 CIA-RDP86-00513R001963830007-4

m

More on the Method of Etching Polishing in Metallographic Grinding. N. M. Zarulin and M. V. Sitin (*Zavodskaia Laboratoriia* (*Works' Lab.*), 1930, 4, 786–799).—[In Russian.] Discusses the theory and practice of etching and polishing of metal specimens; reagents used in etching of anti-friction alloys, aluminium and copper and their alloys, iron, tantalum, tungsten, molybdenum and hard alloys, and gives photomicrographs of polished surfaces of the above metals and alloys.—D. N. S.

APPROVED FOR RELEASE: 09/19/2001 CIA-RDP86-00513R001963830007-4"

"APPROVED FOR RELEASE: 09/19/2001 CIA-RDP86-00513R001963830007-4

PROCESSES AND PROPERTIES INDEX

3

On the Metallographic Examination of Graphitic Products of the Metallo-ceramic Type (Metallized Graphite Bearings). N. M. Zarubin (*Zavodskaya Laboratoriya* (*Works' Lab.*), 1935, 4, (12), 1474–1479).—[In Russian.] Methods are described for polishing and etching the surfaces of alloys produced by sintering mixtures of powdered metals and alloys with graphite.—D. N. S.

ASM-SLA METALLURGICAL LITERATURE CLASSIFICATION

APPROVED FOR RELEASE: 09/19/2001 CIA-RDP86-00513R001963830007-4"

"APPROVED FOR RELEASE: 09/19/2001 CIA-RDP86-00513R001963830007-4

M

The Facing of Articles by Welding on "Vokar" Alloy. N. M. Zarubin. (*Redkie Metally* (*Rare Metals*), 1935, (5), 48–51).—[In Russian.] Micrographic examination of welded joints between iron and the hard alloy "Vokar" shows the presence of WC but not of W_2C; the former dissolves to the extent of about 5% in the surface layers of the iron. Subsequent layers become gradually richer in WC and pass through the eutectic composition into the zone of hard alloy free from iron.—D. N. S.

METALLURGICAL LITERATURE CLASSIFICATION

APPROVED FOR RELEASE: 09/19/2001 CIA-RDP86-00513R001963830007-4"

"APPROVED FOR RELEASE: 09/19/2001 CIA-RDP86-00513R001963830007-4

On Rejections in the Production of Hard Alloys of Metallo-Ceramic Type. N. M. Zarubin (*Redkie Metalli* (*Rare Metals*), 1933, (6), 18-23).—[In Russian.] Examination of the microstructure of hard tungsten carbide alloys prepared in various ways indicated that porosity is due to large grain-size of the tungsten carbide, and to the presence therein of free carbon. Free carbon also reduces the hardness, and shrinkage increases the brittleness and renders the alloys chemically and physically heterogeneous. On the other hand, free tungsten in the carbide or the presence of oxides in the nickel or cobalt "cement" cause cleavage of the alloy. The sintering temperature and the nature of the atmosphere in the furnace also have a considerable influence in presence of oxides on the development of cleavage.—D. N. S.

APPROVED FOR RELEASE: 09/19/2001 CIA-RDP86-00513R001963830007-4"

"APPROVED FOR RELEASE: 09/19/2001 CIA-RDP86-00513R001963830007-4

3

***An Investigation of [Hard] Alloys Prepared by the Sintering Method.** N. M. Zarubin and L. P. Molkov (*Vestnik Metallopromishlennosti* (*Messenger Metal Ind.*), 1935, 15, (7), 93–98).—[In Russian.] Micrographic examination of the structure of pseudo-binary alloys of tungsten, molybdenum, tantalum, and titanium carbides with nickel indicates that the solubility of these carbides in nickel is WC 25%, Mo_2C 12% (eutectic at 30% Mo_2C), TaC 20% (eutectic at 35–40% TaC), and TiC almost insoluble. X-ray examination of alloys of nickel containing more than 40% TaC (obtained by sintering at 1600°–1650° C.) indicates the formation of a new compound of unknown composition. The paper contains 48 photomicrographs of representative structures.—D. N. S.

ASM-SLA METALLURGICAL LITERATURE CLASSIFICATION

APPROVED FOR RELEASE: 09/19/2001 CIA-RDP86-00513R001963830007-4"

"APPROVED FOR RELEASE: 09/19/2001 CIA-RDP86-00513R001963830007-4

Change in structure and mechanical properties of molybdenum due to forging, drawing and heat-treating. A. N. Koptsik and N. M. Zarubin. *Vestnik Metallo-prom.* (U. S. S. R.) 17, No. 7-8, 68-77 (1937).—Heat-treating expts. were carried out by keeping Mo wire in a tube furnace in an atm. of H_2 at a given temp. for 25 min. and then cooling either in the furnace or in air to 20°. Heating at 600-800° had no effect on internal structure and, therefore, on mech. properties, in the case of wire sizes down to 0.2 mm. diam. In the case of smaller sizes heating at 900° produced a sharp decrease in tensile strength. Temps. above 800° decreased tensile strength but increased the other mech. properties for all sizes of wire, until a max. was reached when the tempering temp. reaches 1100-1300°. When the wires were heated at 1500° the mech. properties remained unchanged. Forging samples at 1200-1300° resulted in finer but longer grain structure, higher d. and greater tensile strength.

S. L. Madorsky

ASM-SLA METALLURGICAL LITERATURE CLASSIFICATION

APPROVED FOR RELEASE: 09/19/2001 CIA-RDP86-00513R001963830007-4"

"APPROVED FOR RELEASE: 09/19/2001 CIA-RDP86-00513R001963830007-4

A5m

11-35. Improved Machine for Production of Polished Metallurgical Specimens. (In Russian) N. M. Zarubin and A. I. Fraiman. Zavodskaya Laboratoriya (Factory Laboratory), v. 13, Oct. 1947, p. 1257-1259.

Details of above machine.

ASM-SLA METALLURGICAL LITERATURE CLASSIFICATION

APPROVED FOR RELEASE: 09/19/2001 CIA-RDP86-00513R001963830007-4"

"APPROVED FOR RELEASE: 09/19/2001 CIA-RDP86-00513R001963830007-4

PROCESSES AND PROPERTIES INDEX

Ca

Use of passivating solutions in the preparation of micrographic sections. N. M. Zarubin and N. E. Klez. *Zavodskaya Lab.* 14, 204-7(1948).—The inevitable corrosion of microsections of ferrous metals, particularly gray cast iron, can be checked by using, in the operations, a soln. of $NaNO_2$ 10-150 g., Na_2CO_3 3 g., H_2O up to 1 L., instead of pure H_2O. Microphotographs are presented as illustrations. N. Thon

ASM-SLA METALLURGICAL LITERATURE CLASSIFICATION

APPROVED FOR RELEASE: 09/19/2001 CIA-RDP86-00513R001963830007-4"

"APPROVED FOR RELEASE: 09/19/2001 CIA-RDP86-00513R001963830007-4

19

S

METALLOGRAPHIC STUDY OF SOLID ALLOYS OF THE METAL-CERAMIC TYPE. N. M. Zarubin. (Zavodskaya Laboratoriya, 1948, vol. 14, Dec., pp. 1434-1436). (In Russian). An account is given of an investigation of the action of someselective etching agents on sintered alloys of the carbides of tungsten, molybdenum, and tantalum, respectively, with cobalt. Potassium ferricyanide solution was found to be a good agent for the identification of the carbides and to have no action on the solid solutions. Whilst the reagent for the latter was found to be aqua regia, a mixture of nitric and acetic acids revealed their structure in the greatest detail. For the study of the structure of solid solutions in tantalum-carbide/cobalt alloys containing $< 50\%$ of carbide the reagent recommedned is an ammoniacal solution of cuprous chloride. Results obtained are illustrated by photomicrographs. S. K.

ASM-SLA METALLURGICAL LITERATURE CLASSIFICATION

APPROVED FOR RELEASE: 09/19/2001 CIA-RDP86-00513R001963830007-4"

"APPROVED FOR RELEASE: 09/19/2001 CIA-RDP86-00513R001963830007-4

[illegible], N.M., inzhener.

Classifying structural components of castings made from grey and high-strength cast iron. Standartizatsiia no.4:53-56 Je-Ag '57. (MLRA 10:9)

1. TSentrallnyy nauchno-issledovatel'skiy institut mashinostroyeniya.
(Iron founding)

APPROVED FOR RELEASE: 09/19/2001 CIA-RDP86-00513R001963830007-4"

"APPROVED FOR RELEASE: 09/19/2001 CIA-RDP86-00513R001963830007-4

ZARUBIN, N.M.

Investigating the inhomogeneity of magnesium cast iron. Lit. proizv. no. 5:27-28 My '61. (MIRA 14:5)
(Cast iron—Metallography)
(Iron founding)

APPROVED FOR RELEASE: 09/19/2001 CIA-RDP86-00513R001963830007-4"

"APPROVED FOR RELEASE: 09/19/2001 CIA-RDP86-00513R001963830007-4

ZARUBIN, N.Ye., nauchnyy sotrudnik

Eliminating the settling of the roadbed. Put' i put.khoz. 4 no.10:15-16 O '60. (MIRA 13:9)

1. Vostochno-Sibirskiy geologicheskiy institut, g. Irkutsk.
(Railroad--Track)

APPROVED FOR RELEASE: 09/19/2001 CIA-RDP86-00513R001963830007-4"

"APPROVED FOR RELEASE: 09/19/2001 CIA-RDP86-00513R001963830007-4

ZARUBIN, N.Ye, inzh.

Culvert foundations to be built on waterways covered with ice. Transp.stroi. 9 no.12:44-45 D '59.
(MIRA 13:5)
(Culverts) (Ice on rivers, lakes, etc.)

APPROVED FOR RELEASE: 09/19/2001 CIA-RDP86-00513R001963830007-4"

"APPROVED FOR RELEASE: 09/19/2001 CIA-RDP86-00513R001963830007-4

ZARUBIN, N.Ye., inzh.

Expediency of some anti-icing measures and installations.
Transp.stroi. 10 no.2:45 F '60. (MIRA 13:5)
(Ice on rivers, lakes, etc.)
(Railroads--Maintenance and repair)

APPROVED FOR RELEASE: 09/19/2001 CIA-RDP86-00513R001963830007-4"

"APPROVED FOR RELEASE: 09/19/2001 CIA-RDP86-00513R001963830007-4

KALINNIKOV, V.M., starshiy tekhnik; ZARUBIN, N.Ye., inzh.

Instrument for measuring soil temperatures under field conditions. Transp.stroi. 9 no.1:58-59 Ja '59. (MIRA 12:2)
(Measuring instruments) (Soil temperature)

APPROVED FOR RELEASE: 09/19/2001 CIA-RDP86-00513R001963830007-4"

"APPROVED FOR RELEASE: 09/19/2001 CIA-RDP86-00513R001963830007-4

ZARUBIN, N.Ye., inzh.

Measures to combat foundation heaving. Transp.stroi. 9 no.3: 31-33 Mr '59. (MIRA 12:4)
(Foundations) (Soil mechanics)

APPROVED FOR RELEASE: 09/19/2001 CIA-RDP86-00513R001963830007-4"

"APPROVED FOR RELEASE: 09/19/2001 CIA-RDP86-00513R001963830007-4

ZARUBIN, N.Ye., insh.

Minimum height of embankments built on marshy soils. Transp. stroi. 8 no.12:22 D '58. (MIRA 12:1)
(Railroads--Earthwork)

APPROVED FOR RELEASE: 09/19/2001 CIA-RDP86-00513R001963830007-4"

"APPROVED FOR RELEASE: 09/19/2001 CIA-RDP86-00513R001963830007-4

ZAHUBIN, N.Ye., inzh.

On sections located in permanently frozen soil. Put' i put.khoz. no.10:30 O '58. (MIRA 11:12)

1. Nachal'nik merzlotnoy stantsii, g. Skovorodino Amurskoy dorogi.
(Railroads--Cold weather conditions)

APPROVED FOR RELEASE: 09/19/2001 CIA-RDP86-00513R001963830007-4"

"APPROVED FOR RELEASE: 09/19/2001 CIA-RDP86-00513R001963830007-4

ZARUBIN, N.Ye., inzh.; PERETRUKHIN, N.A., kand. tekhn. nauk.

Planning pile foundations for contact system poles in frozen ground regions. Transp. stroi. 7 no.11:4-7 N '57. (MIRA 11:2)
(Electric lines--Poles) (Frozen ground) (Electric railroads)

APPROVED FOR RELEASE: 09/19/2001 CIA-RDP86-00513R001963830007-4"

"APPROVED FOR RELEASE: 09/19/2001 CIA-RDP86-00513R001963830007-4

L 17904-63

ACCESSION NR: AP3003768

efficient of diffusion of the substance, and the rates of supply and removal which determine the rate of the process. Orig. art. has: 2 tab., 16 equa., 11 fig.

ASSOCIATION: none

SUBMITTED: 27Jul62 DATE ACQ: 07Aug63 ENCL: 00

SUB CODE: ML, MA NO REF SOV: 010 OTHER: 002

Card 2/2

APPROVED FOR RELEASE: 09/19/2001 CIA-RDP86-00513R001963830007-4"

"APPROVED FOR RELEASE: 09/19/2001 CIA-RDP86-00513R001963830007-4

L 21002-66 EWT(m)/EWP(t) IJP(c) JD/WB

ACCESSION NR: AP5014135 UR/0365/65/001/003/0297/0303

620.194

620.199

12

10

B

AUTHOR: Zarubin, P. I.; Poluboyartseva, L. A.; Novakovskiy, V. M.

TITLE: Investigation of metal corrosion in heat transfer conditions

14

SOURCE: Zashchita metallov, v. 1, no. 3, 1965, 297-303

TOPIC TAGS: corrosion, corrosion rate, thermodynamic equilibrium, heat transfer

ABSTRACT: It is shown that rotating disc electrodes may be used for simulating the diffusion-dependent corrosion processes which take place in a circular tube during the flow of an aggressive liquid both in conditions of thermal equilibrium and when the liquid is being heated or cooled through the wall. Experimental data indicate that if the wall temperature and the solution temperature are exactly reproduced in the model, then the velocity of the disc which is equivalent to the predetermined linear velocity of the liquid flow may be determined with satisfactory accuracy from Novakovskiy's equation for thermally balanced systems (V. M. Novakovskiy, S. N. Fishman, "Work in the Field of Electrochemistry and Corrosion", *Tr. Ural'sk. n.-i.*

Card 1/2

APPROVED FOR RELEASE: 09/19/2001 CIA-RDP86-00513R001963830007-4"

"APPROVED FOR RELEASE: 09/19/2001 CIA-RDP86-00513R001963830007-4

L 21002-66

ACCESSION NR: AP5014135

2

khim. in-ta, Goskhimizdat, 1961, p 71). The methods developed in this paper are used to show that there may be a considerable difference in the effect which the velocity of the liquid flow has on the rate of diffusion-dependent corrosion with respect to thermal equilibrium and heat transfer conditions. Orig. art. has: 4 figures, 5 formulas.

ASSOCIATION: Ural'skiy nauchno-issledovatel'skiy khimicheskiy institut (Ural Scientific Research Institute of Chemistry); Nauchno-issledovatel'skiy fiziko-khimicheskiy institut im. L. Ya. Karpova (Physicochemical Scientific Research Institute)

SUBMITTED: 02Feb65 ENCL: 00 SUB CODE: TD, MM

NO REF SOV: 010 OTHER: 004

Card 2/2 BK

APPROVED FOR RELEASE: 09/19/2001 CIA-RDP86-00513R001963830007-4"

"APPROVED FOR RELEASE: 09/19/2001 CIA-RDP86-00513R001963830007-4

ZARUBIN, P. P.

"Investigation of the Radiation of Several Radioactive Isotopes With the Aid of a Beta-Spectrometer With Improved Focusing." Cand Phys-Math Sci, Leningrad Order of Lenin State U imeni A. A. Zhdanov, Leningrad, 1954. (KL, No 7, Feb 55)

SO: Sum. No. 631, 26 Aug 55 - Survey of Scientific and Technical Dissertations Defended at USSR Higher Educational Institutions (14)

APPROVED FOR RELEASE: 09/19/2001 CIA-RDP86-00513R001963830007-4"

"APPROVED FOR RELEASE: 09/19/2001 CIA-RDP86-00513R001963830007-4

ZARUBIN, P.P.

USSR/ Nuclear Physics

Card 1/2 Pub. 43 - 2/5

Authors : Zarubin, P. P.

Title : Investigation of Zr^{95} Nb^{95} radiation

Periodical : Izv. AN SSSR. Ser. fiz. 18/5, 563 - 579, Sep - Oct 1954

Abstract : Experiments were conducted to determine the relation between gamma rays with energy of 910-930 kev and the decomposition of Zr^{95} or Nb^{95}, to check the presence of a partial beta-spectrum of Zr^{95} with boundary energy of 600 kev and to establish the nature of gamma-radiation with energies of 720-730 kev with respect to the excitation level of Nb^{95}. The experiments were carried out by means of a betron (beta-spectrometer) with lateral magnetic field and improved electron focusing as a result of magnetic field non-uniformity in one direction. The results obtained by measuring the spectra

Institution: .....

Submitted: August 26, 1954

APPROVED FOR RELEASE: 09/19/2001 CIA-RDP86-00513R001963830007-4"

"APPROVED FOR RELEASE: 09/19/2001 CIA-RDP86-00513R001963830007-4

Periodical: Izv. AN SSSR, Ser. fiz. 18/5, 563 - 579, Sep - Oct 1954

Card 2/2 Pub. 43 - 2/5

Abstract: of conversion electrons and gamma-rays of Zr^{95} and Nb^{95} are tabulated. Thirty-eight references: 6 USSR; 28 USA; 2 Swiss and 2 Dutch (1944-1954). Tables; diagrams; graphs.

APPROVED FOR RELEASE: 09/19/2001 CIA-RDP86-00513R001963830007-4"

"APPROVED FOR RELEASE: 09/19/2001 CIA-RDP86-00513R001963830007-4

ZARUBIN, P.P.

USSR/ Nuclear Physics

Card 1/1 Pub. 43 - 3/5

Authors : Dmitriev, A. G., and Zarubin, P. P.

Title : Study of Rb^{86} radiation

Periodical : Izv. An SSSR. Ser. fiz. 18/5, 580 - 588, Sep - Oct 1954

Abstract : The Rb^{86} radiation was investigated by means of a magnetic beta-spectrometer with improved focusing (ketron) in order to explain some of the uncertainties in the decomposition of Rb^{86}. The semi-decomposition period of the radioactive Rb^{86} - discovered by Snell in 1937 during the bombardment of Rb with slow neutrons - according to the most accurate measurements was set at 19.5± days. It was established that this isotope when subjected to beta-decomposition converts from its basic state into the basic state of Sr^{86} and into one highly excited state Sr^{86} with consequent discharge by gamma-quanta. It is also quite possible that Rb^{86} converts from its basic state into Kr^{86} through beta-decomposition and K-entrapment. Twenty-four references: 22 USA; 1 USSR and 1 Swiss (1937 - 1953). Table; diagrams; graph.

Institution: .....

Submitted: August 26, 1954

APPROVED FOR RELEASE: 09/19/2001 CIA-RDP86-00513R001963830007-4"

"APPROVED FOR RELEASE: 09/19/2001 CIA-RDP86-00513R001963830007-4

24064
S/054/61/000/002/002/005
B101/B217

A new β-spectrometer ...

spectrometer was based on the paper by P. P. Pavinskiy (Ref.4: Izv. AN SSSR, seriya fiz., 18, 175, 1954) in which the field is written down in a parametric form: $H = H(\tau)$; $\rho = \rho(\tau)$, where τ is the parameter. The calculations were repeated and for the coefficient A_k, equations were obtained which differ from those presented in Ref.4. Teh drawing of Fig.1 is taken as basis. S is the radiation source with the polar coordinates r_0,0. The particle leaves the source at an angle α relative to the tangent. Its trajectory is determined by the function H(r). Under certain conditions, it will intersect the circle of radius r_0. For the coordinate φ_F of this point, the following is written down:

$$\varphi_F = \pm 2 \int_0^{\mu} \frac{\left(1 - \frac{\mu - \tau}{\rho(\tau)}\right) \frac{1}{\rho(\tau)} \frac{d\rho(\tau)}{d\tau} d\tau}{\sqrt{1 - \left(1 - \frac{\mu - \tau}{\rho(\tau)}\right)^2}}. \quad (3)$$

where $\mu = 1 - \cos\alpha$ (4). For the function $\rho(\tau)$, the following solution is

Card 2/9

APPROVED FOR RELEASE: 09/19/2001 CIA-RDP86-00513R001963830007-4"

"APPROVED FOR RELEASE: 09/19/2001 CIA-RDP86-00513R001963830007-4

obtained: $\tau = -\xi - (1/r_0)B(\xi)+1$ (5). For the function $B(\cdot)$, the following holds: $B(\ ) = (er_0^2/mcv_0)\int_1^{\xi}\xi H(\xi)d\xi$ (6). φ_F = const is written down and the solution for Eq. (3) sought. For $\rho(\tau)$, the following series is written down:

$$\rho(\tau) = 1 + \theta\sum_{p=0}^{\infty}\lambda_p\tau^{\frac{p+1}{2}}, \qquad (10),$$

where θ is a parameter to be determined. For φ_F, one finds:

$\varphi_F = \pm(\sqrt{2}/\pi)(\sum_{k=0}^{\infty} R_k\theta^k + \sum_{k=0} E_k\theta^{k+1/2})$ (15), where $R_k = \sum_{i=0}^{k}[a_i/(1-2i)]$ $L^{(i)}_{2(k-i)+1}\cdot B(k-i+1/2,\ i+1/2)$ (16), and $E_k = \sum_{i=0}^{k}[a_i/(1-2i)]L^{(i)}_{2(k-i)+2}\cdot$ $\cdot B(k-i+1,\ i+1/2)$ (17). The condition of focusing is fulfilled if all

APPROVED FOR RELEASE: 09/19/2001 CIA-RDP86-00513R001963830007-4"

"APPROVED FOR RELEASE: 09/19/2001 CIA-RDP86-00513R001963830007-4

coefficients of R_k and E_k, with the exception of R_0, become equal to zero: $\varphi_F = \pm(\sqrt{2}/\pi)R_0$, and $\theta = \pm(\sqrt{2}/\pi)\varphi_F$ (18). By successively setting the coefficients of R_k and E_k equal to zero, the equations for λ_k are obtained ($k = 1, 2, \ldots$):

$$\left.\begin{aligned} &\lambda_1=\frac{0}{4};\ \lambda_2=\frac{1}{4};\ \lambda_3=\frac{0}{32};\ \lambda_4=\frac{11}{160}-\frac{3}{320}\theta^2;\\ &\lambda_5=-\frac{1}{80}\theta+\frac{1}{320}\theta^3;\ \lambda_6=\frac{83}{4480}+\frac{3}{1280}\theta^2-\frac{1}{896}\theta^4,\\ &\lambda_7=-\frac{687}{71680}\theta+\frac{3}{20480}\theta^3+\frac{3}{7168}\theta^5;\ldots \end{aligned}\right\} \quad (19)$$

For $H(\tau)$ the following is obtained from Eqs. (5) and (6):

$$H(\tau)=-H_0\frac{1}{\rho(\tau)}\left(1+1\Big/\frac{d\rho(\tau)}{d\tau}\right). \quad (20).$$

By means of Eqs. (10) and (20), the values of the function $H = H(\ )$ for

APPROVED FOR RELEASE: 09/19/2001 CIA-RDP86-00513R001963830007-4"

"APPROVED FOR RELEASE: 09/19/2001 CIA-RDP86-00513R001963830007-4

24064
S/054/61/000/002/002/005
B101/B217

A new β-spectrometer ...

$\eta_F = 120^0$ were calculated. At present, a spectrometer is under construction for the study of the β- and -radiation of short-lived isotopes; it was designed on the basis of data listed in the Table. The chamber of the spectrometer is schematically shown in Fig.3. The trajectories shown in Fig.3 were calculated according to V. R. Saulit (Ref.3: Izv. AN SSSR, seriya fiz., 18, 227, 1954). It is pointed out that the spectrometer may also be used as a γ-spectrometer and permits correlation experiments. There are 3 figures, 1 table, and 7 references: 4 Soviet-bloc and 3 non-Soviet-bloc. The reference to English-language publication reads as follows: F. M. Beiduk, E. J. Konopinski, Phys. Rev., 73, 1229, 1948

Card 5/9

APPROVED FOR RELEASE: 09/19/2001 CIA-RDP86-00513R001963830007-4"

"APPROVED FOR RELEASE: 09/19/2001 CIA-RDP86-00513R001963830007-4

24064
S/054/61/000/002/002/005
B101/B217

A new β-spectrometer ...

Fig.1. Geometrical representation of the denotations used in the text.

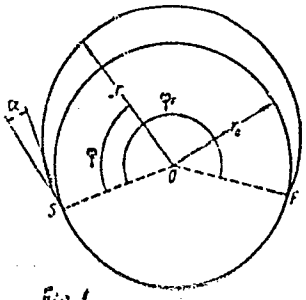

Fig 1

Card 6/9

APPROVED FOR RELEASE: 09/19/2001 CIA-RDP86-00513R001963830007-4"

"APPROVED FOR RELEASE: 09/19/2001 CIA-RDP86-00513R001963830007-4

24064
S/054/61/000/002/002/005
B101/B217

A new β-spectrometer ...

Table. Numerical values of the function H = f(ρ).

Численные значения зависимости $H = f(\rho)$

ρ	H	ρ	H
0,601 669 04	0,009 919 04	1,096 742 17	1,095 164 7
0,611 721 62	0,026 986 78	1,138 458 75	1,121 897 4
0,622 012 04	0,064 346 31	1,171 224 47	1,137 699 3
0,632 563 74	0,102 173 52	1,199 398 41	1,147 984 1
0,643 403 63	0,140 521 51	1,224 667 44	1,154 833 8
0,654 562 93	0,179 419 88	1,247 886 78	1,159 308 8
0,665 983 93	0,218 943 24	1,269 573 14	1,162 034 4
0,677 992 69	0,259 049 48	1,290 056 61	1,169 344 1
0,690 358 19	0,299 892 49	1,309 567 63	1,163 741 0
0,703 237 58	0,337 632 16	1,328 272 53	1,163 198 9
0,716 708 59	0,384 012 32	1,346 298 15	1,163 062 9
0,730 869 31	0,427 497 69	1,363 714 91	1,160 095 0
0,745 845 00	0,472 123 94	1,380 681 35	1,157 741 3
0,761 803 89	0,518 086 94	1,397 179 24	1,154 957 0
0,778 975 96	0,565 682 19	1,413 287 17	1,151 802 3
0,797 691 40	0,615 293 83	1,429 048 27	1,148 326 7
0,818 467 11	0,667 566 48	1,444 498 87	1,144 572 1
0,842 158 42	0,723 546 80	1,459 670 10	1,140 572 1
0,870 452 25	0,785 322 79	1,474 588 64	1,136 360 9
0,907 707 81	0,858 306 81	1,489 277 80	1,131 961 6

Card 7/9

APPROVED FOR RELEASE: 09/19/2001 CIA-RDP86-00513R001963830007-4"

"APPROVED FOR RELEASE: 09/19/2001 CIA-RDP86-00513R001963830007-4

24064
S/054/61/000/002/002/005
B101/B217

A new β-spectrometer ...

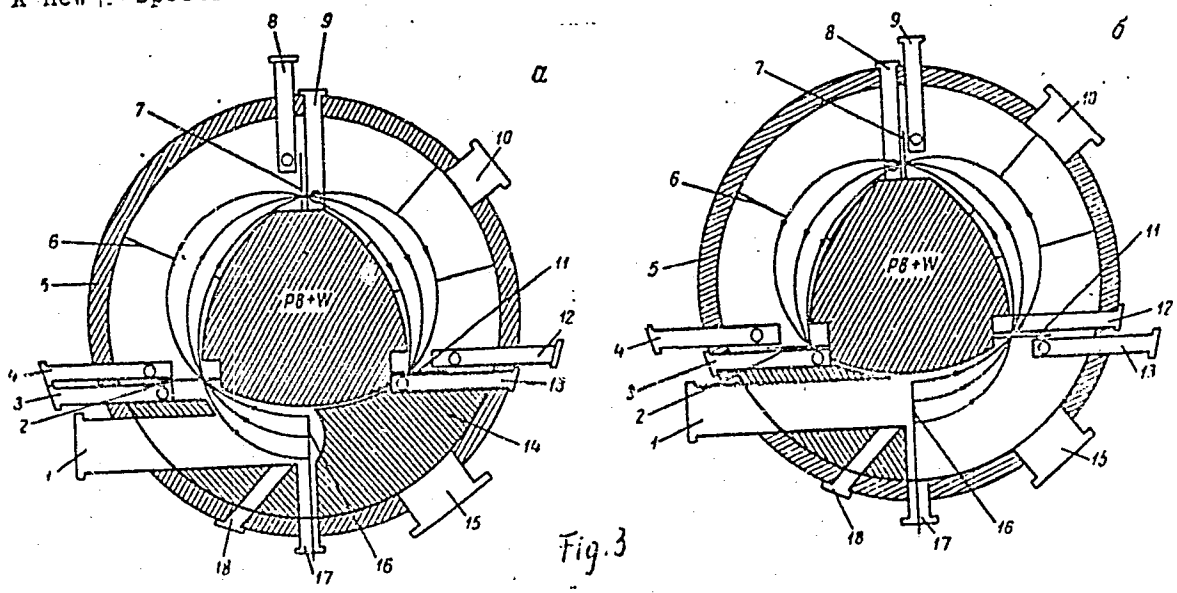

Fig. 3

Card 8/9

APPROVED FOR RELEASE: 09/19/2001 CIA-RDP86-00513R001963830007-4"

"APPROVED FOR RELEASE: 09/19/2001 CIA-RDP86-00513R001963830007-4

24064

A new β-spectrometer ... S/054/61/000/002/002/005
B101/B217

Fig.3. Schematic representation of the spectrometer chamber. Legend: a) when used as β-spectrometer; б) when used as γ-spectrometer; 1) window to let in particle or quantum beams striking the target; 2), 7), 11) detector slits; 3), 4), 8), 9), 12), 13) chambers with counters; 5) body of the chamber; 6) stop; 10) opening for evacuation; 14) removable part of the Pb+W protective block; 15) opening to introduce the Pb+W block and the stabilizer of the magnetic field; 16) target; 17) opening to introduce the target; 18) opening to check the intensity of the incident beam.

Card 9/9

APPROVED FOR RELEASE: 09/19/2001 CIA-RDP86-00513R001963830007-4"