"APPROVED FOR RELEASE: 07/19/2001 CIA-RDP86-00513R002064830001-7

L 05782-67

ACC NR: AT6022688

Orig. art. has: 13 formulas.

SUB CODE: 09,12/ SUBM DATE: 02Mar66/ ORIG REF: 003/ OTH REF: 003

Card 2/2

APPROVED FOR RELEASE: 07/19/2001 CIA-RDP86-00513R002064830001-7"

"APPROVED FOR RELEASE: 07/19/2001 CIA-RDP86-00513R002064830001-7

ACCESSION NR: AP4015305 S/0280/64/000/001/0175/0181

AUTHOR: Zhivoglyadov, V. P. (Moscow); Maslov, Ye. P. (Moscow)

TITLE: Problem of evaluating essential parameters of a plant

SOURCE: AN SSSR. Izvestiya. Tekhnicheskaya kibernetika, no. 1, 1964, 175-181

TOPIC TAGS: automatic control, controlled plant, controlled plant parameters, controlled plant essential parameters, automatic control theory

ABSTRACT: The theory of statistical decisions is used to evaluate the essential parameters of a controlled plant with incomplete information about the input signals and the state of the plant. Input u and output x signals of the plant O (Enclosure 1), via channels G and H with noise g and h, are applied to a computer BY. The plant is inertial and is characterized by a vector of essential parameters $\vec{\gamma}$; other unknown parameters are denoted by $\vec{\lambda}$. An algorithm of the computer $\Gamma_s = \delta_s[\vec{\gamma}_s - \vec{\gamma}_s(\vec{u}_s, \vec{y}_s)]$. is found in which the evaluation $\vec{\gamma}_s$ of the

Card 1/3

APPROVED FOR RELEASE: 07/19/2001 CIA-RDP86-00513R002064830001-7"

"APPROVED FOR RELEASE: 07/19/2001 CIA-RDP86-00513R002064830001-7

ACCESSION NR: AP4015305

essential-parameter vector corresponds to an optimality criterion; the latter is represented by a mathematical expectation of a loss function $W_s(s, \bar{\mu}, \bar{\gamma}_s)$. Here, u_s and y_s are input and output signals at the moment s, respectively. "In conclusion, the authors wish to thank A. A. Fel'dbaum for his attention and valuable advice." Orig. art. has: 4 figures and 42 formulas.

ASSOCIATION: none

SUBMITTED: 22May63 DATE ACQ: 12Mar64 ENCL: 01

SUB CODE: CG, IE NO REF SOV: 005 OTHER: 000

Card 2/3

APPROVED FOR RELEASE: 07/19/2001 CIA-RDP86-00513R002064830001-7"

"APPROVED FOR RELEASE: 07/19/2001 CIA-RDP86-00513R002064830001-7

ACCESSION NR: AP4015305

ENCLOSURE: 01

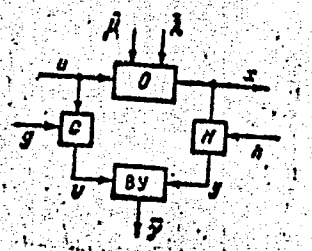

Evaluation of essential parameters of an automatically-controlled plant

Card 3/3

APPROVED FOR RELEASE: 07/19/2001 CIA-RDP86-00513R002064830001-7"

"APPROVED FOR RELEASE: 07/19/2001 CIA-RDP86-00513R002064830001-7

ACCESSION NR: AP4011319 S/0103/64/025/001/0054/0066

AUTHOR: Zhivoglyadov, V. P. (Moscow)

TITLE: Optimized dual-mode control for transport-lag plants

SOURCE: Avtomatika i telemekhanika, v. 25, no. 1, 1964, 54-66

TOPIC TAGS: dual mode control system, automatic control system, transport lag plant, dual mode control synthesis, optimized dual mode control

ABSTRACT: A synthesis of an optimized control system for a transport-lag plant is mathematically performed which is based on the theory of dual-mode control systems. An algorithm has been developed for the optimum control of a transport-lag-type plant with a random disturbance at the plant input and a random additive noise in the feedback circuit. Two cases of plant disturbance are considered: (a) a random quantity and (b) a stationary random process with a correlation function $\rho(\theta) = e^{-a_1|\theta|}$, where e is the natural-logarithm base, $0 < a_1 < \infty$. The normal law of distribution of noise and disturbance has been assumed. The optimized control system is synthesized for both above cases,

Card 1/2

APPROVED FOR RELEASE: 07/19/2001 CIA-RDP86-00513R002064830001-7"

"APPROVED FOR RELEASE: 07/19/2001 CIA-RDP86-00513R002064830001-7

ACCESSION NR: AP4011319

and the results are extended over the continuous system. It is proven that the structure of the control device is essentially the same for both above cases; only the settings are different. The control device includes a plant model and a computing device that acts as a statistical averager and predictor. It is also pointed out that Smith's linear-predictor control system and Reswick's time-lag controller are particular cases of the above optimized controller when there is no noise in the feedback circuit. A formula is offered for estimating output dispersion dependent on the transport lag. Orig. art. has: 5 figures and 56 formulas.

ASSOCIATION: none

SUBMITTED: 31Jan63 DATE ACQ: 14Feb64 ENCL: 00

SUB CODE: CG, IE NO REF SOV: 008 OTHER: 000

Card 2/2

APPROVED FOR RELEASE: 07/19/2001 CIA-RDP86-00513R002064830001-7"

"APPROVED FOR RELEASE: 07/19/2001 CIA-RDP86-00513R002064830001-7

APPROVED FOR RELEASE: 07/19/2001 CIA-RDP86-00513R002064830001-7"

"APPROVED FOR RELEASE: 07/19/2001 CIA-RDP86-00513R002064830001-7

APPROVED FOR RELEASE: 07/19/2001 CIA-RDP86-00513R002064830001-7"

"APPROVED FOR RELEASE: 07/19/2001 CIA-RDP86-00513R002064830001-7

APPROVED FOR RELEASE: 07/19/2001 CIA-RDP86-00513R002064830001-7"

"APPROVED FOR RELEASE: 07/19/2001 CIA-RDP86-00513R002064830001-7

accessible (for measurement) only at certain time moments separated by

APPROVED FOR RELEASE: 07/19/2001 CIA-RDP86-00513R002064830001-7"

"APPROVED FOR RELEASE: 07/19/2001 CIA-RDP86-00513R002064830001-7

APPROVED FOR RELEASE: 07/19/2001 CIA-RDP86-00513R002064830001-7"

"APPROVED FOR RELEASE: 07/19/2001 CIA-RDP86-00513R002064830001-7

ZHIVOGLYADOV, V.P. (Frunze)

Dual control in absence of a priori information on the unknown parameters of a plant. Avtom. i telem. 26 no.5:809-815 My '65. (MIRA 18:12)

1. Submitted May 30, 1964

APPROVED FOR RELEASE: 07/19/2001 CIA-RDP86-00513R002064830001-7"

"APPROVED FOR RELEASE: 07/19/2001 CIA-RDP86-00513R002064830001-7

L 04893-67 EWP(k)/EWT(d)/EWP(h)/EWP(1)/EWP(v) GD

ACC NR: AT6022687 SOURCE CODE: UR/0000/66/000/000/0183/0194

AUTHOR: Zhivoglyadov, V. P.; Maslov, Ye. P.

ORG: none

31
30
B+1

TITLE: On the synthesis of near-optimum dual-control systems

SOURCE: Moscow. Institut avtomatiki i telemekhaniki. Samoobuchayushchiyesya avtomaticheskiye sistemy (Self-instructing automatic systems). Moscow, Izd-vo Nauka, 1966, 183-194

TOPIC TAGS: optimal automatic control, automatic control theory, approximation method

ABSTRACT: The article deals with specific computational problems frequently encountered in the synthesis of practical dual-control systems. Several approximating methods are proposed for the synthesis of such systems having active information accumulation. A discrete-continuous system with quantizing in time is analyzed (level quantizing is omitted). The operator of the object, the loss function, as well as the probability densities of all random quantities are considered to be known, with all interference and random parameters regarded as statistically independent. Both communication channels are assumed to be subject to noise and to have no retentivity, with the driving effect reaching the control element over a communication channel free of interference. Five different approximation methods are described, along with several

Card 1/2

APPROVED FOR RELEASE: 07/19/2001 CIA-RDP86-00513R002064830001-7"

"APPROVED FOR RELEASE: 07/19/2001 CIA-RDP86-00513R002064830001-7

L 04893-67

ACC NR: AT6022687

examples of their application, and in a discussion of optimal and suboptimal control algorithms a concrete example is used to compare a control law determined by means of an approximation method with an accurate computer-derived law. The methods proposed provide a realistic approach to the problem of analytically synthesizing dual-control systems in a wide variety of practically important cases, although the examples given are basically of an illustrative nature. A comparative analysis of the suitability of the methods for inertial and noninertial objects is presented. The author expresses his gratitude to A. A. Fel'dbaum for his discussion of the results of the work. Orig. art. has: 4 figures and 53 formulas.

SUB CODE: 09,12/ SUBM DATE: 02Mar66/ ORIG REF: 006/ OTH REF: 002

Card 2/2

APPROVED FOR RELEASE: 07/19/2001 CIA-RDP86-00513R002064830001-7"

"APPROVED FOR RELEASE: 07/19/2001 CIA-RDP86-00513R002064830001-7

ACC NR: AT7004923 (N) SOURCE CODE: UR/0000/66/000/000/0024/0027

AUTHOR: Zhivoglyadov, V. P. (Frunze)

ORG: none

TITLE: Synthesizing stored-information automatic systems

SOURCE: Vses. konf. po avtomatich. kontrol i metodam elektrich. izmereniy, 6th, 1964. Avtomatich. kontrol' i metody elektrich. izmereniy; tr. konf., t. I: Teoriya izmerit. info. sistem (Automatic control and electrical measuring techniques; transactions of the conference, v. 1: Theory of measuring information systems). Novosibirsk, Izd-vo Nauka, 1966, 24-27

TOPIC TAGS: automatic control system, automatic control theory, information storage and retrieval

ABSTRACT: A minimum-operating-time suboptimal automatic control system with stored information is considered. Plant P (see figure) with constant parameters is describable by this equation: $\frac{dX}{dt} = f(X, u, g)$, where $X = (x, x^1, \ldots, x^{n-1})$ is the n-dimensional vector of phase coordinates; u - (scalar) modulus-constrained controlling variable $|u| \leq N$ = const;

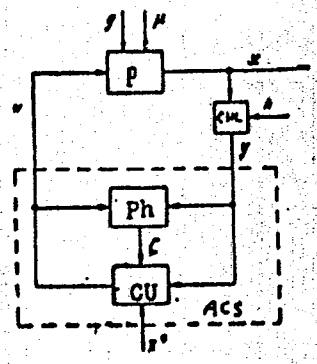

Card 1/2

APPROVED FOR RELEASE: 07/19/2001 CIA-RDP86-00513R002064830001-7"

"APPROVED FOR RELEASE: 07/19/2001 CIA-RDP86-00513R002064830001-7

ACC NR: AT7004923

g - random noise with known statistical characteristics; f - vector function linear with respect to u; CHL - inertialess communication channel. An automatic control system algorithm is sought such that the mathematical expectation of the time of motion of the state point from its initial position $X(0) = \mu$ to the vicinity of X^* (origin of coordinates) is minimized; here, μ is the vector of random initial conditions. The automatic control system (ACS) comprises two units: a control unit (CU) and a phase-coordinate measuring instrument (Ph). The CU design assumes availability of complete information about the state of the plant (active information storage). The equation of switching surface is similar to that in a no-noise ACS; instead of phase coordinates, their statistical estimates obtained from Ph are used. Thus, the problem is reduced to synthesizing Ph. An automatic control system designed along these lines for a second-order plant was simulated on an analog computer. The results show that the new system is highly efficient under noise conditions, its operating time is close to that of a no-noise optimal system and is shorter than that of a no-information-storage system. The above method was also used in synthesizing variable-structure systems with incomplete information about the plant. Orig. art. has: 3 figures and 3 formulas.

SUB CODE: 09, 12 / SUBM DATE: none / ORIG REF: 005

Card 2/2

APPROVED FOR RELEASE: 07/19/2001 CIA-RDP86-00513R002064830001-7"

"APPROVED FOR RELEASE: 07/19/2001 CIA-RDP86-00513R002064830001-7

APPROVED FOR RELEASE: 07/19/2001 CIA-RDP86-00513R002064830001-7"

"APPROVED FOR RELEASE: 07/19/2001 CIA-RDP86-00513R002064830001-7

YUGOSLAVIA/General Biology. General Hydrobiology. B-6

Abs Jour : Ref Zhur-Biol., No 16, 1958, 71677

Author : Milovanovich, D., Zhivokovich, A.
Inst : Serbian AS.
Title : Study of the Production of Plankton in Fish Reservoirs of Echke (Study of Limnology of the Stagnant Waters of Panonsk Lowland).

Orig Pub : Zb. radova, Srpska AN, 1953, 29, No 3, 198-264

Abstract : Described are the physical and chemical conditions, position, dimensions, and thermic conditions of the investigated reservoirs; information on the chemical composition of the water is presented. On the basis of the typology of the Vundera-Veyman reservoirs and the quantitative analysis of the plankton, and numerical

Card : 1/2

APPROVED FOR RELEASE: 07/19/2001 CIA-RDP86-00513R002064830001-7"

"APPROVED FOR RELEASE: 07/19/2001 CIA-RDP86-00513R002064830001-7

ZHIVOLENKO, V.P.

SERIKOV, P.N., ZHIVOLENKO, V.P.

Freezing of soil in the Botanical Garden of the Academy of Sciences of the Ukrainian S.S.R. Trudy Bot.sada AN URSR 3:158-165 '55. (MLRA 10:8)

(Kiev--Frozen ground)

APPROVED FOR RELEASE: 07/19/2001 CIA-RDP86-00513R002064830001-7"

"APPROVED FOR RELEASE: 07/19/2001 CIA-RDP86-00513R002064830001-7

AGALETSKAYA, A.M., dotsent; ZHIVOLUP, R.F.

Use of reserpine in tachycardia in patients with myocardial infarcts. Sov. med. 28 no.6:97-100 Je '65. (MIRA 18:8)

1. Kafedra propedevtiki vnutrennikh bolezney Khar'kovskogo meditsinskogo instituta i Khar'kovskaya gorodskaya bol'nitsa Nr.11.

APPROVED FOR RELEASE: 07/19/2001 CIA-RDP86-00513R002064830001-7"

"APPROVED FOR RELEASE: 07/19/2001 CIA-RDP86-00513R002064830001-7

IGONON, P.G., inzh.; SVITKIN, V.V., inzh.; MITROFANOV, M.G., kand.tekhn.nauk; SLEPTSOV, Yu.S., inzh.; KOLOZHVARI, A.A., inzh.; PASHENKO, M.A., inzh.; ZHIVOLUPOV, M.A., inzh.; Prinimali uchastiye: MUSHENKO, D.V.; TSYSKOVSKIY, V.K.; SHCHEGLOVA, TS.N.; FREYDIN, B.G.; PYL'NIKOV, V.I.; LEVINA, M.I.; LEVIN, A.I.; LUR'YE, Ye.I.; BAYKINA, T.A.; UDOVENKO, S.A; MARCHENKO, T.A.

Effect of the method of liquid paraffin oxidizing on the yield and quality of the obtained fatty acids. Masl.-zhir.prom. 28 no.11:20-23 N '62. (MIRA 15:12)

1. Groznenskiy nauchno-issledovatel'skiy neftyanoy institut (for Igonin, Svitkin, Mirtofanov, Sleptsov, Kolozhvari, Pashenko, Zhivolupov). 2. Vsesoyuznyy nauchno-issledovatel'skiy institut neftekhimicheskikh protsessov (for Mushenko, TSyskovskiy, Shcheglova, Freydin, Pyl'nikov, Levina, Levin). 3. Lengiprogaz (for Lur'ye, Baykina). 4. VNIISINZh (for Udovenko, Marchenko).

(Paraffins) (Acids, Fatty)

APPROVED FOR RELEASE: 07/19/2001 CIA-RDP86-00513R002064830001-7"

"APPROVED FOR RELEASE: 07/19/2001 CIA-RDP86-00513R002064830001-7

IGONIN, P.G.; SVITKIN, V.V.; MITROFANOV, M.G.; SLEPTSOV, Yu.S.; KOLOZHVARI, A.A.; PASHENKO, M.A.; ZHIVOLUPOV, M.A.

Continuous and periodic oxidation of liquid paraffins to produce synthetic fatty acids. Trudy GrozNII no. 15:303-322 '63. (MIRA 17:5)

APPROVED FOR RELEASE: 07/19/2001 CIA-RDP86-00513R002064830001-7"

"APPROVED FOR RELEASE: 07/19/2001 CIA-RDP86-00513R002064830001-7

ZHIVOLYAPINA, R.R.

TIMOFEYEVA, L.A.; ZHIVOLYAPINA, R.R.; YAKUBOVSKAYA, G.V.

Associations of plague bacilli and representatives of the Salmonella group. Izv. Irk.gos. protivochum. inst. 12:11-22 '54. (MIRA 10:12)
(PASTEURELLA PESTIS)
(SALMONELLA)

APPROVED FOR RELEASE: 07/19/2001 CIA-RDP86-00513R002064830001-7"

"APPROVED FOR RELEASE: 07/19/2001 CIA-RDP86-00513R002064830001-7

ZHIVOLYAPIMA, R.R.

TIMOFEYEVA, L.A.; ZHOVTYY, I.F.; NEKIPELOV, N.V.; BUSOYEDOVA, N.M.; GOLOVACHEVA, V.Ya.; DUBOVIK, I.M.; DUBOVIK, V.I.; ZHIVOLYAPIMA, R.R.; LENT'YEV, A.N.; PETUKHOVA, O.S.; TIMOFEYEVA, A.A.; SHVED'KO, L.P.

Results of examining rodents in Transbaikalian steppes for pathogenic microflora. Tez.i dokl.konf.Irk.gos.nauch.-issl.protivochum.inst. no.1:38-39 '55. (MIRA 11:3)
(TRANSBAIKALIA--RODENTIA) (MICROORGANISMS, PATHOGENIC)

APPROVED FOR RELEASE: 07/19/2001 CIA-RDP86-00513R002064830001-7"

"APPROVED FOR RELEASE: 07/19/2001 CIA-RDP86-00513R002064830001-7

ZHIVOLYAPINA, R.R.; MIKHAYLOVA, R.S.

Two cases of plague with intestinal involvement. Tez. i dokl.konf. Irk.gos.nauchn.-issl.protivochum.inst. no.2:14-15 '57. (MIRA 11:3)
(PLAGUE) (INTESTINES--DISEASES)

APPROVED FOR RELEASE: 07/19/2001 CIA-RDP86-00513R002064830001-7"

"APPROVED FOR RELEASE: 07/19/2001 CIA-RDP86-00513R002064830001-7

USSR/Microbiology - Microbes Pathogenic for Man and Animals. F
Bacteria. Bacteria of the Intestinal Group.

Abs Jour : Ref Zhur Biol., No 22, 1958, 99407

Author : Timofeyeva, L.A., Zhivolyapina, R.R.

Inst : Irkutsk Scientific Research Antiplague Institute of Siberia and the Far East

Title : A Case of Isolation of D. paratyphi B from a Tarbagan [Marmot sibirica]

Orig Pub : Izv. Irkutskogo n.-i. protimochumn. in-ta Sibiri i Dal'n. Vost. 1957, 14, 26-27

Abstract : A case of isolation of a typical culture of paratyphoid B from the organs of tarbagan is described as to cultural, biochemical and serological characteristics.

Card 1/1

APPROVED FOR RELEASE: 07/19/2001 CIA-RDP86-00513R002064830001-7"

"APPROVED FOR RELEASE: 07/19/2001 CIA-RDP86-00513R002064830001-7

ZHIVOPISTSEV, A.

For progressive technology. Prom.koop.no.8:48-50 Ag '55.
(MLRA 9:1)

1.Nachal'nik upravleniya metalloobrabatyvayushchey promyshlennosti TSentropromsoveta.
(Metals--Finishing)

APPROVED FOR RELEASE: 07/19/2001 CIA-RDP86-00513R002064830001-7"

"APPROVED FOR RELEASE: 07/19/2001 CIA-RDP86-00513R002064830001-7

ZHIVOPISTSEV, F. A., KAMINSKIY, A. K., PERELOMOV, A. M. and CHIROKOV, Y. M.

"Sur le Calcul des Niveaux d'energie des noyaux legers."

report presented at the Intl. Congress for Nuclear Interactions (Low Energy) and Nuclear Structure (Intl. Union Pure and Applied Physics), Paris, 7-12 July 1958.

APPROVED FOR RELEASE: 07/19/2001 CIA-RDP86-00513R002064830001-7"

"APPROVED FOR RELEASE: 07/19/2001 CIA-RDP86-00513R002064830001-7

24(5)

AUTHORS: Zhivopistsev, F. A., Perelomov, A. M., Shirokov, Yu. M.

SOV/56-36-2-19/63

TITLE: On Relativistic Corrections to the Phenomenological Theory of the Levels of Light Nuclei (O relyativistskikh popravkakh v fenomenologicheskoy teorii urovney legkikh yader)

PERIODICAL: Zhurnal eksperimental'noy i teoreticheskoy fiziki, 1959, Vol 36, Nr 2, pp 478-480 (USSR)

ABSTRACT: Blatt and Weisskopf (Veyskopf)(Ref 1) estimated the contribution made by consideration of relativistic effects to the theory of the levels of light nuclei as amounting to 10-20%. At its present stage, the meson theory offers no possibility of satisfactorily solving this problem. A phenomenological treatment of the problem must therefore be attempted by basing on the general group properties of the relativistic invariance of the quantum theory (Ref 2). The authors of the present paper proceed from the nonrelativistic Hamiltonian

$H = \sum_n T_n + \sum_{m>n} H_{mn}$ ($T_n = p_n/"M$, the kinetic energy of the n-th nucleon). H_{mn} describes interaction between the nucleons m and n. According to reference 2 consideration of

Card 1/3

APPROVED FOR RELEASE: 07/19/2001 CIA-RDP86-00513R002064830001-7"

"APPROVED FOR RELEASE: 07/19/2001 CIA-RDP86-00513R002064830001-7

On Relativistic Corrections to the Phenomenological Theory of the Levels of Light Nuclei

SOV/56-36-2-19/63

relativistic effects (with an accuracy extending to terms of 2nd order of v/c) leads to the form $H = \sum_n T_n + \sum_{m>n} H_{mn} + \sum_n T'_n + \sum_{m>n} H'_{mn}$ ($T'_n = - p_n/8M^3$, the correction to the kinetic energy of the n-th nucleon). Further, the correction term to the interaction Hamiltonian H'_{mn} is investigated. This interaction correction formula is written down for 2 particles in the states

$|0s^2_{1/2}\ 01\rangle$, $|0s^2_{1/2}\ 10\rangle$, $|1p^2_{3/2}\ 01\rangle$, $|1p^2_{1/2}\ 01\rangle$

with $r_o = 1.65 \cdot 10^{-13}$ cm ($h\omega = 15$ Mev), the potential is written down in the form $V = V_o(0.317 + 0.500\ P + 0.183\ PQ)\ f(r/a)$

and for the Gaussian potential course (Ref 3)

$V_o = -51.9$ Mev, $a = 1.73 \cdot 10^{-13}$ cm, $f(x) = e^{-x^2}$.

Yukawa potential (Ref 1)

$V_o = -68$ Mev, $a = 1.17 \cdot 10^{-13}$ cm, $f(x) = e^{-x}/x$

Card 2/3

APPROVED FOR RELEASE: 07/19/2001 CIA-RDP86-00513R002064830001-7"

"APPROVED FOR RELEASE: 07/19/2001 CIA-RDP86-00513R002064830001-7

SOV/56-36-2-19/63

On Relativistic Corrections to the Phenomenological Theory of the Levels of Light Nuclei

and for the square potential well (Ref 1) $V_0 = -33.6$ Mev, $A = 2.1.10^{-13}$ cm . V(in kev) is calculated and compiled in a table. The correction was found to depend to a high degree on the shape of the potential and is of the order of magnitude 0.02 - 0.2 Mev for a pair of nucleons, 0.2-2 Mev for light nuclei, and 2-20 Mev for heavy nuclei. For nuclear levels it is of the same order as for nucleon pairs. There are 1 table and 3 references, 2 of which are Soviet.

ASSOCIATION: Institut yadernoy fiziki Moskovskogo gosudarstvennogo universiteta (Institute for Nuclear Physics of Moscow State University)

SUBMITTED: June 16, 1958

Card 3/3

APPROVED FOR RELEASE: 07/19/2001 CIA-RDP86-00513R002064830001-7"

"APPROVED FOR RELEASE: 07/19/2001 CIA-RDP86-00513R002064830001-7

ACCESSION NR: AP4014442 S/0188/64/000/001/0029/0036

AUTHOR: Zhivopistsev, F. A.

TITLE: Application of the Green quantum functions method to scattering theory

SOURCE: Moscow. Universitet. Vestnik. Seriya 3. Fiz. astron., no. 1, 1964, 29-36

TOPIC TAGS: nuclear physics. Born approximation, quantum function, Green function, Green quantum function, neutron scattering theory, nuclear reaction, target nucleus

ABSTRACT: A relationship has been established between the matrix elements of a $T_{\beta\alpha}$-matrix and the corresponding matrix elements of the generalized top part for nuclear reactions at low energies of the type:

$$A+\alpha\to B+\beta,$$

$$(A,a)+b\to(B,c)+d.$$

It is demonstrated that for the simplest nuclear reactions the determination of an S-matrix involves the finding of single- and two-particle Green functions. By using the developed system of Green quantum functions it is possible to carry out a quantitative program of computation of the simplest nuclear reactions in an approximation which is considerably more complete and precise than the ordinary Born approximation. This method is particularly effective when considering nuclear

Card 1/2

APPROVED FOR RELEASE: 07/19/2001 CIA-RDP86-00513R002064830001-7"

"APPROVED FOR RELEASE: 07/19/2001 CIA-RDP86-00513R002064830001-7

ACCESSION NR: AP4014442

reactions in which the Born approximation is inapplicable, for example, the elastic scattering of a neutron near a single-particle bound state over the core of a target nucleus. An important merit of the Green functions method is that it makes it possible to take into account the influence of collective states on the nuclear reaction cross-section. "In conclusion, the author thanks Yu. M. Shirokov and N. P. Yudin for useful discussion and interest in the work". Orig. art. has: 41 formulas.

ASSOCIATION: NAUCHNO-ISSLEDOVATEL'SKIY INSTITUT YADERNOY FIZIKI (Scientific Research Institute of Nuclear Physics)

SUBMITTED: 01Apr63 DATE ACQ: 12Mar64 ENCL: 00

SUB CODE: PH NO REF SOV: 001 OTHER: 005

Card 2/2

APPROVED FOR RELEASE: 07/19/2001 CIA-RDP86-00513R002064830001-7"

"APPROVED FOR RELEASE: 07/19/2001 CIA-RDP86-00513R002064830001-7

ACCESSION NR: AP4033630 S/0188/64/000/002/0008/0015

AUTHOR: Zhivopistsev, F. A.

TITLE: Certain properties of irreversible processes in quantum mechanics

SOURCE: Moscow. Universitet. Vestnik. Seriya III. Fizika, astronomiya, no. 2, 1964, 8-15

TOPIC TAGS: quantum mechanics, irreversible process, quantum theory, Bloch equation

ABSTRACT: On the basis of the quantum theory of irreversible processes the author has investigated the scattering of a particle in a complex physical system of finite dimensions. On the assumption of the smallness of energy of interaction, an equation has been derived for a single-particle density matrix relating diagonal and nondiagonal matrix elements. The derived equation

$$\frac{d}{dt}(g|\sigma|g') + \frac{i}{\hbar}(g|[H_1^0, \sigma]|g') = \left(\frac{\lambda}{i\hbar}\right)^2 \{(g|\Gamma(\sigma)|g') + (g|\Pi(\sigma)|g')\},$$

differs from the well-known Bloch equation by having an additional term which changes the character of dissipation. The derived equation is used in an investi-

Card 1/2

APPROVED FOR RELEASE: 07/19/2001 CIA-RDP86-00513R002064830001-7"

"APPROVED FOR RELEASE: 07/19/2001 CIA-RDP86-00513R002064830001-7

ACCESSION NR: AP4033630

gation of a system of interacting oscillators and the interaction of an electron with the radiation field. "The author expresses thanks to Yu. M. Shirokov for useful discussion and interest in the work". Orig. art. has: 38 formulas.

ASSOCIATION: Nauchno-issledovatel'skiy institut yadernoy fiziki (Scientific Research Institute of Nuclear Physics)

SUBMITTED: 01Apr63 DATE ACQ: 30Apr64 ENCL: 00

SUB CODE: GP NO REF SOV: 002 OTHER: 008

Card 2/2

APPROVED FOR RELEASE: 07/19/2001 CIA-RDP86-00513R002064830001-7"

"APPROVED FOR RELEASE: 07/19/2001 CIA-RDP86-00513R002064830001-7

ACCESSION NR: AP4043798 S/0188/64/000/004/0045/0051

AUTHOR: Zhivopistsev, F. A.

TITLE: Inelastic scattering of nucleons on nuclei and the quantum Green's functions method

SOURCE: Moscow. Universitet. Vestnik. Seriya 3. Fizika, astronomiya, no. 4, 1964, 45-51

TOPIC TAGS: nucleus, nucleon, Green function, inelastic nucleon scattering, magic nucleus, nucleon scattering, quantum theory

ABSTRACT: This paper discusses the nuclear reactions (n, n'), (p, p'), (n, p) and (p, n) in a nucleus of the magic plus nucleon type and the nuclear reactions (d, n), (d, p) and (d, np) in a magic nucleus with energies of the incident particles lower than the threshold of excitation of the magic nucleus core. For example, for an O^{17} nucleus the energy of the entrance channel is $\lesssim$ 6 Mev, for Ca^{41} $\lesssim$ 3.35 Mev and for Pb^{209} $\lesssim$ 2.6 Mev. With these energies of incident particles the magic nucleus core in the final state can be considered unperturbed. For the reactions considered the target nucleus is either a nucleus with one particle outside the filled shell, one hole in the filled shell or a magic nucleus. It is assumed that the first excited states of a nucleus of the magic plus nucleon type are interpreted well as

Card 1/2

APPROVED FOR RELEASE: 07/19/2001 CIA-RDP86-00513R002064830001-7"

"APPROVED FOR RELEASE: 07/19/2001 CIA-RDP86-00513R002064830001-7

ACCESSION NR: AP4043798

single-particle ("hole") levels. These assumptions are natural and unique in derivation of precise expressions for the S matrix. The S matrix for the indicated reactions is related to a two-particle Green's function, which includes all the information concerning the physical properties of the interacting particles. Resonances in the scattering cross section are determined by the poles of the analytic continuation of a two-particle Green's function. The matrix elements of the T matrix of scattering are determined by the corresponding matrix elements of a Fourier transform of the top part. It is shown that the problem of inelastic scattering of a nucleon on a nucleus of the magic plus nucleon type is determined in the first approximation by the two-particle amplitude of scattering of free nucleons and the optical potential of the magic nucleus. The cross section of nuclear reactions is found without using the usual perturbation theory. "The author wishes to thank Yu. M. Shirokov for useful discussions and interest in the work." Orig. art. has: 29 formulas.

ASSOCIATION: NIIYaF

SUBMITTED: 21Jun63 ENCL: 00

SUB CODE: NP NO REF SOV: 003 OTHER: 006

Card 2/2

APPROVED FOR RELEASE: 07/19/2001 CIA-RDP86-00513R002064830001-7"

"APPROVED FOR RELEASE: 07/19/2001 CIA-RDP86-00513R002064830001-7

APPROVED FOR RELEASE: 07/19/2001 CIA-RDP86-00513R002064830001-7"

"APPROVED FOR RELEASE: 07/19/2001 CIA-RDP86-00513R002064830001-7

APPROVED FOR RELEASE: 07/19/2001 CIA-RDP86-00513R002064830001-7"

"APPROVED FOR RELEASE: 07/19/2001 CIA-RDP86-00513R002064830001-7

ZHIVOPISTSEV, F.A.; YUDIN, N.P.

Ground state correlation effects in nuclear reactions. Vest.Mosk. un. Ser. 3: Fiz., astron. 20 no.2:30-34 Mr-Ap '65. (MIRA 18:5)

1. Nauchno-issledovatel'skiy institut yadernoy fiziki Moskovskogo universiteta.

APPROVED FOR RELEASE: 07/19/2001 CIA-RDP86-00513R002064830001-7"

"APPROVED FOR RELEASE: 07/19/2001 CIA-RDP86-00513R002064830001-7

L 41300-66 EWT(m)

ACC NR: AP6019624 A, N SOURCE CODE: UR/0048/66/030/002/0312/0318

39
B

AUTHOR: Zhivopistsev, F.A.; Yudin, N.P.

ORG: Scientific Research Institute of Nuclear Physics, Moscow State University im. M.V.Lomonosov (Nauchno-issledovatel'skiy institut yadernoy fiziki Moskovskogo gosudarstvennogo universiteta)

TITLE: Effect of correlations in the ground state on nuclear reactions /Report, Fifteenth Annual Conference on Nuclear Spectroscopy and Nuclear Structure, held at Minsk, 25 January to 2 February 1965/

SOURCE: AN SSSR. Izvestiya. Seriya fizicheskaya, no.2, v. 30, 1966, 312-318

TOPIC TAGS: nuclear reaction, mathematic method, Green function, many body problem

ABSTRACT: The authors discuss the effect on nuclear reactions of correlations in the ground state (backward Feynman diagrams), particularly with regard to excitation of 1^-, T = 1 or 3^-, T = 0 vibrational levels. The calculations are based on the Lippman-Schwinger formalism and the Green's function treatment of the nuclear many-body problem as presented by A.Klein and C.Zemach (Phys.Rev., 108, 126 (1957)). Formulas are written for the T-matrix elements for the (p,p'), (d,p), and (d,pc) reactions (here c indicates excitation of a vibrational level of the final nucleus) in terms of the corresponding wave functions and vertex functions. An expression including the effect of ground state correlations is derived for the Fourier transform of the product

Card 1/2

APPROVED FOR RELEASE: 07/19/2001 CIA-RDP86-00513R002064830001-7"

"APPROVED FOR RELEASE: 07/19/2001 CIA-RDP86-00513R002064830001-7

L 41300-66

ACC NR: AP6019624

of two single-particle Green's functions, with the aid of which the two-particle Green's function can be calculated. The three-particle Green's function, required to calculate the matrix element for the (d,pc) reaction, is calculated in the pole approximation from the two-particle Green's function. The matrix elements for the reactions, calculated with and without taking into account the ground state correlations, are compared, and it is concluded that the contribution of backward Feynman diagrams is particularly important in the case of excitation of particle-hole type collective states, especially of 3^-, T = 0 states in light nuclei and 1^- states in heavy ones. An advantage claimed for the presented calculation technique is that it enables one to judge the relative importance of the ground state correlations without performing detailed numerical computations. Orig. art. has: 41 formulas, 1 figure and 1 table.

SUB CODE: 20 DATE SUBM: 00 ORIG. REF: 000 OTH REF: 006

Card 2/2

APPROVED FOR RELEASE: 07/19/2001 CIA-RDP86-00513R002064830001-7"

"APPROVED FOR RELEASE: 07/19/2001 CIA-RDP86-00513R002064830001-7

L 41301-66 EWT(m)

ACC NR: AP 6019623 (A,N) SOURCE CODE: UR/0048/66/030/002/0306/0311

AUTHOR: Zhivopistsev, F.A.; Moskovkin, V.M.; Yudin, N.P.

ORG: Scientific Research Institute of Nuclear Physics, Moscow State University im. M.V.Lomonosov (Nauchno-issledovatel'skiy institut yadernoy fiziki Moskovskogo gosudarstvennogo universiteta)

40
B

TITLE: On the nature of the width of the dipole resonance in photonuclear reactions /Report, Fifteenth Annual Conference on Nuclear Spectroscopy and Nuclear Structure, held at Minsk, 25 January to 2 February 1965/

SOURCE: AN SSSR. Izvestiya. Seriya fizicheskaya, v. 30, no. 2., 1966, 306-311

TOPIC TAGS: nuclear reaction, nuclear structure, nuclear shell model, dipole interaction

ABSTRACT: The authors ascribe the anomalous width of the dipole resonance in heavy nuclei to the interaction of the dipole level with nuclear configurations whose energies are near that of the dipole level but which themselves do not, or practically do not, carry dipole transitions, and in particular, to interaction with configurations consisting of two particle-hole pairs of which one arises from promotion of a nucleon from a filled state with $j = l + 1/2$ to a free state with $j = l - 1/2$ and the other is a particle-hole pair of the type considered in the usual treatment of the dipole resonance. The matrix elements coupling the two particle-hole pair configurations to

Card 1/2

L 41301-66

APPROVED FOR RELEASE: 07/19/2001 CIA-RDP86-00513R002064830001-

ACC NR: AP6019623

the single particle-hole configurations are written for the case of a delta-function Wigner interaction. The density of the two particle-hole states in Pb^{208}, their distribution with respect to the angular momenta of the two pairs, and their contribution to the width of the dipole resonance under the assumption that they interact incoherently with it were calculated. The results of those calculations, but not the calculations themselves, are presented. It is concluded that interaction with the two particle-hole pair states increases the width of the dipole resonance in Pb^{208} from the standard R-matrix theory value of some 200 keV to approximately 3 MeV (which may be compared with the experimental value of about 4 MeV), and that all the two particle-hole pair states of the type considered, with arbitrary allowed values of the angular momentum of the secondary pair, contribute significantly to the width of the dipole resonance. Most of the discussion is limited to the case of magic nuclei; it is concluded, however, that in nonmagic nuclei the dipole resonance should be even broader. Orig.art. has: 4 formulas, 2 figures, and 1 table.

SUB CODE: 20 SUBM DATE: 00 ORIG. REF: 006 OTH REF: 003

Card 2/2 hs

"APPROVED FOR RELEASE: 07/19/2001 CIA-RDP86-00513R002064830001-7

ZHIVOPISTSEV, F.A.

Effects of two-particle excitations in a stripping reaction. Vest. Mosk.un. Ser. 3: Fiz., astron. 20 no.4:13-19 Jl-Ag '65. (MIRA 18:12)

1. Nauchno-issledovatel'skiy institut yadernoy fiziki Moskovskogo gosudarstvennogo universiteta. Submitted April 7, 1964.

APPROVED FOR RELEASE: 07/19/2001 CIA-RDP86-00513R002064830001-7"

"APPROVED FOR RELEASE: 07/19/2001 CIA-RDP86-00513R002064830001-7

PETROVSKIY, V.S.; ZHIVOPISTSEV, V.A.

Selecting the system of control of the processes of dehydration and drying of salts in a fluidized bed. Trudy NIUIF no.208:168-176 '65. (MIRA 18:11)

APPROVED FOR RELEASE: 07/19/2001 CIA-RDP86-00513R002064830001-7"

"APPROVED FOR RELEASE: 07/19/2001 CIA-RDP86-00513R002064830001-7

V.P.Zhivopistsev. A new method of quantitative determination of cadmium. P. 1186

The A.M.Gor'kii
Molotov State Univ.

SO: Factory Laboratory, No. 10, 1950

APPROVED FOR RELEASE: 07/19/2001 CIA-RDP86-00513R002064830001-7"

"APPROVED FOR RELEASE: 07/19/2001 CIA-RDP86-00513R002064830001-7

1ST AND 2ND ORDERS

PROCESSES AND PROPERTIES INDEX

15

Possibility of Application of Diantipyrylmethane in Inorganic Analysis. (In Russian.) V. P. Zhivopistsev. *Doklady Akademii Nauk SSSR* (Reports of the Academy of Sciences of the USSR), new ser., v. 73, Aug. 21, 1950, p. 1193-1196.

Study of complex-compound formation of the above compound ($C_{23}H_{24}O_2N_4$) with a series of elements, such as Co, Cd, Hg, Zn, Bi, Fe, showed that insoluble complexes are formed. Proposes method for use in qualitative and quantitative determination of Co and Cd.

METALLURGICAL LITERATURE CLASSIFICATION

APPROVED FOR RELEASE: 07/19/2001 CIA-RDP86-00513R002064830001-7"

"APPROVED FOR RELEASE: 07/19/2001 CIA-RDP86-00513R002064830001-7

CA

7

Drop test for cobalt with dimethylaminoantipyrine. V. P. Zhivopistsev (State Univ., Molotov). *Zhur. Obshchei Khim.* (J. Gen. Chem.) 21, 481-5(1951); cf. *C.A.* 45, 4026, Gusev, *C.A.* 41, 317g. In neutral or nearly neutral soln. Co ion reacts with pyramidone (= Pyr) and CNS ions yielding $Co(Pyr)_2(CNS)_2$. As the pH of the soln. drops below 3-4, only $(Pyr)H_2[Co(CNS)_4]$ can exist, while at pH above 6 it is transformed completely into $Co(Pyr)_2(CNS)_2$. Since the complexes (acidic) of Zn and Co are isomorphous, this fact can be used to improve the sensitivity of the Co test. The most satisfactory results are obtained by using 4% NH_4CNS soln., along with 1.6 g. pyramidone and 16 ml. 2 N HCl. The test is sensitive to 0.4 γ of Co when 2% $ZnSO_4.7H_2O$ soln. is used as the auxiliary reagent. Alkali and alk. earth ions do not interfere; the cations of the $(NH_4)_2S$ group do not interfere, with the exception of Fe^{+++}; Cr and Ni do not interfere unless present in very large amts. and even then their color moves to the spot boundary and is not serious. Ferric salts must be reduced to ferrous; blocking with fluorides is ineffective. The test soln. must be definitely acidic. The bright blue color is very distinct.

G. M. Kosolapoff

APPROVED FOR RELEASE: 07/19/2001 CIA-RDP86-00513R002064830001-7"

"APPROVED FOR RELEASE: 07/19/2001 CIA-RDP86-00513R002064830001-7

ZHIVOPISTSEV, V.P.

New method of purifying salts of nickel, manganese, and other elements with the aid of diantipyrylmethane. Zhur. Priklad. Khim. 26, 335-6 '53. (CA 47 no.22:12113 '53) (MLRA 6:3)

1. A.M. Gor'kiy State Univ., Molotov.

APPROVED FOR RELEASE: 07/19/2001 CIA-RDP86-00513R002064830001-7"

"APPROVED FOR RELEASE: 07/19/2001 CIA-RDP86-00513R002064830001-7

ZHIVOPISTSEV, V.P.

USSR.

Potentiometric determination of cadmium with diantipyrinylmethane [illegible] metric determination [illegible] potentiometric [illegible] of [illegible] [illegible] the ppth of the complex is retarded and the soln must be set aside for 2 to 1 hr. If large amounts of Fe[illegible] are present the acidified soln is heated almost to boiling with [illegible] and a few drops of diantipyrinylmethane soln; the disappearance of the red colour indicates complete reduction of the Fe[illegible] (one ml of 0.1 N KI [illegible]). The relative error is less than [illegible] per cent. [illegible] Zn [illegible] Mn [illegible] Mg and small amounts of alkaline earth metals do not interfere. E. Hayes

APPROVED FOR RELEASE: 07/19/2001 CIA-RDP86-00513R002064830001-7"

"APPROVED FOR RELEASE: 07/19/2001 CIA-RDP86-00513R002064830001-7

APPROVED FOR RELEASE: 07/19/2001 CIA-RDP86-00513R002064830001-7"

"APPROVED FOR RELEASE: 07/19/2001 CIA-RDP86-00513R002064830001-7

APPROVED FOR RELEASE: 07/19/2001 CIA-RDP86-00513R002064830001-7"

"APPROVED FOR RELEASE: 07/19/2001 CIA-RDP86-00513R002064830001-7

APPROVED FOR RELEASE: 07/19/2001 CIA-RDP86-00513R002064830001-7"

"APPROVED FOR RELEASE: 07/19/2001 CIA-RDP86-00513R002064830001-7

APPROVED FOR RELEASE: 07/19/2001 CIA-RDP86-00513R002064830001-7"

"APPROVED FOR RELEASE: 07/19/2001 CIA-RDP86-00513R002064830001-7

APPROVED FOR RELEASE: 07/19/2001 CIA-RDP86-00513R002064830001-7"

"APPROVED FOR RELEASE: 07/19/2001 CIA-RDP86-00513R002064830001-7

APPROVED FOR RELEASE: 07/19/2001 CIA-RDP86-00513R002064830001-7"

"APPROVED FOR RELEASE: 07/19/2001 CIA-RDP86-00513R002064830001-7

AUTHOR: Zhivopistsev, V. P. 15358-1-10/29

TITLE: On the Applications of Dimethyl-Amine-Diphenyl-Antipyryl-Carbinol in Inorganic Analysis(O vozmozhnosti primeneniya dimetilaminodifenilantipirilkarbinola v neorganicheskom analize)

PERIODICAL: Izvestiya vysshikh uchebnykh zavedeniy, Khimiya i khimicheskaya technologiya, 1958, Nr 1, pp. 65-68 (USSR)

ABSTRACT: It was proved that the diaryl-antipyrryl-methane-dyes may be used for both the quantitative and qualitative determination of a number of elements (Ref 1). The author found it advisable to investigate the dependence of reactivity of individual dyes on their structure, in order to find out the most sensitive and most specific reagents with respect to these or those elements. According to the well-known theorem on the dependence of the sensitivity of reaction on the number of hydrophile groups in the molecule of the reagent, it could be expected that e.g. tetra-methyl-diamino-diphenyl—antipyrryl-carbinol (Ref 1) must be less sensitive than analogously built dyes which con-

Card 1/5

APPROVED FOR RELEASE: 07/19/2001 CIA-RDP86-00513R002064830001-7"

"APPROVED FOR RELEASE: 07/19/2001 CIA-RDP86-00513R002064830001-7

On the Applications of Dimethyl-Amine-Diphenyl-Antipyrryl-Carbinol in Inorganic Analysis 153-58-1-10/29

tain, however, a smaller quantity of hydrophile groups. The investigations of the dye referred to in the title proved that this substance reminds of the last-mentioned dye with respect to its general reactivity, but that its reactions are - as was expected - substantially more sensitive that those of the latter. In an acid medium the substance referred to in the title forms difficultly soluble compounds with zinc, iron (III), cobalt, molybdenum, tungsten, tin, cadmium and bismuth, in the presence of thiocyanate ions. It can be used for the qualitative determination of some of these elements. A method for zinc and iron is given. The determination of zinc in the presence of other elements was equally investigated (table). As results from this the following elements do not disturb the determination of zinc: Manganese, iron (II), chromium, nickel, magnesium and other metals of alkaline earths, and alkaline metals. The following elements exercise a disturbing effect: Mercury, cobalt, molybdenum, copper, cadmium, bismuth, animony, iron (III). They, too,

Card 2/5

APPROVED FOR RELEASE: 07/19/2001 CIA-RDP86-00513R002064830001-7"

"APPROVED FOR RELEASE: 07/19/2001 CIA-RDP86-00513R002064830001-7

On the Applications of Dimethyl-Amine-Diphenyl-Antipyrryl-Carbinol in Inorganic Analysis

153-58-1-10/29

form difficultly soluble compounds with the reagent. As in the case of determination of zinc, by means of tetra-methyl-diamino-phenyl-antipyrryl-carbinol, a slight change of the method makes the determination of zinc in the presence of all above-mentioned elements possible. For this purpose the solution to be investigated is first submitted to a treatment with ammonium sulfide. The sensitivity is somewhat decreased in this connection. An acid solution of the dye (0,03-0,04%) and of ammonium thiocyanate (5%) is used as reagent for zinc. This reagent may also be used for the determination of trivalent iron. The minimum detectable in this connection, amounts to 0,9 to 1,0 the maximum dilution is 1: 300000. The same metals which do not prevent the determination of zinc, neither prevent that of iron. The concerned dye may also be used for the quantitative separation of small quantities of iron from other elements (aluminium, chromium, nickel, magnesium). In the presence of iodide-ions the dye forms difficultly soluble compounds with mercury, bismuth, cadmium and

Card 3/5

APPROVED FOR RELEASE: 07/19/2001 CIA-RDP86-00513R002064830001-7"

"APPROVED FOR RELEASE: 07/19/2001 CIA-RDP86-00513R002064830001-7

On the Applications of Dimethyl-Amine-Diphenyl-Antipyrryl-Carbinol in Inorganic Analysis 153-58-1-10/29

other elements capable of forming metaloidic complex ions. The difficultly accessible cinchonine can be replaced without difficulty in the determination of bismuth by the dye which was synthesized by the author. It is also successfully used for the determination of cadmium, moreover for mercury and for the quantitative separation of zinc, iron, aluminum, chromium, manganese, cobalt, nickel, alkaline metals and metals of alkaline earths which do not react with the dye in the presence of iodide-ions. A 10% potassium-iodide-solution prepared with 1 n-HCl and saturated in proportion to the dye serves as reagent in this case. The concerned dye may be used as organic collector for the isolation of small quantities of zinc, iron, mercury, cobalt and others, by adding the dye-solution (0,2 to 0,3%) to the acidified solution containing thiocyanate ions. The afore-said elements are coprecipitated with the relatively difficultly soluble thiocyanate-hydrogen-salt of the dye. Concluding, the method of synthesis of the concerned dye is given.

Card 4/5

APPROVED FOR RELEASE: 07/19/2001 CIA-RDP86-00513R002064830001-7"

"APPROVED FOR RELEASE: 07/19/2001 CIA-RDP86-00513R002064830001-7

On the Applications of Dimethyl-Amine-Diphenyl-Antipyrryl-Carbinol in Inorganic Analysis 153-58-1-10/29

There are 1 table and 2 references, all of which are Soviet.

ASSOCIATION: Permskiy universite im. A. M. Gor'kogo, Kafedra organicheskoy khimii (Perm' University imeni A.M. Gor'kiy, Chair for Organic Chemistry)

SUBMITTED: September 11, 1957

Card 5/5

APPROVED FOR RELEASE: 07/19/2001 CIA-RDP86-00513R002064830001-7"

"APPROVED FOR RELEASE: 07/19/2001 CIA-RDP86-00513R002064830001-7

ZHIVOPISTSEV, V.P.

Possible titrimetric determinations of small amounts of elements with use of dyes. Trudy kom. anal. khim. 11:52-57 '60. (MIRA 13:10)

1. Permskiy gosudarstvennyy universitet.
(Dyes and dyeing) (Titration)

APPROVED FOR RELEASE: 07/19/2001 CIA-RDP86-00513R002064830001-7"

"APPROVED FOR RELEASE: 07/19/2001 CIA-RDP86-00513R002064830001-7

S/032/60/026/012/005/036
B020/B056

AUTHORS: Zhivopistsev, V. P., Minin, A. A.

TITLE: Separation and Successive Determination of Iron, Titanium, and Aluminum by Means of Diantipyrylmethane

PERIODICAL: Zavodskaya laboratoriya, 1960, Vol. 26, No. 12, pp. 1346-1347

TEXT: Diantipyrylmethane in acid solution gives difficultly soluble or colored compounds with a number of elements in the presence of thiocyanogen- and halide-ions. The yellow compound of trivalent iron with this reagent in a strong HCl solution is extracted with chloroform, whereas titanium and aluminum remain in the aqueous solution. These elements may be isolated by the introduction of ammonium thiocyanate. Iron and titanium may, according to their quantity, be determined gravimetrically or colorimetrically. The course of the analysis is exactly described. By the colorimetrical method suggested, Fe and Ti may be determined in the presence of fluorides, phosphates, and small quantities of silicic acid, in which case the latter need not be removed when determining only iron and titanium in titanium magnetites, concentrates, and alloys. The accuracy of titanium

Card 1/2

APPROVED FOR RELEASE: 07/19/2001 CIA-RDP86-00513R002064830001-7"

"APPROVED FOR RELEASE: 07/19/2001 CIA-RDP86-00513R002064830001-7

Separation and Successive Determination of Iron, Titanium, and Aluminum by Means of Diantipyrylmethane

S/032/60/026/012/005/036
B020/B056

determination is 1-2 γ/ml solution; thus the accuracy of the method corresponds to that carried out with chromotropic acid. Buffering of the solutions is not necessary; in this way samples with an Fe and Ti content of some hundredth or tenth percent may be analyzed. The method was tested on standard samples of titanium concentrates, bauxites, alumina, and refractories.

ASSOCIATION: Permskiy gosudarstvennyy universitet (Perm' State University)

Card 2/2

APPROVED FOR RELEASE: 07/19/2001 CIA-RDP86-00513R002064830001-7"

"APPROVED FOR RELEASE: 07/19/2001 CIA-RDP86-00513R002064830001-7

S/081/61/000/021/028/094
B101/B147

AUTHORS: Zhivopistsev, V. P., Zenkova, N. I.

TITLE: Colorimetric determination of bismuth by diantipyryl methane

PERIODICAL: Referativnyy zhurnal. Khimiya, no. 21, 1961, 108 - 109, abstract 21D89 (Izv. Yestestvennonauchn. in-ta pri Permsk. un-te, v. 14, no. 4, 1960, 77 - 81)

TEXT: The authors suggest a method of determining small amounts of Bi based on the photocolorimetric determination of chloroform extracts of the compound formed during reaction of tetraiodo bismuthate with diantipyryl methane (I). The solution containing 0.02 - 0.3 mg Bi is mixed with 25 milliliters (ml) of $CHCl_3$, 2 - 3 ml of a 10% solution of ascorbic acid (II), 5 - 6 ml of a 10% KI solution, and 10 ml of a 5% solution of I in 0.5 N HCl. After 3 - 5 min shaking, the organic layer is photometrically referred to chloroform by a photoelectric colorimeter and blue light filter in a 2-cm cuvette. In the presence of >1 - 2% Cu, the solution is mixed with 3 - 4 ml of a 10% solution of II, 5 - 6 ml of a 10% solution of KI, and the resulting Cu_2I_2 precipitate is filtered off

Card 1/2

APPROVED FOR RELEASE: 07/19/2001 CIA-RDP86-00513R002064830001-7"

"APPROVED FOR RELEASE: 07/19/2001 CIA-RDP86-00513R002064830001-7

after a few minutes. It is washed with a small amount of water. The filtrate is mixed with 25 ml of $CHCl_3$, 10 ml of a 5% solution of thiourea, 10 ml of a 5% solution of I, and shaken for 3 - 5 min. In the presence of large amounts of Cu^{2+} and Fe^{3+}, the filtrate is mixed with a 5% NH_3 solution (in portions of 2 - 3 ml) until the organic layer assumes a pure, red-orange color. A smaller amount of $CHCl_3$ is used when determining small Bi quantities. Bi determination is not disturbed by $<$10,000-fold excess of alkali and earth-alkali elements, Mg^{2+}, Al^{3+}, Cr^{3+}, Ni^{2+}, Co^{2+}, Zn^{2+}, and Mn^{2+}, a $<$1000-fold excess of Cd^{2+}, a $<$500-fold excess of Fe^{3+}, and a $<$300-fold excess of Cu^{2+}. Analytical error $<$4%. [Abstracter's note: Complete translation.]

APPROVED FOR RELEASE: 07/19/2001 CIA-RDP86-00513R002064830001-7"

"APPROVED FOR RELEASE: 07/19/2001 CIA-RDP86-00513R002064830001-7

BUSEV, A.I.; SKREBKOVA, L.M.; ZHIVOPISTSEV, V.P.

Certain antipyrine dyes as reagents for the photometric determination of gallium. Zhur.anal.khim. 17 no.6:685-692 S '62. (MIRA 16:1)

1. Moskovskiy gosudarstvennyy universitet im. Lomonosova.
(Antipyrine) (Gallium--Analysis)

APPROVED FOR RELEASE: 07/19/2001 CIA-RDP86-00513R002064830001-7"

"APPROVED FOR RELEASE: 07/19/2001 CIA-RDP86-00513R002064830001-7

ZHIVOPISTSEV, V.P.; AITOVA, V.Kh.; SELEZNEVA, Ye.A.

Successive separation and determination of some elements by means of diantipyrylmethane. Part 1: Separation and determination of zinc and cadmium. Izv.vys.ucheb.zav.;khim.i khim.tekh. 6 no.5:739-743 '63. (MIRA 16:12)

1. Permskiy gosudarstvennyy universitet imeni A.M.Gor'kogo, kafedra organicheskoy khimii.

APPROVED FOR RELEASE: 07/19/2001 CIA-RDP86-00513R002064830001-7"

"APPROVED FOR RELEASE: 07/19/2001 CIA-RDP86-00513R002064830001-7

ZHIVOPISTSEV, V.P.; AITOVA, V.Kh.; SELEZNEVA, Ye.A.

Subsequent separation and determination of some elements by means of diantipyrylmethane. Izv.vys.ucheb.zav.; khim. i khim. tekh. 6 no.6:909-912 '63. (MIRA 17:4)

1. Permskiy gosudarstvennyy universitet imeni Gor'kogo, kafedra organicheskoy khimii.

APPROVED FOR RELEASE: 07/19/2001 CIA-RDP86-00513R002064830001-7"

"APPROVED FOR RELEASE: 07/19/2001 CIA-RDP86-00513R002064830001-7

ZHIVOPISTSEV, V.P.; MININ, A.A.; MILYUTINA, L.L.; SELEZNEVA, Ye.A.; AITOVA, V.Kh.

Extraction separation and determination of some elements by means of diantipyrylmethane. Trudy Kom.anal.khim. 14:133-140 '63. (MIRA 16:11)

APPROVED FOR RELEASE: 07/19/2001 CIA-RDP86-00513R002064830001-7"

"APPROVED FOR RELEASE: 07/19/2001 CIA-RDP86-00513R002064830001-7

ZHIVOPISTSEV, V.P.; CHEINOKOVA, M.N.

Antipyrine dyes as analytical reagents. Report No.1: Relation between structure and reactivity of dyes. Zhur. anal. khim. 18 no.2:148-153 F '63. (MIRA 17:10)

1. Perm State University.

APPROVED FOR RELEASE: 07/19/2001 CIA-RDP86-00513R002064830001-7"

"APPROVED FOR RELEASE: 07/19/2001 CIA-RDP86-00513R002064830001-7

ZHIVOPISTSEV, V.P.; CHELNOKOVA, M.N.

Antipyrine dyes as analytical reagents. Report No.2: Photometric methods for the determination of cadmium. Zhur.anal.khim. 18 no.6:717-720 Je '63. (MIRA 16:9)

1. A.M. Gorky Perm State University.
(Cadmium—Analysis) (Antipyrine)

APPROVED FOR RELEASE: 07/19/2001 CIA-RDP86-00513R002064830001-7"

"APPROVED FOR RELEASE: 07/19/2001 CIA-RDP86-00513R002064830001-7

APPROVED FOR RELEASE: 07/19/2001 CIA-RDP86-00513R002064830001-7"

"APPROVED FOR RELEASE: 07/19/2001 CIA-RDP86-00513R002064830001-7

APPROVED FOR RELEASE: 07/19/2001 CIA-RDP86-00513R002064830001-7"

"APPROVED FOR RELEASE: 07/19/2001 CIA-RDP86-00513R002064830001-7

APPROVED FOR RELEASE: 07/19/2001 CIA-RDP86-00513R002064830001-7"

"APPROVED FOR RELEASE: 07/19/2001 CIA-RDP86-00513R002064830001-7

ZHIVOPISTSEV, V.P.; SELEZNEVA, Ye.A.

Extraction-complexometric determination of cobalt in iron, copper, and nickel-based alloys. Zav.lab. 29 no.12:1421-1423 '63. (MIRA 17:1)

1. Permskiy gosudarstvennyy universitet.

APPROVED FOR RELEASE: 07/19/2001 CIA-RDP86-00513R002064830001-7"

"APPROVED FOR RELEASE: 07/19/2001 CIA-RDP86-00513R002064830001-7

ZHIVOPISTSEV, V.P.; KALMYKOVA, I.S.

Quatitative determination of scandium after its separation as an iodide complex with diantipyrylmethane. Zhur. anal. khim. 19 no. 1:69-72 '64. (MIRA 17:5)

1. Permskiy gosudarstvennyy universitet.

APPROVED FOR RELEASE: 07/19/2001 CIA-RDP86-00513R002064830001-7"

"APPROVED FOR RELEASE: 07/19/2001 CIA-RDP86-00513R002064830001-7

ZHIVOPISTSEV, V.P.; KALMYKOVA, I.S.

Complex formation in the scandium-diantipyrylmethane-iodide system. Zhur. neorg. khim. 10 no.5:1126-1130 My '65.
(MIRA 18:6)

APPROVED FOR RELEASE: 07/19/2001 CIA-RDP86-00513R002064830001-7"

"APPROVED FOR RELEASE: 07/19/2001 CIA-RDP86-00513R002064830001-7

L 1475-66

ACCESSION NR: AP5022166 UR/0032/65/031/009/1043/1048
543-4

44,55

AUTHOR: Zhivopistsev, V. P.

12
B

TITLE: Use of diantipyrylmethane in analytic chemistry 44,55

SOURCE: Zavodskaya laboratoriya, v. 31, no. 9, 1965, 1043-1048

TOPIC TAGS: metal chemical analysis, chemical identification, quantitative analysis, analytic chemistry

ABSTRACT: The low solubility of the salts and complexes of diantipyrylmethane in aqueous solutions and their high solubility in most organic solvents, as well as the intense color displayed by a number of such compounds, have led to the development of analytical methods for determining and separating over 30 elements by means of this reagent. A table listing the elements and the corresponding methods is given. Gravimetry, photometry, extractive complexometric methods, polarography and potentiometry, and concentration of traces of elements are reviewed on the basis of data reported in the literature. The reactivity of the reagent, simplicity of its synthesis, and ease of its regeneration in the course of the analyses are factors which permit its recommendation for extensive adoption in factory laboratories, particularly since its production by the domestic industry

Card 1/2

APPROVED FOR RELEASE: 07/19/2001 CIA-RDP86-00513R002064830001-7"

"APPROVED FOR RELEASE: 07/19/2001 CIA-RDP86-00513R002064830001-7

L 1475-66

ACCESSION NR: AP5022166

has already begun. Orig. art. has: 1 table.

ASSOCIATION: None

SUBMITTED: 00 ENCL: 00 SUB CODE: OC, GC

NO REF SOV: 080 OTHER: 002

Card 2/2

APPROVED FOR RELEASE: 07/19/2001 CIA-RDP86-00513R002064830001-7"

"APPROVED FOR RELEASE: 07/19/2001 CIA-RDP86-00513R002064830001-7

ACCESSION NR: AP4009724 S/0075/64/019/001/0069/0072

AUTHOR: Zhivopistsev, V. P.; Kalmy*kova, I. S.

TITLE: Quantitative determination of scandium after its isolation as iodide complex with diantipyrylmethane

SOURCE: Zhurnal analiticheskoy khimii, v. 19, no. 1, 1964, 69-72

TOPIC TAGS: scandium isolation, scandium diantipyrylmethane complex, scandium triple complex, complexometric titration, isomolar series, iodide complex

ABSTRACT: In continuation of earlier work, this highly selective method was evolved for isolating scandium in materials containing lanthanum, the rare earth elements, yttrium, aluminum, chromium, nickel, cobalt, beryllium, magnesium, manganese, small amounts of titanium, calcium, barium, strontium, iron and alkali metals. In tests performed scandium was the only element to form, with the two reagents in weakly acidic solution (HCl), a triple complex which dissolved easily in chloroform and dichloroethane. The so separated

Card 1/2

APPROVED FOR RELEASE: 07/19/2001 CIA-RDP86-00513R002064830001-7"

"APPROVED FOR RELEASE: 07/19/2001 CIA-RDP86-00513R002064830001-7

ACCESSION NR: AP4009724

scandium could be determined by complexometric titration. An excess of the latter reagent is required (molar ratio 1:3). The relative error was 2% at most. A slight modification (adding complexon III and more reagents) will permit determination of scandium in the presence of zirconium and hafnium which form less stable iodide-diantipyrylmethane complexes. Interfering elements are large titanium quantities, cadmium, indium, mercury, bismuth, antimony. Orig. art. has: 1 figure, 2 tables.

ASSOCIATION: Permskiy gosudarstvenny*y universitet (State University, Perm')

SUBMITTED: 10Sep63 DATE ACQ: 14Feb64 ENCL: 00

SUB CODE: CH, EL NO REF SOV: 004 OTHER: 000

Card 2/2

APPROVED FOR RELEASE: 07/19/2001 CIA-RDP86-00513R002064830001-7"

"APPROVED FOR RELEASE: 07/19/2001 CIA-RDP86-00513R002064830001-7

ZHIVOPISTSEV, V.P.; SELEZNEVA, Ye.A.; LIPCHINA, A.P.; BRAGINA, Z.I.

Antipyrine dyes as analytical reagents. Report No. 3: Photometric determination of zinc. Zhur. anal. khim. 21 no. 1:28-33 '66 (MIRA 19:1)

1. Permskiy gosudarstvennyy universitet imeni Gor'kogo.

APPROVED FOR RELEASE: 07/19/2001 CIA-RDP86-00513R002064830001-7"

"APPROVED FOR RELEASE: 07/19/2001 CIA-RDP86-00513R002064830001-7

ZHIVOTAYEV, V.M.

Blocking clamp used in the resection of the bladder in patients with malignant neoplasms. Urologiia no.6:65-66'62. (MIRA 16:7)

1. Iz khirurgicheskogo otdeleniya (zav. Yu.S. Avramov) Artemovskoy bol'nitsy imeni Frunze.
(BLADDER—CANCER)
(SURGICAL INSTRUMENTS AND APPARATUS)

APPROVED FOR RELEASE: 07/19/2001 CIA-RDP86-00513R002064830001-7"

"APPROVED FOR RELEASE: 07/19/2001 CIA-RDP86-00513R002064830001-7

ZHIVOTINSKAYA, G.I.; PRON', V.M.

For concerted action of efficiency experts. Metallurg no.10:1-4 O '56. (MLRA 9:11)

1. Starshiy inzhener tekhnicheskogo otdela po izobretatel'stvu Stalinskogo metallurgicheskogo zavoda (for Zhivotinskaya);
2. Dnepropetrovskiy metallurgicheskiy institut (for Pron').
(Metallurgical research)

APPROVED FOR RELEASE: 07/19/2001 CIA-RDP86-00513R002064830001-7"

"APPROVED FOR RELEASE: 07/19/2001 CIA-RDP86-00513R002064830001-7

AUTHOR: Zhivotinskaya, G.I. SOV/130-58-6-16/20

TITLE: Innovators at the Stalino Metallurgical Works (Rastionalizatory Stalinskogo metallurgicheskogo Zavoda)

PERIODICAL: Metallurg, 1958, Nr 6, pp 34 - 35 (USSR).

ABSTRACT: At the Stalino Works, more than 1,500 people are involved in innovation work: in 1957, almost 1,000 participated and made 2,368 proposals (1,342 being adopted), leading to an annual saving of 3.8 million roubles. The author names the following contributors of successful proposals: G.M. Chekryakov, G.P. Kovtorin, I.P. Popov, V.I. Dubchenko (a compact contactor shown in Figure 2) and B.G. Cherkasov (who proposed a modification of the manipulator on the 710 heavy-section mill - Figure 1). There are 2 figures.

ASSOCIATION: Stalinskiy metallurgicheskiy zavod (Stalino Metallurgichal Works)

Card 1/1

1. Industry - USSR 2. Personnel - Performance
3. Industrial plants - Operation

APPROVED FOR RELEASE: 07/19/2001 CIA-RDP86-00513R002064830001-7"

"APPROVED FOR RELEASE: 07/19/2001 CIA-RDP86-00513R002064830001-7

ZHIVOTINSKAYA, L.

"Case of Thrombosis in the Chest Cavity Complicated with Diffused Purulent Leptomeningitis with Suppuration during the Healing Period",

Vest. Oto-rin-laringol., No. 4, 1948.

Dr., Otorhinolaryngological Dept., Dnepropetrovsk Hosp., Stalinsk RR., -c1948-.

APPROVED FOR RELEASE: 07/19/2001 CIA-RDP86-00513R002064830001-7"

"APPROVED FOR RELEASE: 07/19/2001 CIA-RDP86-00513R002064830001-7

ZHIVOTINSKAYA, L.A.

Result of application of sulfacylsodium)albucide-sodium) in the therapy of chronic suppurative otitis media and inflammation of the external auditory canal. Vest. otorinolar. 13 no.3:79 May-June 1951. (CLML 20:11)

1. Of the Division for Diseases of the Ear, Throat, and Nose (Scientific Director--Prof. L.A. Lukovskiy), Second Railroad Hospital (Head--A.I. Shchekoturov), Dnepropetrovsk.

APPROVED FOR RELEASE: 07/19/2001 CIA-RDP86-00513R002064830001-7"

"APPROVED FOR RELEASE: 07/19/2001 CIA-RDP86-00513R002064830001-7

USSR/Cultivated Plants - Subtropical and Tropical. M-6

Abs Jour : Ref Zhur - Biol., No 3, 1958, 11073

Author : Zhivotinskaya, S.M.

Inst :

Title : Prospective Varieties of Fig and Pomegranate for the South of Uzbekistan.

Orig Pub : Byul. nauchno-tekhn. inform., 1957, No 1, 19-22

Abstract : An investigation and selection of the best pomegranate and fig varieties, conducted by the South Uzbek Experimental Station from 1937 to 1956, demonstrated that in a group of 82 varieties of pomegranate and 36 varieties of fig, there are local varieties which come near to the world standard in the quality of their fruit. A description is given of the best local and acclimatized pomegranate and fig varieties.

Card 1/1

8

APPROVED FOR RELEASE: 07/19/2001 CIA-RDP86-00513R002064830001-7"

"APPROVED FOR RELEASE: 07/19/2001 CIA-RDP86-00513R002064830001-7

MIRZAYEV, M.M.; KUZNETSOV, V.V.; CHEREVATENKO, A.S.; CHERNOVALOVA, V.P.; TOSHMATOV, L.T.; KUL'KOV, O.P.; AMINOV, Kh.; ZHIVOTINSKAYA, S.M.; SHREDER, A.G.; LEPLINSKAYA, A.A.; PAVLOV, A.K.; SHAPIROV, S.K.; KALMYKOV, S.S.; YAGUDINA, S.I.; GULYAMOV, Kh.; DZHALALOV, Dzh.[translator]; SAIDAKHMEDOV, S.[translator]; BONDARENKO, M., red.; KADYROVA, R., red.; BAKHTIYAROV, A., tekhn. red.

[Fruit of Uzbekistan] Frukty Uzbekistana. Tashkent, Gos. izd-vo UzSSR, 1960. 6 books in fold. Abrikos, persik, sliva. 84 p. Granat, inzhir, khurma. 40 p. IAblonia, grusha, aiva. 96 p. Mindal', orekh. 26 p. Vishnia, chereshnia. 18 p. Zemlianika, malina, smorodina. 36 p. (MIRA 16:7)

(Uzbekistan--Fruit--Varieties)

APPROVED FOR RELEASE: 07/19/2001 CIA-RDP86-00513R002064830001-7"

"APPROVED FOR RELEASE: 07/19/2001 CIA-RDP86-00513R002064830001-7

ZHIVOTINSKAYA, YE. D.

PA 147T65

USSR/Medicine - Neurology Jan/Feb 49
Wounds, Gunshot

"Joint Conferences of the Neurological Clinic of the Psychoneurological Institute Imeni Bekhterev, the Department of Morphology of the Brain Institute, and the Neurological Laboratory of the Physiological Institute, Academy of Sciences USSR, Leningrad," Ye. D. Zhivotinskaya, Secy, 6½ pp

"Nevropatol i Psikhiat" Vol XVIII, No 1

Sessions convened 3 Jan, 26 Feb, 8, 15, 22 Mar, 1, 19 Apr, 5, 22 May, 22, 29 Nov, and 7, 28 Dec 47. Among reports read: Ye. Ya. Gilinskiy, "Latent

FDD 149T68

USSR/Medicine - Neurology (Contd) Jan/Feb 49

Intracranial Complications in Combined Facial and Cranial Gunshot Wounds"; S. I. Zil'berg, "Data From Neurological Studies of Cases of Hypertonia Treated by Surgery"; B. I. Shapiro, "Erroneous Diagnosis of Cerebral Hemorrhage in Cases of Cerebral Gunshot Wounds"; and L. S. Gol'din, "Electron Microscopy in Solving Problems of Brain Structure." (State Opt Inst collaborated in this work with an electron microscope constructed by Acad A. A. Lebedev and V. N. Vertsner.)

FDD 149T68

APPROVED FOR RELEASE: 07/19/2001 CIA-RDP86-00513R002064830001-7"

"APPROVED FOR RELEASE: 07/19/2001 CIA-RDP86-00513R002064830001-7

ZHIVOTINSKIY, L.A., inzhener; LEKANOV, A.G., inzhener; GITLEVICH, A.D., ~~inzhener~~

Mechanizing welding operations in shell construction. Svar. proizv. no.7:24-25 Jl '55. (MIRA 8:9)

1. Vsesoyuznyy proyektno-tekhnologicheskiy institut.
(Boilers--Welding)

APPROVED FOR RELEASE: 07/19/2001 CIA-RDP86-00513R002064830001-7"

"APPROVED FOR RELEASE: 07/19/2001 CIA-RDP86-00513R002064830001-7

ZHIVOTINSKIY, L.A., inzhener; BROVKO, I.A., inzhener

Continuous-flow process for welding joints on boilers in steam power installations. Svar.proizv. no.10:23-26 O'55. (MLRA 8:12)

1. Vsesoyuznyy proyektno-tekhnologicheskiy institut Ministerstva tyazhelogo mashinostroyeniya

(Boilers--Welding)

APPROVED FOR RELEASE: 07/19/2001 CIA-RDP86-00513R002064830001-7"

"APPROVED FOR RELEASE: 07/19/2001 CIA-RDP86-00513R002064830001-7

SOV-135-58-3-2/19

AUTHORS: Umnyagin, M.C. and Zhivotinskiy, L.A., Engineers

TITLE: Complex Mechanization and Automation of Welding Processes in Heavy Machine-Building (Kompleksnaya mekhanizatsiya i avtomatizatsiya protsessov izgotovleniya svarnykh izdeliy v tyazhelom mashinostroyenii)

PERIODICAL: Svarochnoye proizvodstvo, 1958, Nr 3, pp 4-7 (USSR)

ABSTRACT: Information is presented on the development of complex mechanization of the welding process in the heavy machine-building industry. The following installations brought into use are described and illustrated: 1) a production line for welding main beams of overhead travelling cranes (illustrated by a diagram of the entire line and photographs of its components); 2) an installation for welding spherical container bottoms; 3) an installation for electric slag welding of thick-walled drums; 4) a universal electric-slag welding installation for large size work; 5) welding manipulators; 6) an experimental installation for mechanized oxygen cutting of shaped pipes (samples of cuts made with this machine are shown in a photograph. There are 11 photographs and 1 diagram.

Card 1/2

APPROVED FOR RELEASE: 07/19/2001 CIA-RDP86-00513R002064830001-7"

"APPROVED FOR RELEASE: 07/19/2001 CIA-RDP86-00513R002064830001-7

SOV-135-58-3-2/19

Complex Mechanization and Automation of Welding Processes in Heavy Machine-Building

ASSOCIATION: Vsesoyuznyy proyektno-tekhnologicheskiy institut tyazhelogo mashinostroyeniya (All-Union Institute for Technology and Design of Heavy Machine-Building)

1. Welding--Equipment 2. Welding--Applications

Card 2/2

APPROVED FOR RELEASE: 07/19/2001 CIA-RDP86-00513R002064830001-7"

"APPROVED FOR RELEASE: 07/19/2001 CIA-RDP86-00513R002064830001-7

135-58-8-10/20

AUTHORS: Zhivotinskiy, L. A., Gitlevich, A.D. and Belov, V. Ya., Engineers

TITLE: The Mechanization of Channeled Metal Structure Assembly (Mekhanizatsiya sborki korobchatykh metallokonstruktsiy)

PERIODICAL: Svarochnoye proizvodstvo, 1958, Nr 8, pp 33 - 35 (USSR)

ABSTRACT: Information is given on mechanized welding technology and devices for the production of channeled beams of overhead travelling cranes. Movable -shape welding "gantries", especially for welding channeled beams, are described and illustrated. The gantries were devised by designers V. Ya. Belov, I. A. Brovko, F. P. Feniksov and technologists A. D. Gitlevich, N. Ye. Gusev and A. M. Sinitsyn. There are 3 photos and 4 diagrams.

Card 1/2

APPROVED FOR RELEASE: 07/19/2001 CIA-RDP86-00513R002064830001-7"

"APPROVED FOR RELEASE: 07/19/2001 CIA-RDP86-00513R002064830001-7

The Mechanization of Channeled Metal Structure Assembly 135-58-8-10/20

ASSOCIATION: Vsesoyuznyy proyektno-tekhnologicheskiy institut tyazhelogo mashinostroyeniya (VPTI) (All-Union Institute for Planning and Designing of Heavy Machinebuilding)

1. Beams--Welding--Automation

Card 2/2

APPROVED FOR RELEASE: 07/19/2001 CIA-RDP86-00513R002064830001-7"

"APPROVED FOR RELEASE: 07/19/2001 CIA-RDP86-00513R002064830001-7

SOV-135-58-10-12/19

AUTHORS: Zhivotinskiy, L.A., Gitlevich, A.D., and Belov, V.Ya., Engineers

TITLE: Installation for Assembling and Welding Overhead Travelling Cranes (Ustanovka dlya sborki i svarki kranovykh mostov)

PERIODICAL: Svarochnoye proizvodstvo, 1958, Nr 10, pp 33-35 (USSR)

ABSTRACT: In order to improve the technology of assembling overhead travelling cranes, the VPTI of Heavy Machinebuilding, together with several other plants, designed and put into practical use specialized universal installations, eliminating deficiencies which occurred in previous methods. Illustrated descriptions are presented on an installation for assembling and welding overhead cranes with a span of 10 - 32 m and bases of 3,500; 4,400; 4,900; 5,000 and 5,100 mm. In order to increase precision in adjusting the undercarriage of face beams, the Institute together with the Mogilevskiy kranovyy institut (Mogilev Cranebuilding Plant), designed a special stand, shown in fig. 3; the use

Card 1/2

APPROVED FOR RELEASE: 07/19/2001 CIA-RDP86-00513R002064830001-7"

"APPROVED FOR RELEASE: 07/19/2001 CIA-RDP86-00513R002064830001-7

SOV-135-58-10-12/19

Installation for Assembling and Welding Overhead Travelling Cranes

of bolt joints to improve the connection of main and face beams is recommended. There are 2 photos and 5 diagrams.

ASSOCIATION: VPTI tyazhelogo mashinostroyeniya (All-Union Institute of Designing and Technology for Heavy Machinebuilding)

1. Industrial plants--USSR 2. Cranes--Installation 3. Welding --Applications

Card 2/2

APPROVED FOR RELEASE: 07/19/2001 CIA-RDP86-00513R002064830001-7"

"APPROVED FOR RELEASE: 07/19/2001 CIA-RDP86-00513R002064830001-7

18(5,7)

AUTHOR: Zhivotinskiy, L.A., Engineer SOV/135-59-8-22/24

TITLE: Films on Welding

PERIODICAL: Svarochnoye proizvodstvo, 1959, Nr 8, pp 46-47 (USSR)

ABSTRACT: Recently a number of films about the introduction of modern methods for metal welding were produced by the Kiyev studio for popular-science films on order of the National Scientific-Technical Committee of the Cabinet Council of the UkrSSR and the Academy of Sciences of the UkrSSR. The following films are noticeable because of their contents and their artistic form: "Autogenous Welding"; the use of autogenous welding with several automatic and semi-automatic welders is described here. "Electric Slag-Welding"; this film treats the latest successes of this method in mechanical engineering. The film also shows a new technology of producing thick-walled containers from stampings. "Automatic Arc-Welding of Aluminum"; this film shows all the advantages of the automatic welding of aluminum over the manual method. The welding speed was

Card 1/2

APPROVED FOR RELEASE: 07/19/2001 CIA-RDP86-00513R002064830001-7"