"APPROVED FOR RELEASE: 07/16/2001 CIA-RDP86-00513R002065020002-4

ROZANOV, F.M., kandidat tekhnicheskikh nauk; KUTEPOV, O.S.; ZHUPIKOVA, D.M.; MOLCHANOV, S.V.; VASIL'YEV, F.F., retsenzent; LYUBIMOV, N.S., retsenzent.

[Structure and designing of fabrics] Stroenie i proektirovanie tkanei. Pod red. F.M.Rozanova. Moskva, Gos. nauchno-tekhn. izd-vo Ministerstva promyshlennykh tovarov shirokogo potrebleniia SSSR, 1953. 471 p. (MLRA 7:6)

(Textile industry)

APPROVED FOR RELEASE: 07/16/2001 CIA-RDP86-00513R002065020002-4"

"APPROVED FOR RELEASE: 07/16/2001 CIA-RDP86-00513R002065020002-4

FEDOROV, A. F.; KURSHEVA, N. G.; ZNUPIKOVA, T. G.

Fundamentals of the enrichment of the distiller's grain by means of ammonium lactate. Izv. vys. ucheb. zav.; pishch. tekh. no.5:92-95 '62. (MIRA 15:10)

1. Voronezhskiy tekhnologicheskiy institut, kafedra tekhnologii brodil'nykh proizvodstv.

(Fermentation) (Feeds)

APPROVED FOR RELEASE: 07/16/2001 CIA-RDP86-00513R002065020002-4"

"APPROVED FOR RELEASE: 07/16/2001 CIA-RDP86-00513R002065020002-4

FEDOROV, A.F.; ZHUPIKOVA, T.G.

Production of alcohol from reprocessed discard molasses. Spirt.prom. 29 no.1:12-13 '63. (MIRA 16:2)

1. Voronezhskiy tekhnologicheskiy institut.
(Molasses) (Distillation)

APPROVED FOR RELEASE: 07/16/2001 CIA-RDP86-00513R002065020002-4"

"APPROVED FOR RELEASE: 07/16/2001 CIA-RDP86-00513R002065020002-4

FEDOROV, A.F.; ZHUPIKOVA, T.G.

Continuous alcohol fermentation of kvass wort. Ferm. i spirt. prom. 30 no.7:17-18 '64 (MIRA 18:2)

1. Voronezhskiy tekhnologicheskiy institut.

APPROVED FOR RELEASE: 07/16/2001 CIA-RDP86-00513R002065020002-4"

"APPROVED FOR RELEASE: 07/16/2001 CIA-RDP86-00513R002065020002-4

L 13086-66 EWT(d)/EWT(m)/EWP(w)/EWA(d)/EWP(v)/T/EWP(t)/EWP(k)/EWP(h)/EWP(m)/ 88

ACC NR: AP6000838 EWP(b)/ SOURCE CODE: UR/0130/65/000/012/0030/0032 87

EWP(1)/EWA(c) MJW/JD/HM/HW 87

AUTHOR: Gostev, V. P.; Okishev, L. V.; Loyferman, M. A.; Zhupina, V. V. 16

ORG: Izhevsk Metallurgical Plant (Izhevskiy metallurgicheskiy zavod)

TITLE: Arc welding in an atmosphere of purifying gas

SOURCE: Metallurg, no. 12, 1965, 30-32

TOPIC TAGS: arc welding, welding equipment, argon, inert gas welding, rolling mill, metal forming

ABSTRACT: A semiautomatic welding rig designed to eliminate edge trimming waste in rolling mills is described. A block diagram of the rig is shown in fig. 1. The rig was used to weld Kh18N9, Kh18N9T, Kh18N10T stainless steels and alloys of the permalloy class. The ends from 10-15 separate strips were welded into rolls. The thickness of the welded strip ranged from 0.9-3.0 mm. Tabular data are given for various alloys in which recommended welding current ranges, voltage, carriage speed and volumetric flow rates (inert gas) were included. For stainless steels (1.5 mm thickness) the conditions were very similar--current from 100 to 105 amps, 65 volts, 12 to 14 m/min for the carriage

UDC: 621.771.25

Card 1/3

APPROVED FOR RELEASE: 07/16/2001 CIA-RDP86-00513R002065020002-4"

"APPROVED FOR RELEASE: 07/16/2001 CIA-RDP86-00513R002065020002-4

L 13086-66

ACC NR: AP6000838

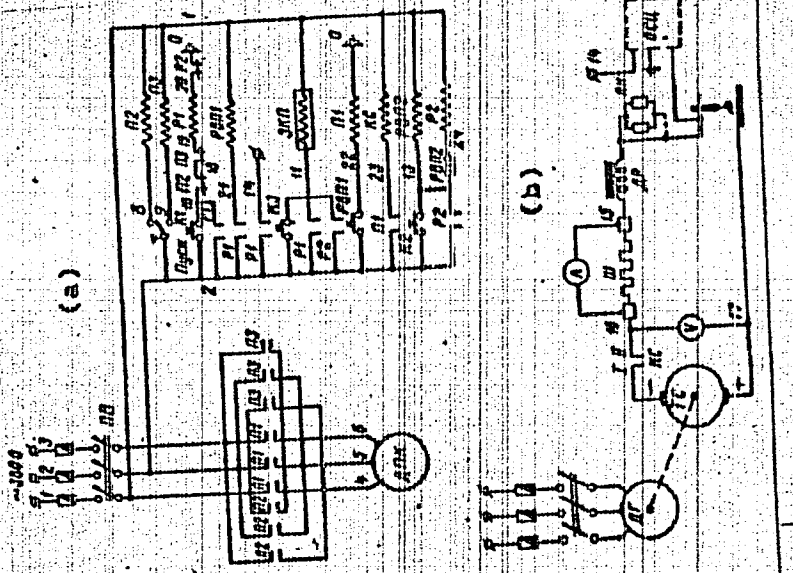

Fig. 1. Welding assembly: a--general view; b--electric diagram of the equipment; V--dc voltmeter; A--dc ammeter; DP--choke coil; DPK--carriage feed mechanism; PR--electric fuse; T--toggle switch; KC-contactor; EPK--electropneumatic valve; Sh--shunt; K3--"test gas" button; K2--"stop" button; K1--"start" button; RBP1 and RBP2--time relays; PB--switch; R1, R2 and R3--intermediate relays.

speed and 9 to 13 l/min for the inert gas flow rate. Argon was used for

Card 2/3

APPROVED FOR RELEASE: 07/16/2001 CIA-RDP86-00513R002065020002-4"

"APPROVED FOR RELEASE: 07/16/2001 CIA-RDP86-00513R002065020002-4

L 13086-66

ACC NR: AP6000838

its purifying effect on the base metal and because it promoted arc stability. The mechanical properties of the welded sections compared favorably with the unwelded portions; thus maximum backtension and rolling force could be used in subsequent rolling without breakage. Orig. art. has: 1 figure, 1 table.

SUB CODE: 13,11/ SUBM DATE: 00/ ORIG REF: 000/ OTH REF: 000

Card 3/3

APPROVED FOR RELEASE: 07/16/2001 CIA-RDP86-00513R002065020002-4"

"APPROVED FOR RELEASE: 07/16/2001 CIA-RDP86-00513R002065020002-4

24742
S/183/61/000/003/001/002
B101/B208

15.5550

AUTHORS: Moshchinskaya, N. K., Zhupiyev, M. I., Olifer, V. S.

TITLE: Study of the production process of polyethylene terephthalate

PERIODICAL: Khimicheskiye volokna, no. 3, 1961, 11 - 15

TEXT: The purpose of the present study was the development of a method of removing the glycol excess from the polycondensation product of ethylol terephthalate without using high vacuum. High-boiling solvents were applied for this purpose which form azeotropic mixtures with glycol and whose boiling point approaches the reaction temperature: diphenyl methane (boiling point 262°C), phenyl tolyl methane (279-282°C), ditolyl methane (293°C), dixylyl methane (308°C), and tolyl naphthyl methane (360°C). These compounds were synthesized by reacting formaldehyde with the corresponding hydrocarbons. Reaction temperature and the rate of distillation of glycol were regulated by bubbling oxygen-free nitrogen through the melt at different rates. The optimum temperature of polycondensation is 260-280°C. Lower temperature retards the reaction, higher temperature gives rise to destruction. Ditolyl methane and phenyl tolyl methane thus gave the best results. Tolyl naphthyl methane colors the product red. The

APPROVED FOR RELEASE: 07/16/2001 CIA-RDP86-00513R002065020002-4"

"APPROVED FOR RELEASE: 07/16/2001 CIA-RDP86-00513R002065020002-4

24742

S/183/61/000/003/001/002
B101/B208

Study of the production...

solvent added plasticized the polymer, reduced its melting point and the temperature of fiber formation. The molecular weight was determined from the viscosity of the polymer freed of the plasticizer in tricresol. The fiber-forming property was, however, tested without removing the plasticizer. Diethylol terephthalate was synthesized by heating equal parts by weight of dimethyl terephthalate and glycol to 160-190°C in nitrogen atmosphere after adding 0.02% zinc acetate (calculated for terephthalate). After distilling off the principal amount of the resulting methanol, the temperature was gradually raised to 260°C. At this temperature the excess glycol was distilled off. The resultant mixture of polyethylol terephthalate and low polyesters was mixed with the triple weight of the solvent and heated during bubbling with N_2. The following was studied: (1) influence of temperature; (2) influence of the added amount of solvent; (2) influence of the rate of distillation of the solvent and glycol upon the properties of the polyester. It was found: (1) optimum temperature 270-280°C. (2) If not the total amount of solvent is added immediately, but only 10-30% (calculated for terephthalate), and if not so much solvent is added continuously that its concentration in the reaction mass remains constant, the reaction proceeds more rapidly and is completed within

Card 2/4

APPROVED FOR RELEASE: 07/16/2001 CIA-RDP86-00513R002065020002-4"

"APPROVED FOR RELEASE: 07/16/2001 CIA-RDP86-00513R002065020002-4

3-4 hr. (3) The maximum intensity of polycondensation is attained by using phenyl tolyl methane instead of ditolyl methane, and by accelerating the distillation by intense bubbling or low vacuum. The Fig. shows the effect of the polycondensation time on the intrinsic viscosity of the polymer. The time being too much prolonged gives rise to thermal destruction and lowers the molecular weight. Plasticized polyethylene terephthalate was obtained with a molecular weight of 20,000-22,000, a melting point of 230-241°C, which contained 10-25% of the plasticizer. The molten mass was pressed by means of N_2 (0.5-2 atm) through a 0.6 mm spinneret. The best fiber formation was attained at a temperature which was 10-15°C higher than the melting point. Mention is made of A. A. Konkin, B. V. Petukhov, V. V. Korshak. There are 1 figure, 3 tables, and 12 references: 8 Soviet-bloc and 4 non-Soviet-bloc.

ASSOCIATION: Dnepropetrovskiy KhTI im. F. E. Dzerzhinskogo (Dnepropetrovsk Institute of Chemical Technology imeni F. E. Dzerzhinskiy)

APPROVED FOR RELEASE: 07/16/2001 CIA-RDP86-00513R002065020002-4"

"APPROVED FOR RELEASE: 07/16/2001 CIA-RDP86-00513R002065020002-4

MOSHCHINSKAYA, N.K.; ZHUPIYEV, L.I.; OLIFER, V.S.

Preparation of polyethylene terephthalate. Khim.volok. no.3:11-15 '61. (MIRA 14:6)

1. Dnepropetrovskiy khimiko-tekhnologicheskiy institut im. F.E. Dzerzhinskogo.
(Ethylene polymers) (Terephthalic acid)

APPROVED FOR RELEASE: 07/16/2001 CIA-RDP86-00513R002065020002-4"

"APPROVED FOR RELEASE: 07/16/2001 CIA-RDP86-00513R002065020002-4

ZHUPLEV, I.; YETEREVSKIY, A.

Agriculture

Socialist competition on the collective farm. Kolkh. proizv. No. 3, 1953.

9. Monthly List of Russian Accessions, Library of Congress, June 1953, Uncl.

APPROVED FOR RELEASE: 07/16/2001 CIA-RDP86-00513R002065020002-4"

"APPROVED FOR RELEASE: 07/16/2001 CIA-RDP86-00513R002065020002-4

ZHUPNIK, G.

On the upgrade. Mast. ugl. 7 no.8:19 Ag '58. (MIRA 11:9)

1.Nachal'nik 4-go uchastka shakhty "Komsomolets" kombinata Kuzbassugol'.
(Kuznetsk Basin--Coal mines and mining)

APPROVED FOR RELEASE: 07/16/2001 CIA-RDP86-00513R002065020002-4"

"APPROVED FOR RELEASE: 07/16/2001 CIA-RDP86-00513R002065020002-4

DARTAU, A.A.; RABINOVICH, G.N.; USSER, A.S.; YANKOVSKIY, O.A.; ZHUR, I.V.[deceased]; MEYERSON, I.G., red.

[Description of laboratory procedures in a course in electric machinery] Sbornik opisanii laboratornykh rabot po kursu elektricheskikh mashin. Leningrad. No.2.[Synchronous machines] Sinkhronnye mashiny. 1962. 73 p. (MIRA 17:5)

1. Leningrad. Elektrotekhnicheskiy institut svyazi.

APPROVED FOR RELEASE: 07/16/2001 CIA-RDP86-00513R002065020002-4"

"APPROVED FOR RELEASE: 07/16/2001 CIA-RDP86-00513R002065020002-4

ZHUR, I. YE.

ZHUR, I.Ye., pochetnyy shakhter, chlen Kommunisticheskoy partii Sovetskogo Soyuza.

Mining became creative work. Bezop.truda v prom. 1 no.11:33-34 N '57. (MIRA 10:10)

(Donets Basin--Coal mines and mining)

APPROVED FOR RELEASE: 07/16/2001 CIA-RDP86-00513R002065020002-4"

"APPROVED FOR RELEASE: 07/16/2001 CIA-RDP86-00513R002065020002-4

SMIRYAGIN, A.; YELIN, I., nauchnyy sotrudnik; KVURT, O., nauchnyy sotrudnik; ZHUR, N.

New alloy made of secondary nonferrous metals. Mor. flot 22 no.2:37-38 F '62. (MIRA 15:4)

1. Nachal'nik laboratorii tsvetnykh splavov Gosudarstvennogo nauchno-issledovatel'skogo i proyektnogo instituta obrabotki tsvetnykh metallov (for Smiryagin). 2. Laboratoriya tsvetnykh splavov Gosudarstvennogo nauchno-issledovatel'skogo i proyektnogo instituta obrabotki tsvetnykh metallov (for Yelin, Kvurt). 3. Nachal'nik otdela TSentral'nogo nauchno-issledovatel'skogo instituta morskogo flota (for Zhur).

(Nonferrous alloys)

APPROVED FOR RELEASE: 07/16/2001 CIA-RDP86-00513R002065020002-4"

"APPROVED FOR RELEASE: 07/16/2001 CIA-RDP86-00513R002065020002-4

YELIN, I.A.; ZHUR, N.V.; SHEYDIN, I.A.; GORYANSKIY, Yu.V., red. izd-va; DROZHZHINA, L.P., tekhn. red.

[Laminated and decorative materials made of wood; their properties and use in ship repairing] Plastiki i dekorativnye materialy iz drevesiny, ikh svoistva i primenenie v sudoremonte. Pod obshchei red. N.V.Zhura. Leningrad, Izd-vo "Morskoi transport," 1961. 141 p. (MIRA 15:2)
(Ships—Maintenance and repair) (Plywood)

APPROVED FOR RELEASE: 07/16/2001 CIA-RDP86-00513R002065020002-4"

"APPROVED FOR RELEASE: 07/16/2001 CIA-RDP86-00513R002065020002-4

ZHUR, N.V.

Effectiveness of industrial specialization within a ship repair yard; from practices of the Gadzhiev Shipyard. Inform.sbor. TSNIIMF no.26:4-15 '58. (MIRA 13:4)
(Ships--Maintenance and repair)
(Shipyards)

APPROVED FOR RELEASE: 07/16/2001 CIA-RDP86-00513R002065020002-4"

"APPROVED FOR RELEASE: 07/16/2001 CIA-RDP86-00513R002065020002-4

S/081/61/000/020/061/089
B102/B147

AUTHORS: Yelin, I. A., Zhur, N. V., Likver, L. A., Nunuparov, S. M.

TITLE: Protection of propeller shafts against corrosion by glass plastics based on epoxy resin

PERIODICAL: Referativnyy zhurnal. Khimiya, no. 20, 1961, 264, abstract 20I196 (Byul tekhn.-ekon. inform. M-vo morsk. flota SSSR, no. 1 (40), 1961, 32 - 45)

TEXT: The application of reinforced-glass-fabric coatings produced on the basis of epoxy resins is much cheaper than rubberizing, and reliably protects propeller-shaft surfaces against corrosive destruction. [Abstracter's note: Complete translation.]

Card 1/1

APPROVED FOR RELEASE: 07/16/2001 CIA-RDP86-00513R002065020002-4"

"APPROVED FOR RELEASE: 07/16/2001 CIA-RDP86-00513R002065020002-4

USSR/Human and Animal Physiology (Normal and Pathological). T-5
Blood Circulation. Blood Vessels.

Abs Jour : Ref Zhur - Biol., No 11, 1958, 50848

Author : Ban', N.S., Zhur, R.S.

Inst : Institute of Physiology, Academy of Sciences Belorussian SSR. (chair Normal Physiology)

Title : The Study of Interoceptive Vasal Reflexes in Patients with Gastric Fistula and Artificial Esophagus.

Orig Pub : Tr. In-ta fiziol. AN BSSR, 1956, 1, 107-111.

Abstract : Pletismograms were recorded in 7 patients 3 weeks after they were operated on because of scarry narrowing of the esophagus caused by alkaline or acidic burns. After the stomach was distented by a small rubber ball, introduced through the gastrotoma, vasoconstrictive reactions appeared, which were more pronounced when large amounts of air were

Card 1/2

APPROVED FOR RELEASE: 07/16/2001 CIA-RDP86-00513R002065020002-4"

"APPROVED FOR RELEASE: 07/16/2001 CIA-RDP86-00513R002065020002-4

USSR / Human and Animal Physiology. Nervous System. T
General Problems.

Abs Jour: Ref Zhur-Biol., No 22, 1958, 102164.

Author : Zhur, R. S.
Inst : AS BSSR.
Title : The Influences of Gustatory Receptors on Interoceptive Vascular Reflexes.

Orig Pub: Izv. AN BSSR Ser. biol. n., 1957, No 1, 137-143.

Abstract: The weak, rhythmic dilatation of the stomach (DS) of a dog by means of a balloon introduced into it (insufflation of 100-150 ml of air into the balloon) in a majority of experiments induced a dilatation of peripheral vessels which was registered plethysmographically. Strong DS (introduction of 450-500 ml of air) induced vascular constriction. 1-2 min. after irrigation of the mucosa of the

Card 1/2

APPROVED FOR RELEASE: 07/16/2001 CIA-RDP86-00513R002065020002-4"

"APPROVED FOR RELEASE: 07/16/2001 CIA-RDP86-00513R002065020002-4

ZHUR, R.S.

Effect of thermal stimulations of cutaneous receptors on interoceptive vascular reflexes. Trudy Inst. fiziol. AN BSSR 2:140-149 '58. (MIRA 12:1)

1. Laboratoriya kortiko-vistseral'noy fiziologii Instituta fiziologii AN BSSR.

(SKIN--INNERVATION) (NERVOUS SYSTEM, VASOMOTOR)
(TEMPERATURE--PHYSIOLOGICAL EFFECT)

APPROVED FOR RELEASE: 07/16/2001 CIA-RDP86-00513R002065020002-4"

"APPROVED FOR RELEASE: 07/16/2001 CIA-RDP86-00513R002065020002-4

ZHUR, R.S.

Effect of stimulation of the taste receptors on interoceptive vascular reflexes. Trudy Inst.fiziol.AN BSSR 3:111-119 '59. (MIRA 13:7)

1. Laboratoriya kortiko-vistseral'noy fiziologii Instituta fiziologii AN BSSR.

(TASTE) (BLOOD VESSELS)

APPROVED FOR RELEASE: 07/16/2001 CIA-RDP86-00513R002065020002-4"

"APPROVED FOR RELEASE: 07/16/2001 CIA-RDP86-00513R002065020002-4

ZHURA, S.K.

Supersaturation nomogram of glucose solutions. Sakh.prom. 35 no.6:63 Je '61. (MIRA 14:6)

1. Kiyevskiy politekhnicheskiy institut.
(Glucose)

APPROVED FOR RELEASE: 07/16/2001 CIA-RDP86-00513R002065020002-4"

"APPROVED FOR RELEASE: 07/16/2001 CIA-RDP86-00513R002065020002-4

RUMANIA/Cultivated Plants - Fodder. M.

Abs Jour : Ref Zhur - Biol., No 4, 1958, 15673

Author : E. Zhura

Inst : The Agronomical Institute in Timisoara

Title : The Optimum Seeding Rate for Alfalfa. (Optimal'naya norma vyseva semyan lyutserny).

Orig Pub : Probl. agric., 1957, 9, No 3, 36-42

Abstract : It has been established by experiments at the Agronomical Institute in Timisoara (1950-1953) that the alfalfa seeding rate may be lowered in arid areas when the soil has been well prepared, it is free of weeds and when the crop is well cared for; this may be up to 15 kilograms per hectare. With an increased seeding rate of alfalfa seeds up to 30 kg. the hay yield decreases at times.

Card 1/2

APPROVED FOR RELEASE: 07/16/2001 CIA-RDP86-00513R002065020002-4"

"APPROVED FOR RELEASE: 07/16/2001 CIA-RDP86-00513R002065020002-4

ZHUR, R.S., Cand Biol Sci -- (diss) "Effects from electroceptors upon interoceptive vascular reflexes." Minsk, 1958, 18 pp (Acad Sci Belorussian SSR. Inst of Biology) 100 copies (KL, 29-58, 130)

APPROVED FOR RELEASE: 07/16/2001 CIA-RDP86-00513R002065020002-4"

"APPROVED FOR RELEASE: 07/16/2001 CIA-RDP86-00513R002065020002-4

CZAJKOWSKIJ, Zbigniew [Czajkowski, Zbigniew], Mgr., inz.; ZHUR.Tadeus, dr., inz.

Experience with the belt conveyance in the Turow mines. Uhli 5 no.1:27-29 Ja '63.

1. DBFG, Wroclaw.

APPROVED FOR RELEASE: 07/16/2001 CIA-RDP86-00513R002065020002-4"

"APPROVED FOR RELEASE: 07/16/2001 CIA-RDP86-00513R002065020002-4

ZHURA, N. D.

Technology

General technology of the sacchariferous substances; (beet sugar, refined sugar, starch, molasses, and glucose industry); Dopuscheno v kachestve ucheb. posobiia dlia khimiko-tekno-logicheskikh intov pishchevoi promyshl. Moskva, Pishchepromizdat, 1951

Monthly List of Russian Accessions, Library of Congress, May 1952. UNCLASSIFIED

APPROVED FOR RELEASE: 07/16/2001 CIA-RDP86-00513R002065020002-4"

"APPROVED FOR RELEASE: 07/16/2001 CIA-RDP86-00513R002065020002-4

Zhura, K. D.

Two modifications of a scheme for simultaneous distillation of alcohol and vaporization of molasses slops. K. D. Zhura. *Trudy Kiev. Tekhnol. Inst. Pishchevoi Prom.* 1953, No. 13, 37-45; *Referat. Zhur., Khim.* 1955, No. 3091.—The 2 set-ups are described. M. Hasch

APPROVED FOR RELEASE: 07/16/2001 CIA-RDP86-00513R002065020002-4"

"APPROVED FOR RELEASE: 07/16/2001 CIA-RDP86-00513R002065020002-4

ZHURA, K.D.

ZHURA, K.D.

Effect of pH on the peptization of pectic substances. Sakh. prom. 31 no.12:53-55 D '57. (MIRA 11:1)

1. Kiyevskiy tekhnologicheskiy institut pishchevoy promyshlennosti imeni Mikoyana.
(Pectin) (Sugar--Analysis and testing)

APPROVED FOR RELEASE: 07/16/2001 CIA-RDP86-00513R002065020002-4"

"APPROVED FOR RELEASE: 07/16/2001 CIA-RDP86-00513R002065020002-4

ZHURA, K.D.

Investigating the effect of pH on the peptization of pectin substances from fresh beets. Trudy KTIPP no.17:17-20 '57. (MIRA 13:1)

(Sugar industry--By-products) (Pectin)

APPROVED FOR RELEASE: 07/16/2001 CIA-RDP86-00513R002065020002-4"

"APPROVED FOR RELEASE: 07/16/2001 CIA-RDP86-00513R002065020002-4

FEDOROV, P.D.; STABNIKOV, V.N.; GLYBIN, I.P.; BELYAVSKIY, V.V.; BOYCHENKO, N.G.; BUZYKIN, N.A.; GOLOVIN, P.V.; DEMCHUK, A.P.; ZHURA, K.D.; KORCHINSKIY, A.I.; KURILENKO, O.D.; KLIMKO, N.G.; LITVAK, I.M.; MAL'TSEV, P.M.; NIKOLAYCHUK, I.M.; NAUMOV, A.L.; POPOV, V.D.; BED'KO, F.A.; SKOBLO, D.I.; KHRISTENKO, M.M.; TSYGANKOV, P.S.; SHLIPCHENKO, Z.S.; SHVETSOV, P.D.

Gleb Mikhailovich Znamenskii; obituary. Sakh. prom. 31 no.12:68 D '57. (MIRA 11:1)

(Znamenskii, Gleb Mikhailovich, 1901-1957)

APPROVED FOR RELEASE: 07/16/2001 CIA-RDP86-00513R002065020002-4"

"APPROVED FOR RELEASE: 07/16/2001 CIA-RDP86-00513R002065020002-4

ZHURA, K.D.

Check filtration of saturation juices. Sakh. prom. 32 no.3:23-26 Mr '58. (MIRA 11:4)

(Filters and filtration) (Sugar manufacture)

APPROVED FOR RELEASE: 07/16/2001 CIA-RDP86-00513R002065020002-4"

"APPROVED FOR RELEASE: 07/16/2001 CIA-RDP86-00513R002065020002-4

ZHURA, K.D.

Effectiveness of different predefecation methods. Trudy KTIPP no.21:11-21 '59. (MIRA 14:1)

(Sugar manufacture)

APPROVED FOR RELEASE: 07/16/2001 CIA-RDP86-00513R002065020002-4"

"APPROVED FOR RELEASE: 07/16/2001 CIA-RDP86-00513R002065020002-4

ZHURA, K.D.

Effect of temperature conditions during diffusion on the filtration of purified juices. Sakh. prom. 33 no.2:27-30 F '59.
(MIRA 12:3)

1.Kiyevskiy tekhnologicheskiy institut pishchevoy promyshlennosti im. Mikoyana.
(Sugar manufacture)

APPROVED FOR RELEASE: 07/16/2001 CIA-RDP86-00513R002065020002-4"

"APPROVED FOR RELEASE: 07/16/2001 CIA-RDP86-00513R002065020002-4

ZHURA, K.D.

Filtration rate as determined by the amount of recirculating juice from the first carbonation, by the alkalinity, and by the precipitate layer. Trudy KTIPP no.22:16-20 '60. (MIRA 14:3)
(Sugar manufacture) (Filters and filtration)

APPROVED FOR RELEASE: 07/16/2001 CIA-RDP86-00513R002065020002-4"

"APPROVED FOR RELEASE: 07/16/2001 CIA-RDP86-00513R002065020002-4

ZHURA, K.D.

Effect of pectins and proteins on the filtering properties of saturated residues. Izv. vys. ucheb. zav.; pishch. tekh. no.2:85-88 '60. (MIRA 14:7)

1. Kiyevskiy tekhnologicheskiy institut pishchevoy promyshlennosti, kafedra teoreticheskoy i obshchey teplotekhniki.
(Pectin)
(Albumin)
(Filters and filtration)

APPROVED FOR RELEASE: 07/16/2001 CIA-RDP86-00513R002065020002-4"

"APPROVED FOR RELEASE: 07/16/2001 CIA-RDP86-00513R002065020002-4

ZHURA, K.D.

Secondary processes taking place during the settling of juices in thickeners. Sakh.prom. 34 no.5:16-18 My '60. (MIRA 14:5)

1. Kiyevskiy tekhnologicheskiy institut pishchevoy promyshlennosti imeni Mikoyana.

(Sugar manufacture)

APPROVED FOR RELEASE: 07/16/2001 CIA-RDP86-00513R002065020002-4"

"APPROVED FOR RELEASE: 07/16/2001 CIA-RDP86-00513R002065020002-4

ZHURA, K.D.

Behaivor of pectin in the recirculation of the first carbonation juice and the part played by this process in the production. Sakh.prom. 35 no.2:38-40 F '61. (MIRA 14:3)

1. Kiyevskiy tekhnologicheskiy institut pishchevoy promyshlennosti imeni Mikoyana.
(Pectin) (Sugar manufacutre)

APPROVED FOR RELEASE: 07/16/2001 CIA-RDP86-00513R002065020002-4"

"APPROVED FOR RELEASE: 07/16/2001 CIA-RDP86-00513R002065020002-4

ZHURA, K.D.; VIL'CHINSKIY, S.T.

Separation of the coagulate of colloidal nonsugars after preliminary defecation. Trudy KTIPP no.27:51-55 '63. (MIRA 17:5)

APPROVED FOR RELEASE: 07/16/2001 CIA-RDP86-00513R002065020002-4"

"APPROVED FOR RELEASE: 07/16/2001 CIA-RDP86-00513R002065020002-4

ZHURA, M. (Zhitkovichi, Gomel'skaya oblast')

The track is clear. Rab. i sial. 36 no. 4:19 Ap '60. (MIRA 14:5)
(Gomel' Province—Railroads—Employees)

APPROVED FOR RELEASE: 07/16/2001 CIA-RDP86-00513R002065020002-4"

"APPROVED FOR RELEASE: 07/16/2001 CIA-RDP86-00513R002065020002-4

ZHURA, M.

Industrious work. Rab. i sial. 39, no.6:11 Je '63. (MIRA 16:9)
(Buda-Koshelevo District--Stock and stockbreeding)

APPROVED FOR RELEASE: 07/16/2001 CIA-RDP86-00513R002065020002-4"

"APPROVED FOR RELEASE: 07/16/2001 CIA-RDP86-00513R002065020002-4

ZHURA, S.K.

Investigating the heat transfer of boiling wash sirups.
Sakh.prom. 34 no.1:65-67 Ja '60. (MIRA 13:5)

1. Kiyevskiy politekhnicheskiy institut.
(Starch industry--Equipment and supplies)
(Heat--Transmission)

APPROVED FOR RELEASE: 07/16/2001 CIA-RDP86-00513R002065020002-4"

"APPROVED FOR RELEASE: 07/16/2001 CIA-RDP86-00513R002065020002-4

POPOV, V.D.; ZHURA, S.K.

Thermophysical parameters of glucose solutions. Trudy KTIPP no.19: 15-22 '58. (MIRA 12:12)

(Glucose)

APPROVED FOR RELEASE: 07/16/2001 CIA-RDP86-00513R002065020002-4"

"APPROVED FOR RELEASE: 07/16/2001 CIA-RDP86-00513R002065020002-4

ZHURA, S.K.

Thermal analysis data on a glucose evaporator. Izv.vys.uchebn. zav.; pishch.tekh. no.3:104-111 '59. (MIRA 12:12)

1. Kiyevskiy ordena Lenina politekhnicheskiy institut. Kafedra teoreticheskoy i obshchey teplotekhniki.
(Evaporating appliances) (Glucose)

APPROVED FOR RELEASE: 07/16/2001 CIA-RDP86-00513R002065020002-4"

"APPROVED FOR RELEASE: 07/16/2001 CIA-RDP86-00513R002065020002-4

ZHURA, S.K.

Data on heat emission during the boiling of glucose solutions in the natural circulation area. Izv. vys. uchob. zav.; pishch. tekh. no.3:136-140 '58. (MIRA 11:9)

1. Kiyevskiy ordena Lenina politekhnicheskiy institut; Kafedra teoreticheskoy i obshchey teplotekhniki.
(Evaporating appliances) (Glucose)

APPROVED FOR RELEASE: 07/16/2001 CIA-RDP86-00513R002065020002-4"

"APPROVED FOR RELEASE: 07/16/2001 CIA-RDP86-00513R002065020002-4

ZHURA, S.K.

Investigating the heat transfer in the evaporation of second run sirup at the Beslan corn combine. Sakh.prom. 34 no.3:61-64 Mr ~~'60~~ 1960 (MIRA 13:6)

1. Kiyevskiy ordena Lenina politekhnicheskiy institut.
(Beslan--Cornstarch)
(Heat--Transmission)

APPROVED FOR RELEASE: 07/16/2001 CIA-RDP86-00513R002065020002-4"

"APPROVED FOR RELEASE: 07/16/2001 CIA-RDP86-00513R002065020002-4

ZHURA, S. K., CAND TECH SCI, "INVESTIGATION IN THE FIELD OF THE EVAPORATION OF GLUCOSE AND MOLASSES SOLUTIONS." KIEV, 1961. (MIN OF HIGHER AND SEC SPEC ED UKSSR, KIEV TECHNOL INST OF THE FOOD INDUSTRY). (KL, 3-61, 215).

APPROVED FOR RELEASE: 07/16/2001 CIA-RDP86-00513R002065020002-4"

"APPROVED FOR RELEASE: 07/16/2001 CIA-RDP86-00513R002065020002-4

POPOV, V.D.; ZHURA, S.K.

Heat conduction of glucose solutions. Trudy KTIPP no.17: 115-121 '57. (MIRA 13:1)
(Heat--Conduction) (Glucose--Thermal properties)

APPROVED FOR RELEASE: 07/16/2001 CIA-RDP86-00513R002065020002-4"

"APPROVED FOR RELEASE: 07/16/2001 CIA-RDP86-00513R002065020002-4

ZHURABASHVILI, A.D.; CHOLOKASHVILI, Ye.S.

Morphological and nctional reversibility of the neural elements of the cerebral cortex of the cat. Trudy Inst.fiziol. AN Gruz.SSR. 7:365-389 '48. (MLRA 9:8)
(CEREBRAL CORTEX)

APPROVED FOR RELEASE: 07/16/2001 CIA-RDP86-00513R002065020002-4"

"APPROVED FOR RELEASE: 07/16/2001 CIA-RDP86-00513R002065020002-4

Zhurakhov, P.K

ZHURAKHOV, P.K.

[redacted]

Group system of keeping nursing sows in winter. Zhivotnovodstvo 20: no.2:11-12 F '58. (MIRA 11:1)

1. Starshiy zootekhnik sveklosovkhoza Dubovyazovskogo sakhkombinata Sumskoy oblasti.

(Swine)

APPROVED FOR RELEASE: 07/16/2001 CIA-RDP86-00513R002065020002-4"

"APPROVED FOR RELEASE: 07/16/2001 CIA-RDP86-00513R002065020002-4

SLOBODYANIK, I.Ya.; ZHURAKOVSKAYA, L.V.

Precast mesh-reinforced ceramic products for rural construction. Stroi. mat., det. i izd. no. 2:68-72 '65 (MIRA 19:1)

1. Kiyevskiy inzhenerno-stroitel'nyy institut.

APPROVED FOR RELEASE: 07/16/2001 CIA-RDP86-00513R002065020002-4"

"APPROVED FOR RELEASE: 07/16/2001 CIA-RDP86-00513R002065020002-4

BUBLIKOV, A.V.; MENIOVICH, B.I.; ZHURAKOVSKAYA, M.D.

Intensification of the process of slurry flotation. Koks i khim. no. 5:3-9 '61. (MIRA 14:4)

1. Dneprodzerzhinskiy koksokhimicheskiy zavod.
(Flotation) (Coal preparation)

APPROVED FOR RELEASE: 07/16/2001 CIA-RDP86-00513R002065020002-4"

"APPROVED FOR RELEASE: 07/16/2001 CIA-RDP86-00513R002065020002-4

USSR / Human and Animal Morphology (Normal and Pathological). Circulatory System. Blood Vessels. S

Abs Jour : Ref Zhur - Biologiya, No 1, 1959, No. 2959

Author : Zhurakhovskaya, T. A.
Inst : Arkhangelsk Medical Institute
Title : On the Problem of the Morphology of the Internal Spermatic Artery in Females

Orig Pub : Sb. tr. Arkhang. med. in-t, 1957, vyp 17, 130-134

Abstract : On 30 female cadavers (8 children and 22 adults) it was demonstrated that the internal spermatic arteries (ISA) may originate from the abdominal portion of the aorta at three levels - high, middle and low. At the high level, the right ISA usually runs posteriorly to the inferior vena cava and crosses the renal artery anteriorly. At the middle and low levels, the artery lies anteriorly to the inferior vena cava. The right

Card 1/2

APPROVED FOR RELEASE: 07/16/2001 CIA-RDP86-00513R002065020002-4"

"APPROVED FOR RELEASE: 07/16/2001 CIA-RDP86-00513R002065020002-4

ZHURAKHOVSKAYA, T. A.

USSR / Human and Animal Morphology (Normal and Pathological). S
Cardiovascular System.

Abs Jour : Ref Zhur - Biol., No 21, 1958, No 97100

Author : Zhurakhovskaya, T.A.
Inst : Arkhangelsk Medical Institute
Title : Vascularization of Human Ovaries and Uterine Tubes.

Orig Pub : Sb. tr. Arkhang. med. in-t, 1957, vyp. 17, 108-115

Abstract : It was shown in 60 specimens from 30 cadavers of females of various ages, by the method of vessel infusion, that ovaries (O) and uterine tubes are supplied by internal spermatic (ISA) and uterine arteries (UA). Usually, ISA are divided into ovarian and tubal branches. The ovarian branch of ISA usually gives off 3-4 ramuli to O, after which it anastamoses with the ovarian branch of UA. The tubal branch of ISA lies in the mass of the mesosalpinx. Anastomoses between the branches of ISA and UA are located in the region of the mesovarium, around the angle of the uterus, in the ligament

Card 1/2

APPROVED FOR RELEASE: 07/16/2001 CIA-RDP86-00513R002065020002-4"

"APPROVED FOR RELEASE: 07/16/2001 CIA-RDP86-00513R002065020002-4

ZHURAKOVSKIY, I.A.

"Aptechnoe delo" readers' conference. Apt.delo 3 no.3:58 My-Je '54. (MLRA 7:6)

(PHARMACY)

APPROVED FOR RELEASE: 07/16/2001 CIA-RDP86-00513R002065020002-4"

"APPROVED FOR RELEASE: 07/16/2001 CIA-RDP86-00513R002065020002-4

ZHURAKOVSKIY, I.A.; UMANSKIY, Z.M.

Improvement of pharmacy work in Uzbekistan. Apt. delo 3 no.6:29-30 N-D '54. (MLRA 8:2)

1. Iz Tashentskogo farmatsevticheskogo instituta Ministerstva zdravookhraneniya Uzbekskoy SSR.
(PHARMACY,
in Russia, organiz.)

APPROVED FOR RELEASE: 07/16/2001 CIA-RDP86-00513R002065020002-4"

"APPROVED FOR RELEASE: 07/16/2001 CIA-RDP86-00513R002065020002-4

ZHURAKOVSKIY, I.A.

Premises for second and third grade pharmacies. Apt.delo 6 no.2: 59-64 Mr-Ap '57. (MIRA 10:6)

1. Iz Tashkentskogo farmatsevticheskogo instituta.
(DRUGSTORES)

APPROVED FOR RELEASE: 07/16/2001 CIA-RDP86-00513R002065020002-4"

"APPROVED FOR RELEASE: 07/16/2001 CIA-RDP86-00513R002065020002-4

25(1); 18(6) PHASE I BOOK EXPLOITATION SOV/3276

Zhurakhovskiy, Aleksandr Feofanovich

Protektornyye splavy, soderzhashchiye kal'tsiy; polucheniye splavov i issledovaniye zashchitnykh svoystv (Calcium-containing Alloys for Cathodic Protection; Production of the Alloys and Investigation of Their Protective Properties), Kiyev, Izd-vo AN Ukrainskoy SSR, 1957. 49 p. 1,000 copies printed.

Sponsoring Agency: Akademiya nauk Ukrainskoy SSR. Institut metallokeramiki i spetsial'nykh splavov.

Resp. Ed.: I. N. Frantsevich, Corresponding Member, Academy of Sciences, Ukrainian SSR; Ed. of Publishing House: O. M. Pechkovskaya; Tech. Ed.: N. P. Rakhlina.

PURPOSE: This booklet is intended for engineers concerned with the production of protector alloys.

COVERAGE: Methods of producing calcium-containing alloys for cathodic protection are described. The new alloys are stated to differ from all presently used protector alloys in that they have a depassivating property, which permits their application without the use of depolarizers in soils containing sea water or other saline solutions. Results of an investigation of the protective proper-

Card 1/2

APPROVED FOR RELEASE: 07/16/2001 CIA-RDP86-00513R002065020002-4"

"APPROVED FOR RELEASE: 07/16/2001 CIA-RDP86-00513R002065020002-4

ties of these alloys are given. During the course of the investigation a new method of producing these alloys was developed, consisting of the electrolysis of calcium chloride, using a molten complex-alloy cathode of aluminum and zinc. This method proved to be more economical than previous ones. Results of laboratory tests made on thirteen different types of protector alloys are given. In addition, test data collected under natural conditions aboard a vessel sailing the Black Sea are presented. There are 50 references, of which 45 are Soviet and 5 are English.

TABLE OF CONTENTS:

Introduction 3

Cathodic Protection of Metals from Corrosion 5

Metals and Alloys for Cathodic Protection 8

Production of Alloys and Preparation of Sacrificial Anodes Containing Calcium 13

Conclusion 45

Bibliography 48

AVAILABLE: Library of Congress (TN799.C3Z45)

VK/lsb

APPROVED FOR RELEASE: 07/16/2001 CIA-RDP86-00513R002065020002-4"

"APPROVED FOR RELEASE: 07/16/2001 CIA-RDP86-00513R002065020002-4

Zhurakhovskiy, A. F.

21-6-9/22

AUTHOR: Zhurakhovskiy, A.F. (Zhurakhovs'kyy, O.F.)

TITLE: Protective Calcium-Containing Alloys (Protectornyye splavy soderzhashchiye kal'tsiy)

PERIODICAL: Dopovidi Akademii Nauk Ukrains'koi RSR, 1957, No 6, pp 569-574 (USSR)

ABSTRACT: Optimum compositions and technology of electroytic production of new, economically advantageous and effective aluminum-zinc-calcium protective alloys have been developed. They possess an intrinsic ability of "depassivation" (restoration of activity) which considerably exceeds that of the protective alloys with a magnesium base used now in industry. Protective properties of the new alloys have been investigated in various corrosion media (sea water, water from supply lines, grounds saturated with waters). It has been established that new calcium-containing protective alloys serve 10 to 12 times as long as magnesium-containing protective alloys and reduce twice or thrice the costs of electric power consumed for the protection of metal constructions. Calcium (or rather its intermetallic compounds) plays an exceptionally important part

Card 1/2

APPROVED FOR RELEASE: 07/16/2001 CIA-RDP86-00513R002065020002-4"

"APPROVED FOR RELEASE: 07/16/2001 CIA-RDP86-00513R002065020002-4

Zhurakhovskiy, A.F.

21-6-10/22

AUTHORS: Frantsevich, I.N. (I.M.), Member of the AN Ukrainian SSR, Zhurakhovskiy, A.F. (Zhurakhovs'kyy, O.F.), Pechentkovskiy (Pechentkovs'kyy), Ye. L.

TITLE: Aluminum-Calcium and Zinc-Calcium Protectors (Alyumokal'-tsiyevyye i tsinkokal'tsiyevyye protektory)

PERIODICAL: Dopovidi Akademii Nauk Ukrains'koi RSR, 1957, No 6, pp 575-579 (USSR)

ABSTRACT: Protective alloys containing magnesium and aluminum-calcium compounds were subjected to tests under working conditions. The underwater part of the tanker "Drogobych" cruising the Black Sea, which was provided with zinc protectors during the ship construction, was examined. The results of the tests have shown the complete failure of zinc protectors due to their des-activation. Magnesium and aluminum-zinc-calcium protectors were functioning satisfactorily during the whole period of tests and ensured complete protection of the structures from corrosion in sea water. Magnesium protectors of adopted size were fully destroyed after 25 to 30 days, while the aluminum-zinc-calcium protectors were worn by only 8 to 10% after 43 to

Card 1/2

APPROVED FOR RELEASE: 07/16/2001 CIA-RDP86-00513R002065020002-4"

"APPROVED FOR RELEASE: 07/16/2001 CIA-RDP86-00513R002065020002-4

Aluminum-Calcium and Zinc-Calcium Protectors

21-6-10/22

47 days of functioning. Aluminum-zinc-calcium protectors with the intrinsic effect of depassivation (restoration of activation) can be recommended for the use to protect from the sea corrosion as the most effective and durable and the least expensive. The article contains 3 figures, 2 tables and 2 Slavic references.

ASSOCIATION: Institute of Metalloceramics and Special Alloys of the AN Ukrainian SSR (Instytut metalokeramiky ta spetsial'nykh splaviv AN URSR)

SUBMITTED: 13 March 1957

AVAILABLE: Library of Congress

Card 2/2

APPROVED FOR RELEASE: 07/16/2001 CIA-RDP86-00513R002065020002-4"

"APPROVED FOR RELEASE: 07/16/2001 CIA-RDP86-00513R002065020002-4

ZHURAKHOVSKIY, A.F., Cand Tech Sci -- (diss) "Protective alloys containing calcium." Kiev, 1958, 18 pp with ~~sketches~~ drawings (Min of Higher Education UkSSR. Kiev Order of Lenin Polytechnic Inst) 100 copies (KL, 23-58, 106)

APPROVED FOR RELEASE: 07/16/2001 CIA-RDP86-00513R002065020002-4"

"APPROVED FOR RELEASE: 07/16/2001 CIA-RDP86-00513R002065020002-4

SOV/123-59-15-59918

Translation from: Referativnyy zhurnal. Mashinostroyeniye, 1959, Nr 15, p 144 (USSR)

AUTHOR: Zhurakhovskiy, A.F.

TITLE: Protective Effects of New Calcium-Containing Anti-Corrosion Alloys When Exposed to Corrosion by Sea Water

PERIODICAL: Tr. Vses. soveshchaniya po bor'be s morsk. korroziey metallov, 1956, Baku, Azerneftneshr, 1958, pp 425 - 455

ABSTRACT: The article has not been reviewed.

Card 1/1

APPROVED FOR RELEASE: 07/16/2001 CIA-RDP86-00513R002065020002-4"

"APPROVED FOR RELEASE: 07/16/2001 CIA-RDP86-00513R002065020002-4

ACC NR: AP6009036 (A) SOURCE CODE: UR/0018/65/000/011/0024/0028

AUTHOR: Zhurakhovskiy, N. (Lieutenant Colonel)

ORG: None

TITLE: Winter combat operations by small tank units

SOURCE: Voyennyy vestnik, no. 11, 1965, 24-28

TOPIC TAGS: military tank, equipment winterization, ~~material failure~~, military action, military operation, ~~military personnel~~, arctic warfare training, training procedure, arctic climate, ~~climatic influence~~

ABSTRACT: Winter weather and snow affect tank mobility, make concealment difficult, improve visibility at night, render servicing and maintenance more difficult, and make road travel harder. Low temperatures affect engines and lubricants. Blizzards, snowfalls, and fog hamper visibility, orientation, observation, and accurate fire delivery. Hours of darkness are long. Troops must wear bulky clothes. A skilful commander will exploit these factors since they can favor concealment and surprise, and, since the enemy is frequently tied to roads, inhabited points, crossings, and junctions, tank ambushes are often possible. Precombat preparatory measures are described. Reconnaissance elements should include sappers to provide detailed terrain information. Since tank units invariably advance in column formations, during halts tank units will remain in column formation off the road. Activities

Card 1/2

APPROVED FOR RELEASE: 07/16/2001 CIA-RDP86-00513R002065020002-4"

"APPROVED FOR RELEASE: 07/16/2001 CIA-RDP86-00513R002065020002-4

L 10886-67

ACC NR: AP6009035

while at the halt are described, including setting up warming stations made from local materials and tank tarpaulins. When the temperature drops to minus 35 to 40°C engines must be warmed up periodically. Pointers concerning such facets of offensive actions as advance guards, meeting engagements, commander's reconnaissance, road clearing, and coordination between tanks and motorized rifle elements are given, and the use of tanks for defensive, and offensive, operations, as well as how security for them can be provided, is described.

SUB CODE: 15/SUBM DATE: None

Card 2/2

APPROVED FOR RELEASE: 07/16/2001 CIA-RDP86-00513R002065020002-4"

"APPROVED FOR RELEASE: 07/16/2001 CIA-RDP86-00513R002065020002-4

RUTKOVSKIY, V., inzh.; RAZUVANOV, A., inzh.; LUDCHENKO, A.; KAMENSHCHIKOV, V., inzh.; GERMAS, M., inzh.; GETSOV, G.; GAYETSKIY, A., inzh.; GEL'FER, S., inzh.; ZHURAKHOVSKIY, P., inzh.; BRUZH, R.; SEMENOV, A., inzh.

Exchange of experience. Avt. transp. 42 no. 5:51-54 My '64. (MIRA 17:5)

1. Glavnyy inzh. Tarashchanskogo avtoparka (for Ludchenko).
2. Kaluzhskiy avtoremontnyy zavod (for Semenov).

APPROVED FOR RELEASE: 07/16/2001 CIA-RDP86-00513R002065020002-4"

"APPROVED FOR RELEASE: 07/16/2001 CIA-RDP86-00513R002065020002-4

ZHURAKHOVSKIY, A.; GAYETSKIY, A.; GEL'FER, S.

Tire-retreading line. Avt.transp. 41 no.4:35-36 Ap '63. (MIRA 16:5)

(Tires, Rubber--Retreading and recapping)

APPROVED FOR RELEASE: 07/16/2001 CIA-RDP86-00513R002065020002-4"

"APPROVED FOR RELEASE: 07/16/2001 CIA-RDP86-00513R002065020002-4

ZHURAKHOVSKIY, P., inzh.; GEL'FER, S., inzh.; GAYETSKIY, A., inzh.

Machine for cutting adhesive rubber. Avt.transp. 40 no.10:31 O '62. (MIRA 15:11)

(Cutting machines)

APPROVED FOR RELEASE: 07/16/2001 CIA-RDP86-00513R002065020002-4"

"APPROVED FOR RELEASE: 07/16/2001 CIA-RDP86-00513R002065020002-4

ZHURAKHOVSKIY, P.; GEL'FER, S.; GAYETSKIY, A.

Machine for inserting vulcanization devices. Avt.transp. 40 no.4:53 Ap '62. (MIRA 15:4)
(Vulcanization--Equipment and supplies)

APPROVED FOR RELEASE: 07/16/2001 CIA-RDP86-00513R002065020002-4"

"APPROVED FOR RELEASE: 07/16/2001 CIA-RDP86-00513R002065020002-4

ZHURAKHOVSKIY, P.N.; GEL'FER, S.M.; GAYETSKIY, A.G.

Mechanization of labor consuming operations in tire repair shops. Kauch.i rez. 21 no.3:45-47 Mr '62. (MIRA 15:4)

1. Kiyevskiy shinoremontnyy zavod.
(Tires, Rubber--Repairing)

APPROVED FOR RELEASE: 07/16/2001 CIA-RDP86-00513R002065020002-4"

"APPROVED FOR RELEASE: 07/16/2001 CIA-RDP86-00513R002065020002-4

ZHURAKHOVSKIY, P.N.; GEL'FER, S.; GAYETSKIY, A.

Glue spraying unit. Avt.transp. 4 no.8:52-53 Ag '62. (MIRA 16:4)
(Gluing—Equipment and supplies)

APPROVED FOR RELEASE: 07/16/2001 CIA-RDP86-00513R002065020002-4"

"APPROVED FOR RELEASE: 07/16/2001 CIA-RDP86-00513R002065020002-4

44344

S/142/62/005/006/006/011
E192/E382

94231

AUTHORS: Rapoport, G.N. and Zhurakhovskiy, V.A.

TITLE: Theory of phasochronous devices of type "O" with helical electron beams

PERIODICAL: Izvestiya vysshikh uchebnykh zavedeniy, Radiotekhnika, v. 5, no. 6, 1962, 707 - 713

TEXT: The helical electron beam is controlled by a constant magnetic field $B_z = B_o$ and moves in a high-frequency field described by:

$$\left.\begin{aligned} \vec{E}_{\pm s} &= \vec{E}_{\pm s} A e^{i(\omega t \mp \Gamma z)} \\ \vec{H}_{\pm s} &= \vec{H}_{\pm s} A e^{i(\omega t \mp \Gamma z)} \end{aligned}\right\} \quad (1)$$

The waves of the field propagate in a uniform cylindrical waveguide in the direction $\pm z$. Γ is the "hot" propagation constant and γ is a propagation constant in the absence of an electron beam. The axis of the helix z is parallel to the axis of the waveguide.

Card 1/4

APPROVED FOR RELEASE: 07/16/2001 CIA-RDP86-00513R002065020002-4"

"APPROVED FOR RELEASE: 07/16/2001 CIA-RDP86-00513R002065020002-4

The motion of the electrons in the presence of the field is described by:

$$\left.\begin{aligned} \dot{v}_x &= -\eta E_x + \eta v_z B_y - \eta v_y (B_z + B_o) \\ \dot{v}_y &= -\eta E_y + \eta v_x (B_z + B_o) - \eta v_z B_x \end{aligned}\right\} \quad (4a)$$

$$\dot{v}_z = -\eta E_z + \eta v_y B_x - \eta v_x B_y \quad (4б)$$

The solutions of Eqs. (4a) are in the form:

$$x = \tilde{X}(z, \alpha) + x_1(z, \alpha)$$

$$y = \tilde{Y}(z, \alpha) + y_1(z, \alpha)$$

where:

$$\tilde{X}(z, \alpha) = X(t(t_o, z), t_o)$$

The magnitudes for the alternating components $\tilde{X}$ and $\tilde{Y}$ produced by the different transit times of the electrons are much higher

APPROVED FOR RELEASE: 07/16/2001 CIA-RDP86-00513R002065020002-4"

"APPROVED FOR RELEASE: 07/16/2001 CIA-RDP86-00513R002065020002-4

than the components x_1 and y_1 ; the latter can therefore be neglected. An equation for the starting current of the system is derived and it is shown that this is similar to the small signal scattering equation of a travelling-wave tube or a backward-wave tube. If the spread of the electron velocities $\Delta v_z = \vartheta$ is taken into account, the scattering equation becomes:

$$(\varkappa + ib)(\varkappa^2 + 4QC) - i = 0 \qquad (22)$$

where

$$\left(\vartheta/2Cv_{oz}\right)^2 \equiv 4QC \qquad (21)$$

The following notation is adopted in Eq. (21):

$$\left.\begin{aligned} \varepsilon/C &\equiv b \\ \delta/C &\equiv \mu \\ \mu - ib &\equiv \varkappa \end{aligned}\right\} \qquad (17)$$

where ε is the detuning parameter. Eq. (22) is similar to that

APPROVED FOR RELEASE: 07/16/2001 CIA-RDP86-00513R002065020002-4"

"APPROVED FOR RELEASE: 07/16/2001 CIA-RDP86-00513R002065020002-4

Theory of phasochronous devices S/142/62/005/006/006/011
E192/E382

of a travelling-wave tube with space charge. The effect of the variations in the magnetic field is also taken into account and it is found that 1% variation can lead to the doubling of the starting current.

ASSOCIATION: Institut radiotekhnicheskikh problem AN USSR (Institute of Radio-engineering Problems, AS UkrSSR)

SUBMITTED: April 10, 1962 (initially)
May 14, 1962 (after revision)

Card 4/4

APPROVED FOR RELEASE: 07/16/2001 CIA-RDP86-00513R002065020002-4"

"APPROVED FOR RELEASE: 07/16/2001 CIA-RDP86-00513R002065020002-4

RAPOPORT, G.N.; ZHURAKHOVSKIY, V.A.

Contribution to the theory of phasechron "O"-type devices with helical electron beams. Izv.vys.ucheb.zav.; radiotekh. 5 no.6:707-713 N-D '62. (MIRA 16:1)

1. Rekomendovana institutom radiotekhnicheskikh problem AN UkrSSR.

(Microwaves)

APPROVED FOR RELEASE: 07/16/2001 CIA-RDP86-00513R002065020002-4"

"APPROVED FOR RELEASE: 07/16/2001 CIA-RDP86-00513R002065020002-4

ZHURAKHOVSKIY, V.A.

Use of an averaging method in the integration of relativistic nonlinear equations of phasochron devices. Radiotekh. i elektron. 9 no.8:1527-1530 Ag '64. (MIRA 17:10)

APPROVED FOR RELEASE: 07/16/2001 CIA-RDP86-00513R002065020002-4"

"APPROVED FOR RELEASE: 07/16/2001 CIA-RDP86-00513R002065020002-4

ACC NR: AT6022260 SOURCE CODE: UR/0000/66/000/000/0088/0094

AUTHOR: Rapoport, G. N.; Zhurakovskiy, V. A.

ORG: none

TITLE: Interaction of helical electron beams with standing waves in a large space

SOURCE: Vsesoyuznaya nauchnaya sessiya, posvyashchennaya Dnyu radio. 22d, 1966. Sektsiya elektroniki. Doklady. Moscow, 1966, 88-94

TOPIC TAGS: SHF tube, electron interaction, electron beam

ABSTRACT: To lower the required magnetic-field strength in a SHF helical-beam smooth-resonator tube, operation at an approximate resonance of the signal frequency and a higher n-th harmonic of the electron cyclotron frequency has been suggested. The present article investigates the nonlinear interaction between the electrons in a low-density uniform helical beam and an electromagnetic field

Card 1/2

APPROVED FOR RELEASE: 07/16/2001 CIA-RDP86-00513R002065020002-4"

"APPROVED FOR RELEASE: 07/16/2001 CIA-RDP86-00513R002065020002-4

ACC NR: AT6022260

harmonically varying through the beam section; the interaction zone is situated inside the resonator. By solving a system of drift equations on a digital computer, optimal tube parameters (ensuring maximum oscillator efficiency) are found, and curves of efficiency $\eta_\perp$ vs. field parameter ν^{-1} are plotted. The final set of curves shows $\eta_\perp$ vs. I_o/I_{st}, where I_o and I_{st} are working and starting currents, respectively. These curves are intended to help in designing helical-beam SHF oscillators. Orig. art. has: 3 figures and 14 formulas.

SUB CODE: 09,29 SUBM DATE: 09Apr66 / ORIG REF: 001 / OTH REF: 002

Card 2/2

APPROVED FOR RELEASE: 07/16/2001 CIA-RDP86-00513R002065020002-4"

"APPROVED FOR RELEASE: 07/16/2001 CIA-RDP86-00513R002065020002-4

ZHURAKOVSKIY, I.A.

The 25th anniversary of the Tashkent Pharmaceutical Institute.
Med. zhur. Uzb. no.9:82-83 S '62. (MIRA 17:2)

APPROVED FOR RELEASE: 07/16/2001 CIA-RDP86-00513R002065020002-4"

"APPROVED FOR RELEASE: 07/16/2001 CIA-RDP86-00513R002065020002-4

24(7) SOV/20-122-3-11/57

AUTHORS: Vaynshteyn, E. Ye., Staryy, I. B., ~~Zhurakovskiy, Ye. A.~~

TITLE: The Fine Structure of the X-Ray Absorption K-Spectra of Titanium in Carbides (Tonkaya struktura rentgenovskikh K-spektrov pogloshcheniya titana v karbidakh)

PERIODICAL: Doklady Akademii nauk SSSR, 1958, Vol 122, Nr 3, pp 365-366 (USSR)

ABSTRACT: In the papers hitherto published, the fine structure of the X-ray K-emission spectrum of titanium, and of the L-absorption spectrum of molybdenum in carbides and in some other compounds were investigated. This paper gives data on the absorption K-spectra of titanium in alloys of the system Ti-C which contain 12 - 24 weight % of carbon. The measurements were carried out by means of a focusing X-ray tube spectrograph, and the spectra were recorded photographically. The found spectra (which are the average results of 6 independent measurements) are shown by a diagram. The same figure shows the positions of the last K_{β_3} and $K_{\beta''}$ emission lines of titanium in the same alloys, and also the position and the

Card 1/2

APPROVED FOR RELEASE: 07/16/2001 CIA-RDP86-00513R002065020002-4"

"APPROVED FOR RELEASE: 07/16/2001 CIA-RDP86-00513R002065020002-4

SOV/20-122-3-11/57

The Fine Structure of the X-Ray Absorption K-Spectra of Titanium in Carbides

shape of the long-wave absorption band. In the second diagram the X-ray absorption spectrum of titanium in carbide is compared with the spectrum of this element in dioxide (rutile). The fine structure of the absorption spectra of titanium in carbides remains constant in the entire interval of the carbon concentrations in which there is a one-phase region with a face-centered cubic lattice of metal atoms. Also the position and the shape of the long-wave band in the absorption spectrum of titanium in the investigated group of alloys remain constant. There are 2 figures and 7 references, 7 of which are Soviet.

ASSOCIATION: Institut geokhimii i analiticheskoy khimii im. V.I. Vernadskogo Akademii nauk SSSR (Institute of Geochemistry and Analytical Chemistry imeni V.I.Vernadskiy, Academy of Sciences, USSR) Odesskiy pedagogicheskiy institut im. K.D. Ushinskogo (Odessa Pedagogic Institute imeni K. D. Ushinskiy)

PRESENTED: May 19, 1958, by A. P. Vinogradov, Academician

SUBMITTED: May 15, 1958

Card 2/2

APPROVED FOR RELEASE: 07/16/2001 CIA-RDP86-00513R002065020002-4"

"APPROVED FOR RELEASE: 07/16/2001 CIA-RDP86-00513R002065020002-4

ZHURAKOVSKIY, Ye. A. Cand Tech Sci -- (diss) "X-ray spectrum study of ~~hard~~ solid compounds of certain refractory metals." Mos, 1959. 19 pp including cover (Min of Higher and Secondary Specialized Education RSFSR. Mos Order of Labor Red Banner Inst of Steel im I. V. Stalin. Chair of Physics), 120 copies (KL, 49-59, 140)

APPROVED FOR RELEASE: 07/16/2001 CIA-RDP86-00513R002065020002-4"

"APPROVED FOR RELEASE: 07/16/2001 CIA-RDP86-00513R002065020002-4

5 (4)

AUTHORS: Vaynshteyn, E. Ye., Zhurakovskiy, Ye. A. SOV/62-59-8-30/42

TITLE: The Fine Structure of the X-Ray K-Absorption Spectra of Titanium in Some Hydrides, Borides, and Silicides

PERIODICAL: Izvestiya Akademii nauk SSSR. Otdeleniye khimicheskikh nauk, 1959, Nr 8, pp 1493-1495 (USSR)

ABSTRACT: By means of the X-ray spectrum method new data have been obtained in recent times which explain questions of the inter-atomic forces prevailing in the hydrides, carbides, and nitrides of Ti, V, and Mo. In the present paper the titanium borides and silicides are investigated X-ray-spectrum analytically, in continuation of the work mentioned above. In the crystals, the silicides form embedding phases with structural elements similar to chains or layers. The borides are somewhere in between intermetallic compounds and the classical embedding phases. The boron atoms may be connected like chains, or they form dimeric layers or trimeric crystal lattice skeletons. This is due to the tendency exhibited by both elements to form clearly covalent compounds. The following borides were investigated: TiB and TiB_2; the silicides investigated were Ti_5Si_2, TiSi, $TiSi_2$. The

Card 1/3

APPROVED FOR RELEASE: 07/16/2001 CIA-RDP86-00513R002065020002-4"

"APPROVED FOR RELEASE: 07/16/2001 CIA-RDP86-00513R002065020002-4

The Fine Structure of the X-Ray K-Absorption Spectra of Titanium in Some Hydrides, Borides, and Silicides

SOV/62-59-8-30/42

compounds were prepared at the Institut metallokeramiki i spetsial'nykh splavov AN USSR (Institute of Cermets and Special Alloys of the Academy of Sciences, UkrSSR). Experimental conditions were the same as in references 5-7. The absorption spectra of pure metal, some hydrides, the compounds investigated, and TiO_2 are shown in a figure. The investigations confirmed the hypothesis that the hydrogen in the hydrides is in a state similar to metal. From the results of similar investigations of Va (Ref 7) it is concluded that this hypothesis holds generally. It was seen from the spectra of the borides and silicides that the degree and character of the participation of the 3a'-level of titanium in the formation of the metallic bond varies with the different compositions of the compounds. The greater the number of boron or silicon atoms in the compounds, the more marked is the covalent bond between the atoms. The structural elements of the metalloids are more and more weakened. There are 1 figure and 10 references, 9 of which are Soviet.

Card 2/3

APPROVED FOR RELEASE: 07/16/2001 CIA-RDP86-00513R002065020002-4"

"APPROVED FOR RELEASE: 07/16/2001 CIA-RDP86-00513R002065020002-4

The Fine Structure of the X-Ray K-Absorption Spectra of Titanium in Some Hydrides, Borides, and Silicides SOV/62-59-8-30/42

ASSOCIATION: Institut geokhimii i analiticheskoy khimii Akademii nauk SSSR (Institute of Geochemistry and Analytical Chemistry of the Academy of Sciences, USSR). Odesskiy pedagogicheskiy institut im. D. N. Ushinskogo (Odessa Pedagogical Institute imeni D. N. Ushinskiy)

SUBMITTED: February 14, 1959

Card 3/3

APPROVED FOR RELEASE: 07/16/2001 CIA-RDP86-00513R002065020002-4"

"APPROVED FOR RELEASE: 07/16/2001 CIA-RDP86-00513R002065020002-4

18(7) SOV/78-4-1-47/48

AUTHORS: Vaynshteyn, E. Ye., Zhurakovskiy, Ye. A., Staryy, I. B.

TITLE: On Some Results of the X-Ray Spectral Analysis of the Physical Nature of the Intrusion Phases (O nekotorykh rezul'tatakh rentgenospektral'nogo issledovaniya fizicheskoy prirody faz vnedreniya)

PERIODICAL: Zhurnal neorganicheskoy khimii, 1959, Vol 4, Nr 1, pp 245-246 (USSR)

ABSTRACT: The X-ray-K-absorption spectra of titanium in nitrides, in alloys of the system Ti-C with carbon contents of 9 to 24 wt %, in three hydrides with a hydrogen content of 1, 2, and more than 3 wt %, and in titanium diboride (TiB_2) were investigated. Some of the results are shown in figures 1 and 2. The X-ray absorption spectra of titanium in hydrides of various hydrogen contents have a different fine structure. The reciprocal effect of the transition metal and the nonmetal in hydrides differs qualitatively from the reciprocal effect in carbides and nitrides. The X-ray absorption spectra of titanium in titanium diboride are very complicated; this is probably caused by the complicated crystalline structure of this compound. In order

Card 1/2

APPROVED FOR RELEASE: 07/16/2001 CIA-RDP86-00513R002065020002-4"

"APPROVED FOR RELEASE: 07/16/2001 CIA-RDP86-00513R002065020002-4

SOV/78-4-1-47/48

On Some Results of the X-Ray Spectral Analysis of the Physical Nature of the Intrusion Phases

to explain the physical nature of the binding forces in the borides, further systematic investigations are required. There are 2 figures and 12 references, 7 of which are Soviet.

ASSOCIATION: Institut geokhimii i analiticheskoy khimii im. V. I. Vernadskogo Akademii nauk SSSR; Odesskiy pedagogicheskiy institut im. K. D. Ushinskogo (Institute of Geochemistry and Analytical Chemistry imeni V. I. Vernadskiy of the Academy of Sciences, USSR; Odessa Pedagogical Institute imeni K. D. Ushinskiy)

SUBMITTED: June 4, 1958

Card 2/2

APPROVED FOR RELEASE: 07/16/2001 CIA-RDP86-00513R002065020002-4"

"APPROVED FOR RELEASE: 07/16/2001 CIA-RDP86-00513R002065020002-4

SOV/20-127-3-15/71

5(4)

AUTHORS: Zhurakovskiy, Ye. A., Vaynshteyn, E. Ye.

TITLE: X-Ray K-Absorption Spectra of Vanadium in Some Hydrides, Carbides, Nitrides, and Borides

PERIODICAL: Doklady Akademii nauk SSSR, 1959, Vol 127, Nr 3, pp 534-536 (USSR)

ABSTRACT: In earlier papers (Refs 1-3) it was possible, from the analysis of X-ray K-absorption spectra, to obtain important information concerning the physical nature of the chemical interaction forces between the atoms of the above compounds with titanium, and it was also for the first time possible to obtain confirmation of the hypothesis concerning the metalization of the hydride bond, which is expressed by the filling in stages of the 3d-level of the transition elements with hydrogen electrons. The rule observed was investigated in the present paper on vanadium in the afore-mentioned compounds. The apparatus and the experimental conditions were the same as described in references 1-4. Analyses were carried out of the fine structure of the absorption of the K-boundary of the following vanadium compounds: Metallic vanadium, VaO_5, 2

Card 1/4

APPROVED FOR RELEASE: 07/16/2001 CIA-RDP86-00513R002065020002-4"

"APPROVED FOR RELEASE: 07/16/2001 CIA-RDP86-00513R002065020002-4

SOV/20-127-3-15/71

X-Ray K-Absorption Spectra of Vanadium in Some Hydrides, Carbides, Nitrides, and Borides

carbides with a content of 16 and 19% C respectively, the nitrides, borides, and diborides and the hydrides with a variation of the H-content of 0.16 - 1.25 wt%. The compounds had been tempered for 30 - 240 minutes at corresponding temperatures. The preparations were produced and analyzed at the Institut metallokeramiki i spetssplavov AN USSR (Institute of Metal Ceramics and Special Alloys of the AS, UkrSSR) by G. V. Samsonov and T. V. Dubovnik. The following results were obtained by the investigations: The fine structures of the K-absorption edge of vanadium in pentoxide, carbide, and nitride are very similar to one another. In all compounds the white line in the long-wave range remained conserved. In transition from oxides to nitrides, a decrease of the intensity was found to occur, which, according to reference 6, corresponds to the loosening of the covalent bond in the compounds. The vanadium spectrum in carbides in the case of different C-contents is independent of the metalloid content. The oxides and hydrides, on the other hand, differ considerably with respect to their spectra. If the H-content of the hydride is low, it differs only little from that of pure metal;

Card 2/4

APPROVED FOR RELEASE: 07/16/2001 CIA-RDP86-00513R002065020002-4"

"APPROVED FOR RELEASE: 07/16/2001 CIA-RDP86-00513R002065020002-4

SOV/20-127-3-15/71

X-Ray K-Absorption Spectra of Vanadium in Some Hydrides, Carbides, Nitrides, and Borides

with an increasing H-content, the maxima in the long-wave range vanish (prove for the filling up of electrons in the 3d-level of vanadium). The spectra of borides occupy an intermediate position between the carbides, nitrides, and hydrides. They are similar to those of the carbides, nitrides, and hydrides with a low H-content, in which the corresponding lines exist in the long-wave range. The diboride spectrum, on the whole, corresponds to that of hydride with an H-content >1%. The variation of the spectra in transition from carbides to hydrides is similar to the variation observed in the case of titanium (and, according to other investigations, it is also similar to those of Ni, Mo, and Cr). Thus, the general character of the rule observed appears confirmed. There are 1 figure and 8 references, 7 of which are Soviet.

ASSOCIATION: Institut geokhimii i analiticheskoy khimii im. V. I. Vernadskogo Akademii nauk SSSR (Institute of Geochemistry and Analytical Chemistry imeni V. I. Vernadskiy of the Academy of Sciences, USSR).

Card 3/4

APPROVED FOR RELEASE: 07/16/2001 CIA-RDP86-00513R002065020002-4"

"APPROVED FOR RELEASE: 07/16/2001 CIA-RDP86-00513R002065020002-4

SOV/20-127-3-15/71

X-Ray K-Absorption Spectra of Vanadium in Some Hydrides, Carbides, Nitrides, and Borides

Odesskiy pedagogicheskiy institut im. K. D. Ushinskogo
(Odessa Pedagogical Institute imeni K. D. Ushinskiy)

PRESENTED: April 13, 1959, by A. P. Vinogradov, Academician

SUBMITTED: April 8, 1959

Card 4/4

APPROVED FOR RELEASE: 07/16/2001 CIA-RDP86-00513R002065020002-4"

"APPROVED FOR RELEASE: 07/16/2001 CIA-RDP86-00513R002065020002-4

24(7)

AUTHORS: Vaynshteyn, E. Ye., Zhurakovskiy, Ye. A. SOV/20-128-4-16/65

TITLE: New Data on X-Ray Emission Spectra of Titanium in Some Hydrides, Carbides, and Nitrides

PERIODICAL: Doklady Akademii nauk SSSR, 1959, Vol 128, Nr 4, pp 695-697 (USSR)

ABSTRACT: Experimental data of earlier investigations are discussed in detail in the present paper. The authors examined carbide and nitride containing an almost stoichiometric content of non-metal; three hydrides containing 1, 2, and ~3 percents by weight of hydrogen and the original metal of high purity. For comparison they examined the X-ray spectrum of titanium in metallic state under the same conditions. V. I. Mikheyeva put the hydrides at their disposal. All the metals examined were also investigated concerning their X-ray structure. Quartz was used as reflecting crystal. The spectra were photographed in the first order of reflection on a highly sensitive fine-grained film. The experimental results are illustrated in two diagrams and permit among others the following conclusions: 1) The data ascertained by means of the method of fluorescence are in very good accordance with the results of E. Ye. Vaynshteyn

Card 1/3

APPROVED FOR RELEASE: 07/16/2001 CIA-RDP86-00513R002065020002-4"

"APPROVED FOR RELEASE: 07/16/2001 CIA-RDP86-00513R002065020002-4

and Yu. N. Vasil'yev (Ref 1) and they completely confirm them concerning the mutual position of the emission bands of titanium in carbide, nitride, and hydride. In carbide and in nitride the fine structures of the spectra are identical.
2) The structure of the $K\beta_5$-emission band of titanium in hydrides differs considerably from the structure in carbide and in nitride. The position of the longwave maximum of the $K\beta_5$-emission band of the titanium remains unchanged in the examined hydrides within the measuring accuracy. The maximum of this part of the band is in a distance of $\sim$1 ev (towards the longwave side) from the maximum of the $K\beta_5$-band of the metallic titanium. The position of the maxima within the doubly-humped $K\beta_5$-emission band of the titanium in the hydrides does not depend on the hydrogen content. The latter influences only the relative intensity of the shortwave part of the emission band compared to the longwave part. In spite of a high degree of "metallization" of the bonds in the hydrides the 1s-electrons of the hydrogen loose their "individuality"

APPROVED FOR RELEASE: 07/16/2001 CIA-RDP86-00513R002065020002-4"

"APPROVED FOR RELEASE: 07/16/2001 CIA-RDP86-00513R002065020002-4

New Data on X-Ray Emission Spectra of Titanium in Some Hydrides, Carbides, and Nitrides SOV/20-128-4-16/65

only incompletely. In previous investigations by E. Ye. Vaynshteyn and Yu. N. Vasil'yev (Ref 1) no Kβ"-line was observed in the emission spectrum of the examined hydride. But in the present paper a line of weak intensity was observed fairly clear at the longwave side of all the curves belonging to the hydrides. This line can be assumed to be the Kβ"-band of the titanium in this compound. There are 2 figures and 5 Soviet references.

ASSOCIATION: Institut geokhimii i analiticheskoy khimii im. V. I. Vernadskogo Akademii nauk SSSR (Institute of Geochemistry and Analytic Chemistry imeni V. I. Vernadskiy of the Academy of Sciences, USSR). Odesskiy pedagogicheskiy institut im. K. D. Ushinskogo (Odessa Pedagogical Institute imeni K. D. Ushinskiy)

PRESENTED: May 28, 1959, by A. P. Vinogradov, Academician

SUBMITTED: May 25, 1959

Card 3/3

APPROVED FOR RELEASE: 07/16/2001 CIA-RDP86-00513R002065020002-4"

"APPROVED FOR RELEASE: 07/16/2001 CIA-RDP86-00513R002065020002-4

24.6300
5.4130
~~24 (7)~~

68156
SOV/20-129-6-19/69

AUTHORS: Zhurakovskiy, Ye. A., Vaynshteyn, E. Ye.

TITLE: A Comparative Investigation of the Fine Structure of X-Ray Emission Bands of the Kβ Group of Titanium in a Metal and Its Compounds With Some Light Elements

PERIODICAL: Doklady Akademii nauk SSSR, 1959, Vol 129, Nr 6, pp 1269 - 1272 (USSR)

ABSTRACT: First, a survey of publications dealing with this subject is given. The authors extended these investigations by including several titanium beryllides, -borides, and -silicides; the present paper deals with the conclusions drawn from the comparison and analysis of the entire experimental material accumulated in this manner. The titanium compounds mentioned were placed at the authors' disposal by G. V. Samsonov. All X-ray emission spectra were recorded under equal conditions by means of a secondary excitation method on a Tubus spectrograph. Under the experimental conditions chosen in this case, reabsorption exerted no noticeable influence. For each compound, at least three spectrograms were taken and recorded by means of an MF-2 photometer. In all compounds investigated, the position of the

Card 1/4

APPROVED FOR RELEASE: 07/16/2001 CIA-RDP86-00513R002065020002-4"

"APPROVED FOR RELEASE: 07/16/2001 CIA-RDP86-00513R002065020002-4

68156

A Comparative Investigation of the Fine Structure of X-Ray Emission Bands of the Kβ Group of Titanium in a Metal and Its Compounds With Some Light Elements SOV/20-129-6-19/69

$K\beta_1$ line always remained unchanged within the experimental error limits. Figures 1-3 and table 1 show the experimental results obtained by the present investigation, which are compared with those obtained for metallic titanium. The width, shape, and position of the $K\beta_5$ band exhibit a sensitive reaction to the assumed bond types in the investigated compounds. The maximum of the $K\beta_5$ band of Ti is, in the case of its dioxide, shifted farthest into the long-wave range. In transition to the metal, the maximum of the $K\beta_5$ emission band of Ti shifts by 0.6 ev towards shorter waves. This shift is the greatest in the case of hydrides (4 ev). The intensity of the short-wave maximum in the hydrides depends on the hydrogen content. A possible physical interpretation has already been discussed. In several of the compounds investigated also the shape and the width of the $K\beta_5$ emission band of Ti changes; it attains its greatest width in the beryllides. A change of the character of the chemical bond in the compounds exerts an especially strong influence upon the

Card 2/4

APPROVED FOR RELEASE: 07/16/2001 CIA-RDP86-00513R002065020002-4"

"APPROVED FOR RELEASE: 07/16/2001 CIA-RDP86-00513R002065020002-4

68136

A Comparative Investigation of the Fine Structure of X-Ray Emission Bands of the Kβ Group of Titanium in a Metal and Its Compounds With Some Light Elements SOV/20-129-6-19/69

position and the relative intensity of the Kβ" satellite. This conclusion is fully confirmed by the results obtained by the present investigation. The distance Δv between the Kβ" and the $K\beta_5$ lines in the X-ray K-emission spectrum of titanium in various compounds was bound to depend on the energy difference of the valence levels of the two components of the compound. The experiment confirms such a dependence and leads to the conclusion that in compounds in which electronegativity differs by more than 0.5, there exists a simple relation between the two above-mentioned quantities. There are 4 figures, 1 table, and 19 references, 18 of which are Soviet.

ASSOCIATION: Institut geokhimii i analiticheskoy khimii im. V.I. Vernadskogo Akademii nauk SSSR (Institute of Geochemistry and Analytical Chemistry imeni V. I. Vernadskiy of the Academy of Sciences, USSR). Odesskiy pedagogicheskiy institut im. K. D. Ushinskogo (Odessa Pedagogical Institute imeni K. D. Ushinskiy)

Card 3/4

APPROVED FOR RELEASE: 07/16/2001 CIA-RDP86-00513R002065020002-4"