"APPROVED FOR RELEASE: 07/20/2001 CIA-RDP86-00513R002200730009-8

USSR

UDC: 51:621.391

FAYN, S. B., TAUGLIKH, G. L.

"Some Questions of the Structure of the System of Residual Classes in Quadratic Fields"

Tr. Vychisl. tsentra AN GruzSSR (Works of the Computing Center of the Academy of Sciences of the Georgian SSR), 1972, 11, No 1 pp 151-171 (from RZh-Kibernetika, No 8, Aug 72, Abstract No 8V501)

Translation: The paper deals with the system of residual classes in quadratic fields, and verifies the properties of sequences of the form

$$A=(\alpha_1, \alpha_2, \ldots, \alpha_{l-1}, s_j, \alpha_{l+1}, \ldots, \alpha_n),$$

where s_j runs through the system of absolutely least residues with respect to a simple modulus of m_i when j runs through the values $1, 2, \ldots, |R(m_i)|$, $R(m_i)$ is the norm of the number m_i, α_k is the figure to the base m_k representing the number A in the system of residual classes. V. Dyn'kin.

1/1

APPROVED FOR RELEASE: 07/20/2001 CIA-RDP86-00513R002200730009-8"

"APPROVED FOR RELEASE: 07/20/2001 CIA-RDP86-00513R002200730009-8

USSR UDC: 51:621.391

KIPSHIDZE, Z. Sh., KLIMIASHVILI, M. A., FAYN, S. B.

"On Polynomial Error-Correcting Codes"

Tr. Vychisl. tsentra AN GruzSSR (Works of the Computing Center of the Academy of Sciences of the Georgian SSR), 1972, 11, No 1, pp 80-86 (from RZh-Kibernetika, No 8, Aug 72, Abstract No 8V497)

Translation: By "polynomial code", the authors mean the set of solutions of the system

$$\sum_{i=1}^{n} a_{ij}\alpha_i(x) = b_j(x),$$

where $\alpha_i(x) = \sum_{s=0}^{k-1} \alpha_{is}x^s$, $i = 1, 2, \ldots, n$; $b_j(x) = \sum_{l=0}^{k-1} \beta_{jl}x^l$, $j = 1, 2, \ldots, l$.

To correct t-fold error groups, it is proposed that the coefficients a_{ij} be selected in the form

$$a_{ij} = g^{j(i-1)};\ l = 2t.$$

1/2

APPROVED FOR RELEASE: 07/20/2001 CIA-RDP86-00513R002200730009-8"

"APPROVED FOR RELEASE: 07/20/2001 CIA-RDP86-00513R002200730009-8

USSR

KIPSHIDZE, Z. Sh. et al., Tr. Vychisl. tsentra AN GruzSSR, 1972, 11, No 1, pp 80-86

A tk-fold mixed-degree asymmetric error in a polynomial code is understood to mean asymmetric distortions of the symbols of a code word which take place in conjunction with the same degrees of x in the sequence $(\alpha_1(x), \alpha_2(x), \ldots, \alpha_n(x))$ which is a solution of the initial system in no more than t cases. A method is given for constructing polynomial codes for correcting mixed-degree asymmetric errors.

In addition, a special code is proposed for correcting symmetric errors in two adjacent polynomials over the field $GF(2)$. This last code is a solution of the system of equations

$$\sum_{i=1}^{n} \alpha_i(x) \equiv a(x) \pmod 5, \quad \sum_{i=1}^{n} S_i \alpha_i(x) \equiv b(x) \pmod p,$$

where $S_i = \frac{i(i+1)}{2}$, $(p, S_i) = 1$, $p > 2(n+1)$, $i = 1, 2 \ldots$. V. Dyn'kin.

2/2

APPROVED FOR RELEASE: 07/20/2001 CIA-RDP86-00513R002200730009-8"

"APPROVED FOR RELEASE: 07/20/2001 CIA-RDP86-00513R002200730009-8

1/2 016 UNCLASSIFIED PROCESSING DATE--30OCT70

TITLE--SYNCHRONOUS EXTIRPATION OF THE RECTUM FOR CANCER -U-

AUTHOR-(03)-ALEKSANDROV, V.B., FAYN, S.N., INOYATOV, I.H.

COUNTRY OF INFO--USSR

SOURCE--KHIRURGIYA, 1970, NR 5, PP 63-67

DATE PUBLISHED--------70

SUBJECT AREAS--BIOLOGICAL AND MEDICAL SCIENCES

TOPIC TAGS--CANCER, LARGE INTESTINE, SURGERY

CONTROL MARKING--NO RESTRICTIONS

DOCUMENT CLASS--UNCLASSIFIED

PROXY REEL/FRAME--3001/1040 STEP NO--UR/0531/70/000/005/0063/0067

CIRC ACCESSION NO--AP0126678

UNCLASSIFIED

APPROVED FOR RELEASE: 07/20/2001 CIA-RDP86-00513R002200730009-8"

"APPROVED FOR RELEASE: 07/20/2001 CIA-RDP86-00513R002200730009-8

2/2 016 UNCLASSIFIED PROCESSING DATE--30OCT70

CIRC ACCESSION NO--AP0126678

ABSTRACT/EXTRACT--(U) GP-0-- ABSTRACT. DURING EXTIRPATION OF THE RECTUM FOR CANCER SYNCHRONOUSLY BY TWO SURGICAL TEAMS MOBILIZATION OF THE INTESTINE TO A GREATER MEASURE WAS PERFORMED BY THE PERINEAL TEAM OF SURGEONS. THE AUTHORS HAVE ELABORATED AND PROPOSE A DETAILED DESCRIPTION OF THE SURGICAL TECHNIQUE OF THE PERINEAL STAGE OF THE OPERATION COMBINED EXTIRPATION OF THE RECTUM. THE REFERRED TO TECHNIQUE WAS EMPLOYED IN OVER 180 PATIENTS. FACILITY: NI LABORATORII PO PROKTOLOGII S KLINIKOY.

UNCLASSIFIED

APPROVED FOR RELEASE: 07/20/2001 CIA-RDP86-00513R002200730009-8"

"APPROVED FOR RELEASE: 07/20/2001 CIA-RDP86-00513R002200730009-8

Acc. Nr: AP0047363 Ref. Code: UR0589

PRIMARY SOURCE: Vestnik Khirurgii imeni I. I. Grekova, 1970, Vol 104, Nr /, pp 82-86

LATE RESULTS OF SURGICAL TREATMENT OF THE RECTAL CANCER

Ryzhikh, A.N.; Fayn, S.N.; Inoyatov, I.M.; Boguslavskiy, L.S.

In the clinic within a 12 year period 727 patients were treated. Late results of treatment were followed up in 89.1 per cent of patients. It is concluded that best results could be obtained in abdominoperineal extirpation of the rectum (55% of patients survived for over 5 years) and abdominoanal resection of the rectum with descending of the sigmoid and preservation of the sphincter (67.7% of patients with a 5 year survival).

REEL/FRAME

19790889

APPROVED FOR RELEASE: 07/20/2001 CIA-RDP86-00513R002200730009-8"

"APPROVED FOR RELEASE: 07/20/2001 CIA-RDP86-00513R002200730009-8

USSR UDC: 658.562.012.7

BAUMBERG, I. D., KRUASHVILI, Z Ye., FAYN, V. B.

"Method of Centralized Testing of Several Objects"

USSR Author's Certificate Number 306466, filed 19/02/69, published 21/07/71 (translated from Referativnyy Zhurnal Avtomatika, Telemekhanika i Vychislitel'naya Tekhnika, No 3, 1972, Abstact No 3 A372 P)

Translation: A method is suggested for centralized testing of several objects by converting the parameters being tested with repect to their deviation from fixed limits into sequences of irregularly distributed pulses not coinciding with each other in time. In order to increase the effectiveness of the central testing device, the sequences produced are compared with the cycling sequence, and the object whose pulse sequence contains the pulse which first coincides with the cycling sequence pulse is tested.

1/1

APPROVED FOR RELEASE: 07/20/2001 CIA-RDP86-00513R002200730009-8"

"APPROVED FOR RELEASE: 07/20/2001 CIA-RDP86-00513R002200730009-8

USSR

RUBINSHTEYN, A. I., FAYN, V. M., Far Eastern State University, Vladivostok, Institute of Solid State Physics, Academy of Sciences of the USSR, Chernogolovka

"A Theory of Avalanche Ionization in Transparent Dielectrics Under the Effect of a Strong Electromagnetic Field"

Leningrad, Fizika Tverdogo Tela, Vol 15, No 2, Feb 73, pp 470-478

Abstract: The authors investigate the possibility of formation of avalanche ionization in transparent dielectrics within the framework of a theory which is not limited by the smallness of the field. An analysis is made of the energy balance of a "seed" electron in the conduction band under the effect of a light pulse. The electron energy "saturates" in a sufficiently strong field, and a maximum energy exists which is different from infinity. If the ionization energy is higher than this maximum, then as kinetic considerations will show, the probability of avalanche ionization is exponentially small. In this case the mechanism of multiphoton avalanche ionization may be effective. The authors thank I. B. Levinson for constructive criticism.

1/1

APPROVED FOR RELEASE: 07/20/2001 CIA-RDP86-00513R002200730009-8"

"APPROVED FOR RELEASE: 07/20/2001 CIA-RDP86-00513R002200730009-8

UDC: 539.2

USSR

FAYN, V. M.

"Condensation of Excitons in Pulse Space Under Optical Pumping"

Moscow, Doklady Akademii nauk SSSR, vol 204, No 2, 1972, pp 322-323

Abstract: This paper investigates excitons under laser pumping, resulting in the condensation of the excitons into pulse states different from zero. That this is possible was shown in earlier papers published by the author, et al, in the Journal of Experimental and Theoretical Physics (ZhETF, 53, 1967, p 2070; 58, 1970, p 460; 61, 1971, p 1065). The present paper theoretically investigates the steady state of exciton and photon systems in materials under the action of an electromagnetic field whose frequency is $\omega = \varepsilon(\underline{k}) + \Omega(-\underline{k})$, where $\varepsilon(\underline{k})$ is the frequency of the excitons with the wave vector $\underline{k}$, and Ω is the phonon frequency, the photon wave vector being equated to zero. Equations are written for the amplitudes of the exciton, phonon, and photon fields when the pumping is intense, and a solution is found for them which is stable in the excitation of various coherent states. The author, a member of the Institute of Solid State Physics, USSR Academy of Sciences,

1/2

APPROVED FOR RELEASE: 07/20/2001 CIA-RDP86-00513R002200730009-8"

"APPROVED FOR RELEASE: 07/20/2001 CIA-RDP86-00513R002200730009-8

UDC: 539.2

USSR

FAYN, V. M., Doklady Akademii nauk SSSR, vol 204, No 2, 1972, pp 322-323

thanks V. L. Broude and V. B. Timofeyev for their useful comments.

2/2

APPROVED FOR RELEASE: 07/20/2001 CIA-RDP86-00513R002200730009-8"

"APPROVED FOR RELEASE: 07/20/2001 CIA-RDP86-00513R002200730009-8

Acc. Nr: AP0043664 Ref. Code: UR 0056

PRIMARY SOURCE: Zhurnal Eksperimental'noy i Teoreticheskoy Fiziki, 1970, Vol 58, Nr 2, pp 460-474

ABSORPTION SATURATION IN THE ELECTRON-PHONON SPECTRUM OF CdSe

Dute, A. F.; Timofeyev, V. B.; Fayn, V. M.; Yashchin, E. G.

The dependence of the absorption coefficient in the exciton-phonon spectrum of semiconductors on intensity of the incident monochromatic radiation is analyzed theoretically. Two possible absorption saturation mechanisms are considered. One, which may be termed an integral mechanism occurs on conservation of the nonequilibrium exciton distribution in the band and when intraband relaxation is more rapid than escape of excitons from the band. The second, so-called differential saturation mechanism, is characterized by a nonequilibrium distribution of excitons in the band and takes place if the rate of exciton escape from any band point is greater than the rate of intraband relaxation. A Q-switched ruby laser was used for studying nonlinear absorption in the exciton-phonon spectrum in CdSe single crystals at 80-120° K. The integral saturation mechanism is found to occur. The mean exciton lifetimes in the band are found; in the indicated temperature range they vary between 10^{-8} and $3 \cdot 10^{-9}$ sec.

1/1 2/DI

REEL/FRAME
19770068

APPROVED FOR RELEASE: 07/20/2001 CIA-RDP86-00513R002200730009-8"

"APPROVED FOR RELEASE: 07/20/2001 CIA-RDP86-00513R002200730009-8

1/2 011 UNCLASSIFIED PROCESSING DATE--20NOV70

TITLE--AN EXPERIMENT OF FREQUENCY SOUNDING OF THE EARTH ON THE BASIS OF THE RESULTS OF A SPHERICAL ANALYSIS OF THE GEOMAGNETIC FIELD VARIATIONS

AUTHOR-(05)-BERDICHEVSKIY, M.N., VANYAN, L.L., LAGUTINSKAYA, L.P., ROTANOVA, N.M., FAYNBERG, E.B.

COUNTRY OF INFO--USSR

SOURCE--GEOMAGNETIZM I AERONOMIIA, VOL. 10, NO. 2, 1970, P. 374-377

DATE PUBLISHED--------70

SUBJECT AREAS--EARTH SCIENCES AND OCEANOGRAPHY

TOPIC TAGS--GEOMAGNETIC FIELD, RESISTIVITY, MODEL

CONTROL MARKING--NO RESTRICTIONS

DOCUMENT CLASS--UNCLASSIFIED

PROXY REEL/FRAME--1997/0163 STEP NO--UR/0203/70/010/002/0374/0377

CIRC ACCESSION NO--AP0119159

UNCLASSIFIED

APPROVED FOR RELEASE: 07/20/2001 CIA-RDP86-00513R002200730009-8"

"APPROVED FOR RELEASE: 07/20/2001 CIA-RDP86-00513R002200730009-8

2/2 011 UNCLASSIFIED PROCESSING DATE--20NOV70

CIRC ACCESSION NO--AP0119159

ABSTRACT/EXTRACT--(U) GP-0- ABSTRACT. PRELIMINARY RESULTS OF A FREQUENCY SOUNDING OF THE EARTH BASED ON DATA FROM A SPHERICAL ANALYSIS OF SQ, DST, AND 27 DAY GEOMAGNETIC FIELD VARIATIONS. TABLES INCLUDE CALCULATED VALUES OF THE THICKNESS OF THE NONCONDUCTING SHELL, THE RESISTIVITY OF THE NUCLEUS, AND THE MODULI AND ARGUMENTS OF THE RATIO OF THE OUTER AND INNER PORTIONS OF THE MAGNETIC POTENTIAL. THE RESULTS OBTAINED ARE COMPARED WITH THE PARAMETERS OF THE LAMB MODEL. FACILITY: MOSKOVSKII GOSUDARSTVENNYI UNIVERSITET. FACILITY: AKADEMIIA NAUK SSSR, INSTITUT KOSMICHESKIKH ISSLEDOVANII, MOSCOW. FACILITY: AKADEMIIA NAUK SSSR, INSTITUT ZEMNOGO MAGNETIZMA, IONOSFERY I RASPROSTRANENIIA RADIOVOLN, KRASNAYA PAKHRA, USSR. FACILITY: AKADEMIIA NAUK TURKMENSKOI SSR, INSTITUT FIZIKI ZEMLI I ATMOSFERY. ASHKHABAD, TURKMEN SSR.

UNCLASSIFIED

APPROVED FOR RELEASE: 07/20/2001 CIA-RDP86-00513R002200730009-8"

"APPROVED FOR RELEASE: 07/20/2001 CIA-RDP86-00513R002200730009-8

1/2 024 UNCLASSIFIED PROCESSING DATE--27NOV70

TITLE--POSSIBLITY OF COMPUTING THE EFFECT OF HORIZONTAL INHOMOGENEITIES DURING MAGNETIC PROFILING THROUGH THE USE OF THE INITIAL PHASE OF

AUTHOR--FAYNBERG, E.B.

COUNTRY OF INFO--USSR

SOURCE--IZVESTIYA AKADEMII NAUK SSSR. FIZIKA ZEMLI, 1970, NR 3, PP 87-89

DATE PUBLISHED--------70

SUBJECT AREAS--EARTH SCIENCES AND OCEANOGRAPHY, ASTRONOMY,ASTROPHYSICS

TOPIC TAGS--GEOMAGNETIC STORM, FIRST APPROXIMATION, SOLAR PLASMA, MAGNETOSPHERE, EARTH ROTATION

CONTROL MARKING--NO RESTRICTIONS

DOCUMENT CLASS--UNCLASSIFIED

PROXY REEL/FRAME--3007/1741 STEP NO--UR/0387/70/000/003/0087/0089

CIRC ACCESSION NO--AP0136982

UNCLASSIFIED

APPROVED FOR RELEASE: 07/20/2001 CIA-RDP86-00513R002200730009-8"

"APPROVED FOR RELEASE: 07/20/2001 CIA-RDP86-00513R002200730009-8

2/2 024 UNCLASSIFIED PROCESSING DATE--27NOV70

CIRC ACCESSION NO--AP0136982

ABSTRACT/EXTRACT--(U) GP-0- ABSTRACT. THIS IS A THEORETICAL DISCUSSION OF THE USE OF THE INITIAL PHASE OF MAGNETIC STORMS IN DEEP SOUNDING OPERATIONS IN WHICH THE EARTH IS VIEWED AS A LAYERED HOMOGENEOUS SPHERE IN AN EXTERNAL HOMOGENEOUS MAGNETIC FIELD CAUSED BY AN INTENSIVE SOLAR PLASMA STREAM INCIDENT ON THE TERRESTRIAL MAGNETOSPHERE. IN THE FIRST APPROXIMATION THE FIELD IS TAKEN TO BE COINCIDENT IN DIRECTION WITH THE AXIS OF EARTH ROTATION. FACILITY: AN TSSR; INSTITUT FIZIKI ZEMLI I ATMOSFERY.

UNCLASSIFIED

APPROVED FOR RELEASE: 07/20/2001 CIA-RDP86-00513R002200730009-8"

"APPROVED FOR RELEASE: 07/20/2001 CIA-RDP86-00513R002200730009-8

1/2 009 UNCLASSIFIED PROCESSING DATE--11SEP70

TITLE--ON THE AGE OF ERMANOV ROCK SERIES OF EASTERN SHORE OF PENZHINA GULF -U-

AUTHOR--BESPALYY, V.G., FAYNBERG, F.S., REMIZOVSKIY, R.I.

COUNTRY OF INFO--USSR

SOURCE--GEOLOGIYA I GEOFIZIKA, 1970, NR 1 (121) P 123-129

DATE PUBLISHED--------70

SUBJECT AREAS--EARTH SCIENCES AND OCEANOGRAPHY

TOPIC TAGS--ABSOLUTE AGE, EARTH CRUST AGE, PALEOMAGNETISM, GEOCHRONOLOGY

CONTROL MARKING--NO RESTRICTIONS

DOCUMENT CLASS--UNCLASSIFIED

PROXY REEL/FRAME--1986/1284 STEP NO--UR/0210/70/000/001/0123/0129

CIRC ACCESSION NO--AP0103166

UNCLASSIFIED

APPROVED FOR RELEASE: 07/20/2001 CIA-RDP86-00513R002200730009-8"

"APPROVED FOR RELEASE: 07/20/2001 CIA-RDP86-00513R002200730009-8

2/2 009 UNCLASSIFIED PROCESSING DATE--11SEP70

CIRC ACCESSION NO--AP0103166

ABSTRACT/EXTRACT--(U) GP-0- ABSTRACT. THE RESULTS OF STUDY OF SECTION OF CONTINENTAL SEDIMENTS OF ERMANOV ROCK SERIES AND UNDERLYING SEA FORMATIONS OF ETALONSK ROCK SERIES ON THE SHORE OF REKINNIK GULF (KAMCHATKA) ARE DESCRIBED IN THE PAPER. THE AUTHORS ESTABLISH THE UPPER LIMIT OF SECTION AGE, ABOUT 3 MLN YEARS (MIDDLE PLIOCENE OR LOW PARTS OF UPPER PLIOCENE) BASED UPON THE COMPARISON OF MAGNETIC POLARITY OF ERMANOV SUITE ROCKS WITH PALEOMAGNETIC GEOCHRONOLOGICAL SCALE OF PLIOCENE PLEISTOCENE.

UNCLASSIFIED

APPROVED FOR RELEASE: 07/20/2001 CIA-RDP86-00513R002200730009-8"

"APPROVED FOR RELEASE: 07/20/2001 CIA-RDP86-00513R002200730009-8

USSR UDC 519.2

FAYNBERG, M. A.

"A single-Channel Queueing System"

Tr. Mosk. in-ta inzh. zh.-d. transp. (Works of Moscow Institute of Railroad Transportation Engineers), 1971, vyp. 385, pp 110-118 (from RZh-Kibernetika, No 7, Jul 72, Abstract No 7V82)

Translation: A study was made of the stationary solution of the system of equations describing the operation of a single-channel system with generalized Erlang flow at the input, a limited queue and Erlang distribution of the servicing time.

1/1

APPROVED FOR RELEASE: 07/20/2001 CIA-RDP86-00513R002200730009-8"

"APPROVED FOR RELEASE: 07/20/2001 CIA-RDP86-00513R002200730009-8

USSR UDC 669.15:194.66.046

TUYAKHOV, V. N., SOKOLOV, K. N., LEONT'YEV, B. A., and FAYNBERG, V. B. (deceased)

"Effect of Annealing System on the Structure and Properties of 08kp Steel"

Metallurgicheskaya i Gornorudnaya Promyshlennost', No 2, 1971, pp 29-30

Abstract: The effect of the heating rate and annealing temperature on the properties of 08kp steel were studied. The heating rate had little effect on the structure and mechanical properties of the steel. Optimum annealing temperature was 700°C; at temperatures above 725°C, strength characteristics improved, but perlite structures appeared and an increase in the difference in grain size was noted. A maximum change in structure and mechanical properties was observed during the first three hours of exposure to 700°C. Increased cooling velocities after annealing increased the stability characteristics, but had no substantial effect on the size of the ferrite granules and the separation character of the structurally free iron carbide.

1/1

APPROVED FOR RELEASE: 07/20/2001 CIA-RDP86-00513R002200730009-8"

"APPROVED FOR RELEASE: 07/20/2001 CIA-RDP86-00513R002200730009-8

USSR UDC 612.384.6.01

KOLYADA, Yu. Ye., KORNIKOV, Ye. A., FAYNBERG, Ya. B.

"Creation of a Dense Electron Cloud in the Magnetic Field of an Open Trap"

Leningrad, Zhurnal Tekhnicheskoy Fiziki, Vol 43, No 10, Oct 73, pp 2170-2172

Abstract: An experimental study is made of the possibility of creating an extended high-density electron cloud in the rising magnetic field of an open magnetic trap. It is shown that by using the induction method of accelerating electrons in the magnetic field it is possible to create a long-lived electron cloud with a deep potential well. By the use of a beam with energy of up to 5 kev and current of 3 amp in a magnetic field which rises to 1600 gausses in $4 \cdot 10^{-4}$ sec an electron cloud was produced with a length of 50 cm, electron density in the axial region of $2 \cdot 10^{11} cm^{-3}$, and a 200-kv potential well. The lifetime was 250 μs. The depth of the potential well is not the limiting value. It can be considerably increased by proper selection of gun design, anode voltage, and vacuum. The authors thank L. I. Bolotin for assistance in the work.

1/1

APPROVED FOR RELEASE: 07/20/2001 CIA-RDP86-00513R002200730009-8"

"APPROVED FOR RELEASE: 07/20/2001 CIA-RDP86-00513R002200730009-8

USSR UDC 533.916

LUTSENKO, Ye. I., FAYNBERG, Ya. B., VASIL'CHUK, V. A., and SHEPELEV, N. P.

"Interaction of an Intense Electron Beam With Uniform and Nonuniform Plasmas"

Kiev, Fizika Plasmy i Problemy Upravlyayemogo Termoyadernogo Sinteza (Plasma Physics and Problems in Controlled Thermonuclear Synthesis -- collection of works) No 3, "Naukova dumka," 1972, pp 5-15

Abstract: Since the method of obtaining intense electron beams by accelerating plasma electrons with an external magnetic field is a difficult one, the authors have investigated the problem of obtaining such a beam in plasmas which are uniform or nonuniform along their lengths, and they have developed a device for attaining that aim. A diagram of the device and a description of its component parts are given, together with details of its calibration. Experiments were performed with it for both uniform and nonuniform plasmas; among their results are oscillograms of the plasma radiation and of the electron beam current at various voltages. The experiments showed that there is a limited amount of electron emission from the cold cathode, but this disappears at plasma concentrations of less than $10^{12}/cm^3$. The beam current attains a value of 1000 amp at a 40 kv level, although beams of much higher power can be obtained.

1/1

APPROVED FOR RELEASE: 07/20/2001 CIA-RDP86-00513R002200730009-8"

"APPROVED FOR RELEASE: 07/20/2001 CIA-RDP86-00513R002200730009-8

USSR UDC 533.916

LUTSENKO, Ye. I., EAYNBERG, Ya. B., VASIL'CHUK, V. A., SHEPELEV, N. P.

"Interaction of an Intense Electron Beam With a Homogeneous and Nonhomogeneous Plasma"

Fiz. plazmy i probl. upravl. termoyader. sinteza. Resp. mezhved. sb. (Plasma Physics and Problems of the Controlled Thermonuclear Fusion. Republic Interdepartmental Collection), 1972, No. 3, pp 5-15 (from RZh-Fizika, No 11, Nov 72, Abstract No 11G249)

Translation: The problem of producing an intense electron beam in a plasma at a density of $10^{11} - 10^{13}$ cm^{-3} by accelerating electrons in it with an external electric field of 500-1000 v/cm of 0.5 μsec duration produced by an induction accelerator is investigated. An electron beam with a current above 1000 a and an energy close to the applied voltage was obtained with a particle concentration in the beam of $n_1 \sim 10^{11}$ cm^{-3}. The beam is produced in the precathode layer of plasma of thickness less than 2 cm, where the entire voltage applied to it is redistributed. As the beam passes through the plasma, about 1/3 of the beam current is lost as a result of beam instability with a frequency ω_{pe}, and the energy spectrum of the electron is diffused. Stabilization of the instability is achieved by the application of a plasma that is nonhomogeneous along the length.

1/1

APPROVED FOR RELEASE: 07/20/2001 CIA-RDP86-00513R002200730009-8"

"APPROVED FOR RELEASE: 07/20/2001 CIA-RDP86-00513R002200730009-8

USSR UDC: None

TKACH, Yu. V., FAYNBERG, Ya. B., BOLOTIN, L. I., BESSARAB, Ya. Ya., GADETSKIY, N. P., MAGDA, I. I., and SIDEL'NIKOVA, A. V.

"Laser Using Plasma-Beam Discharge"

Moscow, Zhurnal Eksperimental'noy i Teoreticheskoy Fiziki, vol 62, No 5, 1972, pp 1702-1716

Abstract: Experiments to investigate the generation of stimulated radiation in the visible range of the spectrum are described. In the equipment described in this paper a pulsed electron beam with a pulse width of 90 μs at a current of 35 amp and an energy of up to 40 kev was injected into a stainless steel plasma chamber with a diameter of 110 mm and a length of three meters. At the end of the chamber a water-cooled collector was placed for dissipating the beam power, reaching a level of as much as 1.5 kW. A block diagram of the equipment and an explanation of its operation given. These experiments demonstrated the possibility of using collective processes in a high-temperature plasma for pumping gas lasers; it is asserted, in fact, that this type of pumping in a plasma-beam discharge is best for obtaining oscillation in the shortwave end of the visible range. The authors, members of the Physico-Technical Institute of the Ukrainian Academy of Sciences, express

1/2

APPROVED FOR RELEASE: 07/20/2001 CIA-RDP86-00513R002200730009-8"

"APPROVED FOR RELEASE: 07/20/2001 CIA-RDP86-00513R002200730009-8

USSR UDC: None

TKACH, Yu. V., et al, Zhurnal Eksperimental'noy i Teoreticheskoy Fiziki, vol 62, No 5, 1972, pp 1702-1716

their gratitude to V. P. Tychinskiy, V. V. Slezov, V. D. Shapiro, and V. I. Shevchenko for their comments and advice.

2/2

APPROVED FOR RELEASE: 07/20/2001 CIA-RDP86-00513R002200730009-8"

"APPROVED FOR RELEASE: 07/20/2001 CIA-RDP86-00513R002200730009-8

USSR UDC 533.916

BEREZIN, A. K., FAYNBERG, Ya. B., SHAPIRO, V. D., BEREZINA, G. P., ZEYDLITS, V. P.

"Investigating Low-Frequency Instabilities in a Plasma-Beam Discharge by Correlation Analysis"

Kiev, Fizika plasmy i problemy upravlyayemogo termoyadernogo sinteza, 1971, Naukova dumka, pp 129-133

Abstract: A method is described for determining the degree of stochasticity of the oscillations excited in a plasma-beam discharge. The method is based on measurements of the oscillation space-time correlation functions, the latter having the form $R(\underline{l},\tau) = \overline{E_z(z,t)E_z(z + \underline{l},t + \tau)}$, where E_z is the intensity of the high-frequency electric field and the horizontal line above the expression indicates averaging over z and t. The authors also describe experiments they performed to determine the degree of

1/2

APPROVED FOR RELEASE: 07/20/2001 CIA-RDP86-00513R002200730009-8"

"APPROVED FOR RELEASE: 07/20/2001 CIA-RDP86-00513R002200730009-8

USSR

BEREZIN, A. K. et al, Fizika plasmy i problemy upravlyayemogo termoyadernogo sinteza, 1971, Naukova dumka, pp 129-133

stochasticity of the excited oscillations by investigating the shape of the oscillations with movable antenna loops along the beam close to the glass chamber containing the plasma and oriented to the H_z component of the field. The autocorrelation functions, frequency spectra, and wave number spectra were obtained for the envelope and the low-frequency oscillations excited in the plasma beam discharge. A block diagram of the experimental apparatus is given.

2/2

APPROVED FOR RELEASE: 07/20/2001 CIA-RDP86-00513R002200730009-8"

"APPROVED FOR RELEASE: 07/20/2001 CIA-RDP86-00513R002200730009-8

Molecular Physics

USSR

FAYNBERG, YA. B., SHAPIRO, V. D., SHEVCHENKO, V. I., Physico-Technical Institute, Academy of Sciences, Ukrainian SSR

"Nonlinear Waves in a Relativistic Electron Beam"

Mowcow, Pis'ma v Zhurnal Eksperimental'noy i Teoreticheskoy Fiziki, Vol 11, No 8, 20 Apr 70, pp 410-413

Abstract: It is known that in stationary electron configurations a decrease of the Coulomb force of repulsion is achieved with the aid of the Lorentz force of the constriction of the currents of relativistic electrons. Because a limitation of the amplitude of a wave in plasma is connected with the effect of the Coulomb repulsion of electrons, the question naturally arises as to the possibility of the excitation of waves of great amplitude during conditions of the compensation indicated. Such a situation can occur during wave propagation along the axis of an electron beam, the particles of which are rotated in azimuth. In this case the wave of charge density leads to oscillations of the current of the particles in the beam

$$i'_{\varphi}(z-v_{\varphi}t) = -ev_0 n'(z-v_{\varphi}t)$$

[v_0 is the azimuthal velocity of the beam] and consequently to formation of a

1/3

APPROVED FOR RELEASE: 07/20/2001 CIA-RDP86-00513R002200730009-8"

"APPROVED FOR RELEASE: 07/20/2001 CIA-RDP86-00513R002200730009-8

USSR

FAYNBERG, YA. B., et al., Pis'ma v Zhurnal Eksperimental'noy i Teoreticheskoy Fiziki, Vol 11, No 8, 20 Apr 70, pp 410-413

magnetic field of the wave $H_r(z-v_\varphi t)$. The force of the pinch of the clusters connected with this magnetic field, in which the wave divides the beam

$$F_H = e/c\ v_o H_r$$

in the same manner as in the stationary case, is found to be out of phase with the Coulomb force $F_E = -eE_z$ and, with

$$v_o \leq \sqrt{c^2-v^2}\ ,$$

leads to a significant reduction of the displacement of the electrons in the field of the wave. In the process it is possible to propagate the wave in the beam with an extremely large amplitude of the electrical field without formation of an intersection of the trajectories and overturning of the wave front. This result shows the possibility of effective use of waves in relativistic beams for realization of a plasma method of acceleration proposed by Ya. B. Faynberg (Proc. Symp. CERN, 1,84,1956). For simplicity, in the present work the authors consider the case of rectangular geometry: the electron beam moves with respect to the γ-axis and is limited with respect to the x. The electron charge of the beam is assumed to be partially compensated by ions and, in equilibrium with the Coulomb

2/3

APPROVED FOR RELEASE: 07/20/2001 CIA-RDP86-00513R002200730009-8"

"APPROVED FOR RELEASE: 07/20/2001 CIA-RDP86-00513R002200730009-8

USSR

FAYNBERG, YA. B., et al., Pis'ma v Zhurnal Eksperimental'noy i Teoreticheskoy Fiziki, Vol 11, No 8, 20 Apr 70, pp 410-413

repulsion force acting on the electrons $-eE_x$, is compensated by the magnetic force $- e/c\ v_0 H_z$, where $H_z(x)$ is the magnetic field created by the electron current. The wave originating in such an electron beam is described with the aid of an ordinary hydrodynamical system of equations. Curves are shown for the dispersion dependences for waves in an azimuthal electron beam. The continuous curves pertain to the case of small amplitudes ($\lambda \rightarrow 1$); the dotted curves indicate the case of the maximum possible amplitude determined by a formula developed in the work. 1 fig. 5 ref. Received by editors, 9 March 70.

3/3

APPROVED FOR RELEASE: 07/20/2001 CIA-RDP86-00513R002200730009-8"

"APPROVED FOR RELEASE: 07/20/2001 CIA-RDP86-00513R002200730009-8

USSR UDC 621.373.826

PAK, G. T., PETROV, A. I., FAYNBOYM, YE. G., CHERNOUSOV, N. P., SHVEYKIN, V. I., YASHUMOV, I. V.

"Internal Parameters of Injection Lasers at 300° K"

V sb. Kvant. elektronika (Quantum Electronics-- collection of works), Moscow, No 5, 1971, pp 99-101 (from RZh-Radiotekhnika, No 1, 1972, Abstract No 1D350)

Translation: The results of experimental studies of the basic parameters of the active zone of injection lasers based on diffusion and epitaxial p-n-transitions and heterotransitions in the GaAs-AlAs system are described. It is demonstrated that heterolasers with two-sided limitation have better characteristics: the specific amplification coefficient is 10^{-2} cm/amp, the inversion current density is 2.1 kiloamps/cm^2, and the losses are 26 cm^{-1}. There is 1 illustration and a 6-entry bibliography.

1/1

APPROVED FOR RELEASE: 07/20/2001 CIA-RDP86-00513R002200730009-8"

"APPROVED FOR RELEASE: 07/20/2001 CIA-RDP86-00513R002200730009-8

6

USSR

UDC 621.382.002

GAYSINSKIY, V.B., GAL'CHINETSKIY, L.P., GRIGOR'YEV, A.N., KOSHKIN, V.M., KULIK, V.N., NIKOLAYCHUK, L.I., PIVOVAR, L.I., RAYSKIN, E.K., SYSOYEV, L.A., FAYNER, M.SH.

"Ion Implantation Of Single Crystals Of Cadmium Sulfide"

V sb. Monokristally i tekhnika (Single Crystals And Technology--Collection Of Works), Issue 6, Khar'kov, 1972, pp 109-112 (from RZh:Elektronika i yeye primeneniye, No 11, Nov 1972, Abstract No 11B459)

Translation: The effect was studied of the dose and energy of irradiation by lithium ions in the temperature range from minus 70 to plus 180° C on the conductivity of cadmium sulfide. A divergence is found between the theoretically calculated value of the depth of penetration of lithium ions and the experimental results. These divergences are accounted for by the marked differences of the structures of the surface layer and the volume of the crystal. With the aid of ion implantation piezosemiconductor transducers were produced based on a high-resistance layer in CdS. Summary.

1/1

APPROVED FOR RELEASE: 07/20/2001 CIA-RDP86-00513R002200730009-8"

"APPROVED FOR RELEASE: 07/20/2001 CIA-RDP86-00513R002200730009-8

USSR

UDC 621.382.9

OBUKHOVSKIY, Ya. A., FAYNER, M. Sh., SYSOYEV, L. A., and GRIGORENKO, G. D.

"Effect of the Parameters of the Source Material of Cadmium Sulphide on the Efficiency of Operation of Piezotransducers Using a Diffused Layer"

V sb. Monokristally i tekhnika (Monocrystals and Technics -- Collection of Works), Issue 3, Khar'kov, 1970, pp 207-210 (from RZh-Elektronika i yeye primeneniye, No 7, July 1971, Abstract No 7B454)

Translation: The dependence is found of the efficiency of operation of piezotransducers using a diffused layer in CdS, operating in the 30-300 MHz frequency range, on the concentration of impurities in source material of various brands and the concentration of the donor impurities Al, In, Ca, introducable in the process of growth. It is shown that annealing of the source material of CdS and the introduction of Al in a concentration $\sim 5 \times 10^{-2}$ percent by weight during growth increases the efficiency of operation of the piezoconverter by 20-30 db. Summary.

1/1

APPROVED FOR RELEASE: 07/20/2001 CIA-RDP86-00513R002200730009-8"

"APPROVED FOR RELEASE: 07/20/2001 CIA-RDP86-00513R002200730009-8

USSR UDC 621.382.9

OBUKHOVSKIY, YA.A., SYSOYEV, L.A., FAYNER, M.SH.

"Use Of Melted Monocrystals Of Cadmium Sulfide For Ultrasonic Transducers"

V sb. Monokristally i tekhnika (Monocrystals And Technology--Collection Of Works), Issue 1, Khar'kov, 1970, pp 24-26 (from RZh--Elektronika i yeye primeneniye, No 4, April 1971, Abstract No 4B385)

Translation: A method is described for producing a piezotransducer, using the diffusion of lithium. The distinctive characteristic of the method described is its simplicity and the high stability of the parameters of the transducers. Summary.

1/1

APPROVED FOR RELEASE: 07/20/2001 CIA-RDP86-00513R002200730009-8"

"APPROVED FOR RELEASE: 07/20/2001 CIA-RDP86-00513R002200730009-8

USSR UDC: 539.14.3

SOLOV'YEV, V. G., FAYNER, U. M., Joint Institute of Nuclear Research

"Irrotational States of Odd-Mass Deformed Nuclei in the Region $179 \leq A \leq 185$"

Moscow, Izv. AN SSSR, Ser. Fiz., Mat. XXII Yezhegod. soveshch. po yaderm. spektroskopii i strukture atom. yadra, Kiev, 25-28 yanv. 1972, Vol 36, No 4, Apr 72, pp 698-705

Abstract: The paper presents the results of calculation of the irrotational states of odd-mass deformed nuclei in the region $179 \leq A \leq 185$. Since the behavior of one-particle energies and wave functions of the Saxon-Woods potential depends on the mass number, the region of nuclei with $150 < A < 190$ is broken up into four zones: $A = 155$, 165, 173, and 181, and the one-particle energies and wave functions for the corresponding zone are assumed in calculations. In this paper the energies and wave functions for zone $A = 181$ computed by Gareyev et al. (Soobshch. OIYaI, P4-4259) are used in the method proposed by Malov et al. (IAN SSSR, Ser. fiz., v. 33, p 1244; v. 35, p 747). The tabulated results agree satisfactorily with experimental data and can be used for computing various characteristics of deformed nuclei. In conclusion, the authors thank L. A. Malov, S. I. Fedotov, and Kh. Shtrusnyy for assistance and discussion.

1/1

APPROVED FOR RELEASE: 07/20/2001 CIA-RDP86-00513R002200730009-8"

"APPROVED FOR RELEASE: 07/20/2001 CIA-RDP86-00513R002200730009-8

1/2 016 UNCLASSIFIED PROCESSING DATE--02OCT70

TITLE--STUDY OF SURFACE PHENOMENA IN POLYMERS PROPERTIES OF MONOMOLECULAR OLIGOMER LAYERS -U-

AUTHOR-(03)-FAYNERMAN, A.YE., LIPATOV, YU.S., MAYSTRUK, V.K.

F

COUNTRY OF INFO--USSR

SOURCE--KOLLOIDNYY ZHURNAL, 1970, VOL 32, NR 2, PP 282-287

DATE PUBLISHED--------70

SUBJECT AREAS--CHEMISTRY

TOPIC TAGS--MOLECULAR WEIGHT, POLYMER STRUCTURE, OLIGOMER, ETHYLENE GLYCOL, ADIPATE, ISOTHERM

CONTROL MARKING--NO RESTRICTIONS

DOCUMENT CLASS--UNCLASSIFIED

PROXY REEL/FRAME--1992/1550 STEP NO--UR/0069/70/032/002/0282/0287

CIRC ACCESSION NO--AP0112544

UNCLASSIFIED

APPROVED FOR RELEASE: 07/20/2001 CIA-RDP86-00513R002200730009-8"

"APPROVED FOR RELEASE: 07/20/2001 CIA-RDP86-00513R002200730009-8

2/2 016 UNCLASSIFIED PROCESSING DATE--02OCT70

CIRC ACCESSION NO--AP0112544

ABSTRACT/EXTRACT--(U) GP-0- ABSTRACT. THE COMPRESSION ISOTHERMS OF MONOMOLECULAR LAYERS OF OLIGODIETHYLENEGLYCOL ADIPATES OF VARYING MOLECULAR WEIGHT HAVE BEEN STUDIED ON DIFFERENT SUBSTRATES. ON A WATER SUBSTRATE INCREASE OF MOLECULAR WEIGHT INVOLVES CHANGES IN THE PACKING DENSITY AND CHAIN FLEXIBILITY AS WELL AS FORMATION OF MOLECULAR AGGREGATES OF SHORT CHAINS. ON SUBSTRATES WITH GREATER SURFACE ENERGIES THAN THAT OF WATER THESE AGGREGATES BREAK UP AND THE CHAIN FLEXIBILITY IN MONOLAYERS INCREASES. IN THE TEMPERATURE RANGE 15 DIVIDED BY 30DEGREESC THE STRUCTURE OF MONOLAYERS CHANGES INSIGNIFICANTLY.

UNCLASSIFIED

APPROVED FOR RELEASE: 07/20/2001 CIA-RDP86-00513R002200730009-8"

"APPROVED FOR RELEASE: 07/20/2001 CIA-RDP86-00513R002200730009-8

1/2 014 UNCLASSIFIED PROCESSING DATE--27NOV70

TITLE--DISTRIBUTION FUNCTION FOR POLYCONDENSATES -U-

AUTHOR--FAYNERMAN, A.E.

F

COUNTRY OF INFO--USSR

SOURCE--FASERFORSCH. TEXTILTECH. 1970, 21(5), 215-17

DATE PUBLISHED--------70

SUBJECT AREAS--CHEMISTRY, MATERIALS

TOPIC TAGS--DISTRIBUTION FUNCTION, MOLECULAR WEIGHT, POLYCONDENSATION, NYLON

CONTROL MARKING--NO RESTRICTIONS

DOCUMENT CLASS--UNCLASSIFIED

PROXY REEL/FRAME--3007/0931 STEP NO--GE/0083/70/021/005/0215/0217

CIRC ACCESSION NO--AP0136362

UNCLASSIFIED

APPROVED FOR RELEASE: 07/20/2001 CIA-RDP86-00513R002200730009-8"

"APPROVED FOR RELEASE: 07/20/2001 CIA-RDP86-00513R002200730009-8

2/2 014 UNCLASSIFIED PROCESSING DATE--27NOV70

CIRC ACCESSION NO--AP0136362

ABSTRACT/EXTRACT--(U) GP-0- ABSTRACT. EQUATIONS BASED ON THE FLORY DISTRIBUTION (P. J. FLORY, 1936) ARE SUITABLE FOR CALCG. DISTRIBUTION FUNCTIONS OF POLYCONDENSATES, E.G. FOR CALCG. THE MOL. WT. DISTRIBUTION OF NYLON 66. FACILITY: INST. CHEM. HOCHMOL. VERBINDUNGEN, KIEV, USSR.

UNCLASSIFIED

APPROVED FOR RELEASE: 07/20/2001 CIA-RDP86-00513R002200730009-8"

"APPROVED FOR RELEASE: 07/20/2001 CIA-RDP86-00513R002200730009-8

1/2 021 UNCLASSIFIED PROCESSING DATE--23OCT70

TITLE--CORROSION OF CARBON STEEL IN ELECTROLYTE AIR AND ELECTROLYTE BENZENE SYSTEMS -U-

AUTHOR--FAYNGOLD, L.L.

COUNTRY OF INFO--USSR

SOURCE--ZASHCH. METAL. 1970, 6(1), 44-6

DATE PUBLISHED-------70

SUBJECT AREAS--MATERIALS

TOPIC TAGS--STEEL CORROSION, CARBON STEEL, BENZENE, AIR, HYDROCHLORIC ACID, SULFUR ACID, SODIUM SULFATE, ELECTROLYTIC SOLUTION

CONTROL MARKING--NO RESTRICTIONS

DOCUMENT CLASS--UNCLASSIFIED

PROXY REEL/FRAME--1980/1196 STEP NO--UR/0365/70/006/001/0044/0046

CIRC ACCESSION NO--AP0049374

UNCLASSIFIED

APPROVED FOR RELEASE: 07/20/2001 CIA-RDP86-00513R002200730009-8"

"APPROVED FOR RELEASE: 07/20/2001 CIA-RDP86-00513R002200730009-8

2/2 021 UNCLASSIFIED PROCESSING DATE--23OCT70

CIRC ACCESSION NO--AP0049374

ABSTRACT/EXTRACT--(U) GP-0- ABSTRACT. LOCAL CORROSION AT THE PHASE BOUNDARY ELECTROLYTE AIR AND ELECTROLYTE C SUB6 H SUB6 WAS STUDIED WITH C STEEL SAMPLES. SOLNS. OF DIFFERENT CONCNS. OF HCL, H SUB2 SO SUB4, AND NA SUB2 SO SUB4 WERE USED AS ELECTROLYTES. TESTS WERE AT ROOM TEMP. AND AT 60DEGREES FOR 24 HR. THE DEPTH OF GROOVES DEVELOPED BY CORROSION AT THE PHASE BOUNDARIES WAS DETD. BY MICROSCOPIC MEASUREMENTS. THE RELATIONS BETWEEN THE DEPTH OF THE FORMED GROOVES AND THE TYPE, CONCN., ELEC. COND., AND TEMP. OF THE ELECTROLYTE ARE PRESENTED.

UNCLASSIFIED

APPROVED FOR RELEASE: 07/20/2001 CIA-RDP86-00513R002200730009-8"

"APPROVED FOR RELEASE: 07/20/2001 CIA-RDP86-00513R002200730009-8

USSR UDC: 619.21

MALEVICH, T. L., FAYNGOL'D, V. I.

"Prediction of One Class of Nonstationary Process"

Sluchayn. protsessy i smezhn. vopr. Ch. 2 (Random Processes and Related Problems. Part 2), Tashkent, "Fan", 1971, pp 52-62 (from RZh-Kibernetika, No 7, Jul 71, Abstract No 7V143)

Translation: The authors consider the problem of linear prediction for the process

$$y(t) = \sum_{\tau=-T_1}^{T_1} a(t,\tau)\, x(\tau)$$

with discrete time $t, |t|<\infty$, where $x(\tau)$ is a random process which is stationary in a broad sense, $a(t,\tau)$ is a non-random function. g. Molchan.

1/1

APPROVED FOR RELEASE: 07/20/2001 CIA-RDP86-00513R002200730009-8"

"APPROVED FOR RELEASE: 07/20/2001 CIA-RDP86-00513R002200730009-8

USSR UDC: 620.179.14

KLYUYEV, V. V., and FAYNGOYZ, M. L., Scientific Research Institute of Introscopy

"Nondestructive Inspection of Current- Conductive Articles by Flow-Through Transducers by the Constant-Field Method"

Sverdlovsk, Defektoskopiya, No 2, 1972, pp 27-31

Abstract: An analysis is made of the interrelationship of the inserted vector potential of a cylindrical coil, fed by alternating current, with the rate of motion of an inspected current-conductive article, coaxial with the coil. When the article is situated within the coil, there is the analogy of a flow-through external transducer; when the coil is situated within the article, there is the analogy of a flow-through external transducer. The value of the vector potential was determined for a point at the distance Z from the plane of the current coil, in a direction opposite to the velocity along the radius of the current coil. The analysis is conducted on the basis of exact computation of improper integrals. 2 figures. 1 table. 1 reference.

1/1

APPROVED FOR RELEASE: 07/20/2001 CIA-RDP86-00513R002200730009-8"

"APPROVED FOR RELEASE: 07/20/2001 CIA-RDP86-00513R002200730009-8

USSR

UDC 532.516

GOLOVIN, V. M., FAYNITSKIY, Yu. L.

"Transverse Flow Over a Circular Cylinder Undergoing Rotational Oscillations"

Tr. Kuybyshev. aviats. in-t (Works of Kuybyshev Aviation Institute), 1971, No. 35, pp 10-14 (from RZh-Mekhanika, No 8, Aug 72, Abstract No 8B723)

Translation: The problem of the transverse flow of a viscous incompressible liquid over a circular cylinder undergoing harmonic oscillations around the axis with an arbitrary frequency is discussed. A solution of the nonstationary equations of motion and energy described in the boundary layer approximation is sought by a numerical method. An explicit finite-difference scheme approximating the initial equations is given. The problem of obtaining boundary conditions at the critical point is considered. The stability of the finite-difference scheme is calculated. Calculations of the tangential stress on the surface of the cylinder and the Nusselt number are given for different values of the oscillation frequency of the cylinder. The results are analyzed. V. D. Vilenskiy.

1/1

APPROVED FOR RELEASE: 07/20/2001 CIA-RDP86-00513R002200730009-8"

"APPROVED FOR RELEASE: 07/20/2001 CIA-RDP86-00513R002200730009-8

MEDICINE

FAYNSHMIDT, A. B.

COLEEN

SO: JPRS 55015
25 JAN 72

UDC: 61:519.24(049.3)

NEW BOOK DEALS WITH STATISTICAL ANALYSES IN MEDICINE

[Book* review by Docent A.B. Faynshmidt (Krasnoyarsk); Moscow, Sovetskoye Zdravookhraneniye, Russian, No 12, 1971, p 79]

Our times are characterized by an intensive increase in volume of information in different branches of knowledge due to deeper investigations involving the use of precise quantitative analytic methods. The development of cybernetics and complex computer technology has provided the possibility to expand the methodological armamentarium of sanitary statistical analysis in clinical and experimental medicine; descriptive medicine is gradually stepping down and giving its place to mathematical medicine. Knowledge gleaned for thousands of years about the etiology, pathogenesis, and symptomatology of different diseases is now being submitted to critical verification by means of precise investigation methods. Under these conditions, it is becoming particularly urgent to elevate the level of mathematical education of physicians, and first of all of scientific workers and instructors at medical institutes.

In the last few decades a considerable number of methodological textbooks and manuals on mathematical statistics and biometry has been published for medics and biologists; these publications did raise the level of special training of physicians in the area of medical statistical analysis. However, to this day there is validity to the view expressed 30 years ago by A.M. Markov** to the effect that most works dealing with statistics authored by physicians do not have much value, because of the authors' lack of proficiency with regard to the fundamentals of methods of medical statistical analysis, and in a considerable number of cases they can neither confirm or deny any position already voiced by someone.

This is due, to a certain extent, to the fact that the descriptions of methods of mathematical data processing given in a number of special manuals (L.S. Kaminskiy, I.P. Ashmarin, V.Yu. Urbakh, B.S. Bassmertnyy, and others)

*Nekotoryye Sovremennyye Metody Statisticheskogo Analiza v Meditsine, Uchebnoye Posobiye (Some Modern Methods of Statistical Analysis in Medicine, A Textbook), by G.P. Arkhipova, I.G. Lavrova, I.M. Treshina, Moscow, 1971, 76 pp.
**A.M. Markov, Zlokachestvennyye Novoobrazovaniya na Ukraine (Malignant Neoplasms in the Ukraine), Khar'kov, 1940.

APPROVED FOR RELEASE: 07/20/2001 CIA-RDP86-00513R002200730009-8"

"APPROVED FOR RELEASE: 07/20/2001 CIA-RDP86-00513R002200730009-8

USSR UDC: 621.374.5(088.8)

SMOLYANSKIY, V. A., FAYNSHMIDT, L. I., SMOLYANSKIY, R. Ye.

"An Electronic Time Delay Device"

USSR Author's Certificate No 273343, filed 13 Jan 69, published 10 Sep 70 (from RZh-Radiotekhnika, No 2, Feb 71, Abstract No 2G315 P)

Translation: This Author's Certificate introduces a delay device which contains a parallel time-mark RC circuit, a thyristor and a pulse generator. To increase the time-holding stability of the device, a resistor, semiconductor diode, thyristor, and a second resistor are connected in series to the power supply, the common point of the resistor and the anode of the semiconductor diode being connected to the output of the pulse generator, while the common point of the cathode of the semiconductor diode and the anode of the thyristor is connected to the cathode of a second semiconductor diode whose anode is connected through a resistor to the lead of the RC circuit. To increase the delay time, a resistor is connected between the anode of the thyristor and the power supply.

1/1

APPROVED FOR RELEASE: 07/20/2001 CIA-RDP86-00513R002200730009-8"

"APPROVED FOR RELEASE: 07/20/2001 CIA-RDP86-00513R002200730009-8

USSR UDC: 621.397.61

LEBEDEV-KARMANOV, A. I., STEPANOV, N. V., FAYNSHTEYN, A. L.

"New High-Power Band III Transmitters at the Soviet-Wide Radio and Television Transmitting Station"

V sb. Televizion. tekhnika (Television Technology--collection of works), Moscow, "Svyaz'", 1971, pp 266-302 (from RZh-Radiotekhnika, No 6, Jun 71, Abstract No 6G172)

Translation: The authors review the development of television transmitters in the Soviet Union from the thirties to the fifties. The peculiarities of construction of modern TV stations for the meter wave band are considered. The general characteristics of radio and television transmission equipment at the Ostankino telecenter are given. TV stations for band III with a power of 80/15 kW are described. Circuits of individual modules are presented, and the monitoring system and arrangement of the equipment at the center are described. Twenty-nine illustrations, bibliography of eight titles. N. S.

1/1

APPROVED FOR RELEASE: 07/20/2001 CIA-RDP86-00513R002200730009-8"

"APPROVED FOR RELEASE: 07/20/2001 CIA-RDP86-00513R002200730009-8

USSR UDC 620.186.5

GLEBOVA, E. D., GOL'DFARB, E. M., DUGANTSEV, A. YE., and FAYNSHTEYN, I. G. (Deceased)

"On the Welding of Automobile Steel Sheets During Annealing"

Dnepropetrovsk, Metallurgicheskaya i Gornorudnaya promyshlennost', No 5, Sep-Oct 70, pp 41-42

Abstract: A description is given of an experimental laboratory installation and procedure for studying the effect of the surface condition of samples, temperature, and annealing atmosphere on the welding of low-carbon steel sheets intended for use in automobile manufacturing. The degree of welding was evaluated by the tearing stress along the junction plane. A metallographic analysis of the surfaces of welded samples showed that welding begins in separate microsections having the aspect of viscous discontinuities corresponding to microsections having the aspect of viscous discontinuities corresponding to microbulging, i.e., traces of rollers. A durable junction between surfaces in contact appears as the result of an electron interaction process having a

1/2

APPROVED FOR RELEASE: 07/20/2001 CIA-RDP86-00513R002200730009-8"

"APPROVED FOR RELEASE: 07/20/2001 CIA-RDP86-00513R002200730009-8

USSR

GLEBOVA, E. D., et al, Metallurgicheskaya i Gornorudnaya promyshlennost', No 5, Sep-Oct 70, pp 41-42

quantum-mechanical nature. Surface polishing facilitates the formation of metallic bonds between surfaces. It was found that a neutral atmosphere contributes the most to decreased sheet welding during annealing. The dependence of tearing stress of welded samples on temperatures and annealing atmosphere is presented graphically.

2/2

APPROVED FOR RELEASE: 07/20/2001 CIA-RDP86-00513R002200730009-8"

"APPROVED FOR RELEASE: 07/20/2001 CIA-RDP86-00513R002200730009-8

USSR

FAYNSHTEYN, L. B., MAMAKOV, A. A.

"The Purification of Waste Water by Electric Current"

Elektronnaya Obrabotka Materialov, No 1, 1970, pp 50-55

Abstract: After a survey of the subject of the purification of waste water by electrolysis, with special emphasis on various processes in which current is passed through both electrodes, one of these processes, the electroflotation of waste water, is treated in greater detail. The method of electroflotation, known since 1904, has principally been used for the concentration of minerals. In the past ten years it has spread to many other industries. The survey concludes with a favorable evaluation of the process of electrical flotation of waste water, and recommends measures for the consideration of its further expansion.

1/1

APPROVED FOR RELEASE: 07/20/2001 CIA-RDP86-00513R002200730009-8"

"APPROVED FOR RELEASE: 07/20/2001 CIA-RDP86-00513R002200730009-8

USSR UDC 616.288.75+616.2-036.11]-053.2-085.339:576.858]-039.71

YERMOL'YEVA, Z. V., BLINOVA, M. I., FURER, N. M., RITOVA, V. V., KUCHERENKO, L. P., NEMIROVSKAYA, B. M., SHCHERBAKOVA, E. G., SCHASTNYY, E. I., ORLOVA, L. N., and FAYNSHTEYN, S. L., Chair of Microbiology, Central Institute for Advanced Training of Physicians, and Institute of Virology imeni D. I. Ivanovskiy, USSR Academy of Medical Sciences, Moscow

"Prophylaxis of Influenza and Other Acute Respiratory Diseases Among Children Through Administration of Leukocytic Interferon and a Stimulant of Interferon Production (UF Virus)"

Moscow, Voprosy Virusologii, No 4, Jul/Aug 71, pp 442-446

Abstract: An express method of preventing influenza and other acute respiratory diseases was tested in childrens' institutions in Moscow during the interepidemic period of March-June 1968 and during the influenza epidemic in January-February 1969. The project was carried out under strictly controlled, coded experimental conditions. The 750 children, aged 10 months to 7 years, were divided into four groups at random, and the preventive agents were administered intranasally. One group received leukocytic interferon two times per day for 7 to 42 days. The second group received interferon with liquid ecmoline. The third group received UF virus once daily for 3-4 days with

APPROVED FOR RELEASE: 07/20/2001 CIA-RDP86-00513R002200730009-8"

"APPROVED FOR RELEASE: 07/20/2001 CIA-RDP86-00513R002200730009-8

USSR

YERMOL'YEVA, Z. V., et al, Voprosy Virusologii, No 4, Jul/Aug 71, pp 442-446

intervals of 3-4 days. The fourth group received placebos. The effectiveness index of interferon was 3.0 (frequency of diseases three times smaller than in the placebo group) in the interepidemic period and 2.2 during the epidemic. The effectiveness index of interferon with ecmoline was 1.8, and that of UF virus was 3.0 in the interepidemic period. All differences are statistically significant. Since no toxic effects were observed, the method is recommended for the prevention of influenza and other acute respiratory diseases.

2/2

APPROVED FOR RELEASE: 07/20/2001 CIA-RDP86-00513R002200730009-8"

"APPROVED FOR RELEASE: 07/20/2001 CIA-RDP86-00513R002200730009-8

USSR

UDC 624.131.43+539.21.084-492.3

FAYNSHTEYN, YU. B.

"Characteristics of the Nature of the Shift in Rocks and the Surface of the Earth Under a Synclinal Attitude of the Strata"

V sb. Sdvizheniye gorn. porod (Displacement of Rock -- Collection of Works), (All-Union Scientific Research Institute of Mine Surveying, Vol. 83), Leningrad, 1971, pp 40-49 (from RZh-Mekhanika, No 3, Mar 72, Abstract No 3V985)

Translation: It is noted that the existing standard documents are lacking in methods for calculating the shift and deformation of the surface of the earth for a synclinal attitude of the strata. The results of natural and laboratory studies are described. In the laboratory studies a modeling of the shift process by the equivalent materials method was applied. The model was made of a mixture of fine-grained sand with machine oil. The technique for preparing the model is given. The basic results were:1)rocks occuring in the region of the central surface and the angle of incidence of the rock of the opposite wing of the fold have a considerable effect on the angular parameters of the shift and also on the magnitude of the deformations; (2) the point with maximum settling independent of the shape of the fold and the angle of incidence of the rock is

APPROVED FOR RELEASE: 07/20/2001 CIA-RDP86-00513R002200730009-8"

"APPROVED FOR RELEASE: 07/20/2001 CIA-RDP86-00513R002200730009-8

USSR

FAYNSHTEYN, YU. B., Sdvizheniye gorn. porod, Leningrad, 1971, pp 40-49

located under the finished wing of the fold or in the region of the outcrop of the central surface into the earth's surface; (3) compression deformations predominate on this wing and tensile deformations predominate on the opposite wing. Yu. M. Kartashov.

2/2

APPROVED FOR RELEASE: 07/20/2001 CIA-RDP86-00513R002200730009-8"

"APPROVED FOR RELEASE: 07/20/2001 CIA-RDP86-00513R002200730009-8

1/2 016 UNCLASSIFIED PROCESSING DATE--16OCT70

TITLE--PROTECTIVE COATINGS FOR CONCRETE SURFACES -U-

AUTHOR-(05)-ROSHCHUPKIN, V.I., FAYNTSIMER, R.Z., YAKOVLEV, D.A., PINUS, E.R., LISIENKO, S.K.

COUNTRY OF INFO--USSR

SOURCE--U.S.S.R. 260,877

REFERENCE--OTKRYTIYA, IZOBRET., PROM. OBRAZTSY, TOVARNYE ZNAKI 1970,

DATE PUBLISHED--06JAN70

SUBJECT AREAS--MATERIALS

TOPIC TAGS--PROTECTIVE COATING, CONCRETE, COUMARIN INDENE RESIN, BUTYL RUBBER, FILLER, CHEMICAL PATENT

CONTROL MARKING--NO RESTRICTIONS

DOCUMENT CLASS--UNCLASSIFIED

PROXY REEL/FRAME--1995/1094 STEP NO--UR/0482/70/000/000/0000/0000

CIRC ACCESSION NO--AA0116560

UNCLASSIFIED

APPROVED FOR RELEASE: 07/20/2001 CIA-RDP86-00513R002200730009-8"

"APPROVED FOR RELEASE: 07/20/2001 CIA-RDP86-00513R002200730009-8

2/2 016 UNCLASSIFIED PROCESSING DATE--16OCT70

CIRC ACCESSION NO--AA0116560

ABSTRACT/EXTRACT--(U) GP-0- ABSTRACT. PROTECTIVE COATINGS BASED ON ORG. COMPDS. ARE USED SHIEFLY FOR CONCRETE SURFACES. THEY HAVE GOOD PHYSICOMECH. PROPERTIES, DESIRED ROUGHNESS, AND A RAPID RATE OF COATING. THEY CONSISTED OF: COUMARONE-INDENE RESIN 1-50, PETROLATUM 5-30, PARAFFIN 0.5-5, BUTYL RUBBER 0.05-2, FILLER 1.0-30, AND AN ORG. SOLVENT 10-200 PARTS-WT. A MIXT. OF ZR WITH AL POWDER IN A 1:10 WT. RATIO IS USED AS THE FILLER. FACILITY: STATE SCIENTIFIC RESEARCH AND PLANNING INSTITUTE OF PETROLEUM MACHINE CONSTRUCTION. FACILITY: STATE ALL UNION SCIENTIFIC RESEARCH INSTITUTE OF HIGHWAYS.

UNCLASSIFIED

APPROVED FOR RELEASE: 07/20/2001 CIA-RDP86-00513R002200730009-8"

"APPROVED FOR RELEASE: 07/20/2001 CIA-RDP86-00513R002200730009-8

AA0040687 Faynveyts, Ya. I. UR 0482

Soviet Inventions Illustrated, Section I Chemical, Derwent, 1-70

240212 TUNDISH FOR CONTINUOUS CASTING has a dished or rounded bottom and is lined to a given radius. The rigidity of the welded tundish casing is improved in this way, an important factor in that the tundish is the most failure-prone unit comprising the continuous casting system.

18

19750300

APPROVED FOR RELEASE: 07/20/2001 CIA-RDP86-00513R002200730009-8"

"APPROVED FOR RELEASE: 07/20/2001 CIA-RDP86-00513R002200730009-8

AA0040687

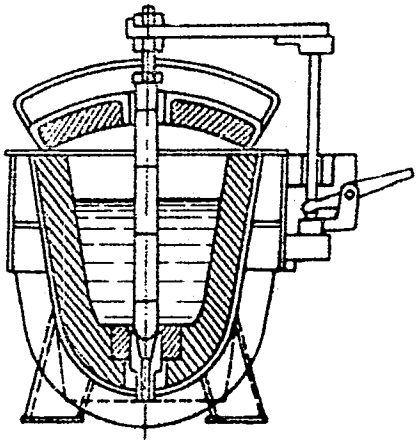

1.6.63 as 839656/22-2. SAVCHENKO.A.P. & FAYNVEYTS,YA.I.
(25.8.69) Bul 12/21.3.69. Class 31c. Int.Cl.B 22b.

1/1

19750301

10

APPROVED FOR RELEASE: 07/20/2001 CIA-RDP86-00513R002200730009-8"

"APPROVED FOR RELEASE: 07/20/2001 CIA-RDP86-00513R002200730009-8

AA0040649 Faynveyts, Ya. I. UR 0482 3/70

Soviet Inventions Illustrated, Section I Chemical, Derwent,

233848 VERTICALLY SHEARED CONTINUOUS CAST INGOTS

are transferred in this position for further treatment at low cost in terms of equipment involved. A carriage 1 with dummy bar 2 verticalised in the basket 3 are fed in under the casting engine and the bar gripped 4 and thrust into t e withdrawal rolls 5 and so into the mould 7. Once the mould is full, the rolls draw the dummy downwards: this is sheared 8, lowered onto the trolley and carried out clear of the casting engine. Now the platform 9 with its vertically disposed cells 10 is run in under the engine and the shears crop the ingot 11 (of set length as programmed) and this is lowered gast into its cell. The platform now inches 12 on to bring the next cell into the teeming position and so on.
30.11.63. as 868253/22-2. BUTKEVICH, V.A. and FAINVEITS, Ya.I. Metallurgical Plant Design Inst. (26.6 69.) Bul.3/24.12.68. Class 31c. Int.Cl. B22d.

1/3

18

19750230

APPROVED FOR RELEASE: 07/20/2001 CIA-RDP86-00513R002200730009-8"

"APPROVED FOR RELEASE: 07/20/2001 CIA-RDP86-00513R002200730009-8

AA0040649

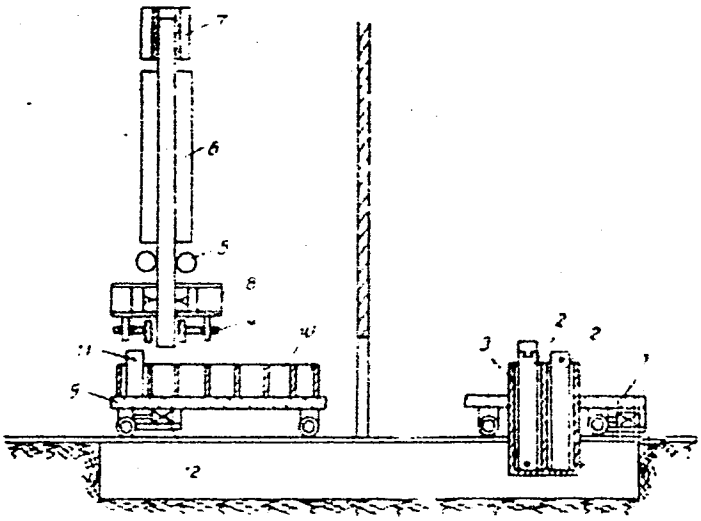

2/3

19750231

APPROVED FOR RELEASE: 07/20/2001 CIA-RDP86-00513R002200730009-8"

"APPROVED FOR RELEASE: 07/20/2001 CIA-RDP86-00513R002200730009-8

AA0040649

AUTHORS: Butkevich, V. A. and Faynveyts, Ya. I.

Gosudarstvennyy Soyuznyy Institut po Proyektirovaniyu Metallurgicheskikh Zavodov

19750232

3/3

APPROVED FOR RELEASE: 07/20/2001 CIA-RDP86-00513R002200730009-8"

"APPROVED FOR RELEASE: 07/20/2001 CIA-RDP86-00513R002200730009-8

1/2 015 UNCLASSIFIED PROCESSING DATE--30OCT70

TITLE--MUTUAL EXCHANGE OF HALIDES IN THE REACTION FO ALPHA HALOPOLYNITROALKANES WITH METAL HALIDES -U-

AUTHOR-(03)-SLOVETSKIY, V.I., KHISAMUTDINOV, G.KH., FAYNZILBERG, A.A.

COUNTRY OF INFO--USSR

SOURCE--IZV. AKAD. NAUK SSSR, SER. KHIM. 1970, (3), 728

DATE PUBLISHED--------70

SUBJECT AREAS--CHEMISTRY

TOPIC TAGS--ORGANIC NITRO COMPOUND, ALKANE, HALOGENATED ORGANIC COMPOUND, EXCHANGE REACTION, LITHIUM COMPOUND, BROMIDE, LITHIUM CHLORIDE

CONTROL MARKING--NO RESTRICTIONS

DOCUMENT CLASS--UNCLASSIFIED

PROXY REEL/FRAME--2000/0746 STEP NO--UR/0062/70/000/003/0728/0728

CIRC ACCESSION NO--AP0124416

UNCLASSIFIED

APPROVED FOR RELEASE: 07/20/2001 CIA-RDP86-00513R002200730009-8"

"APPROVED FOR RELEASE: 07/20/2001 CIA-RDP86-00513R002200730009-8

2/2 015 UNCLASSIFIED PROCESSING DATE--30OCT70

CIRC ACCESSION NO--AP0124416

ABSTRACT/EXTRACT--(U) GP-0- ABSTRACT. KEEPING (O SUB2 N)SUB3 CCL WITH LIBR 1 DAY IN ETOH GAVE 55PERCENT (O SUB2 N)SUB3 CBR, WHICH WITH LICL IN ETOH OR DMF SIMILARLY GAVE (O SUB2 N)SUB3 CCL IN 60PERCENT OR 53PERCENT YIELDS, RESP. (O SUB2 N)SUB3 CI AND LICL OR LIBR IN ETOH OR ME SUB2 SO RAPIDLY GAVE (O SUB2 N)SUB3 CCL OR (O SUB2 N)SUB3 CBR, RESP., IN 30-5PERCENT YIELDS. FBRC(NO SUB2)SUB2 AND LICL IN DMF IN 380 HR AT 20DEGREES GAVE FCLC(NO SUB2)SUB2 AND MECBR(NO SUB2)SUB2 GAVE MECCL(NO SUB2)SUB2 IN 720 HR; THE YIELDS WERE 70 AND 43PERCENT, RESP. CONVERSIONS OF THESE WITH LIBR GAVE MUCH LOWER YIELDS. EHNCE THE MECHANISMS OF MANY CLASSICAL REACTIONS OF POLYNITROHALOALKANES MUST BE TREATED FROM A NEW POSITION AS BIMOL NUCLEOPHILIC DISPLACEMENTS AT THE C ATOM. THUS, A SLOW EQUIL. DEVELOPS BETWEEN RC(NO SUB2)SUB2 X AND KI AND KX AND RC(NO SUB2)SUB2 I AND A FAST EQUIL. REACTION BETWEEN THE LATTER AND KI WITH RC(NO SUB2)SUB2 K PLUS I SUB2, TO EXPLAIN THE IODOMETRIC REACTION OF SUCH COMPDS. FACILITY: INST. ORG. KHIM. IM. ZELINSKOGO, MOSCOW, USSR.

UNCLASSIFIED

APPROVED FOR RELEASE: 07/20/2001 CIA-RDP86-00513R002200730009-8"

"APPROVED FOR RELEASE: 07/20/2001 CIA-RDP86-00513R002200730009-8

FAYNZIL'BERG, A.A.

Acc. Nr. AT0049881 Abstracting Service: CHEMICAL ABST. 5/70 Ref. Code 4R0020

105739n EPR study of single-electron transfer reactions in a series of polynitro- and halopolynitroalkanes. Shapiro, B. I.; Okhlobystina, L. V.; Khutoretskii, V. M.; Fainzil'berg, A. A.; Syrkin, Ya. K. (Inst. Org. Khim. im. Zelinskogo, Moscow, USSR). *Dokl. Akad. Nauk SSSR* 1970, 190(1), 151-4 [Phys Chem] (Russ). EPR signals were detected at −30° in the reaction products of 2,4,6-tri-*tert*-butylphenoxyl anion with the indicated substances: $(O_2N)_3C$ (I), $ClC(NO_2)_3$ (II), $FC(NO_2)_3$, and $MeC(NO_2)_3$ (III), as well as $FC(NO_2)_2Cl$, $F_2C(NO_2)_2$, $PhC(NO_2)_2F$ (IV), $MeC(NO_2)_2Cl$, $MeC(NO_2)_2F$, and $Me_2C(NO_2)_2$; at room temp. the EPR signal was obtained only from I, II, III, and IV systems. The uv spectra of these were also reported for detection of the polynitro anions; these were absent in cases of $PhC(NO_2)_2^-$ and $MeC(NO_2)_2^-$ only. The results confirmed that the anion-radical mechanism describes the nature of the reaction of the polynitro compds. with the anion shown above.

G. M. Kosolapoff

1/1

REEL/FRAME
19801813

7

APPROVED FOR RELEASE: 07/20/2001 CIA-RDP86-00513R002200730009-8"

"APPROVED FOR RELEASE: 07/20/2001 CIA-RDP86-00513R002200730009-8

1/3 029 UNCLASSIFIED PROCESSING DATE--23OCT70

TITLE--FLUORINATION OF SALTS OF ALPHA, BETA, AND GAMMA SUBSTITUTED GEMDINITRO COMPOUNDS BY PERCHLORYL FLUORIDE -U-

AUTHOR-(03)-OKHLOBYSTINA, L.V., KHUTORETSKIY, V.M., FAYNZILBERG, A.A.

COUNTRY OF INFO--USSR

SOURCE--IZV. AKAD. NAUK SSSR, SER. KHIM. 1970, (2), 387-92

DATE PUBLISHED--------70

SUBJECT AREAS--CHEMISTRY

TOPIC TAGS--FLUORNITRO COMPOUND, CHEMICAL SYNTHESIS, NITRILE, ORGANIC NITRO COMPOUND, AMINE DERIVATIVE, NMR SPECTRUM, IR SPECTRUM

CONTROL MARKING--NO RESTRICTIONS

DOCUMENT CLASS--UNCLASSIFIED

PROXY REEL/FRAME--1997/0614 STEP NO--UR/0062/70/000/002/0387/0392

CIRC ACCESSION NO--AP0119721

UNCLASSIFIED

APPROVED FOR RELEASE: 07/20/2001 CIA-RDP86-00513R002200730009-8"

"APPROVED FOR RELEASE: 07/20/2001 CIA-RDP86-00513R002200730009-8

2/3 029 UNCLASSIFIED PROCESSING DATE--23OCT70

CIRC ACCESSION NO--AP0119721

ABSTRACT/EXTRACT--(U) GP-0- ABSTRACT. PASSING FCLO SUB3 INTO 7.2 G (O SUB2 N) SUB2 C(HN SUB4)CONH SUB2 IN (CH SUB2 OME) SUB2 2 HR AT 20DEGREES GAVE AFTER DILN. AND EXTN. WITH ET SUB2 O 5.6PERCENT CF(NO SUB2) SUB2 CONH SUB2, M. 29DEGREES. SIMILARLY (O SUB2 N) SUB2 C(NH SUB3 ET)CONHET GAVE 14PERCENT CF(NO SUB2) SUB2 CONHET, B SUB2 102-8DEGREES, M. 47DEGREES. REACTION OF FCLO SUB3 WITH A SOLN. OF (O SUB2 N) SUB2 CHACN 4 DAYS GAVE, IN HOCH SUB2 CH SUB2 OME, 74PERCENT FC(NO SUB2) SUB2 C(:NH)OCH SUB2 CH SUB2 OME, B SUB2 85-9DEGREES, N PRIME20 SUBD 1.4370. SIMILARLY, (O SUB2 N) SUB2 CKCH SUB2 C(NO SUB2) SUB2 ME IN THF WITH FCLO SUB3 3 HR AT 0-2DEGREES GAVE 29PERCENT 1,FLUORO,1,1,3,3,TETRANITROBUTANE, M. 37-8DEGREES. K SALT OF (O SUB2 N) SUB2CHCH SUB2 OH AND FCLO SUB3 SIMILARLY GAVE IN 13 HR AT 20DEGREES 20PERCENT CF(NO SUB2) SUB2 CH SUB2 OH, B SUB1 54 DEGREES. FCLO SUB3 PASSED INTO KC(NO SUB2) SUB2 CH SUB2 OME IN ME SUB2 CO GAVE 64PERCENT FC(NO SUB2) SUB2 CH SUB2 OME, B SUB28 75-7DEGREES, N PRIME20 SUBD 1.4062, D PRIME20 1.3855. FCLO SUB3 PASSED INTO KC(NO SUB2) SUB2 CH SUB2 HNAC IN ME SUB2 NCHO 1.5 HR, AT 20DEGREES GAVE 88PERCENT CF(NO SUB2) SUB2 CH SUB2 NACN, M. 55DEGREES. (O SUB2 N) SUB2 CHCH SUB2 HNBZ IN MEOH TREATED WITH MEONA, THEN FCIO SUB3 1.5 HR, GAVE 82PERCENT CF(NO SUB2) SUB2 CH SUB2 NHBZ, M. 89DEGREES. KC(NO SUB2) SUB2 CH SUB2 CH SUB2 CN AND FCLO SUB3 IN ME SUB2 CO OVERNIGHT GAVE 49PERCENT FC(NO SUB2) SUB2 CH SUB2 CH SUB2 CN, M. 21DEGREES. K SALT OF 5,5,DINITRO,2,PENTANONE AND FCLO SUB3 IN THF 3 HR GAVE 65PERCENT CF(NO SUB2) SUB2 CH SUB2 CH SUB2 AC, B SUB2 71-4DEGREES, B SUB4 86-7DEGREES, 1.4382, 1.3577.

UNCLASSIFIED

APPROVED FOR RELEASE: 07/20/2001 CIA-RDP86-00513R002200730009-8"

"APPROVED FOR RELEASE: 07/20/2001 CIA-RDP86-00513R002200730009-8

3/3 029 UNCLASSIFIED PROCESSING DATE--23OCT70

CIRC ACCESSION NO--AP0119721

ABSTRACT/EXTRACT--(O SUB2 N) SUB2 CHCH SUB2 CH SUB2 BZ SIMILARLY TREATED WITH NAOH IN HOCH SUB2 CH SUB2 OME, FOLLOWED BY FCLO SUB3, GAVE 93PERCENT CF(NO SUB2) SUB2 CH SUB2 CH SUB2 BZ, M. 52.5DEGREES. FCLO SUB3 AND KC(NO SUB2) SUB2 CH SUB2 CH SUB2 NHAC IN (CH SUB2 OME) SUB2 GAVE 93PERCENT CF(NO SUB2) SUB2 CH SUB2 CH SUB2 NHAC, B SUB2 125-30DEGREES, 1.4603. IR AND NMR SPECTRAL DATA ARE GIVEN.

FACILITY: INST. ORG. KHIM. IM. ZELINSKOGO, MOSCOW, USSR.

UNCLASSIFIED

APPROVED FOR RELEASE: 07/20/2001 CIA-RDP86-00513R002200730009-8"

"APPROVED FOR RELEASE: 07/20/2001 CIA-RDP86-00513R002200730009-8

USSR UDC: 536.24:536.42

BUTUZOV, A. I., ~~EAYNZILBERG, S. N.~~, BEZRODNYY, M. K., USENKO, V. I., KUDELYA, P. P.

"On the Problem of Studying Heat Exchange During Boiling of Liquids Under Inertial Loading Conditions"

Teplofiz. i teplotekhnika. Resp. mezhved. sb. (Thermal Physics and Heat Engineering. Republic Interdepartmental Collection), 1970, Vol 16, pp 137-140 (from RZh-Mekhanika, No 9, Sep 70, Abstract No 9B869)

Translation: Experiments are conducted on determining the laws of heat exchange which accompany boiling of freon-12 and water on heating surfaces with thermal loads $q = (6.6\text{-}200)$ kW/m^2, and with inertial overloads $a/g = 1\text{-}5250$. Three typical heat exchange regions are distinguished: well developed boiling when $q > q_{fc} + q_{ub}$, undeveloped boiling -- $q_{fc} < q < q + q_{ub}$, and a heat exchange region with free convection -- $q < q_{fc}$. The thermal loads q_{fc} and q_{ub} are given in the form of power functions of the inertial overloads and the kind of liquid. In addition, q_{fc} depends on the thickness of the liquid layer on the heat exchange surface. For the heat exchange region with free convection, the authors recommend the usual form of dimensionless relationship with substitution of inertial acceleration a for acceleration due to

APPROVED FOR RELEASE: 07/20/2001 CIA-RDP86-00513R002200730009-8"

"APPROVED FOR RELEASE: 07/20/2001 CIA-RDP86-00513R002200730009-8

USSR

BUTUZOV, A. I., et al, Teplofiz. i teplotekhnika. Resp. mezhved. sb., 1970, Vol 16, pp 137-140 (from RZh-Mekhanika, No 9, Sep 70, Abstract No 9B869)

gravity g. In the region of well developed boiling, the conventional form of relationship between the coefficient of heat exchange α and heat flux $q_b = q - q_{fc}$. The effect of inertial overloading is accounted for in the parameter q_{fc}. In the region of undeveloped boiling, they propose a relationship of the form $\alpha = cq_k^n(a/g)^m$, where c, m and n are constants. The results of the experiments agree with the data of McAdams, Mert and Clark. A description is given of the construction of an installation with closed circulation of the cooling agent in the rotor sections of a model; this installation can be used to conduct experiments at heat fluxes of up to 10 MW/m^2. Yu. Ye. Pokhvalov.

2/2

APPROVED FOR RELEASE: 07/20/2001 CIA-RDP86-00513R002200730009-8"

"APPROVED FOR RELEASE: 07/20/2001 CIA-RDP86-00513R002200730009-8

Acc. Nr.: A70046706 Ref. Code: UR0146

USSR UDC 681.128.5

BUTUZOV, A.I., BEZRODNYY, M.K., FAYNZIL'BERG, S.N., KUDELYA, P.P., USENKO, V.I.

"Thermistor Compensated Quantity Gage"

Termorezistornyy kompensirovannyy urovnemer (cf. English above), Leningrad, Izvestiya Vysshikh Uchebnykh Zavedeniy, Priborostroyeniye, 1970, No 1, pp 123-126

Translation:

The design is considered of a thermistor quantity gage with compensation for the errors associated with the variation of the parameters of the ambient medium.

1/1 57 21

Reel/Frame
19790009

APPROVED FOR RELEASE: 07/20/2001 CIA-RDP86-00513R002200730009-8"

"APPROVED FOR RELEASE: 07/20/2001 CIA-RDP86-00513R002200730009-8

USSR

UDC 51.621.391

FAYSI, Ch. V.

"Differentiability of Infinite Automata"

Probl. Kibernetiki [Problems of Cybernetics -- Collection of Works], No. 23, Moscow, Nauka Press, 1970, pp 209-212 (Translated from Referativnyy Zhurnal Kibernetika, No. 4, April, 1971, Abstract No. 4 V461 by G. Blokhina).

Translation: The properties of finite and infinite automata are studied. Let $U=(Q,X,Y,\Phi,\Psi)$ be a strongly coupled automaton, where Q is the set of states, X and Y are the input and output alphabets, Φ and Ψ are the functions of transitions and outputs respectively. Automaton U may be finite or infinite. It is proven that for any automaton $W=(P,X,Y,\Phi',\Psi')$: a) either for any state q of Q a state p of P equivalent to it is found, b) or there is no equivalent state from P for any state q of Q. It is further proven that if U and W are infinite, synchronous, strongly coupled automata and U cannot be distinguished from W by any finite experiment, it may occur that there is no equivalent p P for any q Q.

In conclusion, the author establishes the following theorem. Let U be a strongly coupled infinite automaton, indistinguishable by any finite experiment from automaton W with denumerable set of states (with the same input and output alphabets). Then for any state of automaton U there exists an equivalent state of automaton W.

APPROVED FOR RELEASE: 07/20/2001 CIA-RDP86-00513R002200730009-8"

"APPROVED FOR RELEASE: 07/20/2001 CIA-RDP86-00513R002200730009-8

UDC 636.083.37

USSR

KARANFILOV, N. I., Chairman of Kolkhoz imeni M. V. Frunze, Ovidiopol'skiy Rayon, Odesskaya Oblast, Honored Veterinarian, Ukrainian SSR, FAYTEL'BERG, R. Q., Doctor of Medical Sciences, TKACHENKO, G. P., Candidate of Biological Sciences, Senior Scientific Associate, Odessa State University imeni M. I. Mechnikov, MEDVEDEVA, Ye. I., Doctor of Biological Sciences, PANCHENKO, K. A., PETRENKO, Ye. V., LUKINA, G. D., Senior Engineers, BOYKO, L. I., and SELICH, Ye. F., Engineers, Odessa Technological Institute of the Food Industry imeni M. V. Lomonosov

"The Effect of a Preparation Obtained From Algae (Phyllophora) Upon the Weight Gains and Blood Composition of Calves"

Moscow, Zhivotnovodstvo, No 3, Mar 72, pp 82-83

Abstract: A valuable preparation containing amino acids and peptides has been developed from industrial Phyllophora waste by the Odessa Technological Institute of the Food Industry (Author's Certificate No 287959). Employed as a fodder supplement, 4.5 kg of the preparation yield an incremental weight gain of 11.43 kg, in other words, 2.54 kg of meat for each kilogram of the preparation, which costs less than 30 kopeks. The erythrocyte number of the calves increases, as does the hemoglobin content and the total protein content. Additional testing is recommended.

1/1

APPROVED FOR RELEASE: 07/20/2001 CIA-RDP86-00513R002200730009-8"

"APPROVED FOR RELEASE: 07/20/2001 CIA-RDP86-00513R002200730009-8

USSR UDC 612.015.348.547.965.014.426.014.45

FAYTEL'BERG-BLANK, V. P., and ZHUK, Ye. I., Odessa State Agricultural Institute

"Respiration of Cerebrocortical Mitochondria in Rabbits Exposed to Ultrasound"

Kiev, Doklady Akademii Nauk Ukrainskiy SSSR, No 7, 1971, pp 651-654

Abstract: Ultrasound altered the respiration of rabbit cerebrocortical mitochondria in relation to the dose and duration of exposure. Ultrasound at an intensity of 0.3 w/cm^2 directed toward the parietal cortex for 5 min increased mitochondrial respiration appreciably. Respiration also increased after exposure to 0.6 w/cm^2, but to a lesser degree. At intensities of 1.0 and 1.6 w/cm^2, on the other hand, mitochondrial respiration was depressed. Ultrasound directed toward the animals' epigastrium at an intensity of 1.0 w/m^2 for 5 min decreased the respiratory activity of the cortical mitochondria and prolongation of the exposure to 10 min depressed oxygen consumption even more.

1/1

APPROVED FOR RELEASE: 07/20/2001 CIA-RDP86-00513R002200730009-8"

"APPROVED FOR RELEASE: 07/20/2001 CIA-RDP86-00513R002200730009-8

F

Acc. Nr: AP0052337 Ref. Code: UR0238

PRIMARY SOURCE: Fiziologichniy Zhurnal, 1970, Vol 16, Nr 2, pp 281-286

EFFECT OF EXPERIMENTAL HYPOTHERMY ON THE SECRETORY AND RESORPTIVE FUNCTION OF SMALL INTESTINES

R. O. Faytel'berg, V. D. Bashev

Department of Human and Animal Physiology, the I. I. Mechnikov State University, Odessa

The secretory and resorptive activity of the small intestine was studied with hypothermy. The experiments were conducted on dogs with an isolated intestinal loop according to Thiry.

It is established, that after hypothermy of 26—24° C the amount of intestinal juice drops, proteolytic activity of enzymes increases and amylolytic and lipolytic activities decrease. These changes mostly took place on the 2—3th day and were preserved during 6—8 days. The secretory activity of the intestines restores on the 10—12th day. Glucose and glycin resorption during hypothermy sharply lowers. It remains lowered during 6—8 days. Resorptive activity of the intestines restores on the 8—10th day.

1/1

REEL/FRAME
19820923

2

APPROVED FOR RELEASE: 07/20/2001 CIA-RDP86-00513R002200730009-8"

"APPROVED FOR RELEASE: 07/20/2001 CIA-RDP86-00513R002200730009-8

USSR

VIBE, K. G., and FAYTEL'BERG-BLANK, V. R.

"The Effect of High Frequency Currents of Diathermy on the Content of Nucleic Acids in the Internal Organs of Rabbits"

Tr. Tschinogr. S.- Kh. In-t. (Proceedings of the Tschinograd Agricultural Institute), 1973, Vol 9, No 5, pp 27-37 (from RZh-Biologicheskaya Khimiya, No 24, Dec 73, Abstract No 24F 1436)

Translation: The effect of high frequency currents of diathermy with varying force and duration was investigated in respect to the exchange of DNA and RNA in internal organs (liver, pancreas, stomach, small intestine, spleen, adrenals and lungs) of rabbits. It was shown that quantitative shifts in the content of NA can be determined from the force and duration of the action of diathermal current.

1/1

APPROVED FOR RELEASE: 07/20/2001 CIA-RDP86-00513R002200730009-8"

"APPROVED FOR RELEASE: 07/20/2001 CIA-RDP86-00513R002200730009-8

UDC 612.813

USSR

FAYTEL'BERG-BLANK, V. R., and PEREVOSHCHIKOV, Yu. O., Chair of Pathophysiology and Biophysics, Odessa Agricultural Institute, Odessa

"The Permeability of the Synovial Membrane of the Knee Joint to Radiophosphorus Under the Effect of Pulsed Sinusoidal Modulated Currents"

Kiev, Fiziologichniy Zhurnal, Vol 19, No 3, May/Jun 73, pp 388-395

Abstract: The permeability of the synovial membrane of the knee joint to ^{32}P under the effect of sinusoidal modulated pulsed currents was studied in experiments on cats to which ^{32}P-Na_2PO_4 was injected into the knee joint. The effect of currents with a modulation frequency of 40, 80, or 150 cycles, current densities of 0.1, 0.3, and 0.5 ma/sq. cm., a pulse duration of 2 or 4 sec, modulation factors of 50 and 100%, and a duration of 5, 10, or 20 min in increasing the transfer of ^{32}P into the blood was investigated. The greatest effect in increasing the transfer of ^{32}P from the knee joint cavity was exerted by a current with a pulse duration of 2 sec, a density of 0.1 ma/sq. cm., a 20 min length of the time of action, a 50% modulation factor, and a modulation frequency of 40 cycles. A significant effect in increasing the permeability of the synovial membrane was also exerted by a current with

1/2

APPROVED FOR RELEASE: 07/20/2001 CIA-RDP86-00513R002200730009-8"

"APPROVED FOR RELEASE: 07/20/2001 CIA-RDP86-00513R002200730009-8

USSR

FAYTEL'BERG-BLANK, V. R., and PEREVOSHCHIKOV, Yu. O., Fiziologichniy Zhurnal, Vol 19, No 3, May/Jun 73, pp 388-395

a pulse duration of 2 sec, a frequency of 40 cycles, a density of 0.5 ma/sq. cm., a 50% modulation factor, and a 10 min length of the time of action. Resorption of ^{32}P from the blood by internal organs decreased in the order kidneys > liver > spleen > lungs. The results should be of value for determining the dosage and type of sinusoidal modulated currents to be applied in the therapy of joint diseases.

2/2

APPROVED FOR RELEASE: 07/20/2001 CIA-RDP86-00513R002200730009-8"

"APPROVED FOR RELEASE: 07/20/2001 CIA-RDP86-00513R002200730009-8

USSR UDC 612.013.7:612.014.428

FAYTEL'BERG-BLANK, V. R. and SIVORINOVS'KIY, G. O., Odessa Agricultural Institute

"Effect of Ultrasound and Superhigh-Frequency Electromagnetic Field in the 3 cm Range on Oxidative Phosphorylation in Liver and Kidney Mitochondria"

Kiev, Fiziologichnyy Zhurnal, No 6, 1972, pp 808-814

Abstract: Ultrasound at an intensity of 0.1 w/cm^2 applied to the abdomen of rats had no significant effect on oxidative phosphorylation in liver and kidney mitrochondria after 1 or 10 exposures. Sonication at 0.3 w/cm^2 intensified oxidative phosphorylation after a single exposure, but oxidation became completely dissociated from phosphorylation after 10 exposures. A single exposure to an electromagnetic field in the 3 cm range at intencities of 25, 50, and 100 μw/cm^2 decreased the efficiency of phosphorylation in the mitochondria, whereas the parameters of phosphorylation returned to normal after 10 exposures. This suggests that ultrasound has cumulative effects while a low-intensity electromagnetic field permits adaptation.

1/1

APPROVED FOR RELEASE: 07/20/2001 CIA-RDP86-00513R002200730009-8"

"APPROVED FOR RELEASE: 07/20/2001 CIA-RDP86-00513R002200730009-8

UDC 612.014.3:612.014.45

USSR

ZHUK, YE. I., and FAYTEL'BERG-BLANK, V. R., Chair of Pathophysiology and Biophysics, Odessa Agricultural Institute

"The Effects of Ultrasonic Vibrations on Cells and Subcellular Structures"

Moscow, Voprosy Kurortologii Fizioterapii i Lechebnoy Fizicheskoy Kul'tury, No 3, 1972, pp 198-201

Abstract: Ultrasonic radiation of 20 khz and 3 watts/cm^2 kills young yeast cells within 60 mins but stimulates growth of older cells. Radiation of 880 khz increases the electrokinetic potential of yeast cell membranes, and this increase is proportional to the intensity and duration of irradiation. A maximum increase in the polarographic activity of yeast cells occurs after irradiation intensity of 1 watt/cm^2. The respiratory rate of cerebral cortex mitochondria increases by a factor of 2.5 after irradiation with 0.3 watt/cm^2 for 5 mins but decreases below the control level after irradiation of greater intensity and duration. On the whole, the findings agree with the concept that physiological processes are stimulated by small doses of ultrasonic irradiation but are inhibited by larger doses.

1/1

APPROVED FOR RELEASE: 07/20/2001 CIA-RDP86-00513R002200730009-8"

"APPROVED FOR RELEASE: 07/20/2001 CIA-RDP86-00513R002200730009-8

USSR UDC 612.215.5.014.424

FAYTEL'BERG-BLANK, V. R., and KUTSENKO, P. YA., Chair of Pathological Physiology and Biophysics, Odessa Agricultural Institute

"Effect of Microwaves on Resorption Functions of the Alimentary Apparatus"

Kiev, Fiziologichnyy Zhurnal, Vol 17, No 6, Nov/Dec 71, pp 813- 819

Abstract: The method of radioactive indication was used in the study of the effect of microwaves with a strength of 30, 50, and 75 watts with 10-20 minute exposure on the alimentary functions of the gastrointenstinal tract. Rabbits 1.8-2.5 kg in weight were used in the experiments. The resorptive activit of the alimentary apparatus was evaluated with the use of a radioactive phosphorus (P^{32}) salt administered to the animals under local novocaine anesthesia into sections of the gastrointestinal tract separated by ligatures. The P^{32} salt was administered in doses of 22.5 micromillicurie/kg and volumes of 5 liters. Within 3 hours after the administration of the P^{32} salt the animals were sacrificed by means of an electric current, and sections of the liver, lungs, kidney, and spleen were excised and examined for their content of phosphorus. Microwaves were generated by the Luch-58 apparatus with an oscillation frequency of 2,307 millicycles and an electromagnetic wave length of 12.5 cm. The distance of the generator's electrode to the anterior

1/2

APPROVED FOR RELEASE: 07/20/2001 CIA-RDP86-00513R002200730009-8"

"APPROVED FOR RELEASE: 07/20/2001 CIA-RDP86-00513R002200730009-8

USSR

FAYTEL'BERG-BLANK, V. R., and KUTSENKO, P. YA., Fiziologichnyy Zhurnal, Vol 17, No 6, Nov/Dec 71, pp 813-819

peritoneal wall was establihsed at 5 cm. The data obtained indicate that microwaves, depending on their strength and the time of the organism's exposure to thier action, have different effects on the resorptive activity of the separate sections of the gastrointenstinal tract; that of the stomach is somewhat decreased, while that of the small and large intestines is increased. Small doses of microwaves intensify the resorptive activity of the intestines to a larger degree than do large doses. Under the influence of microwaves, P^{32} is deposited in the internal organs in considerably larger quantities than under normal conditions.

2/2

APPROVED FOR RELEASE: 07/20/2001 CIA-RDP86-00513R002200730009-8"

"APPROVED FOR RELEASE: 07/20/2001 CIA-RDP86-00513R002200730009-8

USSR UDC 612.014.44

VIBE, K. G., ALEKSEYEV, V. I., and FAYTEL'BERG-BLANK, V. B., Tselinograd Agricultural Institute and Odessa Agricultural Institute

"Effect of Short-Wave Ultraviolet Irradiation on Absorption Functions of the Small Intestine"

Moscow, Doklady Akademii Nauk SSSR, Vol 199, No 6, 1971, pp 1,453-1,455

Abstract: Dogs with an isolated loop of small intestine were exposed to short-wave ultraviolet irradiation of the epigastric region with 1.5 and 3 biological doses. The absorption capacity of the intestine was determined by introducing into the organ 20 ml of a 7% sugar solution for periods of 30 minutes. The unabsorbed part of the solution was then extracted, and the loop washed with distilled water. The amount of sugar absorbed was determined on the basis of the difference between the quantity administered and that extracted, with allowance for secretion. The experiments established that ultraviolet rays in a 1.5 biological dose intensify sugar absorption in the small intestine, increasing it in some cases from the norm of 332.8 to 604 mg within 1.5 hours after the beginning of the experiments. It then begins to decline reaching the initial norm within 48 hours after the irradiation. Irradiation with 3 biological doses causes only a brief and slight elevation

APPROVED FOR RELEASE: 07/20/2001 CIA-RDP86-00513R002200730009-8"

"APPROVED FOR RELEASE: 07/20/2001 CIA-RDP86-00513R002200730009-8

USSR

VIBE, K. G., et al., Doklady Akademii Nauk SSSR, Vol 199, No 6, 1971, pp 1,453-1,455

of absorption capacity in the beginning; it then begins to decline, attaining its norm within 96 hours after the beginning of the experiment. The assumption is that the larger dose stimulates the inhibitory process, reduces the functional activity of the intestinal mucosa, thereby depressing the function of the digestive system.

2/2

APPROVED FOR RELEASE: 07/20/2001 CIA-RDP86-00513R002200730009-8"

"APPROVED FOR RELEASE: 07/20/2001 CIA-RDP86-00513R002200730009-8

USSR UDC 612.015.348:547.965].014.426.014.45

VIBE, K. G., MIROYEDOVA, E. P., KULACHENKO, S. P., and FAYTEL'BERG-BLANK, V. R., Chair of Animal Physiology, Tselionograd Agricultural Institute, and Chair of Pathophysiology, Tselinograd Medical Institute

"Changes in the Amino Acid Content in Internal Organs of Rabbits Exposed to High-Frequency Electromagnetic and Ultrasound Oscillations"

Moscow, Byulleten' Eksperimental'noy Biologii i Meditsiny, No 10, Oct 70, pp 47-48

Abstract: Experiments on rabbits showed that high-frequency electromagnetic fields and ultrasound, like other physical agents, change physiological processes according to dose rate and duration of exposure. For example exposure to a SHF field(centimeter waves) of 30 or 50 w for 10 min did not significantly alter the free amino acid content of the liver, stomach, small intestine, lungs, spleen, and kidneys. After exposure to SHF field (centimeter waves) of 75 w for the same length of time, however, the amino acid content of the stomach increased, while that of the intestine, spleen, and kidneys decreased. Ultrasound at 3 w/cm^2 for 5 min produced the greatest changes in the organis studied. A weaker dose (0.3 w/cm^2) had much less effect, even when continued for a much longer period of time.

1/1

APPROVED FOR RELEASE: 07/20/2001 CIA-RDP86-00513R002200730009-8"

"APPROVED FOR RELEASE: 07/20/2001 CIA-RDP86-00513R002200730009-8

UNCLASSIFIED PROCESSING DATE--17JUL70

TITLE--ON THE NERVOUS SYSTEM ROLE IN THE MECHANISM OF MEDICINAL MUD EFFECT ON THE PROCESSES OF RESORPTION IN THE INTESTINE -U-

AUTHOR--GREBNEVA, L.S., FAYTELBERGBLANK, V.R.

COUNTRY OF INFO--USSR

SOURCE--FIZIOLOGICHNIY ZHURNAL, 1970, VOL 16, NR 1, PP 90-95

DATE PUBLISHED--------70

SUBJECT AREAS--BIOLOGICAL AND MEDICAL SCIENCES

TOPIC TAGS--DOG, CENTRAL NERVOUS SYSTEM, SKIN, REFLEX, SMALL INTESTINE, SPINAL CORD, BRAIN, CEREBRAL CORTEX

CONTROL MARKING--NO RESTRICTIONS

DOCUMENT CLASS--UNCLASSIFIED

PROXY REEL/FRAME--1982/0908 STEP NO--UR/0238/70/016/001/0090/0095

CIRC ACCESSION NO--AP0052326

UNCLASSIFIED

APPROVED FOR RELEASE: 07/20/2001 CIA-RDP86-00513R002200730009-8"

"APPROVED FOR RELEASE: 07/20/2001 CIA-RDP86-00513R002200730009-8

Acc. Nr. AP0052326 Ref. Code: UR0238

PRIMARY SOURCE: Fiziologichniy Zhurnal, 1970, Vol 16, Nr 1, pp 90-95

ON THE NERVOUS SYSTEM ROLE IN THE MECHANISM OF MEDICINAL MUD EFFECT ON THE PROCESSES OF RESORPTION IN THE INTESTINE

L. S. Grebneva, V. R. Faytelberg-Blank

Department of Pathologic Physiology, Agricultural Institute, Odessa

Summary

On 72 dogs with an isolated intestinal loop according to Thiry the role of the nervous system in the mechanism of medicinal mud effect on the processes of resorption in the intestine was studied.

The authors found out that medicinal mud changes the processes of resorption in the intestine with the participation of higher divisions of the central nervous system

1/2

REEL/FRAME
19820908

2

APPROVED FOR RELEASE: 07/20/2001 CIA-RDP86-00513R002200730009-8"

"APPROVED FOR RELEASE: 07/20/2001 CIA-RDP86-00513R002200730009-8

AP0052326

and vegetative nervous system. Besides the authors propose as a guide the scheme of the reflex arc under effect of medicinal mud on the processes of resorption in the intestine: 1 — skin exteroceptors; 2 — intestine interoceptors; 3 — fibres of the vegetative nervous system, 4 — spinal cord pathways, 5 — brain stem reticular formation, 6 — subcortical nervous formations, 7 — cortex, 8 — efferent pathways, 9 — effector — small intestine.

3/3

19820909

APPROVED FOR RELEASE: 07/20/2001 CIA-RDP86-00513R002200730009-8"

"APPROVED FOR RELEASE: 07/20/2001 CIA-RDP86-00513R002200730009-8

1/2 028 UNCLASSIFIED PROCESSING DATE--20NOV70

TITLE--PHYSIOLOGICAL MECHANISMS OF THE EFFECT OF HIGH FREQUENCY PHYSICAL AGENTS ON DIGESTION -U-

AUTHOR--FAYTELBERGBLANK, V.R.

F

COUNTRY OF INFO--USSR

SOURCE--PHYSIOLOGICAL MECHANISMS OF THE EFFECT OF HIGH FREQUENCY PHYSICAL AGENTS ON DIGESTION (FIZIOLOGICHESKIYE MEKHANIZMY DEYSTVIYA

DATE PUBLISHED--------70

SUBJECT AREAS--BIOLOGICAL AND MEDICAL SCIENCES

TOPIC TAGS--ELECTROMAGNETIC BIOLOGIC EFFECT, DIGESTIVE SYSTEM, ENDOCRINE SYSTEM

CONTROL MARKING--NO RESTRICTIONS

DOCUMENT CLASS--UNCLASSIFIED

PROXY REEL/FRAME--3003/1255 STEP NO--UR/0000/70/000/000/0001/0170

CIRC ACCESSION NO--AM0130251

UNCLASSIFIED

APPROVED FOR RELEASE: 07/20/2001 CIA-RDP86-00513R002200730009-8"

"APPROVED FOR RELEASE: 07/20/2001 CIA-RDP86-00513R002200730009-8

2/2 028 UNCLASSIFIED PROCESSING DATE--20NOV70

CIRC ACCESSION NO--AM0130251

ABSTRACT/EXTRACT--(U) GP-0- ABSTRACTS. TABLE OF CONTENTS: INTRODUCTION 3. CHAPTER I PHYSICAL AND BIOPHYSICAL CHARACTERISTICS OF HIGH FREQUENCY OSCILLATIONS 7. II THE EFFECT OF HIGH FREQUENCY PHYSICAL AGENTS ON FUNCTIONS OF DIGESTIVE ORGANS 35. III THERAPEUTIC EFFECT OF HIGH FREQUENCY OSCILLATIONS ON DISEASES OF DIGESTIVE ORGANS 60. IV ROLE OF THE NERVOUS SYSTEM IN MECHANISM OF THE EFFECT OF HIGH FREQUENCY OSCILLATIONS ON DIGESTIVE PROCESSES 82. V PARTICIPATION OF ENDOCRINE GLANDS IN THE MECHANISM OF THE EFFECT OF HIGH FREQUENCY PHYSICAL AGENTS ON DIGESTION 110. CONCLUSION 120. BIBLIOGRAPHY 123. THE AUTHOR AND HIS COWORKERS CONDUCTED EXTENSIVE EXPERIMENTAL INVESTIGATIONS AND CLINICAL OBSERVATIONS OF THE EFFECT OF VARIOUS DOSES OF ELECTROMAGNETIC FIELDS ON FUNCTIONS OF DIGESTIVE ORGANS IN NORMAL CONDITIONS AND IN VARIOUS PATHOLOGICAL CONDITIONS OF THE ORGANISM. THEY STUDIES THE ROLE OF THE NERVOUS SYSTEMS AND ENDOCRINE GLANDS IN THE EFFECT OF HIGH FREQUENCY ELECTROMAGNETIC FIELD ON DIGESTIVE PROCESSES. THE BOOK CONTAINS A DETAILLD REVIEW OF SOVIET AND FOREIGN WORKS ON THE EFFECT OF ELECTROMAGNETIC FIELDS ON DIGESTIVE ORGANS IN EXPERIMENTAL AND CLINCIAL CONDITIONS.

UNCLASSIFIED

APPROVED FOR RELEASE: 07/20/2001 CIA-RDP86-00513R002200730009-8"

"APPROVED FOR RELEASE: 07/20/2001 CIA-RDP86-00513R002200730009-8

F

USSR UDC 612.215.5.014.424

FAYTEL'BERG-BLANK, V. R., and RAKHMAN, F. I., Chair of Pathological Physiology, Odessa Agricultural Institute

"Changes in Pleural Absorbing Ability Under the Influence of High-Frequency Electromagnetic Oscillation on the Organism"

Kiev, Fiziolohichnyy Zhurnal, Vol 16, No 3, May/Jun 70, pp 379-384

Abstract: The pleural absorbing activity of 123 dats subjected to varying intensity and duration of electromagnetic fields and ultrasound was studied, using the method of radioactive indication. Radioactive phosphorus was administered into the pleural cavity in a dose of 22.5 micro curie/kg and absorption was determined after periods ranging from 3 to 120 min in blood from an ear vein. The effect of the field, of the microwaves and of the ultrasound was investigated. Also the distribution of P^{32} was determined in liver, kidneys, spleen and lungs. It was shown that shifts in pleural absorbing function depend on the intensity and duration of the electromagnetic oscillations and on the physical characteristics of the agent.

1/1

APPROVED FOR RELEASE: 07/20/2001 CIA-RDP86-00513R002200730009-8"

"APPROVED FOR RELEASE: 07/20/2001 CIA-RDP86-00513R002200730009-8

USSR

UDC 669.15--194.56:620.186.1

LANSKAYA, K. A., KAMENSKAYA, N. I., FAYVILEVICH, G. A., and BUTNEVA, N. I., Central Scientific Research Institute of Ferrous Metallurgy imeni I. P. Bardin

"The Effect of Boron on the Distribution and Quantity of Carbide Phases in Austenite Steel"

Moscow, Metallovedeniye i Termicheskaya Obrabotka Metallov, No 10, 1972, pp 43-45

Abstract: Boron added in different amounts to 1Kh14N18V2B heat-resistant austenite steel influences the distribution, size, and quantity of NbC particles in the steel. Addition of 0.005, 0.017, and 0.1% B leads to coagulation of NbC particles and changes their shape from rodlike to spheroidal. When the concentration of B reaches 0.26% the coagulated NbC particles are dissolved and Nb becomes a part of the solid solution. The presence of 0.005, 0.017, and 0.26% B decreases the concentration of C from 69 to 28 atomic % and increases the concentration of Cr from 8 to 51 atomic %. This decreases the concentration of $M_{23}C_6$ in steel and increases the amount of Cr in borides. Evidently part of C in $M_{23}C_6$ becomes substituted with B. In addition to borides the boron forms a eutectic structure in this steel at high temperature (1300°C). The quantity and composition

APPROVED FOR RELEASE: 07/20/2001 CIA-RDP86-00513R002200730009-8"

"APPROVED FOR RELEASE: 07/20/2001 CIA-RDP86-00513R002200730009-8

USSR

LANSKAYA, K. A., et al., Metallovedeniye i Termicheskaya Obrabotka Metallov, No 10, 1972, pp 43-45

of borides in the eutectic structure is determined by the concentration of boron. In the presence of 0.017% B the boride phase M_3B_2 is formed; when the concentration of B reaches 0.017-0.1%, M_3B_2 and M_2B are formed. The phase M_2B is formed when the concentration of B exceeds 0.1%. The eutectic structure in the steel under consideration consisted of a mixture of NbC and borides.

2/2

APPROVED FOR RELEASE: 07/20/2001 CIA-RDP86-00513R002200730009-8"

"APPROVED FOR RELEASE: 07/20/2001 CIA-RDP86-00513R002200730009-8

Transformation and Structure

USSR UDC 669.14.018.8:621.181.4

FAYVILEVICH, G. A., MEL'KUMOV, I. N., and VINOGRAD, M. I., TsNIIChERMET /Central Scientific Research Institute of Ferrous Metallurgy/, Elektrostal' (Electric Steel) Plant

"Structural Transformations in 1Kh15N5AM2 Steel During Heating and Cooling"

Moscow, Metallovedeniye i Termicheskaya Obrabotka Metallov, No 1, 1971, pp 36-38

Abstract: The authors studied the structure of 1Kh15N5AM2 (EP310) steel in a high-temperature microscope during heating to 1300° C and cooling to room temperature. Steel containing 0.14% C, 14.6% Cr, 4.5% Ni, 2.4% Mo, 0.08% N, smelted in an open electric arc furnace and after electroslag refining, was used for the study. The microstructure was studied by the methods of standard light and color metallography. It was found that delta ferrite is formed during high-temperature heating of the steel, beginning at 1200° C for electric-arc smelted metal and at 1250° C for electroslag-refined metal. The delta phase develops in the form of round grains in the open electric-arc smelted steel, in the form of prisms or plates in the electroslag-refined

1/2

APPROVED FOR RELEASE: 07/20/2001 CIA-RDP86-00513R002200730009-8"

"APPROVED FOR RELEASE: 07/20/2001 CIA-RDP86-00513R002200730009-8

USSR

FAYVILEVICH, G. A., et al., Metallovedeniye i Termicheskaya Obrabotka Metallov, No 1, 1971, pp 36-38

metal. The difference in the character of delta ferrite formation during high-temperature heating is due to the fact that during the heating of open-smelting metal there is a more uniform process of delta ferrite formation as a result of the presence of delta ferrite nuclei in liquation sectors enriched with ferrite-forming elements, while in the electroslag-refined metal, owing to its great homogeneity, the delta ferrite appears along crystallographic planes of the austenite. The transformation of austenite to martensite in specimens cooled to room temperature after heating to 1300° C takes place in the same temperature range regardless of the smelting method, although the electroslag metal contains somewhat more martensite. This apparently is due to the large volume of metal with a uniform concentration of alloying elements, corresponding to axes of dendrites after electroslag refining.

S. S. KOL'BE and YU. I. SMIRNOV took part in the work, and the color etching was done by N. I. BUTNEVA.

2/2

APPROVED FOR RELEASE: 07/20/2001 CIA-RDP86-00513R002200730009-8"

"APPROVED FOR RELEASE: 07/20/2001 CIA-RDP86-00513R002200730009-8

USSR UDC 612.822-06:612.118.24-06:616.895.87-085.1

FOKINA, A. V., and FAYVISHEVSKIY, V. A., Institute of Psychiatry, Academy of Medical Sciences, USSR, Moscow

"On the Question of the Specificity and Site of Action of the Blood Serum of Schizophrenics on the Brain of Experimental Animals"

Moscow, Zhurnal Nevropatologii i Psikhiatrii imeni S. S. Korsakov, Vol 73, Vyp 8, 1973, pp 1228-1232

Abstract: The changes in the primary response of the visual region of the cerebral cortex to light flashes in cats into whose brains the serum of psychotic patients had been introduced was studied. The serum of nuclear schizophrenic patients caused a sharp rise in the amplitude of the negative phase of the primary response, in contrast to that of normal people, or those with Picks disease, which caused a decrease, and that of epileptics, which caused no change. The nonhomogeneity of the epileptic group, as indicated by a larger variation of results, is said to explain the latter finding, with the presence of an antagonist to the normal activity also suggested. The presence of electrodes in the posterior hypothalamus and the brain stem appeared to inhibit the action of the abnormal metabolites in the schizophrenics' serum.

1/1

APPROVED FOR RELEASE: 07/20/2001 CIA-RDP86-00513R002200730009-8"

"APPROVED FOR RELEASE: 07/20/2001 CIA-RDP86-00513R002200730009-8

1/2 019 UNCLASSIFIED PROCESSING DATE--27NOV70

TITLE--EMPIRICAL DETERMINATION OF ALPHA AMINE CONTAINING SUBSTANCES PRODUCED BY ACTINOMYCETES -U-

AUTHOR--FAYZIYEV, I.

F

COUNTRY OF INFO--USSR

SOURCE--DOKL. AKAD. NAUK TADZH. SSR 1970, 13(2), 55-7

DATE PUBLISHED-------70

SUBJECT AREAS--BIOLOGICAL AND MEDICAL SCIENCES

TOPIC TAGS--ACTINOMYCES, AMINE DERIVATIVE, BIOSYNTHESIS

CONTROL MARKING--NO RESTRICTIONS

DOCUMENT CLASS--UNCLASSIFIED

PROXY REEL/FRAME--3002/1602 STEP NO--UR/0425/70/013/002/0055/0057

CIRC ACCESSION NO--AT0128992

UNCLASSIFIED

APPROVED FOR RELEASE: 07/20/2001 CIA-RDP86-00513R002200730009-8"

"APPROVED FOR RELEASE: 07/20/2001 CIA-RDP86-00513R002200730009-8

2/2 019 UNCLASSIFIED PROCESSING DATE--27NOV70

CIRC ACCESSION NO--AT0128992

ABSTRACT/EXTRACT--(U) GP-0- ABSTRACT. THE NINHYDRIN REACTION WAS USED FOR THE PRELIMINARY SELECTION OF HIGH PRODUCTIVE STRAINS OF ACTINOMYCETES. ACCUMULATION OF NINHYDRIN POS. COMPDS. IN THE CULTURE LIQ. REACHED MAX. AFTER 15-20 DAYS OF CULTIVATION. FACILITY: TADZH. NAUCH.-ISSLED. INST. POCHVOVED., USSR.

UNCLASSIFIED

APPROVED FOR RELEASE: 07/20/2001 CIA-RDP86-00513R002200730009-8"

"APPROVED FOR RELEASE: 07/20/2001 CIA-RDP86-00513R002200730009-8

1/2 024 UNCLASSIFIED PROCESSING DATE--20NOV70

TITLE--THE SYNDROME OF COCCYGODYNIA IN OSTEOCHONDROSIS OF THE LUMBAR REGION OF THE SPINE -U-

AUTHOR-(04)-YUNASHEV, G.S., YELIZAROV, M.N., VARSHAVICHIK, F.P., FAYZIYEV, KH.E.

COUNTRY OF INFO--USSR

F

SOURCE--KLINICHESKAYA MEDITSINA, 1970, VOL 48, NR 6, PP 116-119

DATE PUBLISHED--------70

SUBJECT AREAS--BIOLOGICAL AND MEDICAL SCIENCES

TOPIC TAGS--BONE DISEASE, PAIN, MEDICAL EXAMINATION, DIAGNOSTIC MEDICINE

CONTROL MARKING--NO RESTRICTIONS

DOCUMENT CLASS--UNCLASSIFIED

PROXY REEL/FRAME--3002/1881 STEP NO--UR/0497/70/048/006/0116/0119

CIRC ACCESSION NO--AP0129241

UNCLASSIFIED

APPROVED FOR RELEASE: 07/20/2001 CIA-RDP86-00513R002200730009-8"

"APPROVED FOR RELEASE: 07/20/2001 CIA-RDP86-00513R002200730009-8

2/2 024 UNCLASSIFIED PROCESSING DATE--20NOV70

CIRC ACCESSION NO--AP0129241

ABSTRACT/EXTRACT--(U) GP-0- ABSTRACT. THE CONTROVERSIAL OPINIONS OF SOVIET AND FOREIGN AUTHORS ON THE ORIGIN OF COCCYGEAL PAIN TESTIFY TO THE FACT THAT IT IS STILL INADEQUATELY STUDIED. LITERATURE SOURCES GIVE NO DATA ON THE RELATION OF COCCYGODYNIA WITH OSTEOCHONDROSIS OF THE LURNBAR REGION OF THE SPINE. IN 15 (13PERCENT) OUT OF 114 PATIENTS UNDER OBSERVATION COCCYGODYNIA WAS OF A SOMEWHAT DIFFERENC CHARACTER THAN THAT DESCRIBED IN OTHER SOURCES. THUS, COCCYGEAL PAIN WAS COMBINED WITH PAIN IN THELUMBOSACRAL REGION; IT WAS ASSOCIATED WITH MOVEMENTS AND NOTICABLY INTENSIFIED IN INDUCTION OF SYMPTOMS OF STRETCHING THE NERVE TRUNKS. IN SINGLE PURPOSE EXAMINATIONOF THE PATIENTS THE AUTHORS DIAGNOZED OSTEOCHONDROSIS OF THE LUMBAR REGION OF THE SPINE. THE DIAGNOSIS WAS CONFIRMED BY MEANS OF EPIDUROGRAPHY AND DISCOGRAPHY. AFTER CONSERVATIVE TREATMENT OF LUMBAR OSTEOCHONDROSIS A SIGNIFICANT IMPROVEMENT OCCURRED IN ALMOST ALL PATIENTS AND THEY RESUMED THEIR WORK. THE AUTHORS ARE OF THE OPINION THAT COCCYGODYNIA MAY BE ONE OF THE SYMPTOMS OF OSTEOCHONDROSIS OF THE LUMBAR REGION OF THE SPINE.

FACILITY: KAFEDRA TRAVMATOLOGII I ORTOPEDII I MOSKOVSKOGO MEDITSINSKOGO INSTITUTA IM SECHENOVA, NEVROLOGICHESKOYE OTDELENIYE GORODSKOY KLINICHESKOY BOL'NITSY NO 67 RENTGENODIAGNOSTICHESKIY OTDEL MOSKOVSKOGO NAUCHNO-ISSLED. RENTGENO-RADIOLOGICHESKOGO INSTITUTA I UZBEKSKOGO NAUCHNO ISSLED. RETGENO-RADIOLOGICHESKOGO I ONKOLOGICHESKOGO INSTITUTA.

UNCLASSIFIED

APPROVED FOR RELEASE: 07/20/2001 CIA-RDP86-00513R002200730009-8"

"APPROVED FOR RELEASE: 07/20/2001 CIA-RDP86-00513R002200730009-8

USSR UDC 531.787.913.087.92

ATAKULOV, B.A., AFUZOV, A.YA., BILYALOV, E.I., OLIMOV, KH., FAYZIYEV, P.R.

"Concerning Strain Resistivity Properties Of p-Type Films Of GeTe and PbTe"

Dokl. AN UzSSR (Proceedings Of The Academy Of Sciences, Uzbek SSR), 1972, No 2, pp 30-31 (from RZh:Elektronika i yeye primeneniye, No 7, July 1972, Abstract No 7B378)

Translation: An experimental study is made of the dependence of resistance on strain [deformatsiya] during compression and expansion, for polycrystalline films of GeTe and PbTe deposited by thermal evaporation in a vacuum of 10^{-4} mm of mercury on a 3 x 10 x 0.018 mm^3 paper substrate. In the absence of strain, the resistivity of the GeTe and PbTe films equals, respectively, 1.4 and 0.3 ohm.cm. 6 ref. V.K.

1/1

APPROVED FOR RELEASE: 07/20/2001 CIA-RDP86-00513R002200730009-8"

"APPROVED FOR RELEASE: 07/20/2001 CIA-RDP86-00513R002200730009-8

FAYZULAYEV, V.N.

JPRS 57906

4 January 1973

FORMATION OF AN INVERSION IN A CO_2-H_2O-N_2 GAS MIXTURE [illegible]
EXPANDING [illegible]

[illegible]

1. Introduction

In [1, 2], a report was made on the first experiments with respect to CO_2-H_2O-N_2 gas dynamic lasers. Recently, experimental studies were made of gas dynamic lasers with a high water content in the mixture to a concentration ratio of $[CO_2]/[H_2O] = 1$ [3]. In contrast to the experiments performed with ordinary supersonic nozzles having angles of opening of 10-15 degrees [1, 2], rapid cooling of the gas in [3] was realized during expansion through a [illegible] nozzle with an angle of opening of 60 degrees which we shall call a slit. The utilization of a slit in the given case obviously insured higher initial cooling rates than in [1, 2].

In reference [4], a study was made of the oscillatory relaxation of a CO_2 molecule in CO_2-N_2-He and CO_2-N_2 mixtures with free gas dynamic divergence simulating escape from a slit. However, comparison of these calculations with the experimental data of [5] indicated more the qualitative than the quantitative agreement. Accordingly, in this paper, the relaxation kinetics were calculated for the CO_2-H_2O-N_2 mixture with more correct consideration of the gas dynamics of escape from a slit.

2. Relaxation Kinetics in a CO_2-H_2O-N_2 Mixture

According to the known classification given in the survey [6] and [illegible] on the basis of the results of references [7-9], it is possible to separate the following basic energy exchange channels in oscillatory-oscillatory [illegible] and oscillatory-translational V-T processes defining the mode relaxation kinetics of the CO_2 molecule in the CO_2-H_2O-N_2 mixture:

[I - USSR - L]

APPROVED FOR RELEASE: 07/20/2001 CIA-RDP86-00513R002200730009-8"