"APPROVED FOR RELEASE: 07/20/2001 CIA-RDP86-00513R002201210012-0

USSR

UDC 541.136

KAMINSKAYA, YE. A., UFLYAND, N. YU., ROZENTSVEYG, S. A. (deceased)
Scientific Research Institute of Storage Cells, Leningrad

"Behavior of Higher Nickel Oxides in KOH Solutions Containing Lithium"

Moscow, Elektrokhimiya, Vol 7, No 12, Dec 71, pp 1839-1841

Abstract: The activating action of lithium towards the nickel oxide electrode at room temperature increases with increased quantity of the adsorbed lithium, until the atomic ratio of Li/Ni approaches 0.05-0.06. With higher lithium content in the electrode, lithium nickelate is formed. The appearance of this new structure decreases the depth of the charge on nickel oxides, lowering the coefficient of the utilization of nickel. The electrochemical behavior of nickel oxide electrodes in KOH solutions containing lithium depends basically on the quantity of lithium adsorbed by the higher nickel oxides. Lithium ion adsorption rate increases with the increase in the concentration of KOH and LiOH in the electrolyte.

1/1

APPROVED FOR RELEASE: 07/20/2001 CIA-RDP86-00513R002201210012-0"

"APPROVED FOR RELEASE: 07/20/2001 CIA-RDP86-00513R002201210012-0

USSR

KAMINSKENYE, B. A.

"Some Estimates for Restoration Function"

Lit. mat. sb. [Lithuanian Mathematics Collection], Vol 11, No 3, 1971, pp 563-568, (Translated from Referativnyy Zhurnal, Kibernetika, No 3, 1972, Abstract No 3 V109 by the author).

Translation: It is proven that the residual term in the asymptotic expansion of a restoration function decreases exponentially when the distribution function $F(x)$ of restoration time where $x > 0$ satisfies the condition $1 - F(x) \leq Ke^{-\lambda x}$, where $0 \leq K < \infty$, $\lambda > 0$ are constant.

1/1

APPROVED FOR RELEASE: 07/20/2001 CIA-RDP86-00513R002201210012-0"

"APPROVED FOR RELEASE: 07/20/2001 CIA-RDP86-00513R002201210012-0

USSR

KAMINSKENE, B.

"Local Limit Theorems for Restoration Processes"

Lit. Mat. Sb. [Lithuanian Mathematics Journal], 1973, Vol 13, No 2, pp 55-70 (Translated from Referativnyy Zhurnal Kibernetika, No 10, 1973, Abstract No 10V41)

Translation: Local limit theorems are proven for both discrete and continuous restoration processes $N(t)$ in the case when the random quantities defining these processes are not identically distributed, and also when there is a finite number of different distributions. Asympotitc expansions are produced for the probabilities $P\{N(t) = n\}$ where $n \to \infty$ evenly with respect to all t. Author's view

1/1

APPROVED FOR RELEASE: 07/20/2001 CIA-RDP86-00513R002201210012-0"

"APPROVED FOR RELEASE: 07/20/2001 CIA-RDP86-00513R002201210012-0

USSR

UDC 548.0+535.35

BAGDASAROV, CH. S., KAMINSKIY, A. A., KEVORKOV, A. M., PROKHOROV, A. M. (Academician) SARKISOV, S. E., and TEVOSYAN, T. A., Institute of Crystallography, imeni A. Z. Shubnikov and Physical Institute imeni P. N. Lebedev, USSR Academy of Sciences, Moscow

"Laser Properties of a Y_2SiO_5-Nd^{3+} Crystal in Radiation at $^4F_{3/2} \rightarrow {}^4I_{11/2}$ and $^4F_{3/2} \rightarrow {}^4I_{13/2}$ Transitions"

Moscow, Doklady Akademii Nauk SSSR, Vol 212, No 6, 1973, pp 1326-1327

Abstract: The crystals were formed in a 1:1 oxide system of Y_2O_3-SiO_2. They are biaxial and positive with $N_g = 1.825$ and $N_p = 1.807$. Their melting point is 1980±30°C and the optical range of transparency extends from about 0.18 to about 4.9 μ at a sample thickness of about 1mm. Pulse-stimulated radiation was recorded at 300°K and 77°K in the spectral regions of 1.075 μ for the first transition and 1.36 μ for the second. Attempts to obtain $^4F_{3/2} \rightarrow {}^4I_{9/2}$ transitions at 77°K were unsuccessful. Analysis of the spectra of absorption and

1/2

APPROVED FOR RELEASE: 07/20/2001 CIA-RDP86-00513R002201210012-0"

"APPROVED FOR RELEASE: 07/20/2001 CIA-RDP86-00513R002201210012-0

USSR

BAGDASAROV, CH. S., et al., Doklady Akademii Nauk SSSR, Vol 212, No 6, 1973, pp 1326-1327

luminescence showed that the Nd^{3+} ions enter into the composition of a minimum of two types of activated sensors, which result, with the measurements made, cast serious doubt on the results reported by Arsenev, Raiskaya, and Sviridovaya in Phys. Stat. Sol., No 13, 1972.

2/2

APPROVED FOR RELEASE: 07/20/2001 CIA-RDP86-00513R002201210012-0"

"APPROVED FOR RELEASE: 07/20/2001 CIA-RDP86-00513R002201210012-0

USSR UDC 539.89

ALEKSANDROV, V. I., KAMINSKIY, A. A., MAKSIMOVA, G. V., PROKHOROV, A. M. (Academician), SARKISOV, S. E., SOBOL', A. A., TATARINTSEV, V. M., Physical Institute imeni P. N. Lebedev, and Institute of Crystallography imeni A. V. SHUBNIKOV, Academy of Sciences of the USSR, Moscow

"A Study of Stimulated Emission by Nd^{3+} Ions in Crystals at the $^4F_{3/2} \rightarrow {}^4I_{13/2}$ Transition"

Moscow, Doklady Akademii Nauk SSSR, Vol 211, No 3, 21 Jul 73, pp 567 - 570

Abstract: The prevailing transition for neodymium is $^4F_{3/2} \rightarrow {}^4I_{11/2}$ (about 60%), but the transition to $^4I_{13/2}$ is of both practical and theoretical interest. The authors studied doped crystals of CaF_2-YF_3, $Ca_2Y_5F_{19}$, $Ca_5(PO_4)_3F$, ZrO_2-Y_2O_3, and HfO_2-Y_2O_3. Samples were tested at 77°K and 300°K. Laser action was observed at three frequencies near 1.35 microns in yttrofluorite, at two points in tysonite, and at several locations in fluorapatite with a 90° angle between the optical and geometric axes. Analysis of the low-temperature spectra showed that in all observations their lines were insensitive to concentration.

The cubic crystals of ZrO_2-Y_2O_3 and HfO_2-Y_2O_3 with Nd^{3+} ions showed very

APPROVED FOR RELEASE: 07/20/2001 CIA-RDP86-00513R002201210012-0"

"APPROVED FOR RELEASE: 07/20/2001 CIA-RDP86-00513R002201210012-0

USSR UDC: 621.378.325

BODRETSOVA, A. I., BAGDASAROV, Kh. S., KAMINSKIY, A. A., KIRILLOVA, N. N., LEVIKOV, S. I. (deceased)

"Powerful Laser With Pyrolamp-Illuminator Based on $Y_3Al_5O_{12}$-Nd^{3+}"

Moscow, Kvantovaya Elektronika, Sbornik Statey, No 2(8), 1972, pp 107-108

Abstract: A brief description is given of a quasicontinuous laser with pyrolamp-illuminator based on $Y_3Al_5O_{12}$-Nd^{3+} with output emission energy of about 1 J at 300°K on a wavelength of 1.064 μm. Lasers with pyrotechnic stimulation have the highest ratio of emission energy to weight. The authors thank A. M. Kevorkov for growing the garnet crystals, and V. N. Gardash'yan for furnishing the calorimeter. One illustration, bibliography of six titles.

1/1

APPROVED FOR RELEASE: 07/20/2001 CIA-RDP86-00513R002201210012-0"

"APPROVED FOR RELEASE: 07/20/2001 CIA-RDP86-00513R002201210012-0

USSR

UDC 621.375.82

BODRETSOVA, A. I., BAGDASAROV, Kh. S., KAMINSKIY, A. A., KIRILLOVA, N. N., and LEVIKOV, S. I.

"Powerful Laser With Pyrolamp Illuminator of the Material $Y_3Al_5O_{12}$-Nd^{3+}"

V sb. Kvant. elektronika (Quantum Electronics -- Collection of Works), No 2, Moscow, "Sov. radio," 1972, pp 107-108 (from RZh-Fizika, No 10, Oct 72, Abstract No 10D910)

Translation: A quasi-continuous laser with a pyrolamp illuminator of the material $Y_3Al_5O_{12}$-Nd^{3+} with an output generation energy of about 1 joule at 300°K at the wavelength 1.064 μ is briefly described. Lasers with pyrotechnic excitation have the highest generation energy-to-weight ratio. 6 ref. Authors abstract.

1/1

APPROVED FOR RELEASE: 07/20/2001 CIA-RDP86-00513R002201210012-0"

"APPROVED FOR RELEASE: 07/20/2001 CIA-RDP86-00513R002201210012-0

USSR

UDC 621.375.82

KAMINSKIY, A. A.

"Migration or 'Induced Discharge'?"

V sb. Peredacha energii v kondensirovan. sredakh (Energy Transfer in Condensed Media -- Collection of Works), Yerevan, 1970, pp 102-108 (from RZh-Fizika, No 7, Jul 71, Abstract No 7D1031)

Translation: The correctness of measurements of the excitation migration rate is condensed media in an induced radiation mode is discussed. It is shown that migration and "induced discharge" are competing processes in the deactivation of the excited state in media with heterogeneous broadening of a line in an induced radiation mode. An evaluation of the contributions of migration and induced radiation to the rate of deactivation of the excited state is given using the example of the metastable state $^4F_{3/2}$ for Nd^{+3} ions in LGS-5 and LGS-50 glasses. Numerical calculations show that the situation can easily arise in lasers when the excitation energy is transferred into a channel of induced radiation basically by means of "induced discharge." The conclusions of the paper agree with the results of other studies. 12 ref. S. G. P.

1/1

APPROVED FOR RELEASE: 07/20/2001 CIA-RDP86-00513R002201210012-0"

"APPROVED FOR RELEASE: 07/20/2001 CIA-RDP86-00513R002201210012-0

1/2 026 UNCLASSIFIED PROCESSING DATE--18SEP70

TITLE--SPECTROSCOPIC PROPERTIES OF KY (MOO SUB4) SUB2 SINGLE CRYSTALS ACTIVATED BY ND PRIME3 POSITIVE -U-

AUTHOR-(03)-KAMINSKIY, A.A., PAVLYUK, A.A., KLEVTSOV, P.V.

COUNTRY OF INFO--USSR

SOURCE--OPT. SPEKTROSK. 1970, 28(2), 292-6

DATE PUBLISHED--------70

SUBJECT AREAS--MATERIALS, PHYSICS

TOPIC TAGS--SINGLE CRYSTAL, SPECTROSCOPIC ANALYSIS, LUMINESCENCE, CALCIUM COMPOUND, TUNGSTEN COMPOUND, MOLYBDENUM COMPOUND, NEODYMIUM

CONTROL MARKING--NO RESTRICTIONS

DOCUMENT CLASS--UNCLASSIFIED

PROXY REEL/FRAME--1984/0089 STEP NO--UR/0051/70/028/002/0292/0296

CIRC ACCESSION NO--AP0054886

UNCLASSIFIED

APPROVED FOR RELEASE: 07/20/2001 CIA-RDP86-00513R002201210012-0"

"APPROVED FOR RELEASE: 07/20/2001 CIA-RDP86-00513R002201210012-0

2/2 026 UNCLASSIFIED PROCESSING DATE--18SEP70

CIRC ACCESSION NO--AP0054886

ABSTRACT/EXTRACT--(U) GP-0- ABSTRACT. ABSORPTION AND LUMINESCENCE SPECTRA OF KY (MOO SUB4) SUB2 SINGLE CRYSTALS, CONTG. UP TO 10 AT. PERCENT ND PRIME3 POSITIVE WERE DETD. AT 300 AND 77DEGREESK; A DETAILED ANAL. OF THE SPECTRAL TERMS IS PRESENTED. ND IONS OCCUPIED Y LOCATIONS, AND ONLY 1 TYPE OF ACTIVATING CENTERS WAS OBSD. THE ENVIRONMENT OF ND PRIME3 POSITIVE IN KY (MOO SUB4) SUB2 CRYSTALS RESEMBLED THAT IN CAWO SUB4 CRYSTALS. THE LIFETIMES OF THE EXCITED STATES, DETD. AT 300 AND 77DEGREESK, DECREASED SHARPLY WHEN THE ND PRIME3 POSITIVE CONCN. WAS GREATER THAN 2.5PERCENT. A SIMILAR PATTERN WAS OBSD. FOR THE LINEWIDTHS OF THE MOST INTENSE LUMINESCENCE TRANSITIONS, PRIME4 J SUBTHREE-HALVES YIELDS PRIME4 I SUBELEVEN-HALVES, WHICH INCREASED SHARPLY WITH THE ND CONCN. ABOVE 2.5 AT. PERCENT.

UNCLASSIFIED

APPROVED FOR RELEASE: 07/20/2001 CIA-RDP86-00513R002201210012-0"

"APPROVED FOR RELEASE: 07/20/2001 CIA-RDP86-00513R002201210012-0

1/2 038 UNCLASSIFIED PROCESSING DATE--18SEP70

TITLE--SPECTROSCOPIC INVESTIGATION OF THE INDUCED RADIATION OF A LASER BASED ON SRF2 AND ND(3POSITIVE) CRYSTALS (TYPE 1) -U-

AUTHOR-(02)-KAMINSKIY, A.A., LI, L.

K

COUNTRY OF INFO--USSR

SOURCE--ZHURNAL PRIKLADNOI SPEKTROSKOPII, VOL. 12, JAN. 1970, P. 35-40

DATE PUBLISHED----JAN70

SUBJECT AREAS--PHYSICS

TOPIC TAGS--LASER RADIATION, SPECTROSCOPY, CRYSTAL ABSORPTION, CRYSTAL LUMINESCENCE, STRONTIUM COMPOUND, FLUORIDE, YTTRIUM COMPOUND, NEODYMIUM

CONTROL MARKING--NO RESTRICTIONS

DOCUMENT CLASS--UNCLASSIFIED

PROXY REEL/FRAME--1979/1608 STEP NO--UR/0368/70/012/000/0035/0040

CIRC ACCESSION NO--AP0047930

UNCLASSIFIED

APPROVED FOR RELEASE: 07/20/2001 CIA-RDP86-00513R002201210012-0"

"APPROVED FOR RELEASE: 07/20/2001 CIA-RDP86-00513R002201210012-0

2/2 038 UNCLASSIFIED PROCESSING DATE--18SEP70

CIRC ACCESSION NO--AP0047930

ABSTRACT/EXTRACT--(U) GP-0- ABSTRACT. HIGH TEMPERATURE SPECTROSCOPIC STUDY OF THE STIMULATED RADIATION, LUMINESCENCE, AND ABSORPTION SPECTRUM OF STRONTIUM FLUORIDE CRYSTALS CONTAINING TRIVALENT NEODIMIUM CATIONS. AT A TEMPERATURE OF 500DEGK, A LASER ACTION OF THESE CRYSTALS IS ESTABLISHED AT A WAVELENGTH OF ABOUT 10,446 A IN ADDITION TO TWO EMISSION LINES RECORDED PREVIOUSLY AT ROOM TEMPERATURE. THE HIGH TEMPERATURE LIMIT OF LASER ACTION IS DETERMINED FOR THESE CRYSTALS. THE EFFECT OF PHOTOREDUCTION OF TRIVALENT NEODIMIUM CATIONS INTO BIVALENT CATIONS IN STRONTIUM FLUORIDE BY UV LIGHT IS DETECTED AND STUDIED. THE POSSIBILITY OF OBTAINING A LASER ACTION IN MIXED STRONTIUM YTTRIUM FLUORIDE CRYSTALS CONTAINING TRIVALENT NEODIMIUM CATIONS IS ANALYZED.

UNCLASSIFIED

APPROVED FOR RELEASE: 07/20/2001 CIA-RDP86-00513R002201210012-0"

"APPROVED FOR RELEASE: 07/20/2001 CIA-RDP86-00513R002201210012-0

1/2 036 UNCLASSIFIED PROCESSING DATE--18SEP70

TITLE--SPECTROSCOPIC AND GENERATION STUDIES OF CRYSTALLINE COMPOUNDS IN THE CALCIUM OXIDE AND NIOBIUM PENTOXIDE SYSTEM CA(NBO SU83)2 AND ND

AUTHOR-(02)-KAMINSKIY, A.A., LI, L.

K

COUNTRY OF INFO--USSR

SOURCE--IZV. AKAD. NAUK SSSR, NEORG. MATER. 1970, 6 (2) 294-306

DATE PUBLISHED--------70

SUBJECT AREAS--PHYSICS, CHEMISTRY

TOPIC TAGS--CALCIUM OXIDE, SPECTROSCOPIC ANALYSIS, CRYSTAL STRUCTURE, NIOBIUM OXIDE, RADIATION EFFECT

CONTROL MARKING--NO RESTRICTIONS

DOCUMENT CLASS--UNCLASSIFIED

PROXY REEL/FRAME--1988/0545 STEP NO--UR/0363/70/006/002/0294/0306

CIRC ACCESSION NO--AP0105530

UNCLASSIFIED

APPROVED FOR RELEASE: 07/20/2001 CIA-RDP86-00513R002201210012-0"

"APPROVED FOR RELEASE: 07/20/2001 CIA-RDP86-00513R002201210012-0

2/2 036 UNCLASSIFIED PROCESSING DATE--18SEP70

CIRC ACCESSION NO--AP0105530

ABSTRACT/EXTRACT--(U) GP-0- ABSTRACT. THE CA(NBO SUB3)2 CRYSTALS ACTIVATED BY ND PRIME3 POSITIVE WERE STUDIED. COMPLEX SPECTROSCOPIC ANAL. AND INDUCED IRRADN. MADE IT POSSIBLE TO DET. THE POSITION OF THE STARK LEVELS OF THE ND PRIME3 POSITIVE ION IN THE CA(NBO SUB3)2 CRYSTAL. THE SPECTROSCOPIC INVESTIGATIONS PERFORMED CONFIRMED THE EXISTENCE IN THE CA(NBO SUB3)2 NEGATIVE ND PRIME3 POSITIVE CRYSTALS OF SEVERAL TYPES OF ACTIVATOR CENTERS. THEIR DIVERSE PROPERTIES ARE MENTIONED. THE FUNDAMENTAL PARAMETERS OF THE INDUCED IRRADN. RELATIVE TO THE CRYSTALS STUDIED WERE INVESTIGATED AT 77-650PERCENT. IMPORTANT SPECTROSCOPIC AND GENERATION CHARACTERISTICS OF THE CA(NBO SUB3)2 NEGATIVE ND PRIME3 POSITIVE CRYSTAL WERE MEASURED AND CALCD.

UNCLASSIFIED

APPROVED FOR RELEASE: 07/20/2001 CIA-RDP86-00513R002201210012-0"

"APPROVED FOR RELEASE: 07/20/2001 CIA-RDP86-00513R002201210012-0

1/2 033 UNCLASSIFIED PROCESSING DATE--20NOV70

TITLE--INORGANIC LASER MATERIALS WITH IONIC STRUCTURES -U-

AUTHOR-(02)-KAMINSKIY, A.A., OSIKO, V.V.

K

COUNTRY OF INFO--USSR

SOURCE--AKADEMIIA NAUK SSSR, IZVESTIIA, NEORGANICHESKIE MATERIALY, VOL 6, APR. 1970, P. 629-696

DATE PUBLISHED--------70

SUBJECT AREAS--PHYSICS

TOPIC TAGS--CRYSTAL LASER, LASER ACTIVE MATERIAL, IONIC CRYSTAL, CRYSTAL GROWING, FLUORIDE, OXIDE, GARNET, RUBY

CONTROL MARKING--NO RESTRICTIONS

DOCUMENT CLASS--UNCLASSIFIED

PROXY REEL/FRAME--3004/0367 STEP NO--UR/0363/70/006/000/0629/0696

CIRC ACCESSION NO--AP0131454

UNCLASSIFIED

APPROVED FOR RELEASE: 07/20/2001 CIA-RDP86-00513R002201210012-0"

"APPROVED FOR RELEASE: 07/20/2001 CIA-RDP86-00513R002201210012-0

2/2 033 UNCLASSIFIED PROCESSING DATE--20NOV70

CIRC ACCESSION NO--AP0131454

ABSTRACT/EXTRACT--(U) GP-0- ABSTRACT. REVIEW OF RECENT LITERATURE CONCERNING INORGANIC LASER MATERIALS CONTAINING IONIC CRYSTALLINE STRUCTURES. AMONG THE TOPICS COVERED ARE THE LATEST DEVELOPMENTS IN THE PHYSICS OF SOLID STATE LASERS (NONLINEAR ACTIVATED CRYSTALS, COMBINED ACTIVE MEDIA, SOLID SOLUTIONS WITH DISORDERED STRUCTURES, AND ENERGY TRANSFER IN LASER CRYSTALS), THE PROPERTIES OF A LARGE NUMBER OF IONIC LASER MATERIALS, AND TECHNIQUES FOR PREPARING THEM. FLUORIDES, OXIDES, RUBY CRYSTALS, GARNET CRYSTALS AND OXYGEN CONTAINING COMPLEX COMPOUNDS ARE DISCUSSED SPECIFICALLY. FACILITY: AKADEMIIA NAUK SSSR, INSTITUT KRISTALLOGRAFII, MOSCOW, USSR. FACILITY: AKADEMIIA NAUK SSSR, FIZICHESKII INSTITUT, MOSCOW, USSR.

UNCLASSIFIED

APPROVED FOR RELEASE: 07/20/2001 CIA-RDP86-00513R002201210012-0"

"APPROVED FOR RELEASE: 07/20/2001 CIA-RDP86-00513R002201210012-0

1/2 046 UNCLASSIFIED PROCESSING DATE--13NOV70

TITLE--SPECTRAL STATE OF LASER RADIATION FROM CAWO SUB4 ND PRIME 3 POSITIVE CRYSTALS -U-

AUTHOR--KAMINSKIY, A.A.

COUNTRY OF INFO--USSR

SOURCE--IZV. AKAD. NAUK SSSR, NEORG. MATER. 1970, 6(2), 396-7

DATE PUBLISHED--------70

SUBJECT AREAS--PHYSICS

TOPIC TAGS--CRYSTAL LASER, TUNGSTATE, CALCIUM COMPOUND, CRYSTAL IMPURITY, NEODYMIUM, LASER RADIATION SPECTRUM, LOW TEMPERATURE PROPERTY

CONTROL MARKING--NO RESTRICTIONS

DOCUMENT CLASS--UNCLASSIFIED

PROXY REEL/FRAME--1996/1425 STEP NO--UR/0363/70/006/002/0396/0397

CIRC ACCESSION NO--AP0118414

UNCLASSIFIED

APPROVED FOR RELEASE: 07/20/2001 CIA-RDP86-00513R002201210012-0"

"APPROVED FOR RELEASE: 07/20/2001 CIA-RDP86-00513R002201210012-0

2/2 046 UNCLASSIFIED PROCESSING DATE--13NOV70

CIRC ACCESSION NO--AP0118414

ABSTRACT/EXTRACT--(U) GP-0- ABSTRACT. THE LASER RADIATION (PRIME4 F SUBTHREE HALVES YIELDS PRIME4 I SUBELEVEN HALVES) BASED ON CAWO SUB4-ND PRIME3 POSITIVE CRYSTALS WAS INVESTIGATED. SAMPELS OF "ZERO ORIENTATION" (C AXIS PARALLEL TO THE GEOMETRICAL F AXIS OF THE RODS), GROWN BY THE CZOCHRALSKI METHOD WITH VARIOUS COMPENSATORS (NA PRIME POSITIVE, NB PRIME5 POSITIVE) AND ADDNL. IMPURITIES OF SEVERAL ELEMENTS (MN, NI, Y, AND CR) WERE STUDIED. THE RESULTS OBTAINED AT 300DEGREESK WITH CAWO SUB4-ND PRIME3 POSITIVE CRYSTALS ARE IN AGREEMENT WITH THE PREVIOUSLY REPORTED RESULTS; HOWEVER, THE LOW TEMP. (77DEGREESK) RESULTS DIFFER SOMEWHAT. THIS DISCREPANCY IN THE RESULTS IS PROBABLY DUE TO THE SLIGHT DIFFERENCE IN THE PROPERTIES OF THE SAMPLES STUDIED. ADDNL. DOPING OF THE CAWO SUB4-ND PRIME3 POSITIVE CRYSTALS WITH MN, NI, Y, OR CR HAS NO MARKED EFFECT ON THE SPECTRAL COMPN. OF THE STIMULATED EMISSION. FACILITY: INST. KRISTALLOGR., MOSCOW, USSR.

UNCLASSIFIED

APPROVED FOR RELEASE: 07/20/2001 CIA-RDP86-00513R002201210012-0"

"APPROVED FOR RELEASE: 07/20/2001 CIA-RDP86-00513R002201210012-0

1/2 058 UNCLASSIFIED PROCESSING DATE--13NOV70

TITLE--EFFECTS OF UV SWITCHING OFF OF STIMULATED EMISSION IN A LASER BASED ON CRYSTALS WITH ND,3 POSITIVE, IONS -U-

AUTHOR--KAMINSKIY, A.A.

COUNTRY OF INFO--USSR

SOURCE--AKADEMIIA NAUK SSSR, IZVESTIIA, NEORGANICHESKIE MATERIALY, VOL. 6, MAR. 1970, P. 601-603

DATE PUBLISHED----MAR70

SUBJECT AREAS--PHYSICS

TOPIC TAGS--STIMULATED EMISSION, SOLID STATE LASER, CRYSTAL IMPURITY, UV IRRADIATION, RADIATION EFFECT, NEODYMIUM, NIOBATE, TUNGSTATE, ALUMINATE, CADMIUM FLUORIDE

CONTROL MARKING--NO RESTRICTIONS

DOCUMENT CLASS--UNCLASSIFIED

PROXY REEL/FRAME--1996/1426 STEP NO--UR/0363/70/006/000/0601/0603

CIRC ACCESSION NO--AP0118415

UNCLASSIFIED

APPROVED FOR RELEASE: 07/20/2001 CIA-RDP86-00513R002201210012-0"

"APPROVED FOR RELEASE: 07/20/2001 CIA-RDP86-00513R002201210012-0

2/2 058 UNCLASSIFIED PROCESSING DATE--13NOV70

CIRC ACCESSION NO--AP0118415

ABSTRACT/EXTRACT--(U) GP-0- ABSTRACT. STUDY OF CUTOFF OF STIMULATED EMISSION IN A LASER BASED ON CRYSTALS DOPED WITH ND(3 POSITIVE) IONS SUBJECTED TO UV IRRADIATION. AN ATTEMPT IS MADE TO ELUCIDATE THE MECHANISM OF THIS EFFECT. CRYSTALS CONSIDERED INCLUDE CA(NBO3)2, CAWO4, Y3A15O12, LINBO2, AND CDF2-YF3. THE RESULTS OBTAINED ARE COMPARED WITH THOSE DESCRIBED BY ASHKIN ET AL. (1966). FACILITY: AKADEMIIA NAUK SSSR, INSTITUT KRISTALLOGRAFII, MOSCOW, USSR.

UNCLASSIFIED

APPROVED FOR RELEASE: 07/20/2001 CIA-RDP86-00513R002201210012-0"

"APPROVED FOR RELEASE: 07/20/2001 CIA-RDP86-00513R002201210012-0

USSR

UDC 621.791:539.378.3:62-225:62.19

KULIK, S. G., KAMINSKIY, A. M., and OZEROV, Ye. A., Engineers, and KVASNITSKIY, V. F., Candidate of Engineering Sciences

"Effectiveness of Nozzle Blades Made by Diffusion Welding Through an Intermediate Layer"

Moscow, Svarochnoye Proizvodstvo, No 1, Jan 73, pp 32-34

Abstract: The purpose of this work was to investigate the efficiency of full-scale nozzle blades produced by vacuum-diffusion welding through an intermediate metal layer. The usual method of welding, in which the metals being joined are melted, such as high-alloy heat-resistant alloys EP99, VKh4A, E1602, etc., results in the formation of hot cracks in the seam metal and heat-affected zone. For intermediate layers VPr7 and VPr11 brazing alloys and 1Kh18N9T steel were used which were 0.1 mm thick.

The welded blades were subjected to both thermal cycling and mechanical loads of 3000 cycles and 16 or 22 kgf/mm^2, respectively. Results of these tests showed that damage characteristic of thermal fatigue was not detected when the samples were subjected only to thermal cycling; however, when subjected

1/2

APPROVED FOR RELEASE: 07/20/2001 CIA-RDP86-00513R002201210012-0"

"APPROVED FOR RELEASE: 07/20/2001 CIA-RDP86-00513R002201210012-0

USSR

KULIK, S. G., et al., Svarochnoye Proizvodstvo, No 1, Jan 73, pp 32-34

to both conditions the samples exhibited some cleavage. Of the three materials tested as intermediate welding strips, 1Kh18N9T steel showed the best results, with VPr7 brazing alloy coming in last. Five figures, 1 table, 4 bibliographic references.

2/2

APPROVED FOR RELEASE: 07/20/2001 CIA-RDP86-00513R002201210012-0"

"APPROVED FOR RELEASE: 07/20/2001 CIA-RDP86-00513R002201210012-0

USSR UDC 621.438-226.1.001.24:539.319

STEL'MASHUK, V. N., and KAHINSKIY, A. M.

"Estimation of the Adaptability of Turbine Blades"

Kiev, Problemy Prochnosti, No 1, Jan 72, pp 17-21

Abstract: An attempt is undertaken to evaluate the efficiency of turbine blades produced from plastics, under conditions of nonsteady regimes on the basis of the theory of adaptability. The article deals with the problem of evaluating the adaptability of turbine blades (solid and hollow), under the influence of temperature fields and mechanical loads acting during starting, steady operation, and stopping. On the basis of analytic representation of the shape of the profile and the temperature field, approximate expressions of the stresses in the blade were obtained. It is shown that evaluation of the adaptability is reduced to checking, at the danger point, the sign of the complexes composed of coefficients of the expressions for the stresses and safety characteristics of the material. Two figures, 6 references.

1/1

APPROVED FOR RELEASE: 07/20/2001 CIA-RDP86-00513R002201210012-0"

"APPROVED FOR RELEASE: 07/20/2001 CIA-RDP86-00513R002201210012-0

+ b

USSR UDC 547.63 + 547.562.4'562.1

GITIS, S. S., SEINA, Z. N., KAMINSKAYA, E. G., IVANOVA, V. M., BELOBRAGINA, V. V., SOSONKIN, I. M., and KAMINSKIY, A. YA., VNIPIM [All-Union Scientific Research and Planning Institute of (unknown; possibly Monomers)], Tula, and CHIKURINA, L. V., VNIIV [All-Union Scientific Research Institute of Synthetic Fibers]

"p,p'-Bis-(carboxyphenylsulfonyl)-diphenyl Oxide and Some of Its Derivatives -- Monomers for the Production of Thermostable Fibers"

Moscow, Khimicheskiye Volokna, No 1, 1971, pp 45-47

Abstract: The article suggests the synthesis of new monomers, viz. derivatives of p,p'-bis-(carboxyphenylsulfonyl)-diphenyl oxide, for the production of thermostable polymer materials. A study of the first stage of the synthesis -- tosylation of diphenyl ether -- showed that the process yields two principal products whose elementary composition corresponds to the general formula $CH_3-Ar-SO_2-Ar-O-Ar-SO_2-Ar-CH_3$, as well as a third substance whose composition corresponds to the composition

1/2

APPROVED FOR RELEASE: 07/20/2001 CIA-RDP86-00513R002201210012-0"

"APPROVED FOR RELEASE: 07/20/2001 CIA-RDP86-00513R002201210012-0

USSR

GITIS, S. S., et al., Khimicheskiye Volokna, No 1, 1971, pp 45-47

of the monotosylation product $Ar-O-Ar-SO_2-Ar-CH_3$. The structure of the synthesized products was confirmed by IR and electron spectroscopy, as well as polarography. Fibers based on the resultant monomers are strong and elastic.

2/2

APPROVED FOR RELEASE: 07/20/2001 CIA-RDP86-00513R002201210012-0"

"APPROVED FOR RELEASE: 07/20/2001 CIA-RDP86-00513R002201210012-0

1/2 022 UNCLASSIFIED PROCESSING DATE--20NOV70

TITLE--PHOTOMETRIC DETERMINATION OF THE TOTAL CONTENT OF TRI AND TETRANITRODIPHENYL SULFONES IN 3,3 PRIME DINITRODIPHENYL SULFONE -U-

AUTHOR-(04)-KAMINSKIY, A.YA., BRONSHTEYN, E.A., GITIS, S.S., IVANOV, A.V.

COUNTRY OF INFO--USSR

SOURCE--ZAVOD. LAB. 1970, 36(2), 155-8 (RUSS)

DATE PUBLISHED--------70

SUBJECT AREAS--CHEMISTRY

TOPIC TAGS--PHOTOMETRIC ANALYSIS, BENZENE DERIVATIVE, AROMATIC NITRO COMPOUND, SULFONE

CONTROL MARKING--NO RESTRICTIONS

DOCUMENT CLASS--UNCLASSIFIED

PROXY REEL/FRAME--2000/2144 STEP NO--UR/0032/70/036/002/0155/0158

CIRC ACCESSION NO--AP0125727

UNCLASSIFIED

APPROVED FOR RELEASE: 07/20/2001 CIA-RDP86-00513R002201210012-0"

"APPROVED FOR RELEASE: 07/20/2001 CIA-RDP86-00513R002201210012-0

2/2 022 UNCLASSIFIED PROCESSING DATE--20NOV70

CIRC ACCESSION NO--AP0125727

ABSTRACT/EXTRACT--(U) GP-0- ABSTRACT. THE TOTAL AMT. OF TRINITRODIPHENYL SULFONE (I) AND TETRANITRODIPHENYL SULFONE (II) IN 3,3 PRIME DINITRODIPHENYL SULFONE (III) CAN BE DETD. AFTER DISSOLVING A 0.01 G SAMPLE IN 7 ML ME SUB2 CO AND ADDING 3 ML 50PERCENT AQ. NH SUB4 OH. THE ABSORBANCE OF THE COLORED SOLN. (ABSORPTION MAX. 605 AND 520 NM FOR I AND 520 AND 610 NM FOR II) WAS MEASURED 20-30 MIN AFTER ITS PREPN. IN 2 CM CUVETTES. BY USING THE ABOVE METHOD IT WAS FOUND THAT III CONTAINS 0.3-0.4PERCENT OF THE TRI AND TETRANITRODIPHENYL SULFONES.

FACILITY: VES. NAUCH. ISSLED. PROEKT. INST. MONOMER., TULA, USSR.

UNCLASSIFIED

APPROVED FOR RELEASE: 07/20/2001 CIA-RDP86-00513R002201210012-0"

"APPROVED FOR RELEASE: 07/20/2001 CIA-RDP86-00513R002201210012-0

1/2 041 UNCLASSIFIED PROCESSING DATE--11SEP70

TITLE--PREPARATION OF GASOLINE WITH AN OCTANE NUMBER OF 95 IN AN INDUSTRIAL CATALYTIC REFORMING PLANT -U-

AUTHOR--IVANYUKOV, D.V., KAMINSKIY, E.F., MASLYANSKIY, G.N., FEDOROV, A.P., SHAPIRO, R.N.

COUNTRY OF INFO--USSR

SOURCE--KHIM. TEKHNOL. TOPL. MASEL 1970, 15(3), 1-5

DATE PUBLISHED--------70

SUBJECT AREAS--PROPULSION AND FUELS

TOPIC TAGS--GASOLINE, FUEL OCTANE RATING, CATALYTIC CRACKING, ALUMINUM OXIDE, OXIDE CATALYST, PLATINUM CATALYST, HIGH PRESSURE EFFECT, CHEMICAL REACTION RATE, CHLORINE, PETROLEUM CATALYTIC REFORMING

CONTROL MARKING--NO RESTRICTIONS

DOCUMENT CLASS--UNCLASSIFIED

PROXY REEL/FRAME--1990/2042 STEP NO--UR/0065/70/015/003/0001/0005

CIRC ACCESSION NO--AP0109974

UNCLASSIFIED

APPROVED FOR RELEASE: 07/20/2001 CIA-RDP86-00513R002201210012-0"

"APPROVED FOR RELEASE: 07/20/2001 CIA-RDP86-00513R002201210012-0

2/2 041 UNCLASSIFIED PROCESSING DATE--11SEP70

CIRC ACCESSION NO--AP0109974

ABSTRACT/EXTRACT--(U) GP-0- ABSTRACT. THE PROCESS AND THE PLANT WERE MODERNIZED BY USING PT-AL SUB2 O SUB3 CATALYST PROMOTED WITH CL INSTEAD OF F, WHOSE ACTIVITY WAS MAINTAINED BY ADDN. OF ORG. CL COMPDS. IN THE REACTION ZONE. A GREATER AROMATIZATION OF THE PARAFFINIC STOCK WAS REACHED AS THE AMT. OF H SUB2 O IN THE REACTION ZONE WAS REDUCED BY EVAPG. THE WATER FROM THE HYDROFINED GASOLINE STOCK AND DRYING THE RECYCLE GASES WITH MOL. SIEVES. A PRESSURE DECREASE TO 20 ATM INCREASED THE YIELD OF GASOLINE WITH RESEARCH OCTANE NO. 95. A 3RD STAGE REACTOR WAS ADDED, DISTRIBUTING THE CATALYST IN THE QUANT. RATIO 1:2:4 IN THE 3 REACTORS, RESP.

ZZZZZZZZZZZZ UNCLASSIFIED

APPROVED FOR RELEASE: 07/20/2001 CIA-RDP86-00513R002201210012-0"

"APPROVED FOR RELEASE: 07/20/2001 CIA-RDP86-00513R002201210012-0

1/2 013 UNCLASSIFIED PROCESSING DATE--02OCT70

TITLE--OXIDATIVE REGENERATION OF A PLATINUM REFORMING CATALYST -U-

AUTHOR-(05)-MASLYANSKIY, G.N., IVANYUKOV, D.V., KAMINSKIY, E.F., FEDOROV, A.P., SHIPIKIN, V.V.

COUNTRY OF INFO--USSR

SOURCE--KHIM. TEKHNOL. TOPL. MASEL 1970, 15(3) 5-8

DATE PUBLISHED--------70

SUBJECT AREAS--CHEMISTRY

TOPIC TAGS--CATALYST REGENERATION, PLATINUM, HYDROCARBON COMBUSTION/(U)AP64 CATALYST

CONTROL MARKING--NO RESTRICTIONS

DOCUMENT CLASS--UNCLASSIFIED

PROXY REEL/FRAME--1992/1492 STEP NO--UR/0065/70/015/003/0005/0008

CIRC ACCESSION NO--AP0112486

UNCLASSIFIED

APPROVED FOR RELEASE: 07/20/2001 CIA-RDP86-00513R002201210012-0"

"APPROVED FOR RELEASE: 07/20/2001 CIA-RDP86-00513R002201210012-0

2/2 013 UNCLASSIFIED PROCESSING DATE--02OCT70

CIRC ACCESSION NO--AP0112486

ABSTRACT/EXTRACT--(U) GP-0- ABSTRACT. TO MINIMIZE THE LOSS OF CL IN PT-AL SUB2 O SUB3 CATALYST AP64 PROMOTED WITH CL, THE SYSTEM WAS EVACUATED TO 50-60 MM BEFORE REGENERATION. DURING REGENERATION, H SUB2 O FORMED WAS REMOVED FROM THE CIRCULATING GASES. THE DURATION OF THE 1ST REGENERATION STEP OF HYDORCARBON COMBUSTION WAS GREATLY REDUCED. THE AMT. OF H SUB2 O FORMED DURING REGENERATION WAS THUS DECREASED.

UNCLASSIFIED

APPROVED FOR RELEASE: 07/20/2001 CIA-RDP86-00513R002201210012-0"

"APPROVED FOR RELEASE: 07/20/2001 CIA-RDP86-00513R002201210012-0

USSR UDC: 621.385.6

KAMINSKIY, F. D., KASHIRIN, A. P., LELIOVSKIY, A. F., MATROSOV, Ye. I., RYABININ, V. A., TERRA, K. R.

"An Electronic SHF Device"

Moscow, Otkrytiya, Izobreteniya, Promyshlennyye Obraztsy, Tovarnyye Znaki, No 32, 1970, Soviet Patent No 270093, Class 21, field 17 Jul 67, pp 215-216

Abstract: This Author's Certificate introduces: 1. An electronic SHF device (such as a triode) containing an electron-optical system which is part of the vacuum input and half-wave short-circuited output (anode) resonators and which is made in the form of individual cells, each consisting of a cathode and grid operating into a common anode. As a distinguishing feature of the patent, the reliability is improved and the output power of the device is increased by making vacuum-tight coupling apertures for energy output in one of the walls of the output resonator located at a high-frequency voltage node symmetric with the axis of the device. 2. A modification of this device in which the distinguishing feature is that control of the width of the frequency passband is provided by installing a rotating disc at the energy output point on the axis of the device with apertures identical in size and shape to the coupling apertures, and in the same position relative to the axis of the device.

1/1

APPROVED FOR RELEASE: 07/20/2001 CIA-RDP86-00513R002201210012-0"

"APPROVED FOR RELEASE: 07/20/2001 CIA-RDP86-00513R002201210012-0

USSR UDC 621.385.4.029.64

KAMINSKIY, I.I., PASS, M.I., SHEPSENVOL, M.A.

"Some Problems Of Optimum Design Of Broad-Band Microwave Transmitting Tetrodes"

Elektron. tekhnika. Nauchno-tekhn. sb. Generatorn., modulyatorn i rentgen. pribory (Electronics Technology. Scientific-Technical Collection. Transmitter, Modulator, And X-Ray Devices), 1969, Issue 3, pp 3-14 (from RZh--Elektronika i yeye primeneniye, No 4, April 1971, Abstract No 4A150)

Translation: Methods are considered for a quantitative evaluation of a number of phenomena influencing the operating effectiveness of transmitting [generatornyy] microwave tetrodes in a regime of broad-band power amplification. A technique is developed for an approximate computation on a digital computer of the equivalent capacitance of the output circuit [kontur] with a complex configuration forming its electrodes, and methods of analysis of transit phenomena in cylindrical designs, with the characteristics of the electron-optical system of the device and the secondary emission effects taken into account. Methods are proposed for determining the optimum output interelectrode separation in a tetrode with the simultaneous effect of a complex of design factors. The computed technique was successfully used during design of microwave tetrodes. 10 ref. Summary.

1/1

APPROVED FOR RELEASE: 07/20/2001 CIA-RDP86-00513R002201210012-0"

"APPROVED FOR RELEASE: 07/20/2001 CIA-RDP86-00513R002201210012-0

KAMINSKIY, I. V.

JPRS - 54173
01 OCT 71

UDC 615.472:615.835.35]:615.462

ANALYSIS OF STRUCTURAL STRENGTH OF THE SHELL OF A THERAPEUTIC PRESSURE CHAMBER BUILT OF ORTHOTROPIC TWO-PLY FIBERGLASS

[Article by I. Ye. Baranik, V.P. Khoroshilov, I.V. Kaminskiy, T.A. Sultanov, and V.P. Balding of the North Donets Branch of the All-Union Scientific Research and Structural Institute of Chemical Engineering and All-Union Scientific Research Institute of Surgical Equipment and Instruments, Moscow; Moscow, Meditsinskaya Tekhnika, Russian, No 3, 1971, pp 29-31]

Steel is the most widely accepted material used for building shells of various types of pressure chambers. The main disadvantage of steel is its weight, which makes its use in clinical conditions difficult. For technological reasons, the use of titanium is limited so far. Thus, the most promising material is fiberglass, because of its light weight, high strength, technological qualities, and low cost. The strength of a pressure chamber shell can be calculated only when certain investigations are carried out in advance.

The fiberglass shell of a pressure chamber is a thin-walled spun shell of positive curvature. In order to join the shell with other subassemblies, metal stiffening rings are installed at each end of the shell. Under the uniform action of inner force loading, plane stress is generated in the shell wall, with the principal stresses oriented along the annular and meridian directions. To best utilize the anisotropy of the fiberglass, the method of separate two-layer longitudinal and transverse winding is used in manufacturing the shell. A layer is the entire thickness of the wall formed by the winding in one direction, irrespective of how many times (prokhodov) the glass fiber is turned around. Longitudinal and transverse winding does not permit obtaining the optimal thickness in a shell of double curvature, inasmuch as, in contrast to the easily obtainable necessary

APPROVED FOR RELEASE: 07/20/2001 CIA-RDP86-00513R002201210012-0"

"APPROVED FOR RELEASE: 07/20/2001 CIA-RDP86-00513R002201210012-0

Acc. Nr: AP0049944 Abstracting Service: CHEMICAL ABST. 5-70 Ref. Code: UR 0314

101317a Liquid-holding properties of some substances dried from organic liquids and water. Kaminskii, I. P.; Bel'dii, V. V.; Dushchenko, V. P.; Sazhin, B. S.; Panchenko, M. S. (USSR). *Khim. Neft. Mashinostr.* 1970, (1), 6-8 (Russ). The heat of vaporization of MeOH, Me_2CO, CCl_4, and H_2O from kaolin, loam, potato starch (I), polycarbonate, poly(vinyl chloride), and chlorendic anhydride was detd. from thermal anal. heating curves of isothermal drying and sorption and adsorption isotherms. All of the materials cited had considerable amts. of adsorbed liqs. The amts. of liqs. retained by the polymers were detd. The sp. heat of vaporization was inversely proportional to temp. Increased temp. had different effects on the polymers, depending on their phys. structure; for instance, in I there was a significant swelling which increased its surface area and the amt. of the liq. retained. CKJR

REEL/FRAME
19801880

7

APPROVED FOR RELEASE: 07/20/2001 CIA-RDP86-00513R002201210012-0"

"APPROVED FOR RELEASE: 07/20/2001 CIA-RDP86-00513R002201210012-0

01/2 022 UNCLASSIFIED PROCESSING DATE--30OCT70

TITLE--LUBRICANT -U-

AUTHOR-(05)-PASEHCNIK, M.S., KAMINSKIY, N.A., OSEYKO, N.I., CHAMIN, I.A., PETROVSKIY, A.A.

COUNTRY OF INFO--USSR

K

SOURCE--U.S.S.R. 266,987

REFERENCE--OTKRYTIYA, IZOBRET., PROM. OBRAZTSY, TOVARNYE ZNAKI 1970,

DATE PUBLISHED--01APR70

SUBJECT AREAS--MATERIALS

TOPIC TAGS--CHEMICAL PATENT, SURFACTANT, METALWORKING LUBRICANT, COLD WORKING, HOT WORKING, VEGETABLE OIL, ESTER

CONTROL MARKING--NO RESTRICTIONS

DOCUMENT CLASS--UNCLASSIFIED

PROXY REEL/FRAME--3003/1805 STEP NO--UR/0482/70/000/000/0000/0000

CIRC ACCESSION NO--AA0130638

UNCLASSIFIED

APPROVED FOR RELEASE: 07/20/2001 CIA-RDP86-00513R002201210012-0"

"APPROVED FOR RELEASE: 07/20/2001 CIA-RDP86-00513R002201210012-0

2/2 022 UNCLASSIFIED PROCESSING DATE--30OCT70

CIRC ACCESSION NO--AA0130638

ABSTRACT/EXTRACT--(U) GP-0- ABSTRACT. A LUBRICANT FOR COLD AND HOT METAL WORKING WAS PREPD. FROM CORIANDER FATTY OIL BY HEAT TREATMENT AT 150-330DEGREES AND 5-500 MM AND MIXING WITH MINERAL OR VEGETABLE OIL OR WITH A SURFACTANT, SUCH AS A SYNTHETIC ESTER.

UNCLASSIFIED

APPROVED FOR RELEASE: 07/20/2001 CIA-RDP86-00513R002201210012-0"

"APPROVED FOR RELEASE: 07/20/2001 CIA-RDP86-00513R002201210012-0

1/2 007 UNCLASSIFIED PROCESSING DATE--30OCT70

TITLE--SEDIMENTATION ANALYSIS OF OIL HYDRATION DEPOSITS -U-

AUTHOR-(03)-IKHNO, N.P., BARTASHEVICH, E.I., KAMINSKIY, N.A.

COUNTRY OF INFO--USSR

SOURCE--MASLO-ZHIR, PROM. 1970, 36(2), 38-40

DATE PUBLISHED--------70

SUBJECT AREAS--EARTH SCIENCES AND OCEANOGRAPHY

TOPIC TAGS--CRUDE OIL, PETROLEUM DEPOSIT, TEST METHOD, SODIUM CHLORIDE

CONTROL MARKING--NO RESTRICTIONS

DOCUMENT CLASS--UNCLASSIFIED

PROXY REEL/FRAME--1996/1560 STEP NO--UR/9085/70/036/002/0038/0040

CIRC ACCESSION NO--AP0118543

UNCLASSIFIED

APPROVED FOR RELEASE: 07/20/2001 CIA-RDP86-00513R002201210012-0"

"APPROVED FOR RELEASE: 07/20/2001 CIA-RDP86-00513R002201210012-0

2/2 007 UNCLASSIFIED PROCESSING DATE--30OCT70

CIRC ACCESSION NO--AP0118543

ABSTRACT/EXTRACT--(U) GP-0- ABSTRACT. THE FRACTIONAL COMPN. OF THE HYDRATION PPT. IS NOT CONST. AND DEPENDS ON THE QUALITY OF THE OIL AND METHOD OF HYDRATION. THE RADIUS OF THE PPTD. PARTICLES IS 0.023-0.006 CM. AND THE RATE OF SETTLING IS 0.9-0.06 M-HR. TREATMENT OF OIL WITH 20PERCENT NACL AFTER HYDRATION INCREASES RATE OF PPTN. 1.5-2 TIMES. THE AMT. OF LARGE PARTICLES OBTAINED BY THIS TREATMENT INCREASES 1.1-2.0 TIMES. FACILITY: GOMEL, ZHIR. KOMB., GOMEL, USSR.

UNCLASSIFIED

APPROVED FOR RELEASE: 07/20/2001 CIA-RDP86-00513R002201210012-0"

"APPROVED FOR RELEASE: 07/20/2001 CIA-RDP86-00513R002201210012-0

AA0040780 KAMINSKIY V.A.

UR 0482

Soviet Inventions Illustrated, Section I Chemical, Derwent,

241576 CONTINUOUS WIRE WELDING NOZZLE was fitted with a current carrying element which consists of a tube 2 filled up with balls 3 and top gland 4. The design ensures low friction resistance as the wire passes through the nozzle and good electrical contact of an external conductor and the wire.

30.1.65 as 940379/25-27. V.N.AGAFONOW et al(10.9.69) Bul 14/18.4.69. Class 21h. Int.Cl.B 23k.

AUTHORS: Agafonov, V. N.; Kobyakov, K. F.; and Kaminskiy, V. A.

1/2

18

19750487

APPROVED FOR RELEASE: 07/20/2001 CIA-RDP86-00513R002201210012-0"

"APPROVED FOR RELEASE: 07/20/2001 CIA-RDP86-00513R002201210012-0

AA0040780

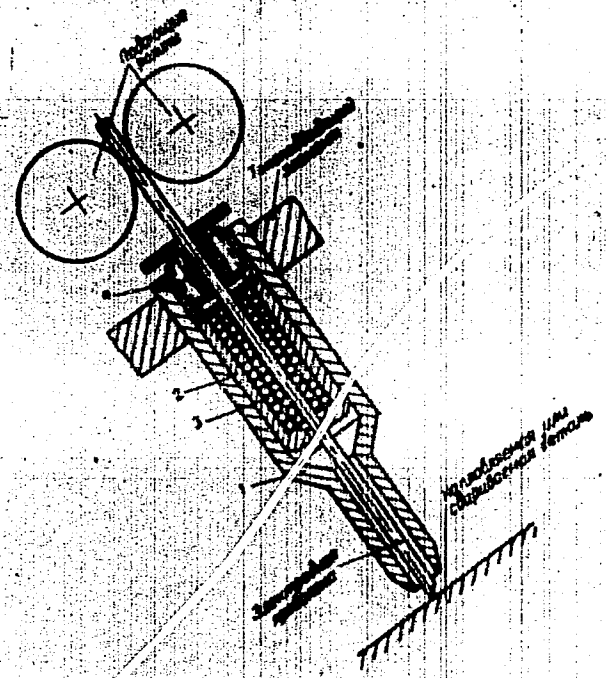

2/2

19750488

APPROVED FOR RELEASE: 07/20/2001 CIA-RDP86-00513R002201210012-0"

"APPROVED FOR RELEASE: 07/20/2001 CIA-RDP86-00513R002201210012-0

Acc. Nr: AP0053437 Abstracting Service: CHEMICAL ABST. 5/70 Ref. Code: UR 0366

KAMINSKIY V.A.

111272w Interaction of 2,2'-methylenedicyclohexanone with primary amines in the presence of carbon tetrachloride [acridinium salts]. Kaminskii, V. A.; Saverchenko, A. N.; Tilichenko, M. N. (Dal'nevost. Gos. Univ., Vladivostok, USSR). *Zh. Org. Khim.* 1970, 6(2), 401–5 (Russ). The title reaction in benzene contg. 2–3 equivs. CCl_4 gave 80–5% substituted *sym*-octahydroacridinium chloride (I) (R is α-naphthyl, β-naphthyl, *p*-

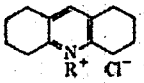

(I)

C_6H_4OMe, $PhCH_2$, Ph, $CHCl_3$, and CH_2Cl_2). The same reaction takes place in pure CCl_4, but the yields are lower. CPJR

REEL/FRAME
19830462

7

APPROVED FOR RELEASE: 07/20/2001 CIA-RDP86-00513R002201210012-0"

"APPROVED FOR RELEASE: 07/20/2001 CIA-RDP86-00513R002201210012-0

1/2 022 UNCLASSIFIED PROCESSING DATE--13NOV70

TITLE--ACTUAL PROBLEMS OF THE ORGANIZATION AND EFFECTIVENESS OF PREHOSPITAL REANIMATION OF PATIENTS WITH MYOCARDIAL INFARCTION -U-

AUTHOR-(03)-ZILBERMAN, D.B., TAIKH, YA.I., KAMINSKIY, V.G.

COUNTRY OF INFO--USSR

SOURCE--KARDIOLOGIYA 10(1): 37-44. 1970

DATE PUBLISHED-------70

SUBJECT AREAS--BIOLOGICAL AND MEDICAL SCIENCES

TOPIC TAGS--HEART DISEASE, RESUSCITATION, FIRST AID

CONTROL MARKING--NO RESTRICTIONS

DOCUMENT CLASS--UNCLASSIFIED

PROXY REEL/FRAME--3004/0547 STEP NO--UR/0495/70/010/001/0037/0044

CIRC ACCESSION NO--AP0131170

UNCLASSIFIED

APPROVED FOR RELEASE: 07/20/2001 CIA-RDP86-00513R002201210012-0"

"APPROVED FOR RELEASE: 07/20/2001 CIA-RDP86-00513R002201210012-0

2/2 022 UNCLASSIFIED PROCESSING DATE--13NOV70

CIRC ACCESSION NO--AP0131170

ABSTRACT/EXTRACT--(U) GP-0- ABSTRACT. DATA RELATIVE TO THE EFFICACY OF PREHOSPITAL REANIMATION OF 139 PATIENTS SUFFERING FROM MYOCARDIAL INFARCTION WERE PRESENTED. SUCCESSFUL REANIMATION WAS EFFECTED IN 43 (30.9PERCENT) PATIENTS, OF WHOM 29 (20.9PERCENT) SURVIVED AND WERE DISCHARGED FROM THE HOSPITAL. ORGAINZATION OF PREHOSPITAL REANIMATION MEASURES WITH THE PARTICIPATION OF THE FOLLOWING GROUPS: PREMEDICAL, GENERAL FIRST AID AMBULANCE TEAM AND SPECIALIZED FOR FIRST AID CARDIOLOGICAL TEAM IS OUTLINED. THE EFFECTIVENESS OF REANIMATION DEPENDING UPON THE PATIENTS' AGE AND THE PRESENCE AND MARKEDNESS OF CIRCULATORY INSUFFICIENCY, PREVIOUS TO CLINICAL DEATH, IS ANALYZED. SUCCESSFUL REANIMATION IS ADVANCED AGE AND IN PRECEDING ACUTE CIRCULATORY INSUFFICIENCY OF MILD AND MODERATE DEGREE CAN BE CARRIED OUT. REAMINATION WAS NOT SUCCESSFUL IN PATIENTS WITH PRECEDING SEVERE CIRCULATORY INSUFFICIENCY. BLOOD ELECTROLYTES IN THE POSTREANIMATION PERIOD WERE STUDIED; THERE WAS SIGNIFICANT DECLINE IN THE BLOOD K LEVEL. K SHOULD BE INTRODUCED IN THE FORM OF A POLARIZING MIXTURE, ESPECIALLY TO PATIENTS WITH AN IRREGULAR CARDIAC THYRHM IN THE POSTREANIMATION PERIOD. PROBLEMS OF INTRACARDIAC INJECTION OF DRUGS AND INTUBATION IN PATIENTS WITH MYOCARDIAL INFARCTION DURING REANIMATION ARE DISCUSSED.

FACILITY: KIEV STA. FIRST MED. AID., KIEV, USSR.

UNCLASSIFIED

APPROVED FOR RELEASE: 07/20/2001 CIA-RDP86-00513R002201210012-0"

"APPROVED FOR RELEASE: 07/20/2001 CIA-RDP86-00513R002201210012-0

AA0044808

KAMINSKIY V.L.

UR 0482

Soviet Inventions Illustrated, Section II Electrical, Derwent,

2/70

243729 PHASE DIFFERENCE METER WITH POINTER INDICATOR contains commutator of input signals (1), generator of commutating impulses (2), input pulse shapers (3) and (4), measuring trigger (5), commutator (6) and pointer indicator (7). In the first half-period of commutation at the instant of passing zero potential the input signals common to both channels are formed by pulse shapers into short impulses which, through commutator (6) synchronized with (1), pass to bases of transistors in trigger (5). The difference in direct components of current impulses on the transistor

1/3

4

19771650

APPROVED FOR RELEASE: 07/20/2001 CIA-RDP86-00513R002201210012-0"

"APPROVED FOR RELEASE: 07/20/2001 CIA-RDP86-00513R002201210012-0

AA0044808

collectors of trigger (5) are at that half-period proportional to channel phase difference, and in the second half-period they are proportional to the sum of input signals phase difference plus channel phase difference. When the period of commutating impulse exceeds 0.1 sec. then, owing to the inertia of the pointer indicator, its readings are

$$\pm \frac{2\pi}{T} \times I \Delta Q$$

where I is amplitude of impulses on indicator T is period of impulse cycles on input of trigger (5). $\Delta \varphi$ is phase difference of input signals,

23.5.67. as 1160599/18-10. V. Ya. Sup'yan & V. L. Kaminskiy Class 21e, 36/03. Int. Cl. G olr

2/3

19771651

APPROVED FOR RELEASE: 07/20/2001 CIA-RDP86-00513R002201210012-0"

"APPROVED FOR RELEASE: 07/20/2001 CIA-RDP86-00513R002201210012-0

AA0044808

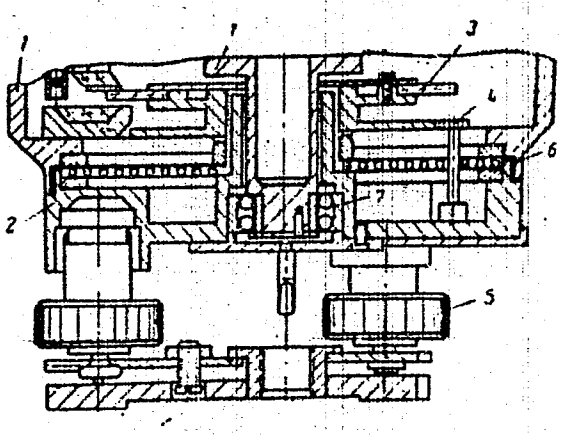

3/3

19771652

APPROVED FOR RELEASE: 07/20/2001 CIA-RDP86-00513R002201210012-0"

"APPROVED FOR RELEASE: 07/20/2001 CIA-RDP86-00513R002201210012-0

USSR

UDC: 612.811

KURCHAVYY, G. G., DAN'KO, S. G., ZUBKOV, A. A., KAMINSKIY, Yu. L., Laboratory of Nerve Cell Physiology of the Institute of Evolutionary Physiology and Biochemistry imeni I. M. Sechenov, Academy of Sciences USSR, Leningrad; Department of Electronic Medical Equipment of the Leningrad "Order of Lenin" Electrical Engineering Institute imeni V. I. Ul'yanov (Lenin)

"A Method of Measuring the Impedance of the Membrane of Motoneurons During Synaptic Actions"

Leningrad, Fiziologicheskiy Zhurnal SSSR, Vol 58, No 8, Aug 72, pp 1309-1312

Abstract: The paper demonstrates the feasibility of separating the postsynaptic potential and the signal induced by variation of the conductivity of the motoneuron membrane. A simplified block diagram of the installation used by the authors to measure curves of transient impedance of the motoneuron membrane is shown in the figure. The object to be studied is connected in the arm of a bridge circuit fed by sinusoidal alternating current. The signals induced in the measurement diagonal of

APPROVED FOR RELEASE: 07/20/2001 CIA-RDP86-00513R002201210012-0"

"APPROVED FOR RELEASE: 07/20/2001 CIA-RDP86-00513R002201210012-0

USSR

KURCHAVYY, G. G. et al., Fiziologicheskiy Zhrunal, Vol 58, No 8, Aug 72, pp 1309-1312

the bridge during stimulation of motoneurons are sent through the phase-sensing detector and then averaged, the sequence of stimuli impinging on the cell being incoherent with the reference current. The use of two phase detectors enables measurement of the cophasal and quadrature components of the transient impedance. Accumulation is used to achieve a usable signal-to-noise ratio. The operation of the synchronization module is described, and errors are analyzed. The maximum relative error of linear interpolation is no more than 5%.

2/3

APPROVED FOR RELEASE: 07/20/2001 CIA-RDP86-00513R002201210012-0"

"APPROVED FOR RELEASE: 07/20/2001 CIA-RDP86-00513R002201210012-0

USSR

KURCHAVYY, G. G. et al., Fiziologicheskiy Zhurnal, Vol 58, No 8, Aug 72, pp 1309-1312

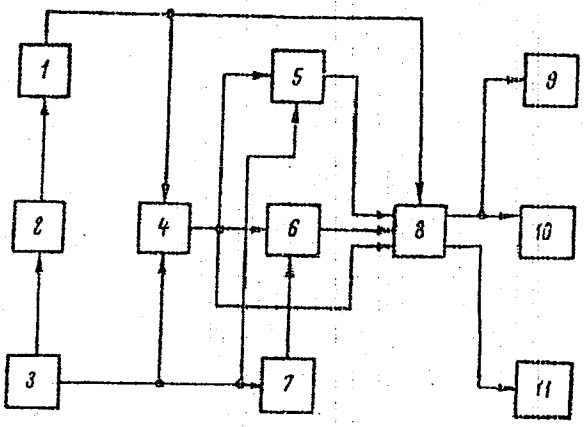

1--stimulator; 2--synchronization module; 3--audio oscillator; 4--bridge measurement circuit; 5, 6--phase detectors; 7--phase shifter; 8--"UM 1NKh" digital computer; 9--oscilloscope; 10--chart recorder; 11--printout

3/3

APPROVED FOR RELEASE: 07/20/2001 CIA-RDP86-00513R002201210012-0"

"APPROVED FOR RELEASE: 07/20/2001 CIA-RDP86-00513R002201210012-0

USSR UDC 51:621.391

BURDZHANADZE, D. A. and KAMKAMIDZE, K. N.

"A New Class of Matrices in Coding Theory"

Tr. Gruz. politekhn. in-t (Transactions, Georgian Polytechnical Institute) No 2(150), 1972, pp 101-105 (from RZh--Matematika, No 10, 1972, Abstract No 10V458)

Translation: Let X be a binary matrix. Twelve symmetrical, non-negative, whole-numbered matrices are introduced: 8 matrices of the $Z \cdot Y$ type, where $Z, Y \in (X, X', \bar{X}, \bar{X}')$ (here, X' is transposed to X while $\bar{X}$ supplements X); and 4 matrices which are the sums of the 8 preceding matrices. Several elementary characteristics of these matrices are given. V. Zinov'yev

1/1

APPROVED FOR RELEASE: 07/20/2001 CIA-RDP86-00513R002201210012-0"

"APPROVED FOR RELEASE: 07/20/2001 CIA-RDP86-00513R002201210012-0

USSR

UDC 51:621.391

BURDZHANADZE, D. A. and KAMKAMIDZE, K. N.

"Square Representations of a Rectangular Matrix"

Tr. Gruz. politekhn. in-t (Transactions, Georgian Polytechnical Institute) No 2(150), 1972, pp 106-111 (from RZh--Matematika, No 10, 1972, Abstract No 10V459)

Translation: In the preceding work of these authors, they introduced (Abstract No 10V458) the so-called metric matrices. Clearly, the original X matrix produces only definite metric matrices. This work considers the problem of the inverse of this statement: i.e., the problem of the one-to-one transition from X to the metric matrices. Such a transition is possible if the equation of the form $EX - XN = T = BI_1 - I_2R$ (here $B = \bar{X}\cdot\bar{X}'$, $R = \bar{X}'\cdot\bar{X}$, $E = X\cdot X' + B$, $N = X'XX + R$ are the metric matrices; I_1 and I_2 are the matrices of the corresponding order from 1) has a unique solution (i.e., if matrices E and N have no general characteristic numbers). A method is proposed for the one-to-one transformation of X to the metrical matrices (one or two of the proper lines is added to X). V. Zinov'yev

1/1

APPROVED FOR RELEASE: 07/20/2001 CIA-RDP86-00513R002201210012-0"

"APPROVED FOR RELEASE: 07/20/2001 CIA-RDP86-00513R002201210012-0

USSR

UDC: 51:621.391

BURDZHANADZE, D. A., KAMKAMIDZE, K. N.

"Square Mappings of a Rectangular Code Matrix"

Tr. Gruz. politekhn. in-t (Works of Georgian Polytechnical Institute), 1972, No 2(150), pp 106-111 (from RZh-Kibernetika, No 10, Oct 72, abstract No 10V459 by V. Zinov'yev)

Translation: In their preceding paper (abst 10V458) the authors introduced so-called metric matrices. Clearly the initial matrix X generates only certain metric matrices. In this paper the question of reversibility of this statement is treated, i. e. the question of a mutually unique transition from X to metric matrices. Such a transition is possible if the equation

$$EX - XN = T = BI_1 - I_2R$$

(here: $B = \overline{X}\cdot\overline{X}'$, $R = \overline{X}'\cdot\overline{X}$, $E = X\cdot X' + B$, $N = X'\cdot X + R$ are metric matrices, I_1, I_2 are matrices of corresponding orders) has a unique solution (i. e. the matrices E and N do not have common eigenvalues). A method is proposed for mutual single-valued

1/2

APPROVED FOR RELEASE: 07/20/2001 CIA-RDP86-00513R002201210012-0"

"APPROVED FOR RELEASE: 07/20/2001 CIA-RDP86-00513R002201210012-0

USSR

BURDZHANADZE, D. A., KAMKAMIDZE, K. N., Tr. Gruz. politekhn. in-t, 1972, No 2(15), pp 106-111

transformation of X to metric matrices (one or two corresponding lines are added to X).

2/2

APPROVED FOR RELEASE: 07/20/2001 CIA-RDP86-00513R002201210012-0"

"APPROVED FOR RELEASE: 07/20/2001 CIA-RDP86-00513R002201210012-0

USSR

UDC: 51:621.391

BURDZHANADZE, D. A., KAMKAMIDZE, K. N.

"On a New Class of Matrices in Coding Theory"

Tr. Gruz. politekhn. in-ta (Works of Georgian Polytechnical Institute), 1972, No 2(150), pp 101-105 (from RZh-Kibernetika, No 10, Oct 72, abstract No 10V458 by V. Zinov'yev)

Translation: Let X be a binary matrix. Twelve symmetric non-negative whole-number matrices are introduced: eight matrices of type $Z \cdot Y$, where $Z, Y \in \{X, X', \bar{X}, \bar{X}'\}$ (here X' is the transpose to X, and $\bar{X}$ is the complement to X), and four matrices which are sums of the eight preceding. Several elementary properties of these matrices are given.

1/1

APPROVED FOR RELEASE: 07/20/2001 CIA-RDP86-00513R002201210012-0"

"APPROVED FOR RELEASE: 07/20/2001 CIA-RDP86-00513R002201210012-0

USSR

UDC 621.357.035.4:621.79.027(088.8)

DAVYDOV, A. D., KAMKIN, A. N., KASHCHEYEV, V.D., MITYASHKIN, D. Z., KLOPOVA, S. V.

"Electrolyte for Electrochemical Machining of Niobium and Its Alloys"

USSR Author's Certificate No 315558, filed 13 Apr 70, published 30 Nov 71 (from RZh-Khimiya, No 12, Jun 72, Abstract No 12L311P)

Translation: An electrolyte has been patented for electrochemical machining of Nb and its alloys. It is distinguished by the fact that in order to increase the process stability and the quality of the surface subjected to anodic solution, a bromide salt, for example, NaBr, a nitrate salt, for example, $NaNO_3$, a base, for example, NAOH, H_3BO_3 and water are introduced into its composition. The components are taken in the following proportions (in % by weight): bromide salt 30-50, nitrate salt 0.5-2, alkali 0.5-2, H_3BO_3 3, the rest water. The proposed electrolyte has been tested on an experimental setup. Flat specimens produced by turning with an area of 8 cm^2 and a class 4-5 surface finish were machined. The machining was carried out in a solution of the following composition (% by weight), KBr 45, $NaNO_3$ 1, KOH 1. The electrode gap is maintained within the limits of 0.3 mm, and the electrolyte pressure at the intake to the operating gap is 8 kg/cm^2. When applying a voltage of 6 volts to the

1/2

APPROVED FOR RELEASE: 07/20/2001 CIA-RDP86-00513R002201210012-0"

"APPROVED FOR RELEASE: 07/20/2001 CIA-RDP86-00513R002201210012-0

USSR

DAVYDOV, A. D., et al., USSR Author's Certificate No 315558, filed 13 Apr 70, published 30 Nov 71

system, destruction of the film of Nb pentoxide takes place, and the current strength increases sharply. The rate of anodic solution increases linearly with an increase in D_a. The BT_a is ~70%. The electrolyte temperature is kept within the limits $20 \pm 3^{\circ}$ by means of a special refrigerating unit. After machining, a smooth light surface with 6-7 class finish was obtained. After passage of 10 a/hour, the pH of the electrolyte decreases from 13 to 9, and the machining quality becomes worse. This can be eliminated by adjusting the electrolyte with alkali, but it is expedient to introduce 3% boric acid into the composition which has a buffering effect and to increase the alkali content to 2% in order not to lower the initial pH value.

2/2

APPROVED FOR RELEASE: 07/20/2001 CIA-RDP86-00513R002201210012-0"

"APPROVED FOR RELEASE: 07/20/2001 CIA-RDP86-00513R002201210012-0

USSR

KAMMATOV, K. K.

UDC 534

"Oscillations in Essentially Nonlinear Nonautonomous Systems"

Tr. In-ta mat. i mekh. AN KazSSR (Works of the Institute of Mathematics and Mechanics. Academy of Sciences Kazakh SSR), 1971, Vol. 2, pp 180-186 (from RZh-Mekhanika, No 12, Dec 71, Abstract No 12A182)

Translation: Oscillations in the essentially nonlinear nonautonomous systems of the type

$$\dot{x}_s = X_{s_0}^{(m_0)}(x_s, y_s) + \mu X_{s_1}^{(m_1)}(\overset{n}{\underset{1}{x_s}}, \overset{n}{\underset{1}{y_s}}, t) + \ldots$$
$$\ldots + \mu f_{s_1}(t) + \ldots$$
$$\dot{y}_s = Y_{s_0}^{(m_0)}(x_s, y_s) + \mu Y_{s_1}^{(m_1)}(\overset{n}{\underset{1}{x_s}}, \overset{n}{\underset{1}{y_s}}, t) + \ldots$$
$$\ldots + \mu \varphi_{s_1}(t) + \ldots$$
$$(s = 1, 2, \ldots, n)$$

are investigated, where X_{si}, Y_{si} (i = 0, 1, ...) are polynomials of any, but finite degree, the coefficients of which (except the case i = 0) and the

1/2

USSR

APPROVED FOR RELEASE: 07/20/2001 CIA-RDP86-00513R002201210012-0"

"APPROVED FOR RELEASE: 07/20/2001 CIA-RDP86-00513R002201210012-0

KAMMATOV, K. K., Tr. In-ta mat. i mekh. AN KazSSR, 1971, Vol. 2, pp 180-186

functions $f_{si}(t)$ and $\phi_{si}(t)$ (i = 1, 2, 3,...) are continuous functions of the period 2π and periodic with respect to t. In addition, X_{s0}, Y_{s0} are homogeneous polynomials not containing linear terms relative to x_s, y_s, and μ is a small positive parameter. Using consecutive transformations, the required system is converted (up to any k-th order with respect to μ) to an autonomous form which is studied in detail by the author (see Tr. In-ta mat. i mekh. AN KazSSR, 1970, Vol. 1, pp 264-269 -- RZhMekh., 1971, Abstract No 5A166). Author's abstract.

2/2

APPROVED FOR RELEASE: 07/20/2001 CIA-RDP86-00513R002201210012-0"

"APPROVED FOR RELEASE: 07/20/2001 CIA-RDP86-00513R002201210012-0

Petroleum Processing Technology

USSR

UDC 699.841

KAMMERER, YU. YU., Engineer

"Seismic Effect of an Earthquake on Pipe Lines"

Moscow, Vodosnabzheniye i Sanitarnaya Tekhnika, No 3, 1972, pp 7-10

Abstract: Equations are given for a detailed analysis of the stress on a buried pipeline, generated by earthquakes. Results of the analysis show that flexible underground installations are more earthquakeproof than those on the surface. Axial deformation caused by the longitudinal waves does the greatest damage. Axial loading is proportional to the modulus of deformation and the displacement velocity of the ground. Gudielines are suggested for earthquakeproofing pipelines.

1/1

APPROVED FOR RELEASE: 07/20/2001 CIA-RDP86-00513R002201210012-0"

"APPROVED FOR RELEASE: 07/20/2001 CIA-RDP86-00513R002201210012-0

USSR

KAMMIN, M. R., GOLDSTEYN, R. DZH. UDC 536.24:532.52

"Heat Exchange Between a Turbulent Air Jet and a Spherical Shell"

V sb. Teplo- i massoperenos. T. 9, Ch. 2 (Heat and Mass Transfer. Vol 9. Part 2), Minsk, 1972, pp 74-89 (from RZh--Mekhanika, No 6, Jun 73, Abstract No 6B804)

Translation: A visual representation of flow and a study of the mean heat transfer inside a hollow sphere with jet blowing of its inside surface were performed. The jet emerges from a long round tube placed inside a sphere and hits part of the sphere at the opposite intake of the tube. The flow field is provisionally divided into zones: 1) free jet hitting the concave surface; 2) wall jet propagated along the inside surface of the sphere; 3) recirculation in the cavity of the sphere; 4) the emergence of the flow near the pipe inlet into the sphere.

On visual representation of the flow, the operating medium was water, and the sphere itself for taking the optical effects was submerged in a plane glass reservoir; the dye was a solution of potassium permanganate sprayed into the right-hand cavity of the sphere. As a result of recirculation and multiple movements of the liquid mass, the entire sphere was filled with colored jets; the exit zone of the flow turned out to be very small. The boundary between it and the recirculation zone pulsed constantly, causing additional mixing of the

1/2

APPROVED FOR RELEASE: 07/20/2001 CIA-RDP86-00513R002201210012-0"

"APPROVED FOR RELEASE: 07/20/2001 CIA-RDP86-00513R002201210012-0

USSR

KAMMIN, M. R., et al. , Teplo- i massoperenos. T. 9, Ch. 2, Minsk, 1972, pp 74 -89

flow between the zones. When studying the heat exchange, tubes were used with a diameter d = 6.34, 9.51 and 12.68 mm with a sphere diameter D_s = 98.9 mm and variable length of the jet b (the distance between the end of the tube and the opposite point of the sphere) in the range of R_d = 14,000-40,000. In order to insure boundary conditions of constancy of the wall temperature T_s = const, the operating element made of thin copper was placed in a reservoir with carefully mixed water heated by a coil. The water temperature drop compared to room temperature was ~ 36 degrees without the blown air, the temperature of which was measured at the exit from the tube T_{b0} and the exit from the sphere T_{bi}. The heat transfer coefficient was calculated with respect to the amount of heat transferred in the sphere to the air, to the logarithmic temperature head and the heat transfer surface. The coefficient of thermal conductivity was calculated by the arithmetic mean temperature $(T_{b0} + T_{bi} + 2T_s)/4$. The bibliography has 11 entries.

2/2

APPROVED FOR RELEASE: 07/20/2001 CIA-RDP86-00513R002201210012-0"

"APPROVED FOR RELEASE: 07/20/2001 CIA-RDP86-00513R002201210012-0

KAMNETSKIY B. L.

AA0046286

2

Soviet Inventions Illustrated, Section II Electrical, Derwent, UR 0482

1/70

241737 MECHANISM OF LEVEL GAUGE INDICATOR where the parameter to be measured is the loss of weight of the plunger (1) immersed in liquid, proportional to the depth of liquid. Increase of the force which ejects the cylinder causes a reduction of the angle of the torsion tube (2) which with rod (3) is balancing the weight of the plunger. Shaft (4) passing the seal (5) terminates with screw (6) with sliding nut (7) and ring (8). Arms (9) and (10) magnify the movement finally transferred by geared sector mechanism (11-16-17) to dial indicator (18-19-20), which is graduated in % of the level. Arm (9) is pressed by spring (12) to the projection on shaft (4) and by spring (14) to arm (10) touched by slider (15). End of shaft (4) is pressing on suitably machined axis (21) of the plunger.

Ym

21

19781436

APPROVED FOR RELEASE: 07/20/2001 CIA-RDP86-00513R002201210012-0"

"APPROVED FOR RELEASE: 07/20/2001 CIA-RDP86-00513R002201210012-0

AA0046286

The instrument is adjusted with no liquid in the tank. The slider (15), the insert (13) which controls the level of projection on the shaft (4), and link (16) are set in such a position that the indicator shows zero while the torsion tube of the plunger is not stressed.

17.3.67 as 1140020/26-10.S.YA.GOIKHMAN et al.(2.9.69) Bul 14/18.4.69. Class 42e. Int.Cl.G'01 f.

AUTHORS: Goykhman, S. Ya.; Sokolin, Sh. L.; Vikhman, M. Ye.; Il'inskiy, N. S.; Tuchnin, Ye. A.; Kamneetskiy, B. L.

2/2

19781437

APPROVED FOR RELEASE: 07/20/2001 CIA-RDP86-00513R002201210012-0"

"APPROVED FOR RELEASE: 07/20/2001 CIA-RDP86-00513R002201210012-0

AA0046285

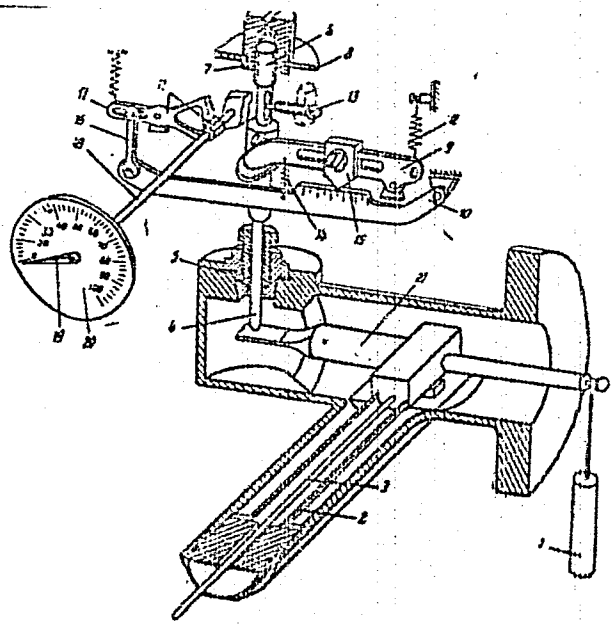

19781438

APPROVED FOR RELEASE: 07/20/2001 CIA-RDP86-00513R002201210012-0"

"APPROVED FOR RELEASE: 07/20/2001 CIA-RDP86-00513R002201210012-0

USSR

UDC 681.3.001.57

KAMNEV, B. P., NOVIKOV, O. A.

"A Device for Simulating Queueing Processes"

Moscow, Otkrytiya, izobreteniya, promyshlennyye obraztsy, tovarnyye znaki, No 23, Aug 71, Author's Certificate No 310263, Division G, filed 25 Mar 70, published 26 Jul 71, pp 154-155

Translation: This Author's Certificate introduces a device for simulating queueing processes. The device contains a random time interval generator, a simulator of the servicing apparatus, a module which simulates the queueing point, a logical distribution device, and a measurement device. As a distinguishing feature of the patent, in order to extend the range of problems which can be solved, the installation contains time limitation simulators, each of which is connected at its output to the corresponding queueing point simulator. The output of each queueing point simulator is connected to one input of the corresponding time limitation simulator, while the other input of each time limitation simulator is connected to the output of the logical distribution device.

1/1

APPROVED FOR RELEASE: 07/20/2001 CIA-RDP86-00513R002201210012-0"

"APPROVED FOR RELEASE: 07/20/2001 CIA-RDP86-00513R002201210012-0

1/2 028 UNCLASSIFIED PROCESSING DATE--23OCT70

TITLE--METHOD OF INVESTIGATING THE DEFORMED STATE OF ROTOR TYPE FORGINGS -U-

AUTHOR-(02)-KAMNEV, P.V., PANKRATOV, I.N.

COUNTRY OF INFO--USSR

SOURCE--LENINGRAD, ENERGOMASHINOSTROYENIYE, NO. 2, 1970, PP 30-32

DATE PUBLISHED--------70

SUBJECT AREAS--MECH., IND., CIVIL AND MARINE ENGR, ENERGY CONVERSION (NON-PROPULSIVE)

TOPIC TAGS--METAL EXTRUSION, BIBLIOGRAPHY, METAL DEFORMATION, METAL FORGING, TURBINE ROTOR

CONTROL MARKING--NO RESTRICTIONS

DOCUMENT CLASS--UNCLASSIFIED

PROXY REEL/FRAME--1997/1637 STEP NO--UR/0114/70/000/002/0030/0032

CIRC ACCESSION NO--AP0120391

UNCLASSIFIED

APPROVED FOR RELEASE: 07/20/2001 CIA-RDP86-00513R002201210012-0"

"APPROVED FOR RELEASE: 07/20/2001 CIA-RDP86-00513R002201210012-0

2/2 028 UNCLASSIFIED PROCESSING DATE--23OCT70

CIRC ACCESSION NO--AP0120391

ABSTRACT/EXTRACT--(U) GP-0- ABSTRACT. METHODS ARE EXAMINED FOR STUDYING THE IRREGULARITY OF THE DEFORMED STATE OF FORGINGS DURING EXTRUSION OPERATIONS; A METHOD OF PRODUCING SPECIMENS IS PRESENTED USING A THREE DIMENSIONAL COORDINATE GRID. RESULTS ARE PRESENTED FOR A STUDY OF THE PRECISION AND IDENTITY OF THE SPECIMENS PRODUCED WITH THE THREE DIMENSIONAL COORDINATE GRID AND THE ADMISSIBILITY OF STUDYING SPECIMENS WITH A THREE DIMENSIONAL COORDINATE GRID IS SHOWN WHEN SIMULATING THE PROCESS OF EXTRUSION.

UNCLASSIFIED

APPROVED FOR RELEASE: 07/20/2001 CIA-RDP86-00513R002201210012-0"

"APPROVED FOR RELEASE: 07/20/2001 CIA-RDP86-00513R002201210012-0

USSR UDC 621.391.17

KAMNEV, YE. F.

"Noise Immunity of Communication Systems with Multifrequency Signals in Multibeam Communication Channels"

Moscow, Radiotekhnika, Vol 25, No 1, Jan 70, pp 13-20

Abstract: Noise immunity of communication systems with multi-frequency signals is investigated and evaluated with respect to interferences of various kinds. Systems operating with multibeam channels with a definite number of beams were considered for the cases of total separation of beams and a two beam channel. Calculations show that the strongest decrease in noise immunity, due to incomplete separation of beams, is observed when both beams are of equal intensity, do not fade and are totally overlapping. The noise immunity of systems containing channels with dispersion (ionospheric or tropospheric) and also subjected to the simultaneous effect of fluctuating and concentrated interferences were analyzed. An analysis of the results shows that noise immunity of systems with multi-frequency signals in channels with dispersion depends on power distribution of signals incoming along the nonoverlapping sets of beams. Original article has nine formulas.

1/1

APPROVED FOR RELEASE: 07/20/2001 CIA-RDP86-00513R002201210012-0"

"APPROVED FOR RELEASE: 07/20/2001 CIA-RDP86-00513R002201210012-0

Acc. Nr.: AP0040490 Ref. Code: UR 0108

JPRS 52248

USSR UDC 621.391.17

KAMNEV, YE. F.

"Noise Immunity of Communication Systems with Multifrequency Signals in Multibeam Communication Channels"

Moscow, Radiotekhnika, Vol 25, No 1, Jan 70, pp 13-20

Abstract: Noise immunity of communication systems with multi-frequency signals is investigated and evaluated with respect to interferences of various kinds. Systems operating with multibeam channels with a definite number of beams were considered for the cases of total separation of beams and a two beam channel. Calculations show that the strongest decrease in noise immunity, due to incomplete separation of beams, is observed when both beams are of equal intensity, do not fade and are totally overlapping. The noise immunity of systems containing channels with dispersion (ionospheric or tropospheric) and also subjected to the simultaneous effect of

Reel/Frame
19741851

APPROVED FOR RELEASE: 07/20/2001 CIA-RDP86-00513R002201210012-0"

"APPROVED FOR RELEASE: 07/20/2001 CIA-RDP86-00513R002201210012-0

AP0040400

fluctuating and concentrated interferences were analyzed. An analysis of the results shows that noise immunity of systems with multi-frequency signals in channels with dispersion depends on power distribution of signals incoming along the nonoverlapping sets of beams. Original article has nine formulas.

19741852

APPROVED FOR RELEASE: 07/20/2001 CIA-RDP86-00513R002201210012-0"

"APPROVED FOR RELEASE: 07/20/2001 CIA-RDP86-00513R002201210012-0

KAMOTESOV, V.R.

Microelectronics

JPRS 57333

25 October 1972

MICROELECTRONICS

Excerpts from Russian-language book edited by F. V. Lukin; Mikroelektronika, No 5, 1972, Sovetskoye Radio Publishing House, Moscow, UDC 621.382:621.396.6-181.5.

CONTENTS PAGE

Annotation..... 1

Obituary of Fedor Viktorovich Lukin..... 2

Foreword..... 3

Abstracts..... 5

[I - USSR - F]

APPROVED FOR RELEASE: 07/20/2001 CIA-RDP86-00513R002201210012-0"

"APPROVED FOR RELEASE: 07/20/2001 CIA-RDP86-00513R002201210012-0

The article analyzes the coefficients of voltage transmission, the coefficient of suppression of the level (synchronous component), the working mode, and the initial voltage of disbalance of differential amplifying cascades, done completely on MDP transistors.

The expressions obtained may be used for computation and planning of such cascades both in the discrete and in the integrated variations.

The article contains 1 figure and 2 bibliographic references.

UDC 621.382.31

Equivalent Circuits of an Integrated Transistor for Practical Computations of the Frequency Characteristics of Semiconductor Integrated Circuits. Golubev, A.P. and Maivshev, I.V. In the Collection Mikroelektronika, edited by P.V. Lukin, No 5, p 201, Sovetskoye Radio Publishing House, 1972.

On the basis of the previously suggested undetermined matrix of the conductivities of an integrated transistor the authors show the limited applicability of the ordinary rectangular equivalent circuit. A method is given for determining the components of a complex rectangular equivalent circuit of an integrated transistor through the coefficients of its matrix of conductivities. The experimental and computed frequency characteristics are cited for amplifiers in which the transistors are connected according to the following circuits: common collector - common base and common emitter - common base.

The article contains 3 figures, 2 tables, and 4 bibliographic references.

UDC 621.382.8

Difference Control Element for Sequential Integrated TTL Structures. Aleksenko, A.G., Kanotsov, V.K., Rotnov, S.V., and Shagurin, I.I. In the Collection Mikroelektronika, edited by P.V. Lukin, No 5, p 211, Sovetskoye Radio Publishing House, 1972.

The article cites the structural circuits of typical sequential circuits (triggers, counters, registers), the control of which is accomplished on the basis of a difference element shaping the impulse by switching of the cyclic signal and satisfaction of certain logic conditions on functional inputs. A variation is suggested for a difference control element, made on the basis of a transistor-transistor

APPROVED FOR RELEASE: 07/20/2001 CIA-RDP86-00513R002201210012-0"

"APPROVED FOR RELEASE: 07/20/2001 CIA-RDP86-00513R002201210012-0

KAMOV N.I.

Acc. Nr.: AN0104123 Ref. Code: UR9003

TITLE-- ANNOUNCEMENT OF THE COMMITTEE ON LENIN AND STATE PRIZES, U.S.S.R.

NEWSPAPER-- IZVESTIYA, MAY 28, 1970, P 4, COLS 1-5

ABSTRACT-- NINETY ONE BASIC AND APPLIED RESEARCH WORKS HAVE BEEN NOMINATED FOR THE STATE PRIZES. TWO OF THESE, "THE MULTI-PURPOSE INDUSTRIAL HELICOPTER KA-26", BY N. I. KAMOV, V. B. AL,PEROVICH, V. B. BARSHEVSKIY, A. A. DMITRIYEV, G. I. IOFFE, M. A. KUPFER, L. A. POTASHNIK, N. N. PRIOROV, A. G. SATAROV, I. M. VEDENEYEV, S. B. BREN, AND V. A. NAZAROV, AND "THE DEVELOPMENT OF TURBOFAN JET ENGINES NK-8 AND NK-8-4, AND THE DEVELOPMENT AND REDUCTION TO SERIAL PRODUCTION A SYSTEM OF TECHNOLOGICAL PROCESSES WHICH ASSURED WIDE USES FOR TITANIUM ALLOYS", BY N. D. KUZNETSOV, M. T. VASILISHIN, V. A. KURGANOV, P. M. MARKIN, V. D. RADCHENKO, P. A. SUKHOV, A. A. MUKHIN, V. G. SHITOV, G. I. MUSHENKO, L. A. SHKODO, AND G. P. DOLGOLENKO, HAVE BEEN SUBMITTED BY THE MINISTRY OF THE AVIATION INDUSTRY.

1/2 Reel/Frame 19870555 4

APPROVED FOR RELEASE: 07/20/2001 CIA-RDP86-00513R002201210012-0"

"APPROVED FOR RELEASE: 07/20/2001 CIA-RDP86-00513R002201210012-0

Acc. Nr.: AN0104123

"A SERIES OF INVESTIGATIONS INTO THE DYNAMICS OF A BODY WITH FLUID-FILLED CAVITIES", /65-68/, BY N. N. MOISEYEV, A. A. PETROV, V. V. RUMYANTSEV AND F. L. CHERNOUS,KO AND "ULTRA HIGH PRECISION JIG BORING MILLS WITH 1,000 X 1,600 AND 1,400 X 2,240 MM PLATENS", BY A. I. KIR,YANOV, V. G. ABRAMOVICH, I. V. GUTKIN, A. S. ALIMPIYEV, G. B. PAUKOV, AND A. S. YEGUDKIN, HAVE BEEN SUBMITTED BY THE COMPUTATION CENTER OF THE ACADEMY OF SCIENCES AND THE MINISTRY OF THE MACHINE TOOL CONSTRUCTION AND TOOL INDUSTRY, RESPECTIVELY.

"THE RADICALLY IMPROVED MELTING TECHNOLOGY OF CRITICAL-PURPOSE HIGH-ALLOY STEELS AND ALLOYS OF IMPROVED QUALITY ACHIEVED BY THE INERT GAS TREATMENT OUTSIDE THE FURNACE", BY YU. V. GERASIMOV, O. M. CHEKHOMOV, N. V. SIDOROV, S. K. FILATOV, B. A. CHEREMNYKH, R. M. KHAYRUTDINOV, I. P. BARMOTIN, L. K. KOSYREV, K. P. BAKANOV, N. N. VLASOV, P. I. MELIKHOV, AND N. A. TULIN, HAS BEEN SUBMITTED BY THE ZLATOUST METALLURGICAL PLANT.

2/2

Reel/Frame
19870556

KZ

APPROVED FOR RELEASE: 07/20/2001 CIA-RDP86-00513R002201210012-0"

"APPROVED FOR RELEASE: 07/20/2001 CIA-RDP86-00513R002201210012-0

chemical transformations

(26)

La Verne
Return ACC
to Phyllis

SINGLE-ELECTRON TRANSFER AND CHEMICAL TRANSFORMATIONS

(Conference in Rostov-on-Don)

[Article by Candidate of Chemical Sciences Z. V. Todres; Moscow, Vestnik Akademii Nauk SSSR, Russian, No 9, September 1973, pp 102-106]

A conference on the role of electron transfers in chemical reactions was held in Rostov-on-Don on 22-25 May. It was organized by the Northern Caucasus Scientific Center of the Higher School; about 40 reports were presented. Participating in the conference were the leading chemical institutes of the AS USSR and the republican academies, and also Rostov-on-Don, Moscow, Leningrad and Gor'kiy universities.

Chemical reactions are usually regarded as the rupture and formation of bonds, that is, the rearrangement of the skeleton of a molecule. It is now considered, however, that the displacement of atoms or atomic arrangements is preceded by the transfer of electrons from one of the reacting molecules to the other. The study of that stage, which has become possible through the use of new instrumental methods of investigation, especially of electron paramagnetic and nuclear magnetic resonance, expands concepts of the reaction mechanism as a sequence of elementary stages known to us.

As a result of electron transfer new particles appear, not known to organic chemistry of the past. The properties of those products were examined in a number of reports. Hemoglobin, cytochrome C and other enzymes with Fe(III) after electron transfer give nonequilibrium forms in which the iron has alredy gone over into the state Fe(II) but the protein part still retains its previous configuration (R. M. Davydov). The transformation of 4-4'-dinitro-cis-stilbene into an anion-radical is accompanied by complete cis-trans-isomerization. Destruction of the symmetry of the molecule leads to establishment of equilibrium: 4-nitro-cis-stilbene in the presence of electron transfer gives a mixture

 JPRS 60661, 30 Nov. 73

KAMPEL, V. TS.

APPROVED FOR RELEASE: 07/20/2001 CIA-RDP86-00513R002201210012-0"

"APPROVED FOR RELEASE: 07/20/2001 CIA-RDP86-00513R002201210012-0

of anion-radicals of cis- and trans-stilbenes (Z. V. Todres). In the reports of S. P. Solodovnikov and N. I. Terekhova it was shown that the properties of the products of electron transfer depend not only on the distribution of electrons over the molecule but also on the entry of those products into the composition of the ionic associates.

Triethylgermyl derivatives of lithium or potassium, as Ye. N. Gladyshev has established, react in benzene or hexane with benzophenol, giving alcoholates of triethylgermyl-substituted benzhydrol. A completely different product forms in hexaethyldigermane, side by side with benzophenone ketyl. In other words, in hexametapol of the existing particle appears the triethylgermyl anion, which reacts further according to a scheme of single-electron transfer. Bimetallic organic compounds such as bis-(triethylgermyl)-mercury or bis-(triethylgermyl)-cadmium are capable of participating in electron transfer also in nonpolar solvents of the type of benzene, if a sufficiently strong acceptor, for example tetracyanoeen-ethylene, is used (Academician G. A. Razuvayev and G. A. Abakumov).

V. Ts. Kampel' and O. Yu. Okhlobystin revealed the general mechanism of the oxidation of organometallic compounds, according to which a single electron is torn away from those derivatives and they simultaneously decompose into an organic radical and the cation of the metal. The radicals, if they do not react chemically, give off still another electron, being oxidized to carbocations. The reaction ends with the stage of stabilization of those cations, for example, through their reaction with molecules of the solvent. The establishment of such a mechanism explains the formation of benzyl acetate as the main product of the oxidation of benzylmercuracetate by lead tetraacetate in acetic acid. Aliphatic mercury chlorides under the same conditions give ethers of acetic acid, paraffins and olefins. The formation of hydrocarbons in that reaction also indicates the existence of radicals as intermediates of the oxidation.

The ability of organomercuric compounds to act as electron donors was shown on the example of reactions of diaryl mercury with tetranitromethane (S. A. Shevelev, I. P. Beletskaya et al). Upon reacting with nitronium fluoroborate in sulfolan, diaryl mercury gives an aromatic hydrocarbon and (trinitromethyl)-aryl mercury as the main product and a certain quantity of Ar_2Hg (A. N. Kashin, I. P. Beletskaya, and V. I. Stanko). The obtained results agree with the hypothesis that in the first stage of the reaction the cation-radical of diaryl mercury and the radical NO_2 form. The latter forms through electron transfer either to the nitronium cation or to the tetranitromethane. The cation-radical of diaryl mercury decomposes, giving the highly reactive radical Ar'. That radical reacts insignificantly with the lowly reactive

APPROVED FOR RELEASE: 07/20/2001 CIA-RDP86-00513R002201210012-0"

"APPROVED FOR RELEASE: 07/20/2001 CIA-RDP86-00513R002201210012-0

1/2 021 UNCLASSIFIED PROCESSING DATE--04DEC70

TITLE--CALORIMETRIC FLOW METER USED IN ALUMINA PRODUCTION -U-

AUTHOR-(03)-DVORKIN, A.S., KAMRAZE, A.N., FITERMAN, M.YA.

COUNTRY OF INFO--USSR

SOURCE--TSVET. METAL. 1970, 43(5), 56-8

DATE PUBLISHED--------70

SUBJECT AREAS--MATERIALS, METHODS AND EQUIPMENT

TOPIC TAGS--ALUMINA, INDUSTRIAL PRODUCTION, CALORIMETER, FLOW METER

CONTROL MARKING--NO RESTRICTIONS

DOCUMENT CLASS--UNCLASSIFIED

PROXY REEL/FRAME--3008/0329 STEP NO--UR/0136/70/043/005/0056/0058

CIRC ACCESSION NO--AP0137436

UNCLASSIFIED

APPROVED FOR RELEASE: 07/20/2001 CIA-RDP86-00513R002201210012-0"

"APPROVED FOR RELEASE: 07/20/2001 CIA-RDP86-00513R002201210012-0

2/2 021 UNCLASSIFIED PROCESSING DATE--04DEC70

CIRC ACCESSION NO--AP0137434

ABSTRACT/EXTRACT--(U) GP-0- ABSTRACT. THE PRINCIPLE OF THE TITLE FLOW METER IS THE HEAT EXCHANGE BETWEEN THE MEASURED STREAM AND AN AUXILIARY STREAM OF A HEAT EXCHANGE MEDIUM (E.G. WATER) WHICH FLOWS AT A CONST. RATE THROUGH A JACKET SURROUNDING THE TUBE WITH THE MEASURED STREAM. SEMICONDUCTOR THERMISTORS ARE USED FOR TEMP. MONITORING. A REGULAR HEAT BALANCE OF THE AUXILIARY STREAM IS CARRIED OUT, AS THE RESULT OF WHICH THE HEAT TAKEN UP BY THE AUXILIARY STREAM FROM THE MEASURED STREAM IS DETD., AND FROM THIS THE MASS OF THE MEASURED STREAM IS CALCD. THE RANGE OF TRIED TEMPS. OF THE MEASURED STREAM (SOLN. OF NA ALUMINATE) WAS 50-100DEGREES, WHILE THAT OF THE AUXILIARY STREAM (WATER) WAS 5-30DEGREES. THE FLOW RATES OF THE MEASURED STREAM WERE 400-4000 KG-HR. THE ERROR OF MEASUREMENT WAS PLUS OR MINUS 1.5PERCENT, WHILE THE DURATION OF THE TRANSITION PERIOD, WHEN THE FLOW RATE WAS BEING CHANGED RAPIDLY BY 50PERCENT, WAS 20 SEC.

UNCLASSIFIED

APPROVED FOR RELEASE: 07/20/2001 CIA-RDP86-00513R002201210012-0"

"APPROVED FOR RELEASE: 07/20/2001 CIA-RDP86-00513R002201210012-0

1/2 015 UNCLASSIFIED PROCESSING DATE--13NOV70

TITLE--MODEL OF A COMPLEX ELECTRIC SYSTEM FOR STUDYING TRANSIENT ELECTROMAGNETIC PROCESSES -U-

AUTHOR-(02)-KAMSHA, M.M., KLIMKOV, A.K.

COUNTRY OF INFO--USSR

SOURCE--ELEKTRICHESTVO (ELECTRICITY), 1970, NO 1, PP 21-26

DATE PUBLISHED--------70

SUBJECT AREAS--ELECTRONICS AND ELECTRICAL ENGR.

TOPIC TAGS--ELECTROMAGNETIC PROPERTY, TEST MODEL, TRANSIENT ELECTROMAGNETIC FIELD, ELECTRIC IMPEDANCE

CONTROL MARKING--NO RESTRICTIONS

DOCUMENT CLASS--UNCLASSIFIED

PROXY REEL/FRAME--3004/0256 STEP NO--UR/0105/70/000/001/0021/0026

CIRC ACCESSION NO--AP0130990

UNCLASSIFIED

APPROVED FOR RELEASE: 07/20/2001 CIA-RDP86-00513R002201210012-0"

"APPROVED FOR RELEASE: 07/20/2001 CIA-RDP86-00513R002201210012-0

2/2 015 UNCLASSIFIED PROCESSING DATE--13NOV70

CIRC ACCESSION NO--AP0130990

ABSTRACT/EXTRACT--(U) GP-0- ABSTRACT. STATIC SCHEMES FOR MODELING SYNCHRONOUS AND ASYNCHRONOUS MACHINES IN TRANSIENT PROCESSES ARE EXAMINED. THE SCHEMES ARE CONSTRUCTED IN THE D,Q,O AXES WITH ACCOUNT FOR THE TRANSFORMER EMF AND THE ACTIVE IMPEDANCES OF THE STATOR CIRCUITS. ON THE BASIS OF THE SCHEMES FOR MODELING AND ELECTRICAL MACHINES AND OTHER ELEMENTS OF THE ELECTRICAL SYSTEM, A COMPUTER IS USED TO CONSTRUCT A MODEL OF A COMPLEX ELECTRICAL SYSTEM WHICH IS INTENDED FOR STUDYING THE TRANSIENT ELECTROMAGNETIC PROCESSES FOR THE CASE OF SHORT CIRCUITS IN THE SYSTEM. FACILITY: ALL UNION SCIENTIFIC RESEARCH INSTITUTE OF ELECTROMECHANICS, ISTRA BRANCH. FACILITY: ALL UNION SCIENTIFIC RESEARCH INSTITUTE, ISTRA BRANCH.

UNCLASSIFIED

APPROVED FOR RELEASE: 07/20/2001 CIA-RDP86-00513R002201210012-0"

"APPROVED FOR RELEASE: 07/20/2001 CIA-RDP86-00513R002201210012-0

USSR UDC 8.74

KAMSHA, V. P., PEREVOZCHIKOVA, O. L.

"ALGAMS-ASVT Debugging System"

V sb. Teoriya yazykov i metody postroyeniya sistem programmir. (Language Theory and Methods of Constructing Programming Systems--collection of works), Kiev-Alushta, 1972, pp 315-324 (from RZh-Kibernetika, No 12, Dec 72, Abstract No 12V485)

Translation: A study was made of a system for debugging the ALGAMS complex which is a component part of the general programming automation system ASVT. The problem of the debugging system consists in detecting and eliminating the syntactic and sematic errors. It is solved by the translator in two steps. In the first step the syntactic errors and the semantic errors accessible to detection during the translation time are caught. The second debugging step is carried out by a special program by any debugger for discovering the semantic errors which cannot be detected during the translation. The ALGAMS debugging program bypasses the error operators with output of messages and execution of the correction operators if this is not forbidden by the user using a special parameter. In the debugging language there are 12 operators which offer the following possibilities: a) printout of the values of the prime variables, files, and their elements at the given point; b) tracing the variation of the

1/2

APPROVED FOR RELEASE: 07/20/2001 CIA-RDP86-00513R002201210012-0"

"APPROVED FOR RELEASE: 07/20/2001 CIA-RDP86-00513R002201210012-0

USSR

KAMSHA, V. P., et al., Teoriya yazykov i metody postroyeniya sistem programmir., Kiev-Alushta, 1972, pp 315-324

values of an arbitrary set of variables on passage of given sections of the program; c) variation of the values of the variables at any point of the program; d) tracing the order of passage of the tags and boundaries of the blocks of a given part of the program; e) calculation of the number of times passing through any point; f) changing the programmed sequence for execution of the operators of the initial program; g) inclusion, exclusion and restoration of following the program on passing given points; h) in addition, in all the enumerated cases it is possible to indicate the numbers of the passes and the conditions on satisfaction of which it is necessary to carry out the debugging operations. The described properties of the debugging language permit checking of several blocks of the program and detection of several errors in one output to the machine. For this purpose before the beginning of each module it is sufficient to simulate the operation of the preceding modules by the debugging operators. If as a result of tracing any part of the program an error cannot be detected in view of the fact that little information is output, it is necessary to introduce additional tags and do a repeated translation of the entire program. The bibliography has 15 entries.

2/2

APPROVED FOR RELEASE: 07/20/2001 CIA-RDP86-00513R002201210012-0"

"APPROVED FOR RELEASE: 07/20/2001 CIA-RDP86-00513R002201210012-0

USSR

UDC 8.74

KANSHA, V. P.

"Input Language of the SMO ASVT Editor Program"

Tr. NII upravl. vychisl. mashin (Works of the Scientific Research Institute of Control Computers), 1971, vyp. 4, pp 15-26 (from RZh-Kibernetika, No 7, Jul 72, Abstract No 7V593)

Translation: The input language for the SMO ASVT Redaktor [Editor] program is described. The program provides for insertion, deletion, and replacement of both entries and parts of text in an edited file, checking the order of the numbers of the entry numbering fields, introduction of new numbering and obtaining a printout.

1/1

APPROVED FOR RELEASE: 07/20/2001 CIA-RDP86-00513R002201210012-0"

"APPROVED FOR RELEASE: 07/20/2001 CIA-RDP86-00513R002201210012-0

USSR UDC: 537.312.62

BARANOV, I. A., KONOVALOV, N. T., KUNAKOV, Ya. N., KAMSKIY, L. Z.

"Development of Nb_3Sn Superconducting Material for Solenoids"

V sb. Probl. sverkhprovodyashch. materialov (Problems of Superconducting Materials—collection of works), Moscow, "Nauka", 1970, pp 120-123 (from RZh-Radiotekhnika, No 5, May 71, Abstract No 5D547)

Translation: It is known that three intermediate compounds — Nb_3Sn, Nb_6Sn_5 and $NbSn_2$ — are formed in Nb-Sn diffusion layers, and the regions and temperatures of phase existence have also been determined. These data were used in developing the technology of Nb_3Sn superconducting wire. Nb_3Sn superconductor was developed and produced in the form of microcable with copper coating and heat-resistant enamel. The tinning technique is worked out; the amount of tin deposited on the cable may be regulated up to 30 percent by weight. The critical temperature and critical current are measured in multiplier cable heat-treated at 960±10°C. One illustration, one table, bibliography of ten titles.

1/1

APPROVED FOR RELEASE: 07/20/2001 CIA-RDP86-00513R002201210012-0"

"APPROVED FOR RELEASE: 07/20/2001 CIA-RDP86-00513R002201210012-0

USSR

UDC 669.293.6.018.5.537.312.62

BARANOV, I. A., KONOVALOV, N. T., KUNAKOV, Ya. N., KAMSKIY, L. Z.

"Development of Superconducting Material of Nb_3Sn for Solenoids"

Probl. Sverkhprovodyashch. Materialov [Problems of Superconducting Materials -- Collection of Works], Moscow, Nauka Press, 1970, pp. 120-123. (Translated from Referativnyy Zhurnal Metallurgiya, No. 5, 1971, Abstract No. 5 I778 by the authors).

Translation: A superconductor of Nb_3Sn is developed and manufactured in the form of microcable with Cu coating and heat-resistant enamel. A technology of tinning is developed; the quantity of Sn precipitated on the cable can be adjusted up to 30%. Measurements of the critical temperature and critical current in specimens of multiple-core cable heat-treated at 960±10°C are performed. 1 fig; 1 table; 10 biblio refs.

1/1

APPROVED FOR RELEASE: 07/20/2001 CIA-RDP86-00513R002201210012-0"

"APPROVED FOR RELEASE: 07/20/2001 CIA-RDP86-00513R002201210012-0

USSR

UDC 539.29:669.293:669.6

BARANOV, I. A., KONOVALOV, N. T., KUNAKOV, Ya. N., and KAMSKIY, L. Z.

"Development of Superconducting Material of Nb_3Sn for Solenoids"

Problemy Sverkhprovodyashchikh Materialov [Problems of Superconducting Materials -- Collection of Works], Moscow, Nauka Press, 1970, pp 120-123

Translation: It is known that three intermediate compounds, Nb-Sn, Nb_6Sn_5, and $NbSn_2$, are formed in diffusion layers of Nb-Sn; the areas and temperatures of existence of the phases have also been established. These data were used to develop the technology for a superconducting wire of Nb_3Sn.

A superconductor of Nb_3Sn has been developed and manufactured in the form of a microcable with a copper coating and heat resistant enamel.

A tinning technology is developed; the quantity of tin deposited on the cable can be regulated up to 30 wt.%. Measurements are performed of the critical temperature and critical current in specimens of multiple core cable heat treated at 960 ± 10°C.

1 figure; 1 table; 10 biblio. refs.

1/1

APPROVED FOR RELEASE: 07/20/2001 CIA-RDP86-00513R002201210012-0"

"APPROVED FOR RELEASE: 07/20/2001 CIA-RDP86-00513R002201210012-0

KAMSYUK, L. G.

UDC: 614.23:616-053.2

INVESTIGATION OF SCOPE AND NATURE OF PEDIATRICIANS' WORK IN CHILDREN'S SOMATIC DEPARTMENTS OF MUNICIPAL HOSPITALS

[Article by L.G. Kamsyuk, Department of Scientific Organization of Labor (headed by Professor V.S. Luk'yanov), All-Union Scientific Research Institute of Social Hygiene and Public Health Organization imeni N.A. Semashko, Moscow, Moscow]
[Sovetskoye Zdravookhraneniye, Russian, No 9, 1972, submitted 29 February 1972, pp 29-34]

Most somatic departments for children in municipal hospitals are differentiated according to the age of the hospitalized children. There are three types of departments to take care of children in cities: for infants, older children, and so-called mixed departments where children ranging in age from 0 to 15 years are hospitalized.

In accordance with Order No 282-m dated 26 December 1955, of the USSR Minister of Health, a standard work load norm has been established for doctors in charge of such departments: 15-20 beds per physician's post. This norm does not take into consideration the distinctions with regard to organizing work and work schedule in different types of somatic departments. Yet the age of the children treated is a significant factor affecting the scope and nature of a doctor's work. In the first place, this is related to the differences in morbidity levels and hospitalization of children at different ages (R.B. Kogan, N.I. Dovat, S.Yu. Lavina, M.A. Bogomol'skiy, I.P. Mokerov, and others). Secondly, the work load is not the same for physicians working with children of different ages. According to the data of M.P. Roytman and A.A. Arapova, in departments for infants it is smaller than in departments for older children.

The work schedule of pediatricians in somatic departments of the hospitals has been investigated by a number of authors (M.A. Bogovoy, S.M. Matuko, N.A. Gorbunova). Nevertheless, there are no data dealing in a differentiated manner with the scope and nature of pediatricians' work as related to type of somatic department. Nor are there enough works dealing with the composition of patients hospitalized in pediatric somatic departments.

JPRS 57351
27 Oct 72

APPROVED FOR RELEASE: 07/20/2001 CIA-RDP86-00513R002201210012-0"

"APPROVED FOR RELEASE: 07/20/2001 CIA-RDP86-00513R002201210012-0

1/2 016 UNCLASSIFIED PROCESSING DATE--18SEP70

TITLE--DIAGRAM OF THE CURRENT DENSITY DISTRIBUTION DURING MACHINING STRIPS BY ELECTROEROSION -U-

AUTHOR-(02)-KALININ, M.A., KAMSYUK, M.S.

COUNTRY OF INFO--USSR

SOURCE--MASHINOSTROENIE, NO. 2, 1970, PP 136-139

DATE PUBLISHED-------70

SUBJECT AREAS--MECH., IND., CIVIL AND MARINE ENGR

TOPIC TAGS--ELECTROEROSION MACHINING, CURRENT DENSITY

CONTROL MARKING--NO RESTRICTIONS

DOCUMENT CLASS--UNCLASSIFIED

PROXY REEL/FRAME--1985/0315 STEP NO--UR/0418/70/000/002/0136/0139

CIRC ACCESSION NO--AP0100802

UNCLASSIFIED

APPROVED FOR RELEASE: 07/20/2001 CIA-RDP86-00513R002201210012-0"

"APPROVED FOR RELEASE: 07/20/2001 CIA-RDP86-00513R002201210012-0

2/2 016 UNCLASSIFIED PROCESSING DATE--18SEP70

CIRC ACCESSION NO--AP0100802

ABSTRACT/EXTRACT--(U) GP-0- ABSTRACT. OUTLINE OF THE NOTION OF THE CURRENT DENSITY DISTRIBUTION PATTERN DURING ELECTROEROSIVE MACHINING AND PRINCIPLES FOR CONSTRUCTING DIAGRAMS OF THIS DISTRIBUTION. THESE DIAGRAMS ARE CONSTRUCTED ON THE BASIS OF AN EXPRESSION DERIVED BY KALININ AND KAMSIUK (1970). AS EXAMPLES, DIAGRANS OF THE CURRENT DENSITY DISTRIBUTION FOR A SECTION AND FOR A WHOLE PROFILE OF THE TOOL ARE PRESENTED.

UNCLASSIFIED

APPROVED FOR RELEASE: 07/20/2001 CIA-RDP86-00513R002201210012-0"

"APPROVED FOR RELEASE: 07/20/2001 CIA-RDP86-00513R002201210012-0

1/2 047 UNCLASSIFIED PROCESSING DATE [illegible]70

TITLE--CHANGE IN THE DISPERSION AND EXCITON ABSORPTION OF A CADMIUM SULFIDE CRYSTAL UNDER THE INFLUENCE OF INTENSE RUBY LASER RADIATION -U-

AUTHOR-(02)-BRODIN, M.S., KAMUZ, A.M.

COUNTRY OF INFO--USSR

SOURCE--FIZ. TVERD. TELA 1970, 12(4), 1251-3

DATE PUBLISHED--------70

SUBJECT AREAS--PHYSICS

TOPIC TAGS--CADMIUM SULFIDE, RUBY LASER, LASER RADIATION, LIGHT DISPERSION, EXCITON ABSORPTION, OPTIC PROPERTY, ABSORPTION SPECTRUM, CRYSTAL PROPERTY

CONTROL MARKING--NO RESTRICTIONS

DOCUMENT CLASS--UNCLASSIFIED

PROXY REEL/FRAME--2000/1301 STEP NO--UR/0181/70/012/004/1251/1253

CIRC ACCESSION NO--AP0124952

UNCLASSIFIED

APPROVED FOR RELEASE: 07/20/2001 CIA-RDP86-00513R002201210012-0"

"APPROVED FOR RELEASE: 07/20/2001 CIA-RDP86-00513R002201210012-0

2/2 047 UNCLASSIFIED PROCESSING DATE--20NOV70

CIRC ACCESSION NO--AP0124952

ABSTRACT/EXTRACT--(U) GP-0- ABSTRACT. VARIATION OF OPTICAL PROPERTIES WAS STUDIED OF CDS CRYSTAL UNDER THE ACTION OF POWERFUL RUBY LASER RADIATION (1.78 EV). SPECTRA WERE OBTAINED OF EXCITON ABOSRPTION AND MEASUREMENTS WERE CARRIED OUT OF THE SPECTRAL DEPENDENCE OF THE MAGNITUDE OF BIREFRINGENCE OF CDS DURING THE ACTION OF LASER RADIATION AND IN ITS ABSENCE. THE LINES OF FREE EXCITONS ARE SHIFTED TOWARD THE LONG WAVELENGTH SIDE BY APPROX. 60 CM NEGATIVE PRIME1. TIME DEPENDENCE OF THE CRYSTAL TRANSPARENCY WAS MEASURED ON THE FREQUENCY OF 20,360 CM NEGATIVE PRIME1. LASER PULSE DARKENING OF THE CRYSTAL DISAPPEARS WHEN THE PULSE CEASES. IT FOLLOWS THAT UNDER THE ACTION OF A POWERFUL LASER RADIATION, NOTICEABLE CHANGES CAN TAKE PLACE IN THE DISPERSION OF CDS CRYSTALS DUE TO VARIATIONS IN THE ABSORPTION SPECTRUM. THE LATTER ARE MAINLY DUE TO THE FIELD ACTION OF THE RADIATION. FACILITY: INST. FIZ., KIEV, USSR.

UNCLASSIFIED

APPROVED FOR RELEASE: 07/20/2001 CIA-RDP86-00513R002201210012-0"

"APPROVED FOR RELEASE: 07/20/2001 CIA-RDP86-00513R002201210012-0

USSR

UDC: 621.317.335

KAMUZ, V. K., LUBYANYY, V. Z.

"A Method of Determining the Figure of Merit of a Varicap"

Moscow, Otkrytiya, Izobreteniya, Promyshlennyye Obraztsy, Tovarnyye Znaki, No 28, 1970, Soviet Patent No 280647, Class 21, filed 26 Nov 68, p 67

Abstract: This Author's Certificate introduces a method of determining the figure of merit of varicaps by connecting them in a self-oscillating tank which operates under mild self-excitation conditions. As a distinguishing feature of the patent, measurement precision is improved by changing one of the parameters of the self oscillator, such as steepness, to maintain a constant voltage across the varicap, and determining the figure of merit from the change in this parameter.

1/1

APPROVED FOR RELEASE: 07/20/2001 CIA-RDP86-00513R002201210012-0"

"APPROVED FOR RELEASE: 07/20/2001 CIA-RDP86-00513R002201210012-0

USSR

ZADYKHAYLO, I. B., KAMYNIN, S. S., LYUBIMSKIY, E. Z.

"Problems of Design of Computers Using High-Quality Units"

Sistemnoye i teor. programmirovaniye [Systems and Programming Theory -- Collection of Works], Novosibirsk, 1972, pp 126-235 (Translated from Referativnyy Zhurnal - Kibernetika, No 8 V589 by the authors)

Translation: This work is dedicated to a discussion of the problems of selection of boundaries between the hardware and software of a computer system. Principles are suggested for creation of a machine language which should allow broad development of apparatus and have greater stability, since it is selected on the basis of rather general considerations.

1/1

APPROVED FOR RELEASE: 07/20/2001 CIA-RDP86-00513R002201210012-0"

"APPROVED FOR RELEASE: 07/20/2001 CIA-RDP86-00513R002201210012-0

USSR UDC 681.325.65

KAMYNIN, Yu. N., and KOT, V. I.

"A Logical Automaton"

USSR Author's Certificate No 276516, Filed 12/05/69, Published 22/10/70. (Translated from Referativnyy Zhurnal Avtomatika, Telemekhanika i Vychislitel'naya Tekhnika, No 5, 1971, Abstract No 5B171P).

Translation: There are well-known logic devices with a standardized system of connections between elements, such devices containing a diode matrix with transformer coupling and realizing the logic functions AND, OR, and NOT, and the time functions "delay" and "memory." The device suggested differs in that each of the outputs of the variable input unit, memory unit, and delay unit is connected directly and through a NOT element to tubes of the program carrier, the outputs of which are connected through an OR element to one of the inputs of the AND element. The output of the AND element is connected through the tubes of the program carrier to the inputs of the memory unit, delay unit, and output unit. This allows the functional capabilities to be expanded and the circuit of the device to be simplified.

1/1

APPROVED FOR RELEASE: 07/20/2001 CIA-RDP86-00513R002201210012-0"

"APPROVED FOR RELEASE: 07/20/2001 CIA-RDP86-00513R002201210012-0

Acc. Nr. AP0055216 Abstracting Service: CHEMICAL ABST. 6-70 Ref. Code UR9085

113061a Effect of the impurity content of hydrogenated fat on its filtration rate. Kamyshan, M. A.; Derevyanko, E. A. (Krasnodar. Politekh. Inst., Krasnodar, USSR). *Masla-Zhir. Prom.* 1970, 36(1), 17-18 (Russ). The rate of filtration of hydrogenated fat is substantially influenced by substances contained in raw fat and byproducts formed during refining and hydrogenation. Therefore, the complete removal of phospholipids, waxes, soaps, and other constituents is necessary. The presence of 0.5-1.0% phospholipids decreases rate of filtration 70-80%; 0.025% xanthophyll decreases the rate 80-7%; 0.5% cholesterol ~50%, 0.1% waxes 50%, and 0.3% waxes 80%. The presence of soaps decreases the filtration rate as follows 0.0035% Na soap ~23%, 0.004% Mg soap ~40%, 0.004% Fe soap ~55%; and 0.01% Ni soap ~70%. Because the main part of impurities is collected on the catalyst (by reuse many times) it may be the main reason for difficulties in filtration of hydrogenated fats. Therefore, the reuse of the catalyst should be stopped before difficulties occur. M. Zajcew

Y1 11 CB

REEL/FRAME
19840432

APPROVED FOR RELEASE: 07/20/2001 CIA-RDP86-00513R002201210012-0"

"APPROVED FOR RELEASE: 07/20/2001 CIA-RDP86-00513R002201210012-0

USSR

UDC: 621.372.413:535

YEPISHIN, V. A., KAMYSHAN, V. V., and VALITOV, R. A.

"Modeling Diffraction-Coupled Open Cavities in the Millimeter Wavelength Range"

Radiotekhnika. Resp. Mezhved. nauchno-tekhn. sb. (Electronic Engineering, Republic Interdepartmental Scientific-Technical Collection) 1970, No. 14, pp 69-72 (from RZh-Radiotekhnika, No. 3, March 71, Abstract No. 3D264)

Translation: Description is given of an experimental model of coupled resonators consisting of cylindrical mirrors for band frequency attenuation that are fastened perpendicular to the generating mirros. Results are reported of the determination of the diffraction losses for two or three coupled resonators. Three illustrations, bibliography of three. Author's abstract.

1/1

APPROVED FOR RELEASE: 07/20/2001 CIA-RDP86-00513R002201210012-0"

"APPROVED FOR RELEASE: 07/20/2001 CIA-RDP86-00513R002201210012-0

USSR UDC 541.13

KUDRYASHOV, I. V., KAMYSHCHENKO, S. D., and MAKARYAN, E. M., Moscow Chemical-Technological Institute Imeni D. I. Mendeleyev

"Study of the Kinetics of Cathodic Evolution of Hydrogen Over Tungsten Monocrystals With Indexes (100), (110), (111)"

Moscow, Elektrokhimiya, Vol 9, No 4, Apr 73, pp 478-480

Abstract: The kinetics and mechanism of hydrogen evolution from a cathode depend on the surface properties of the electrode metal. An attempt was made to find out the effect of the orientation of tungsten monocrystal and of the state of crystal surface on the overcharge of hydrogen evolution. The monocrystals and polycrystals were polished either mechanically or electrochemically. Mechanically polished crystals showed no difference in kinetic parameters; the specificity of their surface being probably destroyed by mechanical polishing. On the electropolished electrodes the overcharge was about 0.2 V higher than on the mechanically treated ones. Electropolished material showed differences in the kinetic parameters a and b in the following order: (110) > (100) > (polycrystal) > (111).

1/1

APPROVED FOR RELEASE: 07/20/2001 CIA-RDP86-00513R002201210012-0"

"APPROVED FOR RELEASE: 07/20/2001 CIA-RDP86-00513R002201210012-0

USSR

UDC 669.11-154:094.1.23:295

VARNAVSKIY, I. N., GUREVICH, Yu. G., and KAMYSHEV, G. N., Orenburg Polytechnic Institute, Orsk-Khalilov Metallurgical Combine

"Formation of Nonmetallic Inclusions In the Deoxidation of Iron With Titanium"

Moscow, Izvestiya Uchebnykh Vysshikh Zavedeniy--Chernaya Metallurgiya, No 6, Jun 73, pp 53-56

Abstract: An iron rod 5.0-6.0 mm in diameter and 65 mm long was placed in a magnesite crucible and heated in a resistance furnace to 1570°C where titanium was added to the metal surface through a quartz tube. Melting was sustained from 5 to 15 min. after which the crucible was removed from the furnace and quenched in water. Titanium was added so that its distribution along the rod length was 0 to 0.3-1.5%. Oxygen and nitrogen content in the initial samples was equal, which made it possible to study the composition and nature of inclusions for the different concentrations of titanium, oxygen, and nitrogen in the iron. It was found that the primary products from reduction of iron with titanium are molten oxides of the type $nFeO.mTiO_2$. According to the degree of increasing the ratio of Ti/O_2, solid Ti_2O_3 and TiO are crystallized from the melt, and with high concentrations of nitrogen--TiN (solid). Since solid crystals of inclusions of oxides and titanium nitride separate out on molten

1/2

APPROVED FOR RELEASE: 07/20/2001 CIA-RDP86-00513R002201210012-0"