"APPROVED FOR RELEASE: 08/09/2001 CIA-RDP86-00513R002201310003-9

2/2 008 UNCLASSIFIED PROCESSING DATE--13NOV70

CIRC ACCESSION NO--AP0128643

ABSTRACT/EXTRACT--(U) GP-0- ABSTRACT. THE PRIME125 I AND PRIME211 AT FORMED AS A RESULT OF K CAPTURE IN PRIME125 XE AND PRIME211 RN, RESP., IN CONTACT WITH DEGASSED C SUB6 H SUB6 AT ROOM TEMP. AND IN THE LIGHT, REACT WITH THE C SUB6 H SUB6; THE ONLY REACTION PRODUCTS ARE PHI AND ASTATOBENZENE, RESP., BUT IS SIMILAR TO 30PERCENT OF THE AT REMAINS IN THE AT PRIME(0) FORM AND CANNOT BE EXTD. FROM THE C SUB6 H SUB6 BY N H SUB2 SO SUB4 OR N H SUB2 SO SUB4 SATD. WITH SO SUB2.

UNCLASSIFIED

APPROVED FOR RELEASE: 08/09/2001 CIA-RDP86-00513R002201310003-9"

"APPROVED FOR RELEASE: 08/09/2001 CIA-RDP86-00513R002201310003-9

USSR UDC: 620.191.33

KHALMANOV, Kh., CHEREPANOV, G. P., Moscow

"Concerning Growth of Fatigue Cracks With a Low Stress Level"

Novosibirsk, Zhurnal Prikladnoy Mekhaniki i Tekhnicheskoy Fiziki, No 3, May/Jun 73, pp 157-160

Abstract: Recent experiments have shown that in high-strength nickel steels the growth of fatigue cracks in the low-stress region differs considerably from that predicted by theory. In this connection it has been suggested that atmospheric moisture might influence the growth of fatigue cracks in these materials. In this paper the moisture effect is taken into account within the framework of the old theory giving a completely satisfactory explanation and description of experimental data.

1/1

APPROVED FOR RELEASE: 08/09/2001 CIA-RDP86-00513R002201310003-9"

"APPROVED FOR RELEASE: 08/09/2001 CIA-RDP86-00513R002201310003-9

Analysis and Testing

USSR

KHAIMANOV, KH., and CHEREPANOV, G. P., Moscow

"Analysis of Experimental Data on Fatigue Crack Propagation"

Moscow, Zhurnal Prikladnoy Mekhaniki i Tekhnicheskoy Fiziki, No 5, Sep-Oct 70, pp 129-132

Abstract: Fracture toughness controls the size of the defect which leads to failure under a given stress and is thus an important characteristic of a material. Under alternating loads, however, fatigue crack propagation rate rather than fracture toughness may become the limiting factor in strength calculations. This paper correlates the theory of fatigue crack propagation behavior (advanced by D. R. Donaldson and W. E. Anderson) with available experimental data. It offers a phenomenological description of the process of fatigue crack propagation as well as a relationship for this propagation rate where β and K_c are constants

$$\frac{dl}{dn} = -\beta\left(\frac{N_{max}^2 - N_{min}^2}{K_c^2} + \ln\frac{K_c^2 - N_{max}^2}{K_c^2 - N_{min}^2}\right)$$

1/2

APPROVED FOR RELEASE: 08/09/2001 CIA-RDP86-00513R002201310003-9"

"APPROVED FOR RELEASE: 08/09/2001 CIA-RDP86-00513R002201310003-9

USSR

KHALMANOV, KH., and CHEREPANOV, G. P., Zhurnal Prikladnoy Mekhaniki i Tekhnicheskoy Fiziki, No 5, Sep-Oct 70, pp 129-132

of the material, n is the number of loading cycles, l is the parameter of crack length, and N_{max} and N_{min} are the maximum and minimum magnitudes for the stress intensity factors within a cycle during instant n. Multi-cycle and low-cycle fatigue cracks are discussed and relationships for various crack propagation rates and stress intensity factors are reviewed. Analysis of experimental data on fatigue crack propagation confirms within experimental error the proposed theoretical relationship for a wide range of cycle numbers before failure.

2/2

APPROVED FOR RELEASE: 08/09/2001 CIA-RDP86-00513R002201310003-9"

"APPROVED FOR RELEASE: 08/09/2001 CIA-RDP86-00513R002201310003-9

1/2 024 UNCLASSIFIED PROCESSING DATE--02OCT70

TITLE--PROBLEMS OF BIOCHEMISTRY OF SURPLUS SYNTHESIS OF PYRIDINE ADENINE DINUCLEOTIDES -U-

AUTHOR-(03)-CHAGOVETS, R.V., KHALMURADOV, A.G., SHUSHEVICH, S.I.

COUNTRY OF INFO--USSR

SOURCE--UKRAYNS'KIY BIOKINICHNIY ZHURNAL, 1970, VOL 42, NR 2, PP 191-200

DATE PUBLISHED--------70

SUBJECT AREAS--BIOLOGICAL AND MEDICAL SCIENCES

TOPIC TAGS--NUCLEOTIDE, LIVER, PYRIDINE, DEHYDROGENASE, ENZYME ACTIVITY, PHOSPHORUS, METABOLISM

CONTROL MARKING--NO RESTRICTIONS

DOCUMENT CLASS--UNCLASSIFIED

PROXY REEL/FRAME--1988/1678 STEP NO--UR/0300/70/042/002/0191/020

CIRC ACCESSION NO--AP0106424

UNCLASSIFIED

APPROVED FOR RELEASE: 08/09/2001 CIA-RDP86-00513R002201310003-9"

"APPROVED FOR RELEASE: 08/09/2001 CIA-RDP86-00513R002201310003-9

2/2 024 UNCLASSIFIED PROCESSING DATE--02OCT70

CIRC ACCESSION NO--AP0106424

ABSTRACT/EXTRACT--(U) GP-0- ABSTRACT. DYNAMICS OF MULTIPLY RISE OF CONTENT IN LIVER TISSUE OF PYRIDINE ADENINE DINUCLEOTIDES (PAD) AFTER ADMINISTRATION OF NICOTINIC ACID (NA), NICOTINAMIDE (NAM) AND 3 METHYLPYRIDINE,BETA,PICOLINE (3 MP) INTO THE DIFFERENT ANIMALS DEPENDS ON THE NATURE OF INTRODUCED PYRIDINE DERIVATIVES AND THEIR DOSE, IS CHARACTERIZED BY DEFINIT SPECIFIC PECULIARITIES AND OCCURS WITHOUT THE CHANGE IN THE ACTIVITY OF DEHYDROGENASES DEMANDING THE PYRIDINE CONTAINING COENZYMES. WITH THE SURPLUS SYNTHESIS OF PAD THE ADENILIC MOIETY OF ATP IS USED AS A STRUCTURAL MATERIAL IN AMOUNTS EXCEEDING ITS CONTENT IN LIVER TISSUE. NEW FORMATION OF PAD DEMANDS THE ADDITIVE AMOUNTS OF PHOSPHORIBOSYLPYROPHOSPHATE AS WELL AS GLUTAMINE FOR NA AMIDATION. ALL THESE PROCESSES CONDITION THE EXHAUSTING INTENSIFICATION OF THE ENERGETIC METABOLISM. THE INCREASE OF THE CONTENT OF THE LABILE PHOSPHORUS IN TISSUE TESTIFIES TO THIS FACT.

UNCLASSIFIED

APPROVED FOR RELEASE: 08/09/2001 CIA-RDP86-00513R002201310003-9"

"APPROVED FOR RELEASE: 08/09/2001 CIA-RDP86-00513R002201310003-9

1/2 030 UNCLASSIFIED PROCESSING DATE--27NOV70

TITLE--DETERMINATION OF THE RELATIVE DENSITY OF GASES ON THE BASIS OF TIME LAPSE -U-

AUTHOR-(02)-KHALOV, A.V., KHALOV, N.A.

COUNTRY OF INFO--USSR

SOURCE--KHIM. SHK. 1970, 25(1), 80-2

DATE PUBLISHED--------70

SUBJECT AREAS--PHYSICS

TOPIC TAGS--GAS DENSITY, GAS FLOW

CONTROL MARKING--NO RESTRICTIONS

DOCUMENT CLASS--UNCLASSIFIED

PROXY REEL/FRAME--2000/2238 STEP NO--UR/0509/70/025/001/0080/0082

CIRC ACCESSION NO--AP0125816

UNCLASSIFIED

APPROVED FOR RELEASE: 08/09/2001 CIA-RDP86-00513R002201310003-9"

"APPROVED FOR RELEASE: 08/09/2001 CIA-RDP86-00513R002201310003-9

2/2 030 UNCLASSIFIED PROCESSING DATE--27NOV70

CIRC ACCESSION NO--AP0125816

ABSTRACT/EXTRACT--(U) GP-0- ABSTRACT. A SIMPLE LAB. METHOD FOR THE DETN. OF GAS DENSITY BASED ON THE FLUX RATE OF EQUAL VOLS. OF GASES THROUGH A NARROW CAPILLARY TUBE WAS DESCRIBED.

UNCLASSIFIED

APPROVED FOR RELEASE: 08/09/2001 CIA-RDP86-00513R002201310003-9"

"APPROVED FOR RELEASE: 08/09/2001 CIA-RDP86-00513R002201310003-9

1/2 030 UNCLASSIFIED PROCESSING DATE--27NOV70

TITLE--DETERMINATION OF THE RELATIVE DENSITY OF GASES ON THE BASIS OF TIME LAPSE -U-

AUTHOR-(02)-KHALOV, A.V., KHALOV, N.A.

K

COUNTRY OF INFO--USSR

SOURCE--KHIM. SHK. 1970, 25(1), 80-2

DATE PUBLISHED--------70

SUBJECT AREAS--PHYSICS

TOPIC TAGS--GAS DENSITY, GAS FLOW

CONTROL MARKING--NO RESTRICTIONS

DOCUMENT CLASS--UNCLASSIFIED

PROXY REEL/FRAME--2000/2238 STEP NO--UR/0509/70/025/001/0080/0082

CIRC ACCESSION NO--AP0125816

UNCLASSIFIED

APPROVED FOR RELEASE: 08/09/2001 CIA-RDP86-00513R002201310003-9"

"APPROVED FOR RELEASE: 08/09/2001 CIA-RDP86-00513R002201310003-9

2/2 030 UNCLASSIFIED PROCESSING DATE--27NOV70

CIRC ACCESSION NO--AP0125816

ABSTRACT/EXTRACT--(U) GP-0- ABSTRACT. A SIMPLE LAB. METHOD FOR THE DETN. OF GAS DENSITY BASED ON THE FLUX RATE OF EQUAL VOLS. OF GASES THROUGH A NARROW CAPILLARY TUBE WAS DESCRIBED.

UNCLASSIFIED

APPROVED FOR RELEASE: 08/09/2001 CIA-RDP86-00513R002201310003-9"

"APPROVED FOR RELEASE: 08/09/2001 CIA-RDP86-00513R002201310003-9

USSR

UDC 539.121.72/75

VISHNEVSKIY, I. N., GAVRILYUK, V. I., KUPRYASHKIN, V. T., LATYSHEV, G. D., MAKOVETSKIY, YU. V., and KHALOV, V. G., Institute of Nuclear Research Academy of Sciences, Ukrainian SSR

"Annihilation of Positrons in Copper and Brass Subjected to Different Heat Treatments"

Kiev, Ukrainskiy Fizicheskiy Zhurnal, Vol 18, No 10, October 1973, pp 1599-1604

Abstract: Using a high-resolution magnetic spectrometer, the authors find the distributions of the annihilation quanta by energy $\rho(E)$ and the distribution of electrons by impulses n (p_z) in samples of copper and brass subjected to different heat treatments. They find that for the annealed samples of copper and brass, broader distributions are produced for $\rho(E)$ and $n(p_z)$ than for the quenched ones. This effect may be

1/2

APPROVED FOR RELEASE: 08/09/2001 CIA-RDP86-00513R002201310003-9"

"APPROVED FOR RELEASE: 08/09/2001 CIA-RDP86-00513R002201310003-9

USSR

(2)

VISHNEVSKIY, I. N., et al., Ukrainskiy Fizicheskiy Zhurnal, Vol 18, No 10, Oct 73, pp 1599-1604

used for studying the influence of the technological procedure of producing the samples on their properties. After defining the problem in the introduction, the authors give a detailed account of the method used in the investigation, after which they analyze the results. The article contains 8 figures and 6 bibliographic references.

2/2

APPROVED FOR RELEASE: 08/09/2001 CIA-RDP86-00513R002201310003-9"

"APPROVED FOR RELEASE: 08/09/2001 CIA-RDP86-00513R002201310003-9

Pharmacology and Toxicology

USSR UDC 612-06:632.95(025)

AKHMEDZHANOV, K. A., Docent and KHALPAYEV, O. SH., Chair of Hygiene, Tashkent Institute for the Advanced Training of Physicians

"Influence of Small Concentrations of Organophosphorus Compounds on an Organism"

Tashkent, Meditsinskiy Zhurnal Uzbekistana, No 8, Aug 73, pp 90-93

Abstract: Organophosphorus compounds such as the active contact preparations thiophos, metaphos, and karbophos and other highly efficient systemic insecticides methylmercaptophos, butophos phosohamide, K-74 and M-81 compounds are different from the organochlorine compounds as the former are less persistant in the surrounding environment, have a wide range of pesticidal activity and are more economical. Several studies on the exposure of humans to doses amounting to two to three times the maximum recommended doses were reviewed. Symptoms observed included a change in the EKG, arterial hypotension, vegetative dystoneia, a change in immunobiological reactions and others. Compounds such as BUZH, DDVF and DDT were considered relative to the organophorous compounds. Studies were conducted on the effects of phosphamide, chlorophos, and butophos on the physiological functions of animals by observing the changes in the cytochromic indicators of neutral leukocytes and in basic phosphatase, peroxidase, and lipid and glycogen concentrations. Large changes were observed in the cholinesterase system.

1/1

APPROVED FOR RELEASE: 08/09/2001 CIA-RDP86-00513R002201310003-9"

"APPROVED FOR RELEASE: 08/09/2001 CIA-RDP86-00513R002201310003-9

USSR K UDC: 539.125.5.172

KHALUPA, B., MIKHALETS, R., and VAVRA, YA.

"Study of Diffraction of Neutrons at the Institute for Nuclear Studies, Academy of Sciences CSSR"

Moscow, Atomnaya Energiya, Vol 28, No 5, May 70, pp 413-417

Abstract: The laboratory of the INS has performed studies of the diffraction of polarized and nonpolarized neutrons on singlecrystals in various external fields. The crystalline slow neutron spectrometer used for this work is installed in a 4-Mw reactor producing a $4 \cdot 10^{13} n/cm^2 \cdot sec$ thermal neutron flux at the center of the active zone. The equipment is described in some detail. Studies performed include the diffraction of polarized neutrons on ferromagnetic singlecrystals, including measurement of the so-called polarization ratio, and the study of diffraction phenomena during radiation capture of polarized neutrons. The interaction of neutrons with oscillating singlecrystals has also been studied, as well as the diffraction of neutrons on piezoelectrically excited singlecrystals. The diffraction of neutrons on singlecrystals excited by magnetostriction effects has also been studied.

1/1

APPROVED FOR RELEASE: 08/09/2001 CIA-RDP86-00513R002201310003-9"

"APPROVED FOR RELEASE: 08/09/2001 CIA-RDP86-00513R002201310003-9

AN0017114

UR9020

TITLE-- SCIENCE-INDUSTRY ALLIANCE

NEWSPAPER-- SOVETSKAYA LITVA, JANUARY 27, 1970, P 1, COLS 1-2

ABSTRACT-- ASSOCIATES OF THE KLAYPEDA NIGHT SCHOOL OF THE KAUNAS POLYTECHNIC INSTITUTE, HEADED BY CANDIDATE OF TECHNICAL SCIENCES E. LANGAS, JOINED V. KHALTUSHIN, CHIEF ENGINEER, N. KOMKOV, CHIEF WELDING ENGINEER, AND V. BELSKIS, SENIOR SUPERINTENDENT OF THE EXPERIMENTAL SECTION OF THE SHIPBUILDING PLANT "BALTIYA", IN DEVELOPING A NEW WELDER FOR THE PLANT.

1/1

19600321

30

APPROVED FOR RELEASE: 08/09/2001 CIA-RDP86-00513R002201310003-9"

"APPROVED FOR RELEASE: 08/09/2001 CIA-RDP86-00513R002201310003-9

USSR UDC 661.143.017

KRONGAUZ, V. G., KHALIPOVSKIY, M. D., and DESYUK, V. G.

"Thermoluminescence of Halophosphate Phosphors Due to Mercury Adsorption"

Sb. nauch. tr. VNII lyuminoforov i osobo chist. veshchestv (Collection of Scientific Works of All-Union Scientific Research Institute for Phosphors and Ultrapure Substances), 1971, vyp. 6, pp 19-22 (English summary) (from RZh-Khimiya, No 16, 25 Aug 72, Abstract No 16L137 from summary)

Translation: The authors investigated the thermally stimulated luminescence of halophosphate luminescent materials after the technological operations of fabricating a fluorescent lamp. They found high-temperature thermoluminescence with a maximum at $\sim 320^{\circ}$ C; the interaction of the phosphor with mercury vapor sufficed to cause it to appear without photoexcitation. Similar luminescence is also observable on heating of the specimens in air. This effect is due to the presence of Mn^{3+} in the luminescent materials.

1/1

APPROVED FOR RELEASE: 08/09/2001 CIA-RDP86-00513R002201310003-9"

"APPROVED FOR RELEASE: 08/09/2001 CIA-RDP86-00513R002201310003-9

Receivers and Transmitters

USSR

UDC 621.396.621.2

RUDENKO, VLADIMIR MIKHAYLOVICH; KHALYANIN, DMITRIY BORISOVICH; MAGNUSHEVSKIY, VALENTIN ROMUAL'DOVICH

"Low-Noise Input Circuits Of Microwave Receiving Devices"

Maloshumyashchiye vkhodnyye tsepi SVCh priyemnykh ustroystv (cf English above), Moscow, Izd. "Svyaz'," 1971. 280 pp, ill. 1 r 25 k.

Abstract: In the book an analysis is presented of various types of low-noise broad-band microwave amplifiers, also including the integrated type (transistorized amplifiers, amplifiers based on tunnel diodes, semiconductor parametric amplifiers, and others). The technological principles for creation of microwave integrated circuits are considered, and a computation is made of transmitting lines and various microwave devices of the integrated type. The most completely illuminated problems are connected with the construction and calculation of semiconductor parametric amplifiers. Most attention is paid to methods of synthesis of corrective networks and to methods of machine calculation of semiconductor parametric amplifiers and to optimization of their frequency characteristics. The book is intended for a wide circle of specialists occuped with planning, design, and construction of low-noise input circuits of the microwave band.

1/9

APPROVED FOR RELEASE: 08/09/2001 CIA-RDP86-00513R002201310003-9"

"APPROVED FOR RELEASE: 08/09/2001 CIA-RDP86-00513R002201310003-9

USSR

RUDENKO, VLADIMIR MIKHAYLOVICH, et al., Maloshumyashchiye vkhodnyye tsepi SVCh priyemnykh ustrovstv, Moscow, Izd. "Svyaz'," 1971. 280 pp, ill. 1 r 25 k.

CONTENTS

Foreword 6

Chapter 1. Contemporary conditions and prospects for development of input circuits of microwave receiving devices 8

1.1 General requirements for input circuits of broad-band receiving devices 8
1.2 Characteristics of various types of low-noise microwave receiving devices 12
1.3 Comparative analysis of low-noise microwave receiving devices and the trend of their development 25
Bibliography 29

Chapter 2. Input circuits of broad-band receiving devices of integrated type 31

2/9

APPROVED FOR RELEASE: 08/09/2001 CIA-RDP86-00513R002201310003-9"

"APPROVED FOR RELEASE: 08/09/2001 CIA-RDP86-00513R002201310003-9

USSR

RUDENKO, VLADIMIR MIKHAYLOVICH, et al., Maloshumyashchiye vkhodnyye tsepi SVCh priyemnykh ustrovstv, Moscow, Izd. "Svyaz'," 1971. 280 pp, ill. 1 r 25 k.

2.1 General information on integrated networks [skhema] of microwave input circuits [tsep'] 31
2.2 Characteristics of materials for integrated networks and basic requirements on them 37
2.3 Technological methods of creating integrated microwave networks 40
2.4 Microstrip lines of microwave integrated networks 47
2.5 Calculation of the parameters of microstrip networks 52
2.6 Resonance circuits of microwave integrated networks with increased selectivity 54
2.7 Some principles of construction of integrated networks of input circuits 59
Bibliography 65

Chapter 3. Integrated Transistorized Amplifiers 67

3.1 Parameters of low-noise microwave transistor and their structural peculiarities 67

3/9

APPROVED FOR RELEASE: 08/09/2001 CIA-RDP86-00513R002201310003-9"

"APPROVED FOR RELEASE: 08/09/2001 CIA-RDP86-00513R002201310003-9

USSR

RUDENKO, VLADIMIR MIKHAYLOVICH, et al., Maloshumyashchiye vkhodnyye tsepi SVCh priyemnykh ustrovstv, Moscow, Izd. "Svyaz'," 1971. 280 pp, ill. 1 r 25 k.

3.2 Calculation of the coefficients of amplification and stability of transistorized amplifiers 72
3.3 Calculation of matching circuits of broad-band transistorized amplifiers 76
3.4 One-stage and multistage integrated transistorized amplifiers 82
3.5 Balanced broad-band transistorized amplifiers 85
Bibliography 90

Chapter 4. Broad-Band Amplifiers Based On Tunnel Diodes 92

4.1 Introduction 92
4.2 General information of tunnel diodes 92
4.3 Stability of amplifiers based on tunnel diodes 109
4.4 Construction of amplifiers 116
Bibliography 122

Chapter 5. Broad-band regenerative semiconductor parametric amplifiers with one nonlinear element 124

4/9

APPROVED FOR RELEASE: 08/09/2001 CIA-RDP86-00513R002201310003-9"

"APPROVED FOR RELEASE: 08/09/2001 CIA-RDP86-00513R002201310003-9

USSR

RUDENKO, VLADIMIR MIKHAYLOVICH, et al., Maloshumyashchiye vkhodnyye tsepi SVCh priyemnykh ustrovstv, Moscow, Izd. "Svyaz'," 1971. 280 pp, ill. 1 r 25 k.

5.1 General information of methods of expansion of pass band of parametric amplifiers 124
5.2 Characteristics methods of study of parametric amplifiers 125
5.3 Maximum broad-band one-diode parametric amplifiers and converters 128
5.4 Parametric amplifiers with compensated signal and narrow-band open circuits 135
5.5 Some problems of synthesis of broad-band parametric amplifiers 138
Bibliography 144

Chapter 6. Basic Principles Of Planning Of Broad-Band Parametric Amplifiers 146

6.1 General requirements for planning of broad-band parametric amplifiers 146
6.2 Calculation of matching and compensating devices 148
6.3 Constructive calculation of broad-band parametric amplifier 155
6.4 Effect of expansion of pass band on noise properties of parametric amplifiers 162

5/9

APPROVED FOR RELEASE: 08/09/2001 CIA-RDP86-00513R002201310003-9"

"APPROVED FOR RELEASE: 08/09/2001 CIA-RDP86-00513R002201310003-9

USSR

RUDENKO, VLADIMIR MIKHAYLOVICH, et al., Maloshumyashchiye vkhodnyye tsepi SVCh priyemnykh ustrovstv, Moscow, Izd. "Svyaz'," 1971. 280 pp, ill. 1 r 25 k.

6.5 Coaxial waveguide construction of broad-band parametric amplifiers 163
Bibliography 169

Chapter 7. Mechanical Optimization Of Amplitude Frequency Characteristics Of Regenerative Amplifiers 170

7.1 Statement of problem 170
7.2 Mathematical formulation of problem 171
7.3 Parametric amplifiers with one compensating mesh [kontur] in signal circuit 174
7.4 Weak stability of parametric amplifier with compensation in signal circuit 179
7.5 Results of optimization of amplitude-frequency characteristic of parametric amplifier with assistance of electronic computer 181
Bibliography 191

6/9

APPROVED FOR RELEASE: 08/09/2001 CIA-RDP86-00513R002201310003-9"

"APPROVED FOR RELEASE: 08/09/2001 CIA-RDP86-00513R002201310003-9

USSR

RUDENKO, VLADIMIR MIKHAYLOVICH, et al., Maloshumyashchiye vkhodnyye tsepi SVCh priyemnykh ustrovstv, Moscow, Izd. "Svyaz'," 1971. 280 pp, ill. 1 r 25 k.

Chapter 8. Synthesis Of Multifunctional Matching Quadripole 192

8.1 Statement of problem 192
8.2 Idealized network of matching quadripole 193
8.3 Method of analysis 195
8.4 Wave matrix of step structure 199
8.5 Synthesis of step structure in LC approximation 203
8.6 Synthesis of step structure in an approximation of the theory of long lines 205
8.7 Synthesis of step structure with the aid of electronic computer 206
8.8 Effect of shift of reference planes with cascade connection of two quadripoles 207
Bibliography 209

Chapter 9. Cold Measurements Of Oscillating Systems Of Parametric Amplifiers 210

9.1 Introduction 210
9.2 Connection of cold and hot parameters of amplifiers 211
9.3 Cold measurements of signal circuit with one-unit compensation 215

7/9

APPROVED FOR RELEASE: 08/09/2001 CIA-RDP86-00513R002201310003-9"

"APPROVED FOR RELEASE: 08/09/2001 CIA-RDP86-00513R002201310003-9

USSR

RUDENKO, VLADIMIR MIKHAYLOVICH, et al., Maloshumyashchiye vkhodnyye tsepi SVCh priyemnykh ustrovstv, Moscow, Izd. "Svyaz'," 1971. 280 pp, ill. 1 r 25 k.

9.4 Cold measurement of open [kholostoy] mesh 219
Bibliography 225

Chapter 10. Wide-range Parametric Amplifiers And Converters, Retunable With Respect To Frequency 227

10.1 Introduction 227
10.2 Methods of retuning of the frequency of parametric amplifiers and converters 228
10.3 Parametric amplifiers and converters with synchronous retuning of frequency of signal and open mesh 234
10.4 Parametric amplifiers with ferromagnetic retuning with respect to frequency 244
10.5 Electronically retunable parametric amplifiers with combined pumping and signal conversion 248
10.6 Noise characteristics of electronically retunable regenerative parametric amplifiers 255
Bibliography 257

8/9

APPROVED FOR RELEASE: 08/09/2001 CIA-RDP86-00513R002201310003-9"

"APPROVED FOR RELEASE: 08/09/2001 CIA-RDP86-00513R002201310003-9

USSR

RUDENKO, VLADIMIR MIKHAYLOVICH, et al., Maloshumyashchiye vkhodnyye tsepi SVCh priyemnykh ustrovstv, Moscow, Izd. "Svyaz'," 1971. 280 pp, ill. 1 r 25 k.

Chapter 11. Broad-Band Integrated Semiconductor Parametric Amplifiers 259

11.1 Introduction 259
11.2 General principles of development of broad-band integrated parametric amplifiers 259
11.3 Solid state generators of pumping 261
11.4 Microminiature ferrite microwave circulators 267
11.5 Integrated parametric amplifiers with linear phase-frequency and maximum flat amplitude-frequency characteristics 269
11.6 Construction of integrated broad-band parametric amplifiers 272
11.7 Modular construction of broad-band parametric amplifiers 276
Bibliography 278

9/9

APPROVED FOR RELEASE: 08/09/2001 CIA-RDP86-00513R002201310003-9"

"APPROVED FOR RELEASE: 08/09/2001 CIA-RDP86-00513R002201310003-9

USSR

UDC 669.71.053.4

NI, L. P., GOL'DMAN, M. M., SOLENKO, T. B., BUNCHUK, L. V., KHALYAPINA, O. B.

"Oxides of Iron in the Production of Alumina"

Okisly Zheleza v Proizvodstve Glinozema [English Version Above], Alma-Ata, Nauka Press, 1971, 136 pages. (Translated from Referativnyy Zhurnal Metallurgiya, No 7, 1972, Abstract No 3G123K from the resume).

Translation: Literature and experimental data are presented on the investigation of systems including the oxides of Fe, Na, Al, Si and Ca, under hydrothermal conditions. The behavior of the oxides of Fe in hydrochemical processes of alumina production is described in detail. The production methods, composition, and structure of compounds containing Fe are presented. Particular attention is given to the chemical compounds synthesized. 43 figs; 29 tables; 392 biblio refs.

1/1

APPROVED FOR RELEASE: 08/09/2001 CIA-RDP86-00513R002201310003-9"

"APPROVED FOR RELEASE: 08/09/2001 CIA-RDP86-00513R002201310003-9

USSR UDC: 621.319.4

KHALYAPINA, Ye. A., NEKRASOVA, N. M.

"A Working Electrolyte for Aluminum Electrolytic Capacitors"

Moscow, Otkrytiya, izobreteniya, promyshlennyye obraztsy, tovarnyye znaki, No 16, Jun 71, Author's Certificate No 303662, Division H, filed 11 Oct 69, published 13 May 71, p 187

Translation: This Author's Certificate introduces a working electrolyte for aluminum electrolytic capacitors. The electrolyte is based on ethylene glycol, boric acid, adipic acid and ammonia. As a distinguishing feature of the patent, in order to stabilize the electric parameters and internal pressure of the capacitors during long-term operation, phosphoric acid is added to the electrolyte with the following ratio of components (in parts by weight): ethylene glycol--10-120, boric acid--1-10, adipic acid--1-10, ammonia--2-10, phosphoric acid--1-2.

1/1

APPROVED FOR RELEASE: 08/09/2001 CIA-RDP86-00513R002201310003-9"

"APPROVED FOR RELEASE: 08/09/2001 CIA-RDP86-00513R002201310003-9

USSR UDC 576.851.45.095

GURLEVA, G. G., DOMARADSKIY, I. V., KHALYAPINA, Ye. Ye., ALUTIN, I. M., TARANOVA, V. N., PUSHNITSA, N. P., KOL'TSOVA, Ye. G., MARCHENKOV, V. I., SHCHEGLAKOVA, N. M., and GRIGOR'YAN, E. G., Rostov-on-Don Scientific Research Antiplague Institute

"Biological Properties of Pasteurellae Isolated From Various Species of Animals"

Moscow, Zhurnal Mikrobiologii, Epidemiologii i Immunobiologii, No 11, 1971, pp 54-58

Abstract: A comparative study was performed on P. avicida, P. cuniculicida, B. avisepticus, B. suisepticus, B. bovisepticus, and B. ovisepticus (a total of 27 strains) isolated from chickens, pigs, suckling pigs, calves, steers, sheep, house mice, and rabbits in various geographic areas in 1936-1967. The tinctorial, cultural, morphological, and biochemical properties of these strains as well as their sensitivity to antibiotics, nucleotide DNA composition, and virulence to albino mice, albino rats, and pigeons revealed that they constitute a homogeneous group and belong to a single species -- P. multocida. Significantly, all the strains investigated are sensitive to colicines E+J, F, G, J+G, and S_5. If the findings are confirmed by supplementary investigations, the colicin test may well be used for a differential diagnosis of P. multocida.

APPROVED FOR RELEASE: 08/09/2001 CIA-RDP86-00513R002201310003-9"

"APPROVED FOR RELEASE: 08/09/2001 CIA-RDP86-00513R002201310003-9

USSR UDC 621.396.677

KHALZHINOV, V. D.

"Diffraction of a Plane E-Polarized Wave in an Infinitely Thin Longitudinal-Irised Cylindrical Wave Guide with a Coaxial Metallic Core"

Radiotekhnika. Resp. mezhved. temat. nauch.-tekhn. sb. (Radio Engineering. Republic Interdepartmental Thematic Scientific and Technical Collection), 1972, vyp. 20, pp 109-115 (from RZh-Radiotekhnika, No 6, Jun 72, Abstract No 5B6)

Translation: A study is made of an infinite ideally conducting cylinder with a longitudinal iris which is given by an angular value with a coaxial metallic core of smaller radius. A strict solution is presented for the problem of diffraction of a plane electromagnetic wave incident normally on the cylinder. The Rieman-Hilbert method is used to obtain an infinite system of linear algebraic equations the solution of which requires the application of a computer. The analytical expressions for the diffraction field are found in the long wave approximation. There is 1 illustration and a 5-entry bibliography.

1/1

APPROVED FOR RELEASE: 08/09/2001 CIA-RDP86-00513R002201310003-9"

"APPROVED FOR RELEASE: 08/09/2001 CIA-RDP86-00513R002201310003-9

5

USSR

UDC 616.981.455-036.21(571.62)

BUSOYEDOVA, N. M., ANTIP'YEVA, O. A., LIPAYEV, V. M., KOZLOVSKAYA, O. L., CHERNYKH, P. A., FEOKISTOV, A. Z., GRIGOROV, V. I., CHIPANIN, V. L., and KHAMAGANOV, S. A., Khabarovsk Antiplague Station

"Characteristics of Natural Foci of Tularemia in Khabarovskiy Kray"

Moscow, Zhurnal Mikrobiologii, Epidemiologii i Immunobiologii, No 4, Apr 71, pp 26-31

Abstract: A study conducted in the southern part of Khabarovskiy Kray indicated that natural foci of tularemia in forested and agricultural areas are different from those found in other parts of the USSR, because Arvicola terrestris and the common vole (Microtus arvalis) are absent, and hares and house mice are not numerous. Muskrats were found at only one focus. In forested regions the principal host is the large-toothed redbacked vole (Clethrionomys rufocanus), while the long-time reservoir and vectors are I. persulcatus and H. concinna ticks. Forest and field mice and the Siberian chipmunk were also infected. In agricultural regions the hosts are the northern redbacked and Far-Eastern vole (Clethrionomys rutilis; Microtus fortis), while D. silvarum and H. concinna ticks constitute the reservoir and vectors. A low epizootic level and still lower epidemic activity were typical for

1/2

APPROVED FOR RELEASE: 08/09/2001 CIA-RDP86-00513R002201310003-9"

"APPROVED FOR RELEASE: 08/09/2001 CIA-RDP86-00513R002201310003-9

USSR

BUSOYEDOVA, N. M., et al., Zhurnal Mikrobiologii, Epidemiologii i Immunobiologii, Vol 48, No 4, Apr 71, pp 26-31

tularemia foci in Khabarovskiy Kray in the vicinity of the Amur River. The low rate of infection of human beings was due to the absence or small numbers of classical hosts (Arvicola terrestris, common vole, and hares) with which human beings may come into contact, the absence of active and widespread epizootics, and the predominance in agricultural areas of a rodent of the secondary host group (field mouse). Of seven cases of tularemia recorded, five were of the bubonic form. In one instance the source of infection was water containing P. tularensis, and in another instance the infection was apparently due to introduction of the agent into an eye by hands soiled with rodent feces. Testing of the population at known tularemia foci with tularin resulted in a positive allergic reaction in 1.2-2.5% of cases. The agglutination reaction was positive in 2.5-5.8%, and the passive hemagglutination reaction in 3,3-9.7% of cases. The data reported were obtained in an investigation conducted during 1956-1968.

2/2

APPROVED FOR RELEASE: 08/09/2001 CIA-RDP86-00513R002201310003-9"

"APPROVED FOR RELEASE: 08/09/2001 CIA-RDP86-00513R002201310003-9

USSR UDC 616.89-008.46-053.2-085.356:577.164.1

DERGACHEV, V. V., PIVOVAROVA, G. N., KHAMAGANOVA, T. G., SHAGINYAN, Ye. V., KRASNUSHKINA, N. A., KULIKOVA, N. V., and MOKROVSKIY, V. B., Medico-Biological Faculty, Second Moscow Medical Institute imeni N. I. Pirogov and Department of Higher Nervous Activity Institute of Hygiene of Children and Adolescents, Ministry of Health USSR

"Orotic and Folic Acids and Vitamin B_{12} in the Treatment of Children with Memory Disorders"

Moscow, Sovetskaya Meditsina, Vol 33, No 7, Jul 70, pp 78-82

Abstract: Since the genetic apparatus contained in all cells preserves not only phylogenetic but also ontogenetic information, and since nucleoproteins and nucleic acids are essential constituents of the memory mechanism, a study was undertaken in which the cofactors and precursors of proteins and nucleic acids -- orotic acid, folic acid, and vitamin B_{12} -- were administered to a group of children with disturbed memory. The results indicated, that even though short-term memory, attention, and certain other mental functions were not affected, long-term memory improved significantly. Positive results can be obtained only if treatment is begun early, before marked organic changes develop in the central nervous system.

1/1 - END -

5915
CSO: 1840

APPROVED FOR RELEASE: 08/09/2001 CIA-RDP86-00513R002201310003-9"

"APPROVED FOR RELEASE: 08/09/2001 CIA-RDP86-00513R002201310003-9

USSR

UDC 621.373.826:621.317.1

VRBOVA, M. and KHAMAL, K.

"Method for Measuring the Form of Nanosecond Duration Pulses"

V sb. Nelineyn. protsessy v optike (Nonlinear Processes in Optics — collection of works), Novosibirsk, 1972, vyp.2, pp 67-69 (from RZh-Radiotekhnika. No 11, Nov 72, Abstract No 11 A244)

Translation: The authors propose a method for measuring a third order correlation function. The function makes it possible to determine the shape of a light pulse using the two-dimensional dependence of the intensity of 3-photon fluorescence which takes place in a solution through which pass three plano-parallel beams with equal polarization. The beams are obtained by splitting the output laser beam. A.K.

1/1

APPROVED FOR RELEASE: 08/09/2001 CIA-RDP86-00513R002201310003-9"

"APPROVED FOR RELEASE: 08/09/2001 CIA-RDP86-00513R002201310003-9

USSR

UDC 629.78:526.2+525.7

BOLDYREV, V. G. and KHAMARIN, V. I.

"Utilization of Satellite Radar Measurements in the Analysis of Ground-Level Temperature"

Tr. Gidrometeorol. N.-I. Tsentr SSSR (Works of the Hydrometeorological Scientific Research Center, USSR), No 89, 1972, pp 12-21 (from Referativnyy Zhurnal, Issledovaniye Kosmicheskogo Prostranstva, No 5, May 72, Abstract No 5.62.280, Resume)

Translation: A brief analysis is given of the state of the problem of determination of the ground-level temperature from artificial earth satellites. Consideration is given to some possibilities of utilizing measurements of self-radiation of the earth's surface (in transparency "windows" of the atmosphere) for objective analysis of the ground-level temperature field. Estimates of errors of interpolation and extrapolation of the temperature for underlying surfaces of various types are presented. 13 references.

1/1

APPROVED FOR RELEASE: 08/09/2001 CIA-RDP86-00513R002201310003-9"

"APPROVED FOR RELEASE: 08/09/2001 CIA-RDP86-00513R002201310003-9

1/2 026 UNCLASSIFIED PROCESSING DATE--13NOV70

TITLE--SYNTHESIS AND STUDY OF THE ANISOTROPY OF POLARIZABILITY AND DIPOLE MOMENTS OS SOME COMPOUNDS OF THE ENDOXOCYCLOHEXANE SERIES -U-

AUTHOR-(04)-VERESHCHAGIN, A.N., GROZINA, L.A., KHAMATULLINA, L.M., ARBUZOV, B.A.

COUNTRY OF INFO--USSR

SOURCE--IZV. AKAD. NAUK SSSR, SER. KHIM. 1970, (4), 792-7

DATE PUBLISHED--------70

SUBJECT AREAS--CHEMISTRY

TOPIC TAGS--ANISOTROPY, DIPOLE MOMENT, ORGANIC SYNTHESIS, CYCLOHEXANE, FURAN, OXIDATION, PHTHALIC ACID, EPOXY COMPOUND, DIELECTRIC PROPERTY, NITRILE

CONTROL MARKING--NO RESTRICTIONS

DOCUMENT CLASS--UNCLASSIFIED

PROXY REEL/FRAME--3006/1003 STEP NO--UR/0062/70/000/004/0792/0797

CIRC ACCESSION NO--AP0134715

UNCLASSIFIED

APPROVED FOR RELEASE: 08/09/2001 CIA-RDP86-00513R002201310003-9"

"APPROVED FOR RELEASE: 08/09/2001 CIA-RDP86-00513R002201310003-9

2/2 026 UNCLASSIFIED PROCESSING DATE--13NOV70

CIRC ACCESSION NO--AP0134715

ABSTRACT/EXTRACT--(U) GP-0- ABSTRACT. CONVENTIONALLY PREPD. DIELS ALDER ADDUCTS OF FURAN WERE OXIDIZED WITH HCO SUB2 H,H SUB2 O TO TRANS,1,2,DICYANO,4,5,EPOXY,3,6,ENDOXOCYCLOHEXANE, M. 124-6DEGREES, AND THE CIS ISOMER, M. 123-4DEGREES, WHOSE DIPOLE MOMENTS, FROM DIELEC. DATA, WERE, RESP., 2.92 AND 5.62 D. THE FOLLOWING DIPOLE MOMENTS AND KERR CONSTS. (M PRIMEKX1012), RESP., WERE REPORTED: 3,6 ENDOXO,DELTA PRIME4,TETRAHYDROPHTHALIC ANHYDRIDE, 5.53, NEGATIVE 99.6; TRANS,1,2,DICYANO,3,6,ENDOXO,4,CYCLOHEXENE, 3.18, 65.8; CIS ISOMER, 5.55, 468.7; TRANS,1,3,DICYANO,4,5,EPOXY,3,6,ENDOXOCYCLOHEXANE, 2.92, NEGATIVE 31.8; CIS ISOMER, 5.62, 404.2; AND 4,5,EPOXY,3,6,ENDOXOHEXA,HYDROPHTHALIC ACID, 4.03 NEGATIVE. OXIDN. OF DIELS ALDER ADDUCTS OF FURAN WITH DINITRILES YIELDS EXO EPOXY DERIVS.

FACILITY: KAZAN. GOS. UNIV. IM. UL'YANOVA-LENINA, KAZAN, USSR.

UNCLASSIFIED

APPROVED FOR RELEASE: 08/09/2001 CIA-RDP86-00513R002201310003-9"

"APPROVED FOR RELEASE: 08/09/2001 CIA-RDP86-00513R002201310003-9

1/2 027 UNCLASSIFIED PROCESSING DATE--04DEC70

TITLE--DEPOSITION OF THIN NICKEL,IRON FILMS DURING UNSTEADY STATE ELECTRODE REACTIONS -U-

AUTHOR-(03)-KHAMAYEV, V.A., KRIVTSOV, A.K., KOTOV, V.L.

COUNTRY OF INFO--USSR

K

SOURCE--IZV. VYSSH. UCHEB. ZAVED., KHIM. KHIM. TEKHNOL. 1970, 13(2), 240-4

DATE PUBLISHED--------70

SUBJECT AREAS--MATERIALS, MECH., IND., CIVIL AND MARINE ENGR

TOPIC TAGS--NICKEL ALLOY, IRON ALLOY, METAL FILM, ELECTRODEPOSITION, ELECTROLYTE

CONTROL MARKING--NO RESTRICTIONS

DOCUMENT CLASS--UNCLASSIFIED

PROXY REEL/FRAME--3005/0846 STEP NO--UR/0153/70/013/002/0240/0244

CIRC ACCESSION NO--AT0132936

UNCLASSIFIED

APPROVED FOR RELEASE: 08/09/2001 CIA-RDP86-00513R002201310003-9"

"APPROVED FOR RELEASE: 08/09/2001 CIA-RDP86-00513R002201310003-9

2/2 027 UNCLASSIFIED PROCESSING DATE--04DEC70

CIRC ACCESSION NO--AT0132936

ABSTRACT/EXTRACT--(U) GP-0- ABSTRACT. A THIN NI-FE ALLOY CONTG. 20-35 AT. PERCENT FE IS DEPOSITED FROM ELECTROLYTES CONTG. EITHER 2.5N NISO SUB4, 1N NA SUB2 SO SUB4, 0.4M H SUB3 BO SUB3, 1N HCL, AND 0.07M FE PRIME2 POSITIVE, OR 2N NICL SUB2, 0.4M H SUB3 BO SUB3, AND 0.1M FE PRIME2 POSITIVE AT 20DEGREES AND PH 2.0-2.5. ASCORBIC ACID, 0.7 G-L., IS ADDED TO OXIDIZE FE PRIME2 POSITIVE TO FE PRIME3 POSITIVE. USE OF A PULSED CURRENT OF PROPER WAVE FORM RESULTS IN INCREASING THE FE CONCN. IN THE ALLOY. FOR THE SAME C.D. IN THE RANGE 3-20 A-DM PRIME2, THE PERCENT FE IS A FEW PERCENT HIGHER WITH THE SO SUB4 PRIME2 NEGATIVE THAN WITH THE CL PRIME NEGATIVE ELECTROLYTE. AT 45DEGREES, THE FE CONTENT OF THE DEPOSIT IS LOWER THAN AT 20DEGREES. FOR THIN DEPOSITS OF ALLOY, THE VELOCITY OF DISCHARGE OF FE, NI, AND H IONS IS RELATIVE TO THE NATURE OF THE SUPPORTING MATERIAL. FACILITY: IVANOV. KHIM-TEKHNOL. INST., IVANOVO, USSR.

UNCLASSIFIED

APPROVED FOR RELEASE: 08/09/2001 CIA-RDP86-00513R002201310003-9"

"APPROVED FOR RELEASE: 08/09/2001 CIA-RDP86-00513R002201310003-9

USSR UDC 539.385

TROSHCHENKO, V.T., KHAMAZA, L.A. and SHESTOPAL, L.F., Institute of Metallurgy imeni A.A. Baykov, Academy of Sciences USSR

"Study of Deformation Criteria for Fatigue Failures of Metals in Extension-Compression and Torsion Tests"

Moscow, Sb. "Ustalost' metallov i splavov", "Nauka" Press, 1971, pp 31-41

Translation: Described is a method of studying inelastic deformations and the irreversibly dispersed energy in fatigue tests using extension-compression and torsion. The data on fatigue and inelasticity of EI612 and EI437 alloys are presented in the form of cyclic deformation diagrams and fatigue curves based on various strength theories. It is shown that the cyclic deformation diagrams obtained by extension-compression and torsion in the low elastic-plastic deformation region show best agreement in octahedral stresses-octahedral coordinates. (6 illustrations, 2 tables; summary).

1/1

APPROVED FOR RELEASE: 08/09/2001 CIA-RDP86-00513R002201310003-9"

"APPROVED FOR RELEASE: 08/09/2001 CIA-RDP86-00513R002201310003-9

USSR

UDC 539.4

TROSHCHENKO, V. T., AFONIN, A. I., and KHAMAZA, L. A., Kiev

"Investigation of Fatigue Failure Energy Criteria for Certain Metals at Low and High Loading Frequencies"

Kiev, Problemy Prochnosti, No 6, 1973, pp 3-7

Abstract: Results are presented from an investigation into the fatigue strength and energy dissipation in the process of cyclic loading of nickel alloys EI826 and EI437B and steel 1Kh17N2Sh when tested at very different loading frequencies -- 16 hz and 10 khz. An analysis is given on existing energy criteria of fatigue failure in metals which was based on consideration of irreversible energy dissipation in the process of cyclic loads. It is shown that the functional relationship

$$N_p/D - D_r(D/D_r)^{\alpha} / = \text{constant}$$

can be used as the criteria of fatigue failure in metals. This relationship is independent of loading frequency and number of cycles. 4 figures, 1 table, 12 bibliographic references.

1/1

APPROVED FOR RELEASE: 08/09/2001 CIA-RDP86-00513R002201310003-9"

"APPROVED FOR RELEASE: 08/09/2001 CIA-RDP86-00513R002201310003-9

USSR UDC 539.385

TROSHCHENKO, V. T., KHAMAZA, L. A., SHESTOPAL, L. F.

"Investigation of Deformation Criteria for the Fatigue Fracture of Metals Under Tension-Compression and Twisting"

V sb. Ustalost' met. i splavov (Fatigue of Metals and Alloys -- Collection of Works), Moscow, "Nauka", 1971, pp 31-41 (from RZh-Mekhanika, No 12, Dec 71, Abstract No 12V1459)

Translation: A technique is described for investigating inelastic deformations and irreversibly scattered energy in metals during tests for fatigue under tension-compression and twisting. Results of a study of fatigue and inelasticity of EI612 and EI437B alloys are given which are represented in the form of diagrams of the cyclic deformation and fatigue curves in accordance with various strength theories. It is shown that cyclic deformation diagrams for tension-compression and twisting in the region of small elastic-plastic deformations are closer to the coordinates of octahedral stresses-octahedral shift. Authors' abstract.

1/1

APPROVED FOR RELEASE: 08/09/2001 CIA-RDP86-00513R002201310003-9"

"APPROVED FOR RELEASE: 08/09/2001 CIA-RDP86-00513R002201310003-9

Materials

USSR

UDC 431.3

TROSHCHENKO, V. T., GETMAN, A. F., KHAMAZA, L. A., Kiev

"Study of Load-Bearing Ability of Specimens in Continuous Stressed State With Cyclical Elastic-Plastic Deformation"

Kiev, Problemy Prochnosti, No 12, Dec 70, pp 14-19

Abstract: A study is made of the influence of stress redistribution caused by the presence of cyclical nonelastic deformations on the load-bearing capacity of cylindrical specimens of steels types 40KH, E1612 and E1437B alloy at 20°C, steel type E1612 at 600°C and E1437B alloy at 700°C with circular bending in the range of 10^5-10^7 loading cycles to rupture. A method is developed for considering nonelastic cyclical deformations in calculating the limiting load-bearing capacity of cylindrical specimens for the case of cyclical bending. It is demonstrated that the actual bending stresses for this number of loading cycles to rupture is considerably higher than the corresponding stresses in extension and compression, resulting from the influence of the stress gradient.

1/1

APPROVED FOR RELEASE: 08/09/2001 CIA-RDP86-00513R002201310003-9"

"APPROVED FOR RELEASE: 08/09/2001 CIA-RDP86-00513R002201310003-9

USSR

KHAMIDOV, A., ASER'YANTS, B. S., and YAKUBOV, I. M., Chair of Microbiology, Andizhan Medical Institute, Andizhan

"Clinical and Epidemiological Characteristics of Q-Fever in Rishtanskiy Rayon, Ferganskaya Oblast'"

Tashkent, Meditsinskiy Zhurnal Uzbekistana, No 1, Jan 73, pp 38-39

Abstract: In Mar-Apr 69 an outbreak of Q-fever occurred at a village in the Rishtansk Rayon, Fergana Oblast', among pupils and teachers of a school, of whom 77 were affected. The majority of the patients (64) were 8-15 years of age. There were 69 mild cases and 8 cases of medium severity. The patients exhibited a positive reaction of complement fixation with an antigen derived from Rickettsia burnetti, with the titer of the reaction increasing as the disease progressed. This indicated with certainty that the disease in question was Q-fever. Ten of 76 heads of cattle kept by private owners in the vicinity of the school had a positive complement fixation reaction towards R. burnetti. Furthermore, R. burnetti were isolated from the placenta of one cow. Evidently the outbreak occurred as a result of contact with infected cattle and because of the consumption at the school of raw milk and dairy products derived from such cattle.

1/1

APPROVED FOR RELEASE: 08/09/2001 CIA-RDP86-00513R002201310003-9"

"APPROVED FOR RELEASE: 08/09/2001 CIA-RDP86-00513R002201310003-9

USSR UDC 591.81:577.391

KHAMIDOV, D. K., KHAKIMOV, P. A., KOLESNIKOVA, S. S., and MAMATALIYEV, U., ~~Institute of~~ Biochemistry, UzbekSSR Academy of Sciences

"Study of the Effect of Ionizing Radiation on the Mitotic Activity of Cells in a Culture"

Tashkent, Uzbeskiy Biologicheskiy Zhurnal, No 2, 1971, pp 10-12

Abstract: Plant growth and development are stimulated by the action of comparatively low doses of ionizing radiation. The crop yield is likewise enhanced. Together with the increase in biomass, the cell dimensions are increased. Similar results were obtained in the irradiation of bacteria. The authors set out to study the effect of comparatively low doses of gamma-radiation on the mitotic activity of cells under culture conditions. Ascitic cancer cells (Ehrlich) and human cancer cells (HeLa) were used in the study. The mitotic activity of the former was determined during 6-7 days of development, after preliminary introduction of 0.3 ml (at a concentration of $60-70 \cdot 10^6$ cell/ml) into each test animal. It was found that irradiation with 25 roentgen produced acceleration of the mitotic activity of both types of cells studied (43-45% increase in the HeLa cells, 28% increase in the Ehrlich cells). Acceleration of cell division activity was observed with radiation doses of

1/2

APPROVED FOR RELEASE: 08/09/2001 CIA-RDP86-00513R002201310003-9"

"APPROVED FOR RELEASE: 08/09/2001 CIA-RDP86-00513R002201310003-9

USSR

KHAMIDOV, D. K., et al., Uzbekskiy Biologicheskiy Zhurnal, No 2, 1971, pp 10-12

up to 100 roentgen. With doses of 100-300 roentgen, the number of dividing cells was equal to that of the normal cells. However, the number of cells approaching the prophase increased and the amount of metaphase lamellae remained unchanged. With a dose of 600 roentgen, some inhibition of mitotic cell division was observed. The nuclei were pyknotic. The number of granular lumps of DNA was decreased. With a dose of 3 Kr, no mitoses were observed. The acceleration of cell division under the effect of low gamma-radiation doses is attributed to an increase in content and synthesis of nucleic acids in the cell. The authors propose that low doses of ionizing radiation stimulate the transmission of the G_1 period of cells or the entry of the cells

or the entry of the cells into the cellular cycle out of the G_0 period of mitotic cell division. It is possible, in the opinion of the authors, that with low gamma-radiation doses, small quantities of radiation anabolites are formed, which effect the life activity of the cells.

2/2

APPROVED FOR RELEASE: 08/09/2001 CIA-RDP86-00513R002201310003-9"

"APPROVED FOR RELEASE: 08/09/2001 CIA-RDP86-00513R002201310003-9

USSR K UDC 581.19:616-006:577.391

KHAMIDOV, D. KH., KHAKIMOV, P. A., and MAMATALIYEV, U., Institute ~~of Biochemistry~~, Academy of Sciences, Uzbek SSR

"Cytofluorometric Study of Nuclear DNA Proteins in Cell Cultures Exposed to Ionizing Radiation"

Tashkent, Uzbekskiy Biologicheskiy Zhurnal, No 2, 1970, pp 7-10

Abstract: Study of the dynamics of radiation injury to Ehrlich ascites cancer and HeLa cells showed that the intensity of luminescence of the nuclei varied with the radiation dose and time since exposure. For example, the luminescence of Ehrlich ascites nuclei increased at a dose of 0.5 kr, reaching a peak at 3 kr, but slowed with further increase in the dose (6 kr). The intensity of luminescence increased 30 min after exposure, reaching a peak after two hours, and decreasing after four hours. DNA and the main protein were found to affect the intensity of secondary luminescence of both normal and irradiated cells. After DNA was removed from the nuclei by treating them with DNAse, the intensity of luminescence sharply decreased

1/1

APPROVED FOR RELEASE: 08/09/2001 CIA-RDP86-00513R002201310003-9"

"APPROVED FOR RELEASE: 08/09/2001 CIA-RDP86-00513R002201310003-9

1/2 028 UNCLASSIFIED PROCESSING DATE--27NOV70

TITLE--CYTOFLUORIMETRIC INVESTIGATIONS OF NUCLEAR DNA PROTEINS IN CULTURED CELLS EXPOSED TO IONIZING RADIATION -U-

AUTHOR-(03)-KHAMIDOV, D.KH., MAMATALIYEV, U., KHAKIMOV, P.A.

COUNTRY OF INFO--USSR

SOURCE--UZB. BIOL. ZH. 1970, 14(2), 7-10

DATE PUBLISHED--------70

SUBJECT AREAS--BIOLOGICAL AND MEDICAL SCIENCES

TOPIC TAGS--DNA, RADIATION DAMAGE, FLUORESCENCE, CELL PHYSIOLOGY, NUCLEUS, IONIZING RADIATION, COBALT ISOTOPE

CONTROL MARKING--NO RESTRICTIONS

DOCUMENT CLASS--UNCLASSIFIED

PROXY REEL/FRAME--3008/0446 STEP NO--UR/9079/70/014/002/0007/0010

CIRC ACCESSION NO--AP0137537

UNCLASSIFIED

APPROVED FOR RELEASE: 08/09/2001 CIA-RDP86-00513R002201310003-9"

"APPROVED FOR RELEASE: 08/09/2001 CIA-RDP86-00513R002201310003-9

2/2 028 UNCLASSIFIED PROCESSING DATE--27NOV70

CIRC ACCESSION NO--AP0137537

ABSTRACT/EXTRACT--(U) GP-0- ABSTRACT. INVESTIGATION OF THE DYNAMICS OF RADIATION DAMAGE IN EHRLICH ASCITES AND HELA CELLS HAS SHOWN THAT THE INTENSITY OF FLUORESCENCE OF CELL NUCLEI INCREASES IN PROPORTION TO THE RADIATION DOSE AND TIME AFTER IRRADN. PRIME60 CO GAMMA IRRADN. WAS EMPLOYED AT DOSES OF 0.5, 1, 3, AND 6KR, AT A DOSE RATE OF 15 R-SEC. CELLS SMEARS WERE FIXED AND STAINED WITH ACRIDINE ORANGE, AND THE INTENSITY OF FLUORESCENCE OF CELL NUCLEI MEASURED ON A CYTOFLUORIMETER. PARTIAL DNA EXTN. WAS ACHIEVED BY MEANS OF DNASE TREATMENT, AND HISTONES WERE REMOVED FROM THE NUCLEI WITH TRYPSIN. MAX. INCREASE IN SECONDARY FLUORESCENCE IN EHRLICH ASCITES CELLS WAS OBSD. AT A DOSE OF 3 KR; THE MAX. INTENSITY OCCURRED 2 HR AFTER IRRADN. AFTER TREATMENT WITH DNASE, THE INTENSITY OF FLUORESCENCE DECREASED MARKEDLY (2.3 TIMES, IN COMPARISON WITH LEVELS OBSD. 2 HR AFTER IRRADN. WITH 3 KR). AFTER TRYPSINIZATION, THE INTENSITY INCREASED 35PERCENT IN COMPARISON WITH THAT OF CELLS TREATED ONLY WITH DNASE. COMPARISON WITH NONIRRADIATED CONTROL CELLS SUGGESTS THAT AFTER EXPOSURE TO IONIZING RADIATION, THE RATIO BETWEEN DNA AND PROTEINS CHANGES AND METABOLISM IN THE IRRADIATED CELLS IS SHARPLY DISTURBED. FACILITY: INST. BIOKHIM., TASHKENT, USSR.

UNCLASSIFIED

APPROVED FOR RELEASE: 08/09/2001 CIA-RDP86-00513R002201310003-9"

"APPROVED FOR RELEASE: 08/09/2001 CIA-RDP86-00513R002201310003-9

1/2 020 UNCLASSIFIED PROCESSING DATE--20NOV70

TITLE--HISTOCHEMICAL FEATURES OF THE KIDNEYS OF ADRENALECTOMIZED ANIMALS FOLLOWING ADMINISTRATION OF DOCA DECXYCORTICOSTERONE ACETATE -U-

AUTHOR-(04)-ZUFAROV, K.A., KHAMIDOV, D.KH., AKHMADZHANOVA, M.M., KUZNETSOVA, L.G.

COUNTRY OF INFO--USSR

SOURCE--UZB. BIOL. ZH. 1970, 14(2), 70-1

DATE PUBLISHED--------70

SUBJECT AREAS--BIOLOGICAL AND MEDICAL SCIENCES

TOPIC TAGS--HISTOCHEMISTRY, CORTICOSTEROID, KIDNEY, RNA, RAT, ADRENAL GLAND

CONTROL MARKING--NO RESTRICTIONS

DOCUMENT CLASS--UNCLASSIFIED

PROXY REEL/FRAME--3002/0417 STEP NO--UR/9079/70/014/002/0070/0071

CIRC ACCESSION NO--AP0127988

UNCLASSIFIED

APPROVED FOR RELEASE: 08/09/2001 CIA-RDP86-00513R002201310003-9"

"APPROVED FOR RELEASE: 08/09/2001 CIA-RDP86-00513R002201310003-9

2/2 02C UNCLASSIFIED PROCESSING DATE--20NOV70

CIRC ACCESSION NO--AP0127988

ABSTRACT/EXTRACT--(U) GP-0- ABSTRACT. DOCA ADMINISTERED FOR 2 WEEKS POSTOPERATIVE DECREASED THE RENAL RNA CONTENT OF ADRENALECTOMIZED RATS TO A LESS EXTENT THAN IN UNTREATED ADRENALECTOMIZED RATS. CHANGES IN THE CHEM. COMPONENTS OF THE KIDNEY CELLS OF ADRENALECTOMIZED RATS ARE PROBALY DUE TO THE ABSENCE OF GLUCOCORTICOIDS AS WELL AS TO THE ABSENCE OF MINERALOCORTICOIDS. FACILITY: INST. BIOKHIM., TASHKENT, USSR.

UNCLASSIFIED

APPROVED FOR RELEASE: 08/09/2001 CIA-RDP86-00513R002201310003-9"

"APPROVED FOR RELEASE: 08/09/2001 CIA-RDP86-00513R002201310003-9

K

UDC 591.046:591.436:599.323.4

USSR

KHAMIDOV, D. Kh., MIRAKHMEDOW, A. K., and NEGANOVA, N. L., Institute of Biochemistry, Academy of Sciences Uzbek SSR

"Results of Histochemical Study of Glycogen and the Fine Structure of Irradiated Rat Liver Cells"

Tashkent, Uzbekskiy Biologicheskiy Zhurnal, No 3, 1970, pp 25-28

Abstract: The fine structure of irradiated rat liver cells was investigated. The rats were irradiated in two groups: one group with a lethal dose and the other group with sublethal doses of Co^{60} gamma-rays. Experiments were conducted on white randombred male rats weighing 150-200 g, with doses of 400 and 1200 r (dose rate 18-20 r/sec). Five days after irradiation with a dose of 400 r, marked accumulation of a large number of large glycogen granules was observed in hepatocytes, where they were arranged compactly in some cells, and loosely in others. At the peak of radiation sickness (10 days after irradiation), the number of glycogen granules dropped sharply. Fifteen days after irradiation, there was a tendency to normalization in some lobes, and a pronounced glycogen content compared with the normal state and especially with the peak period of radiation sickness. Thus, variation in the content of glycogen granules in hepatocytes

1/2

APPROVED FOR RELEASE: 08/09/2001 CIA-RDP86-00513R002201310003-9"

"APPROVED FOR RELEASE: 08/09/2001 CIA-RDP86-00513R002201310003-9

USSR

KHAMIDOV, D. Kh., et al, Uzbekskiy Biologicheskiy Zhurnal, No 3, 1970, pp 25-28

upon irradiation with lethal and sublethal doses occurs in parallel with the response of cellular organelles to irradiation. These shifts, detected histochemically, were confirmed by data obtained with the electron microscope.

2/2

APPROVED FOR RELEASE: 08/09/2001 CIA-RDP86-00513R002201310003-9"

"APPROVED FOR RELEASE: 08/09/2001 CIA-RDP86-00513R002201310003-9

UDC 591.1.15

USSR

KHAMIDOV, D. KH., KHAKIMOV, P. A., and MAMATALIYEV, U.

"Luminescent Cytochemical Study of the Adrenal Cortex Proteins Subjected to Ionizing Radiation"

Tashkent, Doklady Akademii Nauk UzSSR, No 7, 1972, pp 58-60 (from Referativnyy Zhurnal -- Biologicheskaya Khimiya, No 22, 1972, Abstract No 22F1604)

Translation: Concentration of high-molecular proteins in sections of the adrenal cortex of white male rats was studied 1, 6, 18, 24 hr, and 3, 7, 14, and 30 days after γ-radiation (^{60}Co) with doses of 50, 100, 200, 400, 900, and 1200 r. The obtained results showed that the function of the cortex layer of adrenal glands increases soon after the irradiation, even in the case of large doses (900-1200 r). The biosynthesis of hormones by the adrenal glands was inhibited at later dates, and it was accompanied by a quantitative decrease of proteins in the adrenal cortex cells.

1/1

APPROVED FOR RELEASE: 08/09/2001 CIA-RDP86-00513R002201310003-9"

"APPROVED FOR RELEASE: 08/09/2001 CIA-RDP86-00513R002201310003-9

1/2 016 UNCLASSIFIED PROCESSING DATE--23OCT70

TITLE--EPR STUDY OF FREE RADICALS IN GAMMA IRRADIATED COTTON CELLULOSE -U-

AUTHOR-(03)-KHAMIDOV, D.S., AZIZOV, U.A., MILINCHUK, V.K.

K

COUNTRY OF INFO--USSR

SOURCE--UZB. KHIM. ZH. 1970, 14(1), 39-42

DATE PUBLISHED--------70

SUBJECT AREAS--BIOLOGICAL AND MEDICAL SCIENCES

TOPIC TAGS--EPR, FREE RADICAL, GAMMA RAY, FIBER PLANT, CELLULOSE

CONTROL MARKING--NO RESTRICTIONS

DOCUMENT CLASS--UNCLASSIFIED

PROXY REEL/FRAME--1999/0407 STEP NO--UR/0291/70/014/001/0039/0042

CIRC ACCESSION NO--AP0122587

UNCLASSIFIED

APPROVED FOR RELEASE: 08/09/2001 CIA-RDP86-00513R002201310003-9"

"APPROVED FOR RELEASE: 08/09/2001 CIA-RDP86-00513R002201310003-9

2/2 016 UNCLASSIFIED PROCESSING DATE--23OCT70

CIRC ACCESSION NO--AP0122587

ABSTRACT/EXTRACT--(U) GP-0- ABSTRACT. EPR SPECTRA OF CELLULOSE IRRADIATED WITH GAMMA RAYS AT 77-300DEGREESK ARE DISCUSSED AND INTERPRETED. THE EVIDENCE IS PRESENTED IN SUPPORT OF THE EXISTENCE OF CH SUB2 OH, CHO, AND I FREE RADICALS.

UNCLASSIFIED

APPROVED FOR RELEASE: 08/09/2001 CIA-RDP86-00513R002201310003-9"

"APPROVED FOR RELEASE: 08/09/2001 CIA-RDP86-00513R002201310003-9

1/2 033 UNCLASSIFIED PROCESSING DATE--04DEC70

TITLE--CHARACTERISTICS OF A DISCHARGE ON THE SURFACE OF SOLID INSULATION IN A VACUUM -U-

AUTHOR--KHAMIDOV, N.

COUNTRY OF INFO--USSR

SOURCE--IZV. AKAD. NAUK UZB. SSR. SER. TEKH. NAUK 1970, 14(1), 23-5

DATE PUBLISHED--------70

SUBJECT AREAS--MATERIALS

TOPIC TAGS--ELECTRIC DISCHARGE, POLYMETHYLMETHACRYLATE, PORCELAIN, VINYL RESIN, FLUOROCARBON RESIN, ELECTRIC PROPERTY, VACUUM, INSULATING MATERIAL

CONTROL MARKING--NO RESTRICTIONS

DOCUMENT CLASS--UNCLASSIFIED

PROXY REEL/FRAME--3008/1000 STEP NO--UR/0167/70/014/001/0023/0025

CIRC ACCESSION NO--AP0138028

UNCLASSIFIED

APPROVED FOR RELEASE: 08/09/2001 CIA-RDP86-00513R002201310003-9"

"APPROVED FOR RELEASE: 08/09/2001 CIA-RDP86-00513R002201310003-9

2/2 033 UNCLASSIFIED PROCESSING DATE--04DEC70

CIRC ACCESSION NO--AP0138028

ABSTRACT/EXTRACT--(U) GP-0- ABSTRACT. THE DISCHARGE VOLTAGE, BREAKDOWN VOLTAGE, SPARK FORMATION VOLTAGE, AND DEGREE OF ELEC. CONDITION OF VINIPLAST, FTOROPLAST, POLY(ME METHACRYLATE), AND PROCELAIN WERE MEASURED IN AN EVACUATED METAL COMPARTMENT AT 2-4 TIMES 10 NEGATIVE PRIME5 MM. A RELATION BETWEEN THE DIMENSIONS OF THE POLYMER SAMPLES AND THEIR ELEC. PROPERTIES WAS ESTABLISHED. FACILITY: INST. YAD. FIZ., TASHKENT, USSR.

UNCLASSIFIED

APPROVED FOR RELEASE: 08/09/2001 CIA-RDP86-00513R002201310003-9"

"APPROVED FOR RELEASE: 08/09/2001 CIA-RDP86-00513R002201310003-9

USSR UDC 577.1:615.7/9

KHAMIDOV, S. D.

"Activity of Ribonuclease and Deoxyribonuclease in the Blood Serum of Sheep in Normal Condition and After Administration of the Serum-Containing Protector"

Tr. Vses. in-ta eksperim. vet. (Collection of Works of the All-Union Institute of Experimental Veterinary Science), No 39, 1972, pp 295-298 (from Referativnyy Zhurnal -- Biologicheskaya Khimiya, Otdel'nyy Vypusk, No 19, 1972, Abstract No 19F2072)

Translation: The activity of acid DNA-ase (pH 5.2), neutral DNA-ase (pH 7.4), acid RNA-ase (pH 5.8), and alkaline RNA-ase (pH 7.8) in the blood serum of sheep (5 animals were studied) was 0.6-4.7, 0.5-3.5, 0.8-6.0, and 4.2-14.0 units/mg of protein, respectively. After animals were injected (subcutaneously) with the serum-containing protector (1 ml./kg body weight) the above indicators were 3.3-3.5, 3.8-8.6, 8.0, and 20.5-22.5 units/mg of protein, respectively, during the first 2-4 days.

1/1

APPROVED FOR RELEASE: 08/09/2001 CIA-RDP86-00513R002201310003-9"

"APPROVED FOR RELEASE: 08/09/2001 CIA-RDP86-00513R002201310003-9

USSR

KHAMIDOVA, M. Kh. and AVAZMATOVA, F. K., Chair of Eye Diseases, Tashkent Medical Institute

"Toxoplasmosis and Associated Eye Diseases"

Tashkent, Meditsinskiy Zhurnal Uzbekistana, No 11, 1971, pp 35-38

Abstract: Eye diseases following toxoplasmosis are fairly common in Uzbekistan and the diagnosis is quite difficult. Toxoplasmosis may be congenital or acquired. The complement fixation test with toxoplasmin was used to examine 120 children and adults with a variety of eye disorders of unknown etiology. In 56 children suspected of congenital toxoplasmosis, it was positive in 31 or 55.3%. In adults with untreated acute or chronic eye diseases, it was positive in 22, or 34.3%. Thus, the complement-fixation test was positive in 53, or 43.2% of the 120 individuals suspected of having toxoplasmosis. The most effective therapy is administration of chloridine combined with sulfadimezin, but only in the earliest stages of the diseases.

1/1

APPROVED FOR RELEASE: 08/09/2001 CIA-RDP86-00513R002201310003-9"

"APPROVED FOR RELEASE: 08/09/2001 CIA-RDP86-00513R002201310003-9

UNCLASSIFIED PROCESSING DATE--02OCT70

1/2 023

TITLE--SEARCH OF THE RAPID SPATIAL VARIATIONS OF THE INTENSITY OF THE OXYGEN GREEN LINE -U-

AUTHOR-(04)-KALCHAYEV, K.K., KOROBEYNIKOVA, M.P., NASYROV, G.A., KHAMIDULINA, V.G.

COUNTRY OF INFO--USSR

SOURCE--PAZDEL IV. POLYARNYYE SIYANIYA I SVECHENIYE NOCHNOGO NEBA, 1970, NR 18, PP 15-17

DATE PUBLISHED--------70

SUBJECT AREAS--PHYSICS, ATMOSPHERIC SCIENCES

TOPIC TAGS--OXYGEN, SPECTRAL LINE, EMISSION SPECTRUM, RADIATION SPECTRUM, RADIATION INTENSITY

CONTROL MARKING--NO RESTRICTIONS

DOCUMENT CLASS--UNCLASSIFIED

PROXY REEL/FRAME--1994/0055 STEP NO--UR/3307/70/000/018/0015/0017

CIRC ACCESSION NO--AP0114451

UNCLASSIFIED

APPROVED FOR RELEASE: 08/09/2001 CIA-RDP86-00513R002201310003-9"

"APPROVED FOR RELEASE: 08/09/2001 CIA-RDP86-00513R002201310003-9

UNCLASSIFIED PROCESSING DATE--02OCT70

2/2 023

CIRC ACCESSION NO--AP0114451

ABSTRACT/EXTRACT--(U) GP-0- ABSTRACT. ACCORDING TO THE OBSERVATIONS CARRIED OUT IN ASHKHABAD THE ENTIRE SKY WAS SCANNED IN EMISSION AT 5577 ANGSTROM WITHIN TWO OR THREE MINUTES. THE ANALYSIS OF ISOPHOTES TAKEN AS A FILM REVEALS THE EXISTENCE OF SPOTS WHOSE SIZE VARIES IN A RAPID PULSATING MANNER.

UNCLASSIFIED

APPROVED FOR RELEASE: 08/09/2001 CIA-RDP86-00513R002201310003-9"

"APPROVED FOR RELEASE: 08/09/2001 CIA-RDP86-00513R002201310003-9

1/2 017 UNCLASSIFIED PROCESSING DATE--02OCT70

TITLE--INTENSITY VARIATIONS AND DYNAMICAL CHARACTERISTICS OF THE SPATIAL PATCHES OF THE EMISSION LAMBDA 5577 ANGSTROM -U-

AUTHOR-(03)-KOROBEYNIKOVA, M.P., NASYROV, G.A., KHAMIDULINA, V.G.

K

COUNTRY OF INFO--USSR

SOURCE--RAZDEL IV, POLYARNYYE SIYANIYA, I SVECHENIYE NOCHNOGO NEBA, 1970, NR 18, PP 5-14

DATE PUBLISHED--------70

SUBJECT AREAS--ASTRONOMY,ASTROPHYSICS, ATMOSPHERIC SCIENCES

TOPIC TAGS--DIURNAL VARIATION, OXYGEN, LINE INTENSITY, SEASONAL VARIATION, MOON

CONTROL MARKING--NO RESTRICTIONS

DOCUMENT CLASS--UNCLASSIFIED

PROXY REEL/FRAME--1994/0115 STEP NO--UR/3307/70/000/018/0005/0014

CIRC ACCESSION NO--AP0114511

UNCLASSIFIED

APPROVED FOR RELEASE: 08/09/2001 CIA-RDP86-00513R002201310003-9"

"APPROVED FOR RELEASE: 08/09/2001 CIA-RDP86-00513R002201310003-9

2/2 017 UNCLASSIFIED PROCESSING DATE--02OCT70

CIRC ACCESSION NO--AP0114511

ABSTRACT/EXTRACT--(U) GP-0- ABSTRACT. ACCORDING TO THE OBSERVATIONS CARRIED OUT IN ASHKHABAD IT IS CHARACTERISTIC OF THE DAILY VARIATIONS IN THE INTENSITY OF GREEN OXYGEN LINE THAT THE MAXIMUM INTENSITY OCCURS AT 2 OR 3 A.M. FOLLOWED BY AN APPRECIABLE DROP BY 5 A.M. THE FREQUENCIES OF APPEARANCE OF LOGARITHM OF INTENSITY LAMBDA 5577 ANGSTROM AND THE CUBE ROOT OF THE INTENSITY ARE DISTRIBUTED IN A NORMAL WAY. THE INTENSITY IS SUBJECT TO SEASONAL VARIATIONS WITH TWO MAXIMUM VALUES IN JUNE AND OCTOBER, AND WITH A MINIMUM VALUE IN JANUARY. THE VARIATIONS IN INTENSITY LAMBDA 5577 ANGSTROM HAVE BEEN FOUND TO BE AFFECTED BY THE MOON. THE TIME OF THE MAXIMUM VALUE AFTER THE LUNAR MIDNIGHT CORRESPONDS TO 4 PRIMEK 10 PRIMEN, THE AMPLITUDE BEING 35 RAYLEIGHS. AN AVERAGE SIZE OF HETEROGENEITIES LAMBDA 5577 ANGSTROM WHICH ARE WITHIN THE PHOTOMETRE FIELD OF VISION, IS 100 KM. THE MAXIMUM SIZE BEING 500 KM, AND THE MINIMUM ONE 30 KM. AN AVERAGE SIZE OF HETEORGENEITY BEYOND THE PHOTOMETRE FIELD OF VISION IS 1000 KM.

UNCLASSIFIED

APPROVED FOR RELEASE: 08/09/2001 CIA-RDP86-00513R002201310003-9"

"APPROVED FOR RELEASE: 08/09/2001 CIA-RDP86-00513R002201310003-9

USSR UDC 577.1:615.7/9

ARETINSKIY, B. V., YASTREBOV, A. P., KHAMIDULLIN, A. F., and SYRNEV, V. A.

"Changes in Protein Synthesis and Bioenergetics in Rat Lung Tissue After Exposure to a Combination of Quartz Dust and Diesel Exhaust Gases"

Tr. Tsentr. n.-i. proyekt.-konstrukt. in-ta profilakt. pnevmonokoniozov i tekhn. bezopasn. (Works of the Central Research and Design Institute for the Preven of Pneumoconiosis and Accidents), 1971, No 5, pp 117-122 (from RZh-Biologicheskaya Khimiya, No 24, Dec 72, Abstract No 24 F2270)

Translation: Exposure of rats treated with quartz dust to diesel exhaust gases for 1 month resulted in slight stimulation of the energy processes in lung and liver mitochondria and preservation of the normal level of incorporation of 1-C^{14}-glycine into the proteins of these tissues. Exposure to the gases for 3 months markedly reduced both the intensity of the energy processes in the mitochondria and the incorporation of glycine into the proteins of liver and lung tissues.

1/1

APPROVED FOR RELEASE: 08/09/2001 CIA-RDP86-00513R002201310003-9"

"APPROVED FOR RELEASE: 08/09/2001 CIA-RDP86-00513R002201310003-9

USSR UDC: 621.455

ALEMASOV, V. Ye., DREGALIN, A. F., KHAMIDULLIN, A. Z.

"Determining the Parameters of the Non-Isobaric Combustion Chamber of a Liquid Propellant Engine from the Data of Thermodynamic Calculation when Pressure is Constant"

Kazan', Izvestiya VUZov, Aviatsionnaya Tekhnika, No 2, 1970, pp 39-41

Abstract: For calculating the parameters of a nonisobaric cylindrical combustion chamber in a liquid propellant engine an approximate method is proposed which uses tables of thermodynamic characteristics for an isobaric engine. A comparison of the results of strict computation by a previously proposed method developed by the authors with the results of computation by the approximate method proposed in this paper showed that the approximate method is entirely suitable for engineering calculations. The authors thank G. B. Nudel'man for making the comparative calculations.

1/1

APPROVED FOR RELEASE: 08/09/2001 CIA-RDP86-00513R002201310003-9"

"APPROVED FOR RELEASE: 08/09/2001 CIA-RDP86-00513R002201310003-9

USSR UDC 621.395.3

KHAMITOV, G. P.

"Controlled Generator of a Generalized Telegraph Signal"

USSR Author's Certificate No 276153, filed 19 Mar 68, published 9 Oct 70 (from RZh--Elektrosvyaz', No 4, April 1971, Abstract No 4.64.374P)

Translation: A controlled generator of a generalized telegraph signal is patented, which contains a shaping circuit, an amplifier, and a group of several independent and identical pulse generators. With the object of simplifying the device with a simultaneous expansion of the area of application, there is introduced into it a circuit for feedback of the amplifier output with the control inputs of the pulse generators, the outputs of which are connected across the unit for unification of the pulse streams to the shaper of the generalized telegraph signal, the input of which provides the output of the device.

1/1

APPROVED FOR RELEASE: 08/09/2001 CIA-RDP86-00513R002201310003-9"

"APPROVED FOR RELEASE: 08/09/2001 CIA-RDP86-00513R002201310003-9

USSR UDC 519.281

POPOV, Ye. I., KHAMITOV, G. P.

"The Problem of Modeling of Random Functions"

Tr. Irkutsk. Politekhn. In-ta. [Works of Irkutsk Polytechnical Institute], No 56, 1970, pp 24-40 (Translated from Referativnyy Zhurnal Kibernetika, No 3, 1971, Abstract No 3 V128 by Yu. Pollyak).

Translation: Modeling of a stable random process x(t) with near-Gaussian distribution and correlation function

$$K(p) = \sum_{r=1}^{n} K_r(p), \tag{1}$$

$$K_r(p) = A_r e^{-ra|p|} \cos rbp. \tag{2}$$

(A_r, a, b are constants) is reduced to modeling of independent processes $x_r(t)$ with correlation functions $K_r(p)$, r = 1, 2, ..., n, and calculation of

$$x(t) = \sum_{r=1}^{n} x_r(t).$$

1/3

APPROVED FOR RELEASE: 08/09/2001 CIA-RDP86-00513R002201310003-9"

"APPROVED FOR RELEASE: 08/09/2001 CIA-RDP86-00513R002201310003-9

USSR UDC 519.281

POPOV, Ye. I., KHAMITOV, G. P., Tr. Irkutsk. Politekhn. In-ta., No 56, 1970, pp 24-40

Methods of approximation of correlation functions such as (1) are studied. Modeling of values x_i of process $x(t)$ with fixed one dimensional (not Gaussian) distribution and correlation functions such as (2) is reduced to modeling of a sequence of independent random quantities $\{x_i'\}$ with fixed distribution and ordering of $\{x_i'\}$ according to the following rule. Assume

$$z_j = x'_{j+1},\ j = 1, 2, \ldots, n.$$

$$x_1 = x'_1,\ x_2 = z_k, \text{ where } |x_1 - z_k| = \min_{1 \leq j \leq n} |x_1 - z_j|;\ z_k = x'_{n+2};$$

. . . . . .

$$x_l = z_k, \text{ где } |x_{l-1} - z_k| = \min_{1 \leq j \leq n} |x_{l-1} - z_j|;\ z_k = x'_{n+l};$$

2/3 - 18 -

APPROVED FOR RELEASE: 08/09/2001 CIA-RDP86-00513R002201310003-9"

"APPROVED FOR RELEASE: 08/09/2001 CIA-RDP86-00513R002201310003-9

USSR UDC 159.281

POPOV, Ye. I., KAMITOV, G. P., Tr. Irkutsk. Politekhn. In-ta., No 56, 1970, pp 24-40

The period of attenuating oscillations in (2) is determined by the parameter of the ordering system. A method is also described for ordering $\{x_i'\}$ leading to correlation function (2) where b = 0.

3/3

APPROVED FOR RELEASE: 08/09/2001 CIA-RDP86-00513R002201310003-9"

"APPROVED FOR RELEASE: 08/09/2001 CIA-RDP86-00513R002201310003-9

UDC 154.2+616.89.008.48

USSR

KHAMITOV, Kh. S. and KOTLYAREVSKIY, Ye. V., State Medical Institute im. S. V. Kurashov, Kazan'

"Physiological Changes in Man During Mental Stress"

Leningrad, Fiziologicheskiy Zhurnal SSR, No 3, 1973, pp 361-366

Abstract: Various cardiovascular and hemodynamic parameters were investigated in high school graduates before and during entrance examinations for medical school. The stress of competition markedly accelerated the pulse rate, elevated blood pressure, decreased the number of eosinophils in peripheral blood, increased blood 17-hydroxycorticosteroids, and raised ascorbic and pyruvic acid levels (ascorbid acid decreased while pyruvic acid continued to increase after the first examination). The magnitude of the changes varied considerably from individual to individual. The cardiovascular reactions were mostly hypertensive. A few students had an extrasystole or syncope after the first examination.

1/1

APPROVED FOR RELEASE: 08/09/2001 CIA-RDP86-00513R002201310003-9"

"APPROVED FOR RELEASE: 08/09/2001 CIA-RDP86-00513R002201310003-9

USSR UDC: 517.925

NUREKENOV, T. K. and KHAMITOV, M. Kh.

"Existence of ω-Periodic Solutions of Differential Equations"

Alma-Ata, Vestnik, Akademii Nauk Kazakhskoy SSR, No. 3(311), March 1971, pp 70-71

Translation: This paper considers the system of differential equations of the form:

$$dx/dt = f(t,x) \quad - \qquad (1)$$

where the function $f(t,x)$ is continuous over the combination of variables $t \in (-\infty, +\infty)$, $x = (x_1, \ldots, x_n) \in E^n$ and is ω-periodic over variable t.

It is assumed that the Cauchy problem

$$\begin{cases} dx/dt = f(t,x), \\ x(t_0) = x_0 \end{cases} \qquad (2)$$

has a unique solution $x(t) = p(t, t_0, x_0)$ in the interval $t_0 \leq t < \infty$.

1/6

APPROVED FOR RELEASE: 08/09/2001 CIA-RDP86-00513R002201310003-9"

"APPROVED FOR RELEASE: 08/09/2001 CIA-RDP86-00513R002201310003-9

USSR

NUREKENOV, T. K., et al, Vestnik, Akademii Nauk Kazakhskoy SSR, No 3(311), March 1971, pp 70-71

It is known [M. A. Krasnosel'skiy, "Operator for Displacement along Trajectories of Differential Equations", Moscow, 1966] that under these conditions there exists a shift operator $U(\omega, o)$ along the trajectories of system (1), the immovable point of which determines the ω-periodic solution; conversely, the initial datum of the ω-periodic solution is the immovable point of the shift operator.

Hence, to prove the existence of an ω-periodic solution of the system (1), it is sufficient to find the immovable point of the operator $U(\omega, o)$. To find that point, we use the conical method. The closed set K for the n-dimensional vector of space E_n is said to be a cone if:

a) It follows from $x, y \in K$ that $\alpha x + \beta y \in K$, $\alpha, \beta \geqslant 0$;

b) It follows from $x \in K$ that $-x \overline{\in} K$.

2/6

APPROVED FOR RELEASE: 08/09/2001 CIA-RDP86-00513R002201310003-9"

"APPROVED FOR RELEASE: 08/09/2001 CIA-RDP86-00513R002201310003-9

USSR

NUREKENOV, T. K., et al, Vestnik, Akademii Nauk Kazakhskoy SSR, No. 3(311), March 1971, pp 70-71

In this paper, we are considering the cone

$$K = \{x : x_i \geqslant 0; \quad i = 1, \ldots, n\}.$$

The fundamental difficulty here is finding the sufficient conditions in the terms of the right-hand member of (1) which guarantee the existence of an immovable point of the shift operator.

Lemma. Let $U(t,0)$ be the shift operator of system (1). If the function $f(t,x)$ does not decay with respect to the outer diagonal variable i.e.,

$$f_i(t, x_1, \ldots, x_{i-1}, \bar{x}_i, x_{i+1}, \ldots, x_n) \leqslant f_i(t, y_1, \ldots, y_{i-1}, \bar{x}_i, y_{i+1}, \ldots, y_n)$$

for $x_j \leqslant y_j$, $j \neq 1$ then, from $x \leqslant y$, it follows that

$$U(t,0)x \leqslant U(t,0)y. \qquad (3)$$

APPROVED FOR RELEASE: 08/09/2001 CIA-RDP86-00513R002201310003-9"

"APPROVED FOR RELEASE: 08/09/2001 CIA-RDP86-00513R002201310003-9

USSR

NUREKENOV, T. K., et al, Vestnik, Akademii Nauk Kazakhskoy SSR, No. 3(311), March 1971, pp 70-71

Proof. If we take $x_0 \leqslant y_0$, while $x(t)$, $y(t)$ are solutions of (1) which satisfy the initial conditions $x(t_0) = x_0$, $y(t_0) = y_0$, and let $y(t) - x(t) = h(t)$, then

$$dh_i/dt = f_i(t,x(t)+h) - f_i(t,x(t)) = g_i(t,h),$$

where

$$g_i(t,h) = g_i(t,h_1,\ldots,h_{i-1},\ 0,\ h_{i+1},\ldots,h_n) \geqslant 0$$

for $h_j \geqslant 0$, $j = 1,\ldots,i-1,\ \ i+1,\ldots,n$.

$h(t_0) = y_0 - x_0 \in K$; hence, $h(t) \in K$ [M. A. Krasnosel'skiy, "Operator for Displacement along Trajectories of Differential Equations", Moscow, 1966]. From this it follows that $h(t) = y(t) - x(t)$ 0: i.e., the shift operator $U(t,0)$ is monotonic, which also had to be proved.

4/6

APPROVED FOR RELEASE: 08/09/2001 CIA-RDP86-00513R002201310003-9"

"APPROVED FOR RELEASE: 08/09/2001 CIA-RDP86-00513R002201310003-9

USSR

NUREKENOV, T. K., et al, Vestnik, Akademii Nauk Kazakhskoy SSR, No 3(311), March 1971, pp 70-71

Theorem. (We obtained this result in May, 1970.) Let:

1) All conditions of the lemma be fulfilled, and let the shift operator $U(\omega,0)$ of system (1) be positive.

2) The function $f(t,x) \leqslant Ax$ outside a sphere of radius R, where A is some constant matrix.

3) The shift operator $V(\omega,0)$ of the equation $dx/dt = Ax$ be positive and have an eigenvector x_0 in cone K (x_0 is a point inside K) with the eigenvalue λ_0, $0 < \lambda_0 \leqslant 1$.

Then, system (1) has at least one nonnegative ω-periodic solution.

Proof. Let us consider the ray tx_0, where $t \geqslant 0$. Because of the continuity, operator $U(\omega,0)$ invariantly remains a conic section $0 \leqslant x \leqslant y_0$, where $y_0 = t_0 x_0$, while $\|y_0\| \geqslant R$.

5/6

APPROVED FOR RELEASE: 08/09/2001 CIA-RDP86-00513R002201310003-9"

"APPROVED FOR RELEASE: 08/09/2001 CIA-RDP86-00513R002201310003-9

USSR

NUREKENOV, T. K., et al, Vestnik, Akademii Nauk Kazakhskoy SSR, No 3(311), March 1971, pp 70-71

Hence [M. A. Krasnosel'skiy, "Positive Solutions of Operator Equations", Moscow, 1962] shift operator $U(\omega, 0)$ has an immovable point z_0 in the section $0 \leq x \leq y_0$; i.e.,

$$U(\omega, 0) z_0 = z_0.$$

Obviously, z_0, as the initial datum, determines the ω-periodic solution.

The theorem is fully proved.

6/6

APPROVED FOR RELEASE: 08/09/2001 CIA-RDP86-00513R002201310003-9"

"APPROVED FOR RELEASE: 08/09/2001 CIA-RDP86-00513R002201310003-9

USSR

UDC 615.616.24-003.656.6

KHAMITOVA, V. Z., KNYSH, V. S.

"Problem of Pneumoconiosogenic Properties of Different Dust Samples from Superphosphate Production"

Tr. NII krayev. patol. KazSSR (Works of the Scientific Research Institute of Marginal Pathology of the Kazakh SSR), 1972, No 23, pp 93-95 (from RZh--Farmakologiya. Khimioterapevticheskiye Sredstva. Toksikologiya, No 3, Mar 73, Abstract No 3.54.897)

Translation: For 12 months, rats were administered intratracheally 50 mg of simple superphosphate dust suspension containing 25 percent U_2O_5, 40 percent CaO, 2 percent Al_2O_3 and Fe_2O_3, 2 percent F and 5-19 percent SiO_2 (first group), granulated superphosphate of almost the same composition (second group) and ammophos containing an admixture of MH_3 (third group). In the animals in the first group after one to three months marginal pulmonary emphysema, desquamation and tearing away of the bronchial epithelium, constriction and sometimes obliteration of the vessels, and so on were detected. After 6-12 months, exudate appeared in the lumen of the bronchi and alveoli, connective tissue nodes and indurations

1/2

APPROVED FOR RELEASE: 08/09/2001 CIA-RDP86-00513R002201310003-9"

"APPROVED FOR RELEASE: 08/09/2001 CIA-RDP86-00513R002201310003-9

USSR

KHAMITOVA, V. Z., KNYSH, V. S., Tr. NII krayev. patol. KazSSR, 1972, No 23, pp 93-95

developed in the pulmonary parenchyma comprising lymphoid cells and collagenic fibers. In the animals of the second group, analogous, but more sharply expressed symptoms of the development of nodular-diffuse pneumoconiosis were noted. This process developed still more intensely in the animals of the third group. It is considered that the primary toxic effect is caused by the P_2O_5, F and NH_3.

2/2

APPROVED FOR RELEASE: 08/09/2001 CIA-RDP86-00513R002201310003-9"

"APPROVED FOR RELEASE: 08/09/2001 CIA-RDP86-00513R002201310003-9

USSR UDC 615.616.24-003.656.6

FEYGIN, B. G., KHAMITOVA, V. Z., ZIZANGIROVA, L. A.

"Problem of the Effect of Titanium Admixture in Quartz on the Development of Silicosis"

Tr. NII krayev. patol. KazSSR (Works of the Scientific Research Institute of Marginal Pathology of the Kazakh SSR), 1972, No 23, pp 147-151 (from RZh--Farmakologiya, Khimioterapevticheskiye Sredstva. Toksikologiya, No 3, Mar 73, Abstract No 3.54.893)

Translation: A dose of 0.5 mℓ of suspension containing 25 mℓ of Ti and 25 mg of quartz (first group) or 30 mg of quartz (second group) was administered daily intratracheally to male rats for 12 months. After one month, fine-focal inflammatory alterations of the interstitial type with round-celled and histocytic infiltration of the alveolar septa were observed in the lungs of the animals of the first group. After six months the inflammatory alterations in the lungs were accompanied by the development of large centers of cellular proliferation, nodular and perivascular cellular accumulations. After 9 and 12 months, attenuation of the inflammatory process was noted with normalization of the histologic picture

1/2

APPROVED FOR RELEASE: 08/09/2001 CIA-RDP86-00513R002201310003-9"

"APPROVED FOR RELEASE: 08/09/2001 CIA-RDP86-00513R002201310003-9

USSR

FEYCIN, B. G., et al., Tr. NII krayev. patol. KazSSR, 1972, No 23, pp 147-151

of the lungs. In the animals of the second group, the development of the typical silicosis picture was observed: infiltrative-proliferative part in the septum inter-alveolarium, then individual silicotic nodes of the lymphocytes, epithelial cells, compressed vessels and bronchi, then generalization of the process with partial deterioration of the lung tissue. It is considered that Ti does not intensify the silicosogenic properties of Si.

2/2

APPROVED FOR RELEASE: 08/09/2001 CIA-RDP86-00513R002201310003-9"

"APPROVED FOR RELEASE: 08/09/2001 CIA-RDP86-00513R002201310003-9

USSR UDC 615.616.24-003.656.6

KHAMITOVA, V. Z.

"Brief Characteristic of the Peculiarities of Mine Dust and the Disease Rate for Silicosis in Various Mines of Kazakhstan"

Tr. NII krayev. patol. KazSSSR (Works of the Scientific Research Institute of Marginal Pathology of the Kazakh SSR), 1972, No 23, pp 189-195 (from RZh--Farmakologiya. Khimioterapevticheskiye Sredstva. Toksikologiya, No 3, Mar 73, Abstract No 3.54.879)

Translation: As a result of many years of research, the conclusion has been drawn that the free SiO_2 content in the ore and dust is not the only cause for the occurrence of pneumoconiosis. The effect of toxic chemical additives promoting acceleration of the development of silicosis and alteration of the clinical-x-ray and pathomorphological picture also has great significance.

1/1

APPROVED FOR RELEASE: 08/09/2001 CIA-RDP86-00513R002201310003-9"

"APPROVED FOR RELEASE: 08/09/2001 CIA-RDP86-00513R002201310003-9

AA0040778

KHAMMATOV R.F.

UR 0482

Soviet Inventions Illustrated, Section I Chemical, Derwent, 1-70

240951 CASTINGS IMPREGNATOR comprises the tank (1) filled with the agent, a post (2) mounting an exchangeable insert (3) so as to leave a gap between it and wall of the casting (4). This casting is fixed to the flange (5) and can be handled (7) round the axis (6) down and locked onto the support (8) so as to keep the connection (10) above the fluid throughout. Fluid flows down into the casting cavity and then through the pores due to the arrival of compressed air from branch (10). The handle is reversed to release the now impregnated casting.

31.7.67 as 1176870/22-2. KHAMMATOV.R.F. & KURYATNIKOV. B.F. (20.8.69) Bul 13/1.4.69. Class 31b^2. Int.Cl.B22d.

.18

19750483

APPROVED FOR RELEASE: 08/09/2001 CIA-RDP86-00513R002201310003-9"

"APPROVED FOR RELEASE: 08/09/2001 CIA-RDP86-00513R002201310003-9

AA0040778

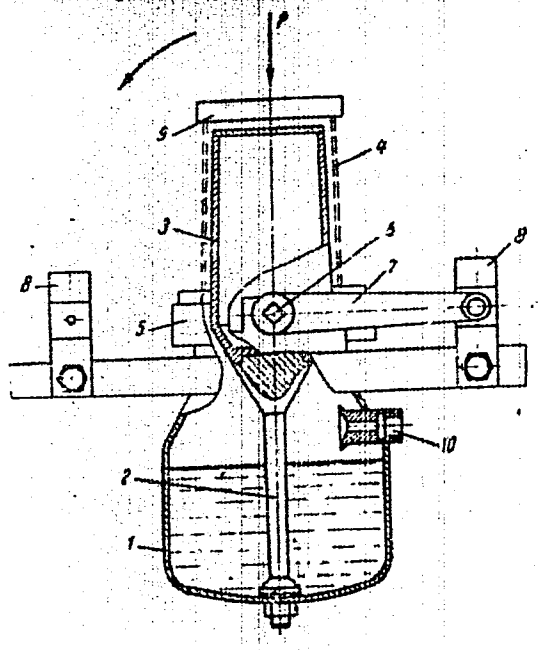

1/2

19750484

APPROVED FOR RELEASE: 08/09/2001 CIA-RDP86-00513R002201310003-9"

"APPROVED FOR RELEASE: 08/09/2001 CIA-RDP86-00513R002201310003-9

USSR UDC 547.241.07

RAZMOV, A. I., LIORBER, B. G., FOKOLOV, M. P., and KHAMMATOVA, V. M., Kazan Chemical Technological Institute imeni F. M. Kirova

"Process for the Preparation of Phosphorylated Thiosemicarbazones"

USSR Author's Certificate No 362022, filed 1 Mar 71, published 13 Dec 72 (from Otkrytiva, Izobreteniya, Promyshlennyye Obraztsy, Tovarnyye Znaki, No 2, 1973, p 54)

Translation: This process is improved in that the phosphorylated aldehydes react with the thiosemicarbazides in an organic solvent with a subsequent isolation of the desired product by a known method.

1/1

APPROVED FOR RELEASE: 08/09/2001 CIA-RDP86-00513R002201310003-9"

"APPROVED FOR RELEASE: 08/09/2001 CIA-RDP86-00513R002201310003-9

USSR UDC 547.241.422 + 541.571.6

LIORBER, B. G., SOKOLOV, M. P., KHAMMATOVA, Z. M., and RAZUMOV, A. I., Kazan' Chemical Technological Institute Imeni S. M. Kirov

"The Nature of the Hydrogen Bond in Phosphorylated Glycols"

Leningrad, Zhurnal Obshchey Khimii, Vol 43 (105), No 2, Feb 73, p 438

Abstract: Hydrogen bonding in a phosphorylated glycol -- methyl 2,3-dihydroxybutylmethylphosphinate -- was studied by IR spectroscopy. A single band at 3260 cm^{-1} was observed in a concentrated sample, two bands at 3270 and 3370 cm^{-1} at a 0.02 M concentration in CCl_4, C_2Cl_4, C_6H_6, corresponding to two intramolecular hydrogen bonds.

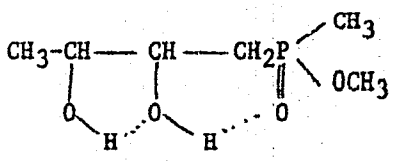

'A' 'B'

Diluting the glycol with a solvent of low polarity -- dioxane -- breaks the bond A, showing only one IR band at 3388 cm^{-1}.

1/1

APPROVED FOR RELEASE: 08/09/2001 CIA-RDP86-00513R002201310003-9"

"APPROVED FOR RELEASE: 08/09/2001 CIA-RDP86-00513R002201310003-9

USSR

UDC 547.341+542.955.1.2

LIORBER, B. G., KHAMMATOVA, Z. M., TARZIVOLOVA, T. A., RAZUMOV, A. I., Kazan' Chemical-Technological Institute imeni S. M. Kirov, Kazan, Ministry of Higher and Secondary Specialized Education RSFSR

"Studies of the Derivatives of Phosphinic and Phosphinous Acids. LXX. Esters of Epoxidized Phosphinic Acids"

Leningrad, Zhurnal Obshchey Khimii, Vol 40, No 8, Aug 70, pp 1699-1704

Abstract: Reaction of unsaturated phosphinic acid esters containing allyl type radicals with 65-80% peracetic acid gave a series of β, γ-epoxyphosphinic acids. The structures of the products obtained were determined by IR and NMR spectra. The epoxides could be opened by aqueous HCl, yielding β, γ-dihydroxybutylmethylphosphinic acid esters. The reaction occurred smoothly, probably because of the inductive effect of the methyl group, which counteracted the influence of the P:O group. The epoxides were tested for chemosterilant activity against the common house fly: the monoepoxides were found inactive and the diepoxides showed sterilizing activity.

1/1

APPROVED FOR RELEASE: 08/09/2001 CIA-RDP86-00513R002201310003-9"

"APPROVED FOR RELEASE: 08/09/2001 CIA-RDP86-00513R002201310003-9

1

USSR UDC 552.1:552.321

BORUKHOV, M. Yu., KEYTLIN, L. G., KATSOYEVA, F. N., LIKHODYDOV, G. G., KHAMRABAYEV, I. Kh.

"Behavior of Rock During Heating in a Vacuum (Part II. Phase Composition and Physical-Mechanical Properties)"

Uzbekskiy Geologicheskiy Zhurnal, No 6, 1971, pp 16-22.

ABSTRACT: The influence of vacuum treatment on the composition of the crystallizing phases of three petrographic types of basic and ultrabasic rocks was studied using nine samples from Western Uzbekistan and Kanchatka. The possibility was established in principle of using the method of crystallization "from the bottom" for satisfactory identification of the crystalline phases formed. It was demonstrated that vacuum heat treatment has a significant influence on the composition of the crystallizing phases. The results of the work performed indicate a method for production of high-quality structural material. Apparently, optimal modes of production of crystalline structures and glasses can be found for each type of mineral raw material, considering changes in the material occurring during heat treatment in a vacuum. High iron and titanium contents of the initial raw material provide high light-protection characteristics of cast products.

1/1

APPROVED FOR RELEASE: 08/09/2001 CIA-RDP86-00513R002201310003-9"

"APPROVED FOR RELEASE: 08/09/2001 CIA-RDP86-00513R002201310003-9

1/2 020 UNCLASSIFIED PROCESSING DATE--20NOV70

TITLE--TITANIUM, III, CHLORIDE AS A REDUCING AGENT DURING THE PHOTOMETRIC DETERMINATION OF PHOSPHORUS AS MOLYBDOPHOSPHATE -U-

AUTHOR-(03)-SUDAKOV, F.P., GALANKINA, N.F., KHAMRAKULOVA, M.I.

COUNTRY OF INFO--USSR

SOURCE--ZH. ANAL. KHIM. 1970, 25(3), 548-52

DATE PUBLISHED--------70

SUBJECT AREAS--CHEMISTRY

TOPIC TAGS--TITANIUM CHLORIDE, PHOTOMETRIC ANALYSIS, PHOSPHATE, MOLYBDENUM COMPOUND

CONTROL MARKING--NO RESTRICTIONS

DOCUMENT CLASS--UNCLASSIFIED

PROXY REEL/FRAME--3001/0463 STEP NO--UR/0075/70/025/003/0548/0552

CIRC ACCESSION NO--AP0126215

UNCLASSIFIED

APPROVED FOR RELEASE: 08/09/2001 CIA-RDP86-00513R002201310003-9"

"APPROVED FOR RELEASE: 08/09/2001 CIA-RDP86-00513R002201310003-9

UNCLASSIFIED PROCESSING DATE--20NOV70

2/2 020

CIRC ACCESSION NO--AP0126215

ABSTRACT/EXTRACT--(U) GP-0- ABSTRACT. 12,MOLYBDOPHOSPHATE CAN BE REDUCED IN AN ACID MEDIUM BY TICL SUB3. THE EFFECT OF VARIOUS FACTORS (CONCN. OF REACTING SUBSTANCES, ACIDITY, TEMP., TIME) WAS STUDIED. OPTIMUM CONDITIONS FOR THE REDN. ARE: BOILING FOR 10 MIN, ACIDITY OF 1.5-3.0N HCL OR 1.5-2.0N H SUB2 SO SUB4, 9.6 TIMES 10 PRIME NEGATIVE2 M MOLYBDATE CONCN., AND GREATER THAN OR EQUAL TO 7 TIMES 10 PRIME NEGATIVE3 M TICL SUB3 CONCN. A DIAGRAM OF MOLYBDOPHOSPHATE STABILITY WAS CONSTRUCTED, WHICH SHOWS THE JOINT EFFECT OF THESE FACTORS AND THE OPTIMUM ACIDITY OF THE SOLN. AT A GIVEN MOLYBDATE CONCN. AND VICE VERSA. TO DET. SMALL AMTS. OF P, TO A SOLN. CONTG. SIMILAR TO 0.025 MG P-ML, ADD 4.33 ML HCL, 8 ML 0.4M NA MOLYBDATE AND 8 ML 0.2087M TICL SUB3, BOIL FOR 10 MIN ON A WATER BATH, COOL, DIL. TO 25 ML WITH H SUB2 O, AND DET. P PHOTOMETRICALLY AT 810 NM. THE MOLAR ABSORPTIVITY AT 810 NM IS 2.9 TIMES 10 PRIME4. FACILITY: MOSCOW STATE UNIV., MOSCOW, USSR.

UNCLASSIFIED

APPROVED FOR RELEASE: 08/09/2001 CIA-RDP86-00513R002201310003-9"

"APPROVED FOR RELEASE: 08/09/2001 CIA-RDP86-00513R002201310003-9

USSR

MIKHAYLOVA, M. P., NASLEDOV, D. N., SLOBODCHIKOV, S. V., KHAMROKULOV, M., Physicotechnical Institute imeni A. F. Ioffe, Academy of Sciences of the USSR

"Heating of Electrons by Light in n-InAs"

Leningrad, Fizika Tverdogo Tela, Vol 15, No 2, Feb 73, pp 390-394

Abstract: The photomagnetic effect and photoconductivity are investigated in degenerate specimens of n-InAs with free carrier concentration of $2 \cdot 10^{16}$-$8 \cdot 10^{17}$ cm^{-3} in the temperature range of 5-77°K. Evaluations are made of the characteristic times of relaxation of electrons with respect to energy, and the role of the principal mechanisms of energy loss by the heated carriers is analyzed in different temperature intervals. It is shown that the behavior of the photomagnetic effect and photoconductivity in degenerate n-InAs at low temperatures can be satisfactorily explained by the theory of photoelectric effects for the case of electron heating by light under conditions of strong electron-electron interaction. In conclusion, the authors thank I. N. Yassiyevich for her constructive criticism.

1/1

APPROVED FOR RELEASE: 08/09/2001 CIA-RDP86-00513R002201310003-9"

"APPROVED FOR RELEASE: 08/09/2001 CIA-RDP86-00513R002201310003-9

1/2 010 UNCLASSIFIED PROCESSING DATE--27NOV70

TITLE--EFFECT OF INORGANIC ADDITIVES ON THE RATE OF BARIUM NITRATE CRYSTALLIZATION FROM AQUEOUS SOLUTIONS. III -U-

AUTHOR-(02)-POOOZERSKAYA, YE.A., KHAMSKIY, YE.V.

COUNTRY OF INFO--USSR

SOURCE--ZH. PRIKL. KHIM (LENINGRAD) 1970, 43(4), 736-42

DATE PUBLISHED--------70

SUBJECT AREAS--CHEMISTRY

TOPIC TAGS--BARIUM COMPOUND, NITRATE, CRYSTALLIZATION, AQUEOUS SOLUTION

CONTROL MARKING--NO RESTRICTIONS

DOCUMENT CLASS--UNCLASSIFIED

PROXY REEL/FRAME--3001/0428 STEP NO--UR/0080/70/043/004/0736/0746

CIRC ACCESSION NO--AP0126181

UNCLASSIFIED

APPROVED FOR RELEASE: 08/09/2001 CIA-RDP86-00513R002201310003-9"

"APPROVED FOR RELEASE: 08/09/2001 CIA-RDP86-00513R002201310003-9

2/2 010 UNCLASSIFIED PROCESSING DATE--27NOV70

CIRC ACCESSION NO--AP0126181

ABSTRACT/EXTRACT--(U) GP-0- ABSTRACT. RATES OF BA(NO SUB3) SUB2 CRYSTN. FROM AQ. SOLNS. CONTG. 0.5-20PERCENT NI(NO SUB3) SUB2 OR 0.1-22PERCENT OF FE(NO SUB3) SUB3 (WITH 0-0.78PERCENT HNO SUB3) OR 0.1-2PERCENT OF LINO SUB3 WERE MEASURED AT 0-30DEGREES FOR VARIOUS CONCNS. OF BA(NO SUB3) SUB2. THE ADDN. OF A SALT WITH A COMMON ANION INCREASES THE RATE OF CRYSTN. PRESUMABLY, THE BEGINNING OF CRYSTN. IS DELAYED DUE TO THE CHEMISORPTION OF ADDITIVES ON THE FACES OF CRYSTAL NUCLEI.

UNCLASSIFIED

APPROVED FOR RELEASE: 08/09/2001 CIA-RDP86-00513R002201310003-9"

"APPROVED FOR RELEASE: 08/09/2001 CIA-RDP86-00513R002201310003-9

1-/

USSR

BRODER, D. L., GAMALIY, A. F., ZEMTSEV, B. V., NESTEROV, B. V., and KHAM'YANOV, L. P. (Institute of Physics and Power Engineering)

"Gamma Radiation Upon Capture of Thermal Neutrons by Isotopes of Cr"

Moscow, Yadernaya Fizika, Vol 13, No 2, 1971, pp 233-239

Abstract: This work is devoted to the study of the spectra of gamma radiation arising upon capture of thermal neutrons by Cr isotopes, by means of a Ge-Li gamma spectrometer. The isotopes of chromium studied are Cr^{50}, Cr^{52}, and Cr^{53}. The yield of gamma lines per 100 captures of neutrons in each isotope are determined. Diagrams of the energy levels of Cr^{51}, Cr^{53}, and Cr^{54} nuclei are presented. The results are compared with the data of other authors. In general the data agree well with the data of recent works concerning the energy of individual gamma lines, but not as well concerning their yield. A number of new gamma lines are observed, particularly for Cr^{50} and Cr^{52}.

APPROVED FOR RELEASE: 08/09/2001 CIA-RDP86-00513R002201310003-9"

"APPROVED FOR RELEASE: 08/09/2001 CIA-RDP86-00513R002201310003-9

1/2 027 UNCLASSIFIED PROCESSING DATE--23OCT70

TITLE--STUDY OF THE TERNARY DIAGRAM COPPER, IRON, TITANIUM -U-

AUTHOR-(03)-KHAN, M.G., ZAKHAROV, A.M., ZAKHAROV, M.V.

COUNTRY OF INFO--USSR

SOURCE--ISVETNAIA METALLURGIIA, VOL. 13 NO 1 1970 P 104-109

DATE PUBLISHED-------70

SUBJECT AREAS--MATERIALS

TOPIC TAGS--COPPER ALLOY, IRON ALLOY, TITANIUM ALLOY, BIBLIOGRAPHY, THERMAL ANALYSIS, INTERMETALLIC COMPOUND, ELECTRIC RESISTANCE, SOLUBILITY, TERNARY ALLOY, CARBON

CONTROL MARKING--NO RESTRICTIONS

DOCUMENT CLASS--UNCLASSIFIED

PROXY REEL/FRAME--1998/0444 STEP NO--UR/0149/70/013/001/0104/0109

CIRC ACCESSION NO--AP0121118

UNCLASSIFIED

APPROVED FOR RELEASE: 08/09/2001 CIA-RDP86-00513R002201310003-9"

"APPROVED FOR RELEASE: 08/09/2001 CIA-RDP86-00513R002201310003-9

2/2 027 UNCLASSIFIED PROCESSING DATE--23OCT70

CIRC ACCESSION NO--AP0121118

ABSTRACT/EXTRACT--(U) GP-0- ABSTRACT. STUDY OF THE TERNARY SYSTEM CU-FE-TI CONTAINING TO 5PERCENT FE AND TO 5PERCENT TI, USING MICROSCOPIC, X RAY, AND THERMAL ANALYSES, MEASUREMENTS OF MICROHARDNESS AND ELECTRICAL RESISTIVITY, AND MAGNETOMETRY. ISOTHERMAL SECTIONS OF THIS SYSTEM ARE CONSTRUCTED FOR 650, 850, AND 900DEGC; THE QUASI BINARY SYSTEM CU-TIFE2 IS ALSO STUDIED. THE SOLVUS LINE OF THE INTERMETALLIC COMPOUND IN COPPER IS DETERMINED. IT IS FOUND THAT THE MAXIMUM SOLUBILITY OF TIFE2 IN COPPER AT 1095DEG C IS ABOUT 2PERCENT AND DECREASES TO 0.4PERCENT AT 650DEGC. FACILITY: MOSKOVSKII INSTITUT STALI I SPLAVOV, MOSCOW, USSR.

UNCLASSIFIED

APPROVED FOR RELEASE: 08/09/2001 CIA-RDP86-00513R002201310003-9"

"APPROVED FOR RELEASE: 08/09/2001 CIA-RDP86-00513R002201310003-9

1/2 021 UNCLASSIFIED PROCESSING DATE--02OCT70

TITLE--PILOT PLANT TESTING OF VIBRATING MIXERS IN CADMIUM PLANT TECHNOLOGY -U-

AUTHOR-(05)-KHAN, O.A., GUSHCHIN, YU.A., PIKOV, N.KH., AYDAROV, R.ZH., AYDAROVA, P.I.

COUNTRY OF INFO--USSR

R

SOURCE--TSVET. METAL. 1970, 43(1) 19-21

DATE PUBLISHED--------70

SUBJECT AREAS--MECH., IND., CIVIL AND MARINE ENGR, MATERIALS

TOPIC TAGS--MATERIAL MIXING, VIBRATION EFFECT, CADMIUM, COPPER, ZINC

CONTROL MARKING--NO RESTRICTIONS

DOCUMENT CLASS--UNCLASSIFIED

PROXY REEL/FRAME--1989/0751 STEP NO--UR/0136/70/043/001/0019/0021

CIRC ACCESSION NO--AP0107293

UNCLASSIFIED

APPROVED FOR RELEASE: 08/09/2001 CIA-RDP86-00513R002201310003-9"

"APPROVED FOR RELEASE: 08/09/2001 CIA-RDP86-00513R002201310003-9

2/2 021 UNCLASSIFIED PROCESSING DATE--02OCT70

CIRC ACCESSION NO--AP0107293

ABSTRACT/EXTRACT--(U) GP-0- ABSTRACT. THE MIXER USED IS DESCRBIED. THE RESULITS ARE PRESENTED OF PILOT PLANT TESTING OF VIBRATING MIXERS IN DISSOLN. OF CD AS WELL AS OF CU CONTG. INDUSTRIAL PRODUCTS; ALSO PRESENTED ARE THE RESULTS OF CEMENTATION OF CD AND CU IN SOLNS. BY ZN DUST UNDER CD PLANT TECHNOLOGY CONDITIONS. THE DATA OBTAINED WERE SUBMITTED AS THE BASIC DATA ON WHICH TO BASE THE DEVELOPMENT AND CONSTRUCTION OF EXPTL. INDUSTRIAL VIBRATING MIXERS (VIBROAGITATORS) WITH CAPACITIES OF 10-15 M PRIME3.

UNCLASSIFIED

APPROVED FOR RELEASE: 08/09/2001 CIA-RDP86-00513R002201310003-9"

"APPROVED FOR RELEASE: 08/09/2001 CIA-RDP86-00513R002201310003-9

USSR UDC 669.1:548.0:538

SHUR, YA. S., ZAYKOVA, V. A. and KHAN, YE. B., Institute of Metal Physics, Academy of Sciences USSR

"Domain Structure in Single Crystals of Silicon Iron in a Variable Magnetic Field"

Sverdlovsk, Fizika Metallov i Metallovedeniye, Vol 29, No 4, Apr 70, pp 770-776

Abstract: A study was made to investigate the behavior of the domain structure in a variable magnetic field in relation to the induction amplitude. Samples were strips of silicon iron (3%,Si) measuring 50 x 5 x 0.3 mm whose surfaces were close to the (011) crystal plane. Silicon iron was used because there is a more complete change in the domain structure in quasistatic fields, which significantly simplified the study. The surfaces of the samples were mechanically polished and vacuum annealed at 1100°C for two hours.

Observations of the single crystals showed that domain structure behavior in variable fields depends on the magnitude of magnetic induction (B_{max}). At B_{max} = 50 Hz, six domains were observed. The width of the domains remained fairly constant until a B_{max} of 11,500 Hz was induced. At B_{max} = 12,800 Hz the number of domains increased to eight, and at 15,000 there were nine domains. The new domains formed along the edge of the surfaces, parallel to the [100] axis. Upon approaching the saturation point the domain structure again changed, so that at B_{max} =

1/2

APPROVED FOR RELEASE: 08/09/2001 CIA-RDP86-00513R002201310003-9"

"APPROVED FOR RELEASE: 08/09/2001 CIA-RDP86-00513R002201310003-9

USSR

SHUR, YA. S., et al., Fizika Metallov i Metallovedeniye, Vol 29, No 4, Apr 70, pp 770-776

17,000 Hz only three domains were noted.

According to the authors, magnetic (polarity) reversal in a dynamic mode differs substantially from magnetic reversal in the quasi-static mode and, in relation to the magnitude of B_{max}, can proceed by three methods. At small values of B_{max}, one observes a fluctuation of 180° domain boundaries near their equilibrium position (Method I). At higher values of B_{max}, along with the boundary fluctuations, the number of domains increases (Method II). At the saturation point there is a shifting of domain boundaries from the side surfaces to the center (Method III).

2/2

APPROVED FOR RELEASE: 08/09/2001 CIA-RDP86-00513R002201310003-9"

"APPROVED FOR RELEASE: 08/09/2001 CIA-RDP86-00513R002201310003-9

USSR UDC: 548.12:538.69

KHANAGOV, A. A.

"Determination of Orientation Symmetry of Water Molecules from Nuclear Magnetic Resonance Spectra in Fibrous Structures"

Moscow, Kristallografiya, Vol. 15, No. 4, 1970, pp 732-735

Abstract: The author develops a method for analyzing the spectra of nuclear magnetic resonance for determining the orientation symmetry of water molecules in collagen, used as the example of a fibrous structure. As was shown in an earlier paper by the same author (Biofizika, 5, 1969, p 796), the anisotropic broadening in these spectra from protons of the water in the collagen is caused by averaged local fields as the result of intense diffusion of the water molecules over the regular nodes, to each of which corresponds a definite molecular orientation in relation to the collagen structure. It is also shown that the assumption of the reorientation mechanism of local field averaging made in a previous paper (H. J. C. Berendsen, Thesis, Univ. Groningen, 1962) is contrary to

APPROVED FOR RELEASE: 08/09/2001 CIA-RDP86-00513R002201310003-9"