"APPROVED FOR RELEASE: 08/09/2001 CIA-RDP86-00513R002201510008-2

1/2 015 UNCLASSIFIED PROCESSING DATE--23OCT70

TITLE--PREPARING HARDENED THIN FILMS FROM THERMOSETTING POLYMERS -U-

AUTHOR-(04)-GARANINA, S.D., GROMOVA, M.V., KOROLEV, A.YA., ZHERDEY, YU.V.

COUNTRY OF INFO--USSR

SOURCE--PLAST. MASSY 1970, (3), 61

DATE PUBLISHED--------70

SUBJECT AREAS--MATERIALS

TOPIC TAGS--THERMOSETTING MATERIAL, PLASTIC FILM, FLUOROCARBON RESIN, EPOXY RESIN, POLYESTER RESIN, PLASTIC FABRICATION/(U)FLUOROPLASTY FLUORINE PLASTIC

CONTROL MARKING--NO RESTRICTIONS

DOCUMENT CLASS--UNCLASSIFIED

PROXY REEL/FRAME--1997/0581 STEP NO--UR/0191/70/000/003/0061/0061

CIRC ACCESSION NO--AP0119499

UNCLASSIFIED

APPROVED FOR RELEASE: 08/09/2001 CIA-RDP86-00513R002201510008-2"

"APPROVED FOR RELEASE: 08/09/2001 CIA-RDP86-00513R002201510008-2

2/2 015 UNCLASSIFIED PROCESSING DATE--23OCT70

CIRC ACCESSION NO--AP0119499

ABSTRACT/EXTRACT--(U) GP-0- ABSTRACT. THIN FILMS FROM THERMOSETTING POLYMERS (I) WERE PREPD. BY PRESSING I SAMPELS IN A COLLAPSIBLE FTOROPLAST-4 CONTAINER. THE METHOD WAS SUITABLE FOR I WHICH DID NTO LIBERATE LARGE AMTS. OF VOLATILE COMPOS. DURING HARDENING (E.G., EPOXY RESINS, POLYESTERS, AND OTHERS).

UNCLASSIFIED

APPROVED FOR RELEASE: 08/09/2001 CIA-RDP86-00513R002201510008-2"

"APPROVED FOR RELEASE: 08/09/2001 CIA-RDP86-00513R002201510008-2

1/2 024 UNCLASSIFIED PROCESSING DATE--20NOV70

TITLE--INFRARED SPECTROSCOPIC STUDY OF THE CHEMISORPTION OF ORGANOSILICON COMPOUNDS ON AN AEROSIL SURFACE -U-

AUTHOR-(05)-BRCUN, E.V., KUROLEV, A.YA., VINOGRADOVA, L.M., ARTAMONOVA, R.V., MEAKOVA, T.V.

COUNTRY OF INFO--USSR

SOURCE--ZH. FIZ. KHIM. 1970, 44(3), 797-9

DATE PUBLISHED--------70

SUBJECT AREAS--CHEMISTRY

TOPIC TAGS--IR SPECTRUM, CHEMISORPTION, ORGANOSILICON COMPOUND, SILICA, ORGANIC SILANE, CARBONYL COMPOUND

CONTROL MARKING--NO RESTRICTIONS

DOCUMENT CLASS--UNCLASSIFIED

PROXY REEL/FRAME--3002/1197 STEP NO--UR/0076/70/044/003/0797/0799

CIRC ACCESSION NO--AP0128615

UNCLASSIFIED

APPROVED FOR RELEASE: 08/09/2001 CIA-RDP86-00513R002201510008-2"

"APPROVED FOR RELEASE: 08/09/2001 CIA-RDP86-00513R002201510008-2

2/2 024 UNCLASSIFIED PROCESSING DATE--20NOV70

CIRC ACCESSION NO--AP0128615

ABSTRACT/EXTRACT--(U) GP-0- ABSTRACT. THE INTERACTION OF TRIMETHYLETHOXYSILANE (I), TRIMETHYLACETOXYSILANE (II), AND TRIMETHYLCHLOROSILANE (III) WITH AEROSIL OF SP. SURFACE 150 M PRIME2 PER G WAS STUDIED. THE SURFACE COMPD. OF TRIMETHYLSILANE GROUPS WAS FOUND, AND ITS CONCN. DEPENDENCE ON TEMP. AND TIME WAS STUDIED. I AND III GAVE A HIGH DEGREE OF SURFACE OCCUPATION AT ROOM TEMP., WHILE II PROVIDED A SUFFICIENTLY OCCUPIED MONOLAYER ONLY AT SIMILAR TO 300DEGREES. TREATING OF II ON AN AEROSIL SURFACE CAUSED THE FORMATION OF A SMALL AMT. OF CARBONYL COMPDS.

UNCLASSIFIED

APPROVED FOR RELEASE: 08/09/2001 CIA-RDP86-00513R002201510008-2"

"APPROVED FOR RELEASE: 08/09/2001 CIA-RDP86-00513R002201510008-2

1/2 033 UNCLASSIFIED PROCESSING DATE--27NOV70

TITLE--CHANGE IN THE PROCESS OF REPOLARIZATION OF THE MYOCARDIUM IN HEALTHY PERSONS DURING LIMITATION OF MOTOR ACTIVITY -U-

AUTHOR--KOROLEV, B.A.

K

COUNTRY OF INFO--USSR

SOURCE--VOYENNO-MEDITSINSKIY ZHURNAL, 1970, NR 3, P 122

DATE PUBLISHED-------70

SUBJECT AREAS--BIOLOGICAL AND MEDICAL SCIENCES

TOPIC TAGS--MYOCARDIUM, ELECTROCARDIOGRAPHY, HYPODYNAMIA, AIRCRAFT PILOT, METABOLISM

CONTROL MARKING--NO RESTRICTIONS

DOCUMENT CLASS--UNCLASSIFIED

PROXY REEL/FRAME--3007/0379 STEP NO--UR/0177/70/000/003/0122/0122

CIRC ACCESSION NO--AP0135866

UNCLASSIFIED

APPROVED FOR RELEASE: 08/09/2001 CIA-RDP86-00513R002201510008-2"

"APPROVED FOR RELEASE: 08/09/2001 CIA-RDP86-00513R002201510008-2

2/2 033 UNCLASSIFIED PROCESSING DATE--27NOV70

CIRC ACCESSION NO--AP0135866

ABSTRACT/EXTRACT--(U) GP-0- ABSTRACT. SIGNS OF DISTURBANCES OF THE PROCESS OF REPOLARIZATION OF THE MYOCARDIUM ON THE ECG ARE: SYNDROME TV SUB1 GREATER THAN TV SUB6, AND APPEARANCE OF INCREASE OF THE U WAVE AMPLITUDE. DISTURBANCE OF THE PROCESS OF REPOLARIZATION CAN ALSO BE JUDGED BY VARIATIONS OF THE RATIO OF THE WAVE AMPLITUDE U AND T, THE LENGTH OF THE SEGMENTS AT AU AND S AU, AND THERATIO RR-S AU. AS THE U WAVE IS MOST OFTEN EXPRESSED IN THE V SUB3 LEAD, IN THAT LEAD WE INVESTIGATED THE AMPLITUDES OF THE U AND T WAVES, THE RATIO U-T AND RR-S AU OF THE SEGMENT AT AU AND S AU. ATTENTION WAS TURNED TO THE PRESENCE OF THE TV SUB1 GREATER THAN TV SUB6 SYNDROME. WE INVESTIGATED A GROUP OF PERSONS OF THE FLIGHT PERSONNEL (24 MEN) WHO HAD COMPLETED LONG FLIGHTS. ELECTROCARDIOGRAMS WERE RECORDED BEFORE AND AFTER THE FLIGHTS. IN 10 HEALTHY MEN (CONTROL GROUP) AGED FROM 20 TO 25 THE PROCESS OF REPOLARIZATION WAS STUDIED UNDER CONDITIONS OF LONG HYPODYNAMIA WITH THE USE OF A HYPOXIC TEST. AS A RESULT OF LIMITATION OF MOBILITY BOTH UNDER THE CONDITIONS OF LONG FLIGHT AND IN ARTIFICIALLY CREATED HYPODYNAMIA, WE NOTED CHANGES OF THE PROCESS OF REPOLARIZATION OF THE MYOCARDIUM WHICH TESTIFY TO CHANGES OF METABOLISM IN THE MYOCARDIUM.

UNCLASSIFIED

APPROVED FOR RELEASE: 08/09/2001 CIA-RDP86-00513R002201510008-2"

"APPROVED FOR RELEASE: 08/09/2001 CIA-RDP86-00513R002201510008-2

USSR UDC 547.785.5

KABACHNIK, M. I., Academician, TIKHONINA, N. A., KOROLEV, B. A., GILYAROV, V. A., Institute of Organoelemental Compounds, Academy of Sciences of the USSR; All-Union Scientific Research Institute of Organic Intermediate Products and Dyes, Moscow

"2-Phosphabenzoxazoles -- a New Type of Cyclic Imidophosphoric Compounds"

Moscow, Doklady Akademii Nauk SSSR, Vol 204, No 6, 21 Jun 72, pp 1352-1355

Abstract: The authors study the basicity of aromatic (or pseudoaromatic) rings containing the P=N bond but without strongly electronegative substituents associated with the nitrogen atom. The 2-phosphabenzoxazole system is selected as a representative, being a cyclic analog of phenoxy N-phenylimidophosphorans, and a phosphorus analog of benzoaxazole. The yields, constants and results of analyses of the 2-phosphabenzoaxazoles are given together with the methods of synthesis developed by the authors. An investigation of some of the properties of these compounds shows that a sharp reduction in basicity of the P=N bond can be attributed to closure of a five-member ring which might possibly be aromatic in nature.

1/1

APPROVED FOR RELEASE: 08/09/2001 CIA-RDP86-00513R002201510008-2"

"APPROVED FOR RELEASE: 08/09/2001 CIA-RDP86-00513R002201510008-2

UDC 547.26'418

USSR

GENKINA, G. K., KOROLEV, B. A., GILYAROV, V. A. and KABACHNIK, M. I., Institute of Metalloorganic Compounds, Academy of Sciences USSR, and All-Union Scientific Research Institute of Organic Intermediates and Dyes

"Basicity of Some Phosphorus Acid Imides"

Leningrad, Zhurnal Obshchey Khimii, Vol 41, No 1, Jan 71, pp 80-84

Abstract: The authors determined the basicity of a series of phosphorus acid imides of the type XYZP' = NC_6H_4R (R = H, p-F; X, Y, Z = Alk, AlkO, Ar, NR_2) by potentiometric titration in nitromethane with perchloric acid and studied the effect of substituents at the phosphorus atom on the strength of these substances as bases. The pK_a values of the investigated phosphorus acid imides show that they are all strong bases (pK_a from 13.4 to 19.7). The values depend on the nature of the substituents X, Y and Z, they obey the Hammett equation, using the constants $\sigma\phi$ of the groups X, Y, Z.

1/1

APPROVED FOR RELEASE: 08/09/2001 CIA-RDP86-00513R002201510008-2"

"APPROVED FOR RELEASE: 08/09/2001 CIA-RDP86-00513R002201510008-2

USSR

UDC 547.241:541.45

KOVTUN, V. Yu., GILYAROV, V. A., KOROLEV, B. A., MATROSOV, Ye. I., and KABACHNIK, M. I., Institute of Organometallic Compounds, Acad. Sc. USSR and Scientific Research Institute of Intermediates and Dyes

"Basicity and Nucleophilicity of Some Methylenediphosphinediimines"

Leningrad, Zhurnal Obshchey Khimii, Vol 41 (103), No 4, Apr 71, pp 772-778

Abstract: A series of substituted tetraphenylmethylenediphosphinedi-(N-phenylimines) was obtained from tetraphenylmethylenediphosphine by treatment with two moles of substituted phenylazides and converted to nonomethiodides by refluxing them in benzene in presence of methyl iodide. Equimolar quantities of tetraphenylmethylenediphosphine react with benzyl or p-nitrobenzyl bromide in benzene to give the corresponding benzylphosphonium salts which upon reaction with phenylazides yielded diphenylbenzyl(or p-nitrobenzyl) [diphenyl(N-phenylimino)phosphinylmethyl(or phosphonylmethyl)]phosphonium bromides. The pK_a values were determined in nitromethane for all the compounds obtained. It was determined that the basicity of the nitrogen atom in these compounds depends on the nature of substituents in the phenyl ring bound to the imine nitrogen atom. Hammet's equation applies to these compounds.

1/1

APPROVED FOR RELEASE: 08/09/2001 CIA-RDP86-00513R002201510008-2"

"APPROVED FOR RELEASE: 08/09/2001 CIA-RDP86-00513R002201510008-2

USSR

UDC 541.623 661.718.1

KABACHNIK, M. I., GILYAROV, V. A., KOROLEV, B. A., and RAYEVSKAYA, T. A., Institute of Organo-Elemental Compounds, Moscow, Academy of Sciences USSR, and Scientific Research Institute for Organic Semi-Products and Dyes, Moscow, State Committee for Chemistry

"Tautomerism of P,P-Diethyl-N,N'-diarylphosphamidines"

Moscow, Izvestiya Akademii Nauk SSSR, Seriya Khimicheskaya, Vol 4, Apr 70, pp 772-780

Abstract: This study is concerned with quantitative investigation of tautomeric relationship of phosphamidines in a nitromethane solution. The phosphamidines were obtained by reacting diethylchlorophosphine with substituted anilines in the presence of triethylamine, yielding P,P-diethylanilidophosphinites, which when reacted with substituted phenylazides in benzene at 50-60° gave various phosphamidines. The basicity constants were determined for these compounds in nitromethane solution at 25 ± 0.3° by potentiometric titration; all were found to be strong bases in nitromethane solution. Tautomeric equilibrium constants were determined by three methods: "method of inter-

1/2

APPROVED FOR RELEASE: 08/09/2001 CIA-RDP86-00513R002201510008-2"

"APPROVED FOR RELEASE: 08/09/2001 CIA-RDP86-00513R002201510008-2

USSR

KABACHNIK, M. I., et al, Izvestiya Akademii Nauk SSSR, Seriya Khimicheskaya, Vol 4, Apr 70, pp 772-780

secting lines" and by two methods of comparison of effective basicity of tautomeric compounds with that of corresponding methylated derivatives. All methods gave similar results. Donor substituents shift the equilibrium towards the form in which the proton would be fixed close to the donor substituent, while the opposite occurs with the acceptor substituents.

2/2

APPROVED FOR RELEASE: 08/09/2001 CIA-RDP86-00513R002201510008-2"

"APPROVED FOR RELEASE: 08/09/2001 CIA-RDP86-00513R002201510008-2

1/3 019 UNCLASSIFIED PROCESSING DATE--27NOV70

TITLE--TAUTOMERISM OF P,P DIETHYL N,N PRIME DIARYLPHOSPHAMIDINES -U-

AUTHOR-(04)-KABACHNIK, M.I., GILYAROV, V.A., KOROLEV, B.A., RAEVSKAYA, T.A.

COUNTRY OF INFO--USSR

SOURCE--IZV. AKAD. NAUK SSSR, SER. KHIM. 1970 (4), 772-80

DATE PUBLISHED--------70

SUBJECT AREAS--CHEMISTRY

TOPIC TAGS--TAUTOMERISM, ANILINE, TRIETHYLAMINE, ORGANIC PHOSPHORUS COMPOUND, AMINE DERIVATIVE, POTENTIOMETRIC TITRATION, CHEMICAL SYNTHESIS

CONTROL MARKING--NO RESTRICTIONS

DOCUMENT CLASS--UNCLASSIFIED

PROXY REEL/FRAME--3006/1431 STEP NO--UR/0052/70/000/004/0772/0780

CIRC ACCESSION NO--AP0135103

UNCLASSIFIED

APPROVED FOR RELEASE: 08/09/2001 CIA-RDP86-00513R002201510008-2"

"APPROVED FOR RELEASE: 08/09/2001 CIA-RDP86-00513R002201510008-2

019

CIRC ACCESSION NO--AP0135103 UNCLASSIFIED PROCESSING DATE--27NOV70

ABSTRACT/EXTRACT--(U) GP-0- ABSTRACT. ADDING 15.5 G ET SUB2 PCL TO 11.6 G PHNH SUB2 AND 13.86 G ET SUB3 N IN ET SUB2 O, AND KEEPING THE MIXT. OVERNIGHT GAVE 54PERCENT ET SUB2 PNHPH (I), B SUB0.1 70-10DEGREES, N PRIME20 SUB0 1.5628, D PRIME20 0.9979; SIMILARLY WERE PREPD. THE P ANISIDIDE, 32PERCENT, B SUB0.1 114-15DEGREES, 1.5619, 1.0494; AND P TOLUIDIDE, B SUB0.02 73-4DEGREES, 1.5573, 0.9718. I AND P AZIDOBENZO TRIFLUORIDE MIXED SLOWLY AT 50-60DEGREES IN PETROLEUM ETHER AND THE MIXT. HEATED 0.5 HR AT 50-60DEGREES GAVE ET SUB2 PI?NC SUB6 H SUB4 X)NHC SUB6 H SUB4 Y (X EQUALS P CF SUB3, Y EQUALS H), M. 156.5-57DEGREES. SIMILARLY WERE PREPD. THE ANALOGS (X AND Y SHOWN): P ME SUB2 N, H, M. 148-9DEGREES; P MEO, H, M. 148-8DEGREES; P F, H, M. 160-1DEGREES; M F, H, M. 153-4DEGREES; P CL, H, M. 147-8DEGREES; M NO SUB2, H, M. 116-17DEGREES; P NO SUB2, H, M. 131-2DEGREES; P CN, H, M. 131-2DEGREES; M F, P MEO, M. 112-13DEGREES; M CL, P ME, M. 134-5DEGREES; P CL, P MEO, M. 165-6DEGREES; P NO SUB2, P MEO, M. 143-4DEGREES; P CL, P ME, M. 163-3.5DEGREES; M F, P ME, M. 126-7DEGREES; P CF SUB3, P ME, M. 153-4DEGREES; M NO SUB2, P ME, M. 131-2DEGREES; AND P NO SUB2, P ME, M. 119-21DEGREES. FROM POTENTIOMETRIC TITRN. DATA OF THESE AMIDINES WITH HCLO SUB4 IN MENO SUB2 THE CONCENTRATIONAL DISSOCN. CONSTS. OF THESE WERE CALCD. AND TABULATED AS PKA VALUES. FROM THESE BY THE METHOD OF INTERSECTING STRAIGHT LINES (K., ET AL., 1962) IT WAS POSSIBLE TO EST. THE TAUTOMERISM AMONG THESE AMIDINES. THE EQUIL. CONSTS. OF THE AMIDINES FOLLOW THE HAMMETT EQUATION AND CAN BE CALCD. FROM PK SUBT EQUALS 0.03 PLUS 1.793 SIGMA X WHERE SIGMA X IS THE SUBSTITUENT CONST.

UNCLASSIFIED

APPROVED FOR RELEASE: 08/09/2001 CIA-RDP86-00513R002201510008-2"

"APPROVED FOR RELEASE: 08/09/2001 CIA-RDP86-00513R002201510008-2

3/3 019 UNCLASSIFIED PROCESSING DATE--27NOV70

CIRC ACCESSION NO--AP0135103

ABSTRACT/EXTRACT--THE BASICITIES OF THE AMIDINES WERE GENERALLY LOWER THAN THOSE OF METHYLATED DERIVS., OWING TO THE INDUCTIVE EFFECT OF THE ME GROUP IN THE LATTER. THE TAUTOMERIC EQUIL. CONSTS. FOR THE ABOVE AMIDINES WERE TABULATED ALONG WITH PKA VALUES. FACILITY: INST. ELEMENTOORG. SOEDIN. MOSCOW, USSR.

UNCLASSIFIED

APPROVED FOR RELEASE: 08/09/2001 CIA-RDP86-00513R002201510008-2"

"APPROVED FOR RELEASE: 08/09/2001 CIA-RDP86-00513R002201510008-2

1/2 · 012 UNCLASSIFIED PROCESSING DATE--11SEP70

TITLE--OKEAN REPORTS FROM THE OCEANS -U-

AUTHOR--KOROLEV, D.

K.

COUNTRY OF INFO--USSR

SOURCE--KRASNAYA ZVEZDA, APRIL 25, 1970, P 2, COLS 4-5

DATE PUBLISHED--25APR70

SUBJECT AREAS--MECH., IND., CIVIL AND MARINE ENGR, ORDNANCE

TOPIC TAGS--ROCKET FIRING, MOTOR TORPEDO BOAT, SHIP

CONTROL MARKING--NO RESTRICTIONS

DOCUMENT CLASS--UNCLASSIFIED

PROXY REEL/FRAME--1987/1914 STEP NO--UR/9008/70/000/000/0002/0002

CIRC ACCESSION NO--AN0104988

UNCLASSIFIED

APPROVED FOR RELEASE: 08/09/2001 CIA-RDP86-00513R002201510008-2"

"APPROVED FOR RELEASE: 08/09/2001 CIA-RDP86-00513R002201510008-2

2/2 012 UNCLASSIFIED PROCESSING DATE--11SEP70

CIRC ACCESSION NO--AN0104988

ABSTRACT/EXTRACT--(U) GP-0- ABSTRACT. THE LARGE ASW SHIP "OBRAZTSOVYY" PARTICIPATED IN ROCKET FIRING UPON AN AIRBORNE TARGET. THIS WAS THE FIRST INDEPENDENT FIRING FOR THE COMMANDER OF THE ROCKET ARTILLERY SECTION, SENIOR LIEUTENANT N. BELOUSOV. A PHOTOGRAPH SHOWS TWO TORPEDO BOATS OF THE BLACK SEA FLEET UNDER POWER.

UNCLASSIFIED

APPROVED FOR RELEASE: 08/09/2001 CIA-RDP86-00513R002201510008-2"

"APPROVED FOR RELEASE: 08/09/2001 CIA-RDP86-00513R002201510008-2

AN0040342

K

UR9008

AUTHOR-- KOROLEV, D., CAPTAIN 2ND RANK, SPECIAL CORRESPONDENT

TITLE-- STORM SEAS ARE AHEAD

NEWSPAPER-- KRASNAYA ZVEZDA, APRIL 14, 1970, P 3, COLS 1-4

ABSTRACT-- THE "OBRAZTSOVYY", AN ANTISUBMARINE SHIP, AND THE CRUISER "MURMANSK" ARE SAID TO BE PARTICIPATING IN THE "OKEAN" WAR GAMES. A PHOTOGRAPH IS GIVEN SHOWING PART OF THE FORE GUN TURRET OF THE "MURMANSK".

X

4

19741777

APPROVED FOR RELEASE: 08/09/2001 CIA-RDP86-00513R002201510008-2"

"APPROVED FOR RELEASE: 08/09/2001 CIA-RDP86-00513R002201510008-2

JPRS 57787

Izvestia Metallurgy

18 Dec. 72

Steel + Alloys

KOROLEV, E. A.

KINETICS OF THERMAL DECOMPOSITION OF TITANIUM TETRACHLORIDE

[Article by V. V. Krapukhin, E. A. Korolev, Moscow Institute of Steel and Alloys. Department of Physical Chemistry and Technology of Semiconductors and Superpure Metals; Ordzhonikidze, Izvestiya VUZ, Tsvetnaya Metallurgiya, Russian, No 4, 1972, signed to press 15 June 1972, pp 53-58]

The mechanism of the initial stage of thermal decomposition of $TiCl_4$ is investigated with the aid of the adiabatic compression method. The device used for adiabatic compression and expansion and the experimental conditions are described. The mechanism consists of detachment of a chlorine atom.

The thermal decomposition of $TiCl_4$ begins at a temperature of the order of 2,000°K [1]. Analysis of chemical reactions at such high temperatures poses enormous difficulties in terms of the mechanical set-up of the process and the development of isothermal conditions. At high temperatures reaction rates may be so high that the excesses during heating or cooling will be commensurate with the excess at the steady-state temperature.

The procedure of analyzing the kinetics of chemical reactions that take place under nonisothermal conditions anticipates the need to determine the temperature as a function of time [2]. This dependence can be determined rather easily in systems of adiabatic compression or expansion or in shock tubes.

The adiabatic compression method [3] was used in this work to investigate the mechanism of the initial stage of thermal decomposition of $TiCl_4$. An electrode arc plasma apparatus was employed for analysis of the kinetics of the formation of $TiCl_2$. The adiabatic compression method, as precise as the shock wave method, made it possible to achieve heating and cooling rates of the order of 10^6 deg/sec, at the same time limiting the reagent contact time at high temperatures to 10^{-5} sec.

APPROVED FOR RELEASE: 08/09/2001 CIA-RDP86-00513R002201510008-2"

"APPROVED FOR RELEASE: 08/09/2001 CIA-RDP86-00513R002201510008-2

USSR UDC 669.295.978.460.533.9

KRAPUKHIN, V. V., KOROLEV, E. A.

"Kinetics of Thermal Decomposition of Titanium Tetrachloride"

Ordzhonikidze, Izvestiya Vysshikh Uchebnykh Zavedeniy, Tsvetnaya Metallurgiya, No 4, 1972, pp 53-58.

Abstract: The mechanism of the initial stage of thermal decomposition of $TiCl_4$ is studied by the method of adiabatic compression. The kinetics of the formation of $TiCl_2$ were studied using an electric-arc plasma installation. The method of adiabatic compression, equal to the shockwave method in accuracy, allows heating and cooling rates on the order of 10^8 deg/sec to be achieved, limiting the contact time of the reagents at high temperatures to 10^{-5} sec. The kinetics of the reaction of thermal decomposition of $TiCl_4$ were studied at 2,000-3,000°K. It is demonstrated that the mechanism of the initial stage of thermal dissociation of $TiCl_4$ is separation of a chlorine atom. The rate constant of the process of formation of $TiCl_3$ is determined. The electric-arc plasma installation is used to study the kinetics of the reaction of thermal decomposition of $TiCl_4$ at 3,000-4,000°K. A mechanism for the reaction of decomposition of $TiCl_4$ to $TiCl_2$ is suggested,

1/2

APPROVED FOR RELEASE: 08/09/2001 CIA-RDP86-00513R002201510008-2"

"APPROVED FOR RELEASE: 08/09/2001 CIA-RDP86-00513R002201510008-2

USSR UDC 669.295.978.464.533.0

KRAPUKHIN, V. V., KOROLEV, E. A., Ordzhonikidze, Isvestiya Vysshikh Uchebnykh Zavedeniy, Tsvetnaya Metallurgiya, No 4, 1972, pp 53-58.

consisting of successive separation of chlorine atoms. The reaction rate constant of the formation of $TiCl_2$ is determined.

2/2

APPROVED FOR RELEASE: 08/09/2001 CIA-RDP86-00513R002201510008-2"

"APPROVED FOR RELEASE: 08/09/2001 CIA-RDP86-00513R002201510008-2

USSR

KOROLEV, E. I.

"Automatic Recognition of Logical Predicates"

Mash. Per. i Prikl. Lingvist. [Machine Translation and Applied Linguistics -- Collection of Works], No 15, Moscow, 1972, pp 165-178 (Translated from Referativnyy Zhurnal Kibernetika, No 6, 1973, Abstract No 6V766, by the author).

Translation: A method is presented for recognition of a logical predicate in a statement during automatic analysis of the Russian text. The rules consider the order of terms in the sentence and their relationship with the preceding elements.

1/1

APPROVED FOR RELEASE: 08/09/2001 CIA-RDP86-00513R002201510008-2"

"APPROVED FOR RELEASE: 08/09/2001 CIA-RDP86-00513R002201510008-2

JPRS 59211

8 June 1973

UDC 523.43

PRELIMINARY RESULTS OF MEASURING THE H_2O CONTENT IN THE ATMOSPHERE OF MARS ON THE MARS-3 AUTOMATIC SPACE STATION

[Article by V.I. Moroz, A.P. Nadezhin, A.N. Ot'yarg, F.A. Korolev, V.G. Zhegulev, Moscow, Doklady Akademii Nauk SSSR, Russian, Vol 208, No 4, 1973, pp 797-800]

The IV-2 instrument designed to measure the water vapor content in the atmosphere of the planet was installed on the Mars-2 and Mars-3 automatic space stations (artificial Mars satellites). Such measurements have the following important advantages by comparison with ground observations [1-7]: 1) the measurements are taken with close spacing (1000-1500 km in the pericenter of the orbit) and the spatial resolution is about 5-10 km, two orders better than from the Earth; 2) all the difficulties connected with telluric absorption are completely removed, and smaller amounts of H_2O can be measured than from the Earth.

The IV-2 instrument (Fig. 1) measures the H_2O content in the atmosphere of Mars by the magnitude of the absorption at the center of the 1.38 μ band. The H_2O band of λ = 1.38 μ is formed in the spectrum of the reflected solar radiation, and its equivalent width does not in practice depend on the vertical temperature distribution in the atmosphere of the planet. This is the theoretical difference of the IV-2 from the Iris device used for the same purpose on the American Mariner-9 station [8]. The Iris records the rotational band of H_2O in the 25-30 μ region the intensity of which depends so strongly on the vertical temperature distribution that the band can be observed also in absorption and in emission [9].

Since the expected equivalent width of even the strongest lines at the center of the 1.38 μ band in the spectrum of Mars is small, the modulation method is used to measure it. The interference-polarization filter comprising a plate of Iceland spar (a double refracting crystal 5) and two polaroids (4,6) and the interference filter 3 separate three lines in the center of the band: 13,788, 13,807 and 13,827 Å. On rotation of the second polaroid 6 the transmission peaks of the interference-polarization filter

* [Article submitted by Academician G.I. Petrov on 28 June 1973.]

KOROLEV F.A.

APPROVED FOR RELEASE: 08/09/2001 CIA-RDP86-00513R002201510008-2"

"APPROVED FOR RELEASE: 08/09/2001 CIA-RDP86-00513R002201510008-2

1/2 049 UNCLASSIFIED PROCESSING DATE--30OCT70

TITLE--FINE STRUCTURE OF THE SUPERRADIATION SPECTRUM IN A PULSED NEON LASER -U-

AUTHOR-(04)-KOROLEV, F.A., ABROSIMOV, G.V., OOINTSOV, A.I., YAKUNIN, V.P.

COUNTRY OF INFO--USSR

SOURCE--OPTIKA I SPEKTROSKOPIIA, VOL. 28, MAR. 1970, P. 540-542

DATE PUBLISHED--------70

SUBJECT AREAS--PHYSICS

TOPIC TAGS--FINE STRUCTURE, NEON, LASER PULSE, GAS LASER, LASER RADIATION SPECTRUM, FABRY PEROT INTERFEROMETER, LINE SPLITTING, LASER PULSE LENGTH

CONTROL MARKING--NO RESTRICTIONS

DOCUMENT CLASS--UNCLASSIFIED

PROXY REEL/FRAME--1996/1508 STEP NO--UR/0051/70/028/000/0540/0542

CIRC ACCESSION NO--AP0118495

UNCLASSIFIED

APPROVED FOR RELEASE: 08/09/2001 CIA-RDP86-00513R002201510008-2"

"APPROVED FOR RELEASE: 08/09/2001 CIA-RDP86-00513R002201510008-2

2/2 049 UNCLASSIFIED PROCESSING DATE--30OCT70

CIRC ACCESSION NO--AP0118495

ABSTRACT/EXTRACT--(U) GP-0- ABSTRACT. STUDY OF THE SPECTRAL COMPOSITION OF THE SUPERRADIATION ON THREE LINES OF A PULSED NEON LASER WITH WAVELENGTHS OF 6143, 5944, AND 5401 A WITH THE AID OF A FABRY-PEROT INTERFEROMETER WITH A THICKNESS OF 10 AND 15 CM. THE SUPERRADIATION LINES ARE OBSERVED TO POSSESS A FINE STRUCTURE WHICH IN TYPICAL CASES CONTAINS FROM THREE TO SIX COMPONENTS WITH AN INTERVAL RANGING FROM 150 TO 400 HMZ BETWEEN NEIGHBORING COMPONENTS. THE WIDTH OF AN INDIVIDUAL COMPONENT RANGES FROM ABOUT 100 TO 200 MHZ, WHICH AGREES IN ORDER OF MAGNITUDE WITH THE SUPERRADIATION PULSE LENGTH (ABOUT 5 TO 8 NSEC). NO DEPENDENCE OF THE SPLITTING INTERVAL ON THE GEOMETRY OF THE DISCHARGE REGION, THE GAS PRESSURE, AND THE SIZE OF THE CHARGE CAPACITANCE IS FOUND. THE OBSERVED FINE STRUCTURE CANNOT BE ATTRIBUTED TO THE ISOTOPIC STRUCTUREOF NEON, SINCE THE NUMBER OF COMPONENTS AND THE DISTANCES BETWEEN THEM DO NOT CORRESPOND TO THE CHARACTERISTICS OF THE ISOTOPIC SHIFT IN NEON. IT IS SUGGESTED THAT THE COMPONENTS OF THE FINE STRUCTURE MAY BELONG TO SUPERRADIATIVE MODES OF THE PULSED LASER.

UNCLASSIFIED

APPROVED FOR RELEASE: 08/09/2001 CIA-RDP86-00513R002201510008-2"

"APPROVED FOR RELEASE: 08/09/2001 CIA-RDP86-00513R002201510008-2

1/2 031 UNCLASSIFIED PROCESSING DATE--16OCT70

TITLE--WIDE BAND REFLECTORS BASED ON MULTILAYER DIELECTRIC COATINGS -U-

AUTHOR-(04)-KOROLEV, F.A., KLEMENTEVA, A.YU., MESHCHERYAKA, T.F., RAMAZINA, I.A.

COUNTRY OF INFO--USSR

SOURCE--OPT. SPEKTROSK. 1970, 28(4), 775-80

DATE PUBLISHED--------70

SUBJECT AREAS--ELECTRONICS AND ELECTRICAL ENGR.

TOPIC TAGS--DIELECTRIC COATING, LIGHT REFLECTION, WIDEBAND TRANSMISSION

CONTROL MARKING--NO RESTRICTIONS

DOCUMENT CLASS--UNCLASSIFIED

PROXY REEL/FRAME--1998/0954 STEP NO--UR/0051/70/028/004/0775/0780

CIRC ACCESSION NO--AP0121556

UNCLASSIFIED

APPROVED FOR RELEASE: 08/09/2001 CIA-RDP86-00513R002201510008-2"

"APPROVED FOR RELEASE: 08/09/2001 CIA-RDP86-00513R002201510008-2

2/2 031 UNCLASSIFIED PROCESSING DATE--16OCT70

CIRC ACCESSION NO--AP0121556

ABSTRACT/EXTRACT--(U) GP-0- ABSTRACT. THE METHODS OF PREPN. OF VARIOUS WIDEBAND REFLECTORS AS WELL AS EXPTL. RESULTS IN THE VISIBLE AND UV SPECTRAL REGIONS ARE GIVEN.

UNCLASSIFIED

APPROVED FOR RELEASE: 08/09/2001 CIA-RDP86-00513R002201510008-2"

"APPROVED FOR RELEASE: 08/09/2001 CIA-RDP86-00513R002201510008-2

Lasers and Masers

USSR

UDC 621.373.029.67

KOROLEV, F. A., KURIN, A. F.

"Cyclotron Resonance Maser with Fabry-Pérot Resonator"

Moscow, Radiotekhnika i elektronika, No 10, 1970, pp 2143-2149

Abstract: The cyclotron resonance maser is defined as a maser in which electrons oscillating in a static magnetic field or crossed electric and magnetic fields form the active element. This paper gives the results of theoretical and experimental research into such a maser with a Fabry-Pérot resonator of the type used in laser technology, where the axis of the spiral electron beam coincides with the direction of the static magnetic field. The experimentation was conducted in the centimeter wavelength range. A diagram and an explanation of the experimental equipment are given, the asymmetrical electron gun producing the spiral beam being a plane diode placed in the magnetic field such that the uniform electric field in the gun is intersected by the magnetic field lines of force at some angle. The electron source is a heated cylindrical cathode six mm in diameter. The method and results of the experiments are given.

1/1

APPROVED FOR RELEASE: 08/09/2001 CIA-RDP86-00513R002201510008-2"

"APPROVED FOR RELEASE: 08/09/2001 CIA-RDP86-00513R002201510008-2

1/3 050 UNCLASSIFIED PROCESSING DATE--30OCT70

TITLE--EXCITATION OF STIMULATED RAMAN SPECTRA IN LIQUIDS DURING THE MODULATION OF LASER QUALITY BY THE SUBSTANCE BEING STUDIED -U-

AUTHOR-(04)-KORGLEV, F.A., BASKAKOVA, Z.A., ZAKHAROVA, T.S., GOINTSOV, V.I.

COUNTRY OF INFO--USSR

SOURCE--PIS'MA ZH. EKSP. TEOR. FIZ. 1970, 11(6), 295-7

DATE PUBLISHED--------70

SUBJECT AREAS--PHYSICS

TOPIC TAGS--RAMAN SPECTRUM, LIGHT SCATTERING, LASER MODULATION, RUBY LASER, BENZENE, CARBON TETRACHLORIDE, CYCLOHEXANE, LASER PULSE

CONTROL MARKING--NO RESTRICTIONS

DOCUMENT CLASS--UNCLASSIFIED

PROXY REEL/FRAME--3000/1170 STEP NO--UR/0386/70/011/006/0295/0297

CIRC ACCESSION NO--AP0124825

UNCLASSIFIED

APPROVED FOR RELEASE: 08/09/2001 CIA-RDP86-00513R002201510008-2"

"APPROVED FOR RELEASE: 08/09/2001 CIA-RDP86-00513R002201510008-2

2/3 050 UNCLASSIFIED PROCESSING DATE--30OCT70

CIRC ACCESSION NO--AP0124825

ABSTRACT/EXTRACT--(U) SP-0- ABSTRACT. ON THE BASIS OF REVERSE STIMULATED MANDELSTAM BRILLOUIN (MB) LIGHT SCATTERING, WHICH LEADS TO REFLECTION OF A CONSIDERABLE PART OF THE INCIDENT LIGHT OUTSIDE OF THE LASER, MODULATION OF LASER QUALITY WAS ACHIEVED. WITH AN EXPTL. EQUIPMENT COMPOSED OF A MIRROR, RUBY CRYSTAL (120 MM), FOCUSING LENSE, CELL 940 CM), AND SPECTROGRAPH, THE EFFECT OF BENZENE (I), CYCLOHEXANE (II), AND CCL SUB4 (III) WAS STUDIED. ENERGY OF A SINGLE PULSE INCIDENT ON THE SUBSTANCE WAS SIMILAR TO 1.5 J. FOR I AND II, SIMILAR TO 1.2 FOR III. HALF WIDTH OF THE PULSE DURATION WAS SIMILAR TO 25 NSEC FOR I AND II, SIMILAR TO 20 FOR III. SPECTRAL STUDIES SHOWED THE PRESENCE OF 4-5 COMPONENTS OF MB LIGHT SCATTERING, LINEWIDTH OF SINGLE COMPONENT WAS SIMILAR TO 10 PRIME NEGATIVE2 CM PRIME NEGATIVE1 (WHICH IS CONSIDERABLY LOWER IN COMPARISON WITH THE LINEWIDTH IN THE REGIME OF FREE GENERATION, 0.35 CM PRIME NEGATIVE1). IN I 4 STOKES EMISSION COMPONENTS WITH A SHIFT OF 992 CM PRIME NEGATIVE1 WERE EXCITED (THE POWER OF THE 2ND WAS HIGHER THAN 15 MW.). IN II 2 STOKES COMPONENTS WERE EXCITED CORRESPONDING TO THE MOL. VIBRATION 2852 CM PRIME NEGATIVE1 (THE MOST INTENSE COMPONENT IS SIMILAR TO 20 MW.), 2 COMPONENTS OF THE VIBRATION 801 CM PRIME NEGATIVE1, AND 2 COMBINATION STOKES FREQUENCIES WITH SHIFT (2852 PLUS 801) AND (2 TIMES 2852 PLUS 802) CM PRIME NEGATIVE1. IN III 4 STOKES COMPONENTS WITH SHIFT 459 CM PRIME NEGATIVE1 WERE EXCITED (THE 2ND WITH SIMILAR TO 10 MW.). HIGHER POWER OF THE EXCITING PULSE AND MORE EFFECTIVE EXCITATION OF THE RAMAN SPECTRA WERE FOUND THAN WITH EQUIPMENT USING A SATURABLE ABSORBER FOR THE MODULATION OF LASER QUALITY.

APPROVED FOR RELEASE: 08/09/2001 CIA-RDP86-00513R002201510008-2"

"APPROVED FOR RELEASE: 08/09/2001 CIA-RDP86-00513R002201510008-2

3/3 050 UNCLASSIFIED PROCESSING DATE--30OCT70

CIRC ACCESSION NO--AP0124825

ABSTRACT/EXTRACT--FACILITY: MOSK. GOS. UNIV. IM. LOMONOSOVA, MOSCOW, USSR.

UNCLASSIFIED

APPROVED FOR RELEASE: 08/09/2001 CIA-RDP86-00513R002201510008-2"

"APPROVED FOR RELEASE: 08/09/2001 CIA-RDP86-00513R002201510008-2

USSR

UDC 669 - 174'24

STEPANOVA, M. V., KOROLEV, F. V., ZOLOTUKHINA, A. M., FIGUROVSKAYA, T. A., BOROK, B. A., and SHCHEGOLEVA, R. P., Moscow Institute of Steel and Alloys of MZOTsM (Moscow Plant for the Processing of Non-Ferrous Metals), Central Scientific Research Institue of Ferrous Metallurgy

"The Effect of Alloying of Carbonyl Nickel on its Recrystallization"

Ordzhonikidze, Izvestiya Vysshikh Uchebnykh Zavedeniy, Tsvetnaya Metallurgiya, No 1, 1973, pp 150-152

Abstract: Carbonylnickel samples containing W, MgO, Al_2O_3, Zr, and ZrO_2 were cold-deformed with a terminal deformation of 70%. Recrystallization annealing was carried out at 160-800°C (20-degree intervals) with holding times at 30 min. The temperatures of the start and end of recrystallization I (t_r^s and t_r^e, respectively) were determined from the Vickers hardness as a function of annealing temperature, with an experimental error of ± 5°C. The t_r^s and t_r^e of carbonyl nickel without any addivities were 330 and 400°C, respectively. These figures were 660 and 750°C with addition of 0.15% Zr; 500 and 730°C with 0.15% ZrO_2; 540 and 720°C with 4% W; 360 and 510°C with 0.2% MgO; and 400 and 540°C with 0.2% Al_2O_3, respectively. It is evident that the t_r^s increased by 330

1/2

APPROVED FOR RELEASE: 08/09/2001 CIA-RDP86-00513R002201510008-2"

"APPROVED FOR RELEASE: 08/09/2001 CIA-RDP86-00513R002201510008-2

USSR

STEPANOVA, M. V., et al., Izvestiya Vysshikh Uchebnykh Zavedeniy, Tsvetnaya Metallurgiya, No 1, 1973, pp 150-152

and 210°C with the addition of Zr and W, respectively. This can be attributed to a slow formation of the recrystallization centers because of the interaction of dislocations with Zr and W atoms. Due to the fact that the t_r^d was increased from 400 to 750°C when 0.15% Zr was added to carbonyl nickel, it is recommended that the intermediate annealing temperature increased from 600 to 750-800°C.

2/2

APPROVED FOR RELEASE: 08/09/2001 CIA-RDP86-00513R002201510008-2"

"APPROVED FOR RELEASE: 08/09/2001 CIA-RDP86-00513R002201510008-2

USSR K UDC 539.144.6:539.1.083

KOMAR, A. P., Academician of the Academy of Sciences Ukrainian SSR, VOROB'YEV, A. A., ZALITE, YU. K., and KOROLEV, G. A., Physicotechnical Institute imeni A. F. Ioffe, Academy of Sciences USSR, Leningrad

"Lifetimes of Excited Nuclear States Occurring in Alpha-Decay of Ra-223 and Bi-211"

Moscow, Doklady Akademii Nauk SSSR, Vol 191, No 1, 1970, pp 61-63

Abstract: Existing methods for measuring the short lifetimes of excited states in the region of heavy alpha-active nuclei have a number of important limitations. The authors used a microwave method developed in their laboratory. The device consists of two time superhigh-frequency shutters -- for alpha particles and for conversion electrons e_c, a time-delay system between the shutters, and the measuring apparatus. The source, set on thin (5-micron) aluminum foil, is placed between modulating resonators. A double-focusing magnetic-sector beta spectrometer, with a pulse resolution of 0.75 percent, is tuned to the conversion line peak. When the superhigh-frequency modulation is switched on, the energy of e_c flying through the resonator gap changes

1/2

APPROVED FOR RELEASE: 08/09/2001 CIA-RDP86-00513R002201510008-2"

"APPROVED FOR RELEASE: 08/09/2001 CIA-RDP86-00513R002201510008-2

USSR

KOMAR, A. P., et al., Doklady Akademii Nauk SSSR, Vol 191, No 1, 1970, pp 61-63

according to the superhigh-frequency phase. As a result, the detector of the beta spectrometer records only those e_c which did not change their energy. The time shutter for the alpha particles is another resonator which simulates the energy of secondary-emission electrons formed by alpha particles during passage through the foil and accelerated in the gap between the foil and the resonator to $\sim$2 kev. As they pass through the resonator, the electrons are analyzed for energy with the aid of an electrostatic analyzer and an open-type electron multiplier. Chosen for the lifetime measurement were the level 269 kev of Rn-219, formed in alpha-decay of Ra-223, and the level 350 kev of Tl-207, formed in alpha-decay of Bi-211.

The authors thank B. V. GRIGOR'YEV, A. K. LEBEDEV, and V. A. SMIRNOV for their assistance in the work and A. I. YEGOROV and L. M. VASIL'YEVA for preparing the sources.

2/2

APPROVED FOR RELEASE: 08/09/2001 CIA-RDP86-00513R002201510008-2"

"APPROVED FOR RELEASE: 08/09/2001 CIA-RDP86-00513R002201510008-2

1/2 014 UNCLASSIFIED PROCESSING DATE--16OCT70

TITLE--LIFETIMES OF EXCITED NUCLEAR STATES ARISING DURING THE ALPHA DECAY OF RADIUM-223 AND BISMUTH-211 -U-

AUTHOR-(04)-KOMAR, A.P., VOROBYEV, A.A., ZALITE, YA., KOROLEV, G.A.

COUNTRY OF INFO--USSR

K

SOURCE--DOKL. AKAD. NAUK SSSR 1970, 191(1), 61-3

DATE PUBLISHED--------70

SUBJECT AREAS--PHYSICS, NUCLEAR SCIENCE AND TECHNOLOGY

TOPIC TAGS--NUCLEAR ENERGY LEVEL, EXCITED NUCLEUS, HALF LIFE, ALPHA DECAY, RADON, BISMUTH, NUCLEAR SPIN

CONTROL MARKING--NO RESTRICTIONS

DOCUMENT CLASS--UNCLASSIFIED

PROXY REEL/FRAME--1992/0948 STEP NO--UR/0020/70/191/001/0061/0063

CIRC ACCESSION NO--AT0112110

UNCLASSIFIED

APPROVED FOR RELEASE: 08/09/2001 CIA-RDP86-00513R002201510008-2"

"APPROVED FOR RELEASE: 08/09/2001 CIA-RDP86-00513R002201510008-2

2/2 014 UNCLASSIFIED PROCESSING DATE--16OCT70

CIRC ACCESSION NO--AT0112110

ABSTRACT/EXTRACT--(U) GP-0- ABSTRACT. BY USING A MICROWAVE METHOD, THE HALF LIFE OF THE EXCITED STATE OF THE 269 KEV LEVEL IN THE ALPHA DECAY OF PRIME223 RA TO PRIME219 RN WAS DETD. AS 27 PLUS OR MINUS 3 PSEC, AND THE MEAN HALF LIFE OF THE 350 KEV LEVEL IN PRIME211 BI TO PRIME207 TL AS 0.43 PLUS OR MINUS 0.1 PSEC. FOR PRIME207 TL, FIRST EXCITED AND GROUND STATE SPIN VALUES OF 3-2 PLUS AND 1-2 PLUS WERE ASSIGNED ANDIDENTIFIED AS 2D 3-2 AND 3S 1-2, RESP. FACILITY: FIZ.-TEKH. INST. IM. IOFFE, LENINGRAD, USSR.

UNCLASSIFIED

APPROVED FOR RELEASE: 08/09/2001 CIA-RDP86-00513R002201510008-2"

"APPROVED FOR RELEASE: 08/09/2001 CIA-RDP86-00513R002201510008-2

USSR UDC 681.333.001.57

KOROLEV, G. S.

"A Device for Modeling Problems of Heat or Mass Transfer"

Moscow, Otkrytiya, Izobreteniya, Promyshlennyye Obraztsy, Tovarnyye Znaki, No 12, 1970, Author's Certificate No 267199, filed 21 Sep 67, p 122

Abstract: This Author's Certificate introduces a device for modeling problems of heat or mass transfer. The unit contains a system of tubes with communicating vessels. As a distinguishing feature of the patent, the class of problems which can be solved is extended by incorporating a hermetically sealed housing with removable grid plates in the system of communicating vessels. These plates form the geometric contour of the problem under investigation. A dispersion fluid is poured into the sealed housing.

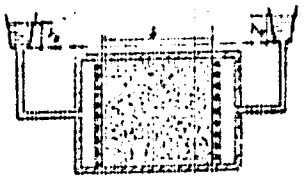

1/1

APPROVED FOR RELEASE: 08/09/2001 CIA-RDP86-00513R002201510008-2"

"APPROVED FOR RELEASE: 08/09/2001 CIA-RDP86-00513R002201510008-2

USSR UDC 621.382.3

KARAPETYAN, L.M., KOROLEV, G.V.

"Computation Of Some Parameters Of A Transistor In A Microregime"

Tr. NII gidrometeorol. priborstr. (Works Of The Scientific-Research Institute Of Hydrology Instrument Manufacture), 1970, Issue 23, pp 94-96 (from RZh--Elektronika i yeye primeneniye, No 1, January 1970, Abstract No 1B196)

Translation: In the paper a computation is performed for the differential resistance and diffusion capacitance of the emitter junction of a transistor in a microregime. Formulas for the above parameters are substantially simplified during notation with the aid of a coefficient depending on the emitter current. In the work, a formula for computation of this coefficient is developed and checked. 1 ill. 2 ref. Summary.

1/1

APPROVED FOR RELEASE: 08/09/2001 CIA-RDP86-00513R002201510008-2"

"APPROVED FOR RELEASE: 08/09/2001 CIA-RDP86-00513R002201510008-2

USSR

UDC: 536.2:536.63

MEBED, M. N., YURCHAK, R. P., KOROLEV, L. A., Moscow State University imeni M. V. Lomonosov

"Thermophysical Properties of Zirconium Carbide in the High Temperature Region"

Moscow, Teplofizika Vysokikh Temperatur, Vol 11, No 2, Mar/Apr 73, pp 427-429

Abstract: Experimental data are given on the temperature coefficient of thermal conductivity, specific heat, and heat conduction of two specimens of zirconium carbide with experimental error of 5, 4 and 9% respectively. The first specimen was made by cold pressing at 1.5-2 tons per sq. cm followed by sintering in argon at 2400°C for two hours. Chemical composition (in %): Zr-86.3, C_{tot}-11.5, W-0.48, N-0.01, O-0.51. Stoichiometry was 0.95. The second specimen was made by hot pressing the powder and sintering in a vacuum at 2100°C and 50 kg per sq. cm for 30 minutes. Chemical composition: Zr-87.4, C_{tot}-10.9, W-0.6, N-0.17, O-0.34. Stoichiometry 0.85. Analysis of the results shows that the Lorentz number for these materials is much higher than the theoretical value for metals, and

1/2

APPROVED FOR RELEASE: 08/09/2001 CIA-RDP86-00513R002201510008-2"

"APPROVED FOR RELEASE: 08/09/2001 CIA-RDP86-00513R002201510008-2

USSR

MEBED, M. N. et al., Teplofizika Vysokikh Temperatur, Vol 11, No 2, Mar/Apr 73, pp 427-429

remains practically unchanged with temperature. Separation of the experimental heat conduction into electron and phonon components showed that the phonon component comprises about 25% and 35% of the total heat conduction for the first and second specimens respectively. The phonon heat conduction shows practically no change with temperature, while the electron component increases linearly with temperature.

2/2

APPROVED FOR RELEASE: 08/09/2001 CIA-RDP86-00513R002201510008-2"

"APPROVED FOR RELEASE: 08/09/2001 CIA-RDP86-00513R002201510008-2

USSR

UDC 631.954:631.811:633.63:632.51

KOROLEV, L. I., GULIDOV, A. M., ZIMOVSKAYA, A. T., and NEPOCHATOV, A. P., Scientific Research Institute of Fertilizers and Insectofungicides, Moscow

"Herbicidal Activity and Selectivity of Preparations on Sugar Beets and Weeds as a Function of the Conditions of Mineral Supply"

Moscow, Agrokhimiya, No 4, Apr 73, pp 114-121

Abstract: Experimental results are reported from the study of the phytotoxicity of herbicides as a function of the nutritional conditions in sugar beets and weeds. Both greenhouse and field trials have shown a change in the reaction of sugar beets and various weeds towards the dichlorourea, eptam (S-ethyl N,N-dipropylthiocarbamate), tillam (S-propyl N-butyl-N-ethylthiocarbamate), pyramine (1-phenyl-4-amino-5-chloropyridazone-6) and murbetol, depending on the amounts of mineral fertilizers added. Significant differences in the content and breakdown of nutritional agents have been noticed in case of bristly foxtail grass treated with dichlorourea, directly related to the level of fertilizers. It has been shown possible to increase herbicidal effectiveness by regulating the supply of minerals.

1/1

APPROVED FOR RELEASE: 08/09/2001 CIA-RDP86-00513R002201510008-2"

"APPROVED FOR RELEASE: 08/09/2001 CIA-RDP86-00513R002201510008-2

USSR UDC: 632.954

KOROLEV, L. L., GULIDOV, A. M., NEPOCHATOV, A. P., Laboratory of Herbicides and Defoliants, Moscow Scientific Research Institute of Fertilizers, Insecticides and Fungicides imeni Ya. V. Samoylov

"Investigation of the Herbicidal Properties of Lenacyl and Ronite"

Moscow, Agrokhimiya, No 6, Jun 72, pp 114-118

Abstract: The article is a report on studies conducted at the Moscow Institute of Fertilizers, Insecticides and Fungicides on the herbicidal properties of Lenacyl (uracyl 634, Venzal, 3-cyclohexyl-5,6-trimethyleneuracyl) in the form of an 80% moist powder, and Ronite (S-ethyl cyclohexylthiocarbamate) in the form of a 72% emulsion concentrate. It was found that in heavy chernozem Lenacyl is most effective as a weed killer in a dose of 3 kg/hectare; however, in view of its destructive effect on sugar beets and on oats (and possibly on other grain crops), it is not advisable to use the herbicide in a dose of more than 2 kg/hectare. Lenacyl is preferably used in even lower doses (0.5-1 kg/hectare) in combination with standard narrow-leaf herbicides. Ronite has excellent herbicidal properties and selectivity when used on sugar

APPROVED FOR RELEASE: 08/09/2001 CIA-RDP86-00513R002201510008-2"

"APPROVED FOR RELEASE: 08/09/2001 CIA-RDP86-00513R002201510008-2

USSR

KOROLEV, L. I., et al., Agrokhimiya, No 6, Jun 72, pp 114-118

beets. It should be used in doses of 4-10 kg/hectare, depending on the type of weeds being controlled. A dose of 4 kg/hectare is highly effective against gray foxtail and annual hedge nettle. When weeds more resistant to the herbicide (field mustard, etc.) are present together with those which are sensitive to Ronite, a dose of 8-10 kg/hectare should be used.

2/2

APPROVED FOR RELEASE: 08/09/2001 CIA-RDP86-00513R002201510008-2"

"APPROVED FOR RELEASE: 08/09/2001 CIA-RDP86-00513R002201510008-2

USSR

[illegible]

KOROLEV, L. I., [illegible], A. P.

"Results of Experiments in Changing the Systematic Application of Herbicides in Crop Rotation"

Moscow, Khimiya v Sel'skom Khozyaystve, No 1, 1972, pp 30-34

Abstract: The results of 6 years of experiments dealing with the effect of various herbicides on the weediness and yield of farm crops are presented. The systematic application of the herbicides in a 5-field crop rotation [illegible]. The set of procedures used in rotating the crops in the crop rotation [illegible] promoted a 4.5-[illegible] reduction in the weeds in the fields on the first rotation. The intensity of the reduction in the number of weeds of individual species was different, as a result of which essential changes took place in the composition of the weeds. Systematic application of the herbicides in the first crop rotation (against a background of agrotechnical measures) led to a [illegible] in the potential weediness of the fields. The greatest reduction in weeds without a negative effect on the crops was provided by the following [illegible] of herbicides: atrazine (4 kg/hectare) in corn fields for grain, [illegible] (3 kg/hectare) in sugar beet fields, 2,4-D (0.5 kg/hectare) in oats and [illegible]

1/2

APPROVED FOR RELEASE: 08/09/2001 CIA-RDP86-00513R002201510008-2"

"APPROVED FOR RELEASE: 08/09/2001 CIA-RDP86-00513R002201510008-2

USSR

KOROLEV, L. I., NEPOCHATOV, A. P., Khimiya v Sel'skom Khozyaystve, No 1, 1[illegible], pp 30-34

promethrine (2 kg/hectare each) in corn fields for green feed. As a rule, aptam, dichloralurea and 2,4-D had no aftereffect on the vegetal crops. [illegible] application of atrazine in corn fields for grain in the amount of 4 kg/hectare are safe for the crop rotation crops. Systematic application of the herbicides with crop rotation from 1965 to 1969 did not noticeably change the agrophysical properties of the soil.

APPROVED FOR RELEASE: 08/09/2001 CIA-RDP86-00513R002201510008-2"

"APPROVED FOR RELEASE: 08/09/2001 CIA-RDP86-00513R002201510008-2

USSR

UDC 632.954:631.531:633.63

GULIDOV, A. M. and KOROLEV, L. I., Moscow Scientific-Research Institute for Fertilizers and Insectofungicides

"A Study of the Herbicidal Characteristics of Simple and Mixed Preparations for Sugar Beet Crops"

Moscow, Agrokhimiya, Nov, No 11, 1970, pp 136-143

Abstract: Most simple herbicides used with sugar beet crops show decided weaknesses, such as short-range action, toxicity for the beet, and so on. The authors conducted field and vegetation tests in connection with sugar beet growing in a thick chernozem soil, to determine the herbicidal effects of six simple herbicides and of pairs of several of them (Epthama, Tillama, dichloralurea, phenazone, Lenacil and Ronite).

Herbicidal effects were somewhat uneven, depending on the type of weed. Lenacil and Ronite were promising against nonperennial dicotyledons and yellow foxtail, respectively. Epthama-phenazone was very effective, but not more so than when its components were used separately.

All of these substances are recommended for further study.

1/1

APPROVED FOR RELEASE: 08/09/2001 CIA-RDP86-00513R002201510008-2"

"APPROVED FOR RELEASE: 08/09/2001 CIA-RDP86-00513R002201510008-2

KOROLEV, L. N.

"Method of Construction of Operational Systems"

Probl. Prikl. mat. i Mekh. [Problems of Applied Mathematics and Mechanics -- Collection of Works], Moscow, Nauka Press, 1971, pp 117-128, (Translated from Referativnyy Zhurnal, Kibernetika, No 3, 1972, Abstract No 3 V532 by the author).

Translation: A method is discussed for development of operational systems for complex computer combinations based on the YaNUS language for description of operational systems. Considerations are presented on the structure of the language, methods of its realization on the basis of the nucleus of the operational system, including interpreting programs for the basic operators of YaNUS.

1/1

APPROVED FOR RELEASE: 08/09/2001 CIA-RDP86-00513R002201510008-2"

"APPROVED FOR RELEASE: 08/09/2001 CIA-RDP86-00513R002201510008-2

KOROLEV, M.

Electronic Power Systems

DEPARTMENT OF THE ARMY
U.S. ARMY FOREIGN SCIENCE AND TECHNOLOGY CENTER
220 SEVENTH STREET NE.
CHARLOTTESVILLE, VIRGINIA 22901

TRANSLATION

In Reply Refer to
FSTC HT 23 921-72
DIA Task No. T70 23 01

Date: 7 February 1973

ENGLISH TITLE: Space Electric Power Plants, Part 2

SOURCE: Pravda, 10 June 1971, Nr. 161 (19304), p. 3, cols. 2-7.

AUTHOR: Korolev, M.

LANGUAGE: Russian

~~REQUESTOR: ARMY-DEF~~
TRANSLATOR: Leo Kanner
COUNTRY: USSR

Abstract:

A discussion of solar batteries and power cells. 7,500 photocells comprising a panel 1 meter square generate more than 100 watts of electrical energy. Space service life of certain semiconductors is given as two to three years. Glass coatings protect panels from heavy protons. Reference is made to the Boeing Co. project of unfolding glass fabric panels for space use. Korolev also states that Soviet scientists confirm the feasibility of such a project but claim that it will be surpassed. Thin film highly efficient photocell panels have been developed in the USSR. Reference is made to an unspecified plant/factory which manufactures not only space power units (utilizing solar energy) but ground solar power plants as well. A 600 watt pilot installation has been in operation in the Karakum desert.

Key Words:

Photoelectric Cell
Electric Equipment Specification
Solar Cell
Silicon Semiconductor
Spacecraft Power Equipment
Thin Film Circuit
Electronics P...

COSATI Subject Field: 09, 10, 14, 22

Country Code: UR

FICHE: FD71/000821/E09

NOTICE

The contents of this publication have been translated as presented in the original text. No attempt has been made to verify the accuracy of any statement contained herein. This translation is published with a minimum of copy editing and graphics preparation in order to expedite the dissemination of information.

Approved for public release. Distribution unlimited.

APPROVED FOR RELEASE: 08/09/2001 CIA-RDP86-00513R002201510008-2"

"APPROVED FOR RELEASE: 08/09/2001 CIA-RDP86-00513R002201510008-2

USSR UDC None

KARMAZINSKIY, A. N., KOROLEV, M. A., KOSTYCHEV, G. I., and SEL'KOV, Ye. S.

"Reliability Research on MOS Transistors"

Moscow, Mikroelektronika, No. 1, 1971, pp 141-154

Abstract: The reliability of integrated circuits using MOS transistors is discussed. Experimental investigation has shown that the practical reliability of such integrated circuits is much less than predicted, and is inferior to that of circuits using bipolar transistors. The purpose of this paper is to find the types of breakdown in these circuits and to determine the qualitative indices of MOS transistor reliability, for transistors made by the planar technique with charge stabilization in the oxide through the use of P_2O_5. A description of the preparation of the transistors under test is given. The types of test performed were: in the switching state, at an ambient temperature of 100° C; for thermal "fatigue," in which the specimens were tested in the switching state with cyclical electrical loading at an ambient temperature of 20° C; with inverse bias applied to the p-n junctions between the diffusion regions of the drain, the source, and the substrate, and for a grounded gate, with a temperature of 100° C. The results of the tests are given fairly exhaustive statistical

1/2

APPROVED FOR RELEASE: 08/09/2001 CIA-RDP86-00513R002201510008-2"

"APPROVED FOR RELEASE: 08/09/2001 CIA-RDP86-00513R002201510008-2

USSR

KARMAZINSKIY, A. N., et al, Mikroelektronika, No. 1, 1971, pp 141-154

treatment, and photographs of transistor breakdowns are shown. The authors concluded that the following must be done to increase the reliability of the transistors: a visual quality check of transistors with oxide and metallization defects; check of transistors whose leakage currents amount to tenths or units of a microampere; preliminary aging. It was also found that the most widespread type of catastrophic breakdown is puncture of the oxide under the gate at the boundary of the drain region.

2/2

APPROVED FOR RELEASE: 08/09/2001 CIA-RDP86-00513R002201510008-2"

"APPROVED FOR RELEASE: 08/09/2001 CIA-RDP86-00513R002201510008-2

USSR

UDC 621.396.6-181.5

SIDOROV, Yu. I., GUSAKOV, V. M., KOROLEV, M. A., FEDORENKO, Yu. S.

"Semiconductor Integrated Circuits Based on MOS Transistors"

Elektron. prom-st'. Nauchno-tekhn. sb. (The Electronics Industry. Scientific and Technical Collection), 1970, No 1, pp 34-38 (from RZh-Radiotekhnika, No 10, Oct 70, Abstract No 10V179)

Translation: The authors survey microcircuits based on MOS transistors put out by non-Soviet companies, pointing out applications and giving parameters. Comparative characteristics are given for microcircuits based on MOS and bipolar transistors. The use of MOS microcircuits in memory units is discussed. Two illustrations, three tables, bibliography of 24 titles. N. S.

1/1

APPROVED FOR RELEASE: 08/09/2001 CIA-RDP86-00513R002201510008-2"

"APPROVED FOR RELEASE: 08/09/2001 CIA-RDP86-00513R002201510008-2

J-9605

Medical prophylactic problems

20

UDK 617-083.881:616.21

CO: Military Medical Journal

Nov 1970

EMERGENCY SURGICAL TREATMENT OF OTORHINOLARYNGOLOGICAL WOUNDS

M. F. Korolev, Colonel, Medical Service

According to the existing system of medical evacuation of wounded military personnel, specialized treatment of otorhinolaryngological wounds will begin in the front-line area itself. In the military district medical facilities, however, treatment will be administered by general medical workers. At the time of the first medical and specialized assistance only emergency steps will be taken as regards vital indications, including efforts to halt bleeding and prevent asphyxia, hypoxia (provided the patient remains at the station long enough) and shock. It should be noted that the need for emergency assistance in case of otorhinolaryngological wounds can arise at any stage of medical evacuation and it may be rendered by both general practitioners and specialists. Accordingly, the extent of such assistance will differ at each stage.

The most frequent reason for the need of emergency aid in cases of otorhinolaryngological wounds is bleeding. According to data cited by [illegible], head and neck wounds involve injuries to the temporal artery in 13.8 percent of the cases; the carotid artery — in 11.6 percent, the external carotid — 9.4 percent, facial — 2.9 percent, intramaxillary — 2.3 percent, spinal — 2.1 percent, and a combination of carotid artery and the internal jugular vein — 8.2 percent. In the case of ear wounds, the intensity of the bleeding may be different depending upon the exact area affected. In the case of injury to the external (surface) zone and the periauricular zone, sources of the bleeding may be the temporal, occipital and posterior auricular arteries and the mastoidal veins. Bleeding can be stopped by a bandage pressing upon the wound, ligation of the bleeding vessel and tamponade of the external auditory passage. In injuries of the inner ear, severe bleeding may result in the nearby intracranial venous sinuses (sigmoid and petrosal), the bulb of the internal jugular vein and the internal carotid artery at the point where it passes through the petrosal part of the temporal bone as well as in the ramifications of the middle meningeal artery, which is most frequently observed in cases of damage to the base of the skull. The prognosis in such cases is uncertain, with indications of brain concussion and shock. Moderate bleeding is stopped in the same way as in the case of injuries to the external zone.

In the case of bleeding resulting from damage to the sigmoid sinus, one of the following steps can be taken: when the bleeding is slight, a simple tamponade is used (the tampon inserted being accordion-shaped); the bleeding spot itself is compressed with a small piece of tissue excised from a muscular mass in the vicinity of a nipple-shaped area — the temporal or nodding muscle (V. N. Ratner); the wound in the sinus is sealed with catgut (Mirotvortsev, 1944); a whiting tamponade is used, involving trepaning and exposing the wall of the sigmoid sinus and the introduction of an iodoform gauze tampon, for a period of from 8 to 10 days, between the walls of the sinus and the edges of the bone.

KOROLEV, M.F.

APPROVED FOR RELEASE: 08/09/2001 CIA-RDP86-00513R002201510008-2"

"APPROVED FOR RELEASE: 08/09/2001 CIA-RDP86-00513R002201510008-2

USSR

UDC 620.179.16

KOROLEV, M. V.

"An Ultrasonic Flaw Detector for the Detection of Exfoliations"

Sverdlovsk, Defektoskopiya, No 2, 1972, pp 85-90

Abstract: A variety of the echo method is described for the detection of exfoliations; it is based upon indication of the polarity of a half-wave acoustic pulse reflected from the phase boundary of the media: coating, base metal, coating -- "exfoliation." This method is used when the acoustic impedence of the cladding material is equal to or is smaller than the impedence of the article, and is particularly effective when this difference is great (if the ratio of the acoustic impedences of the coating and the base metal is greater than 4:6). Use of the proposed method avoids the following drawback of the echo method in the detection of exfoliations. In the "sounding" of an article, the metal coating of which has an acoustic impedence several times smaller than that of the base metal (for example, compositions such as aluminum-babbitt, aluminum-steel, magnesium-copper), the echo signal reflected from the boundary of these metals is very great, and differs little or not at all in amplitude from the echo signal reflected from the exfoliation, if such exists. Time separation of these echo pulses is also

1/2

APPROVED FOR RELEASE: 08/09/2001 CIA-RDP86-00513R002201510008-2"

"APPROVED FOR RELEASE: 08/09/2001 CIA-RDP86-00513R002201510008-2

USSR

KOROLEV, M. V., Defektoskopiya, No 2, 1972, pp 85-90

impossible, since the boundary between the coupled coating and the base metal, and the possible exfoliations, are at the same distance from the external surface of the article coating. A diagram and a description are given of the basic subassemblies of the flaw detector that operates according to this method. The flaw detector is distinguished by a high resolving power (about 0.6 mm for coatings of steel and aluminum), and is designed for unilateral access to the inspected article. 3 figures. 10 references.

2/2

APPROVED FOR RELEASE: 08/09/2001 CIA-RDP86-00513R002201510008-2"

"APPROVED FOR RELEASE: 08/09/2001 CIA-RDP86-00513R002201510008-2

1/2 039 UNCLASSIFIED PROCESSING DATE--18SEP70

TITLE--SHORT PULSE GENERATOR FOR ULTRASONIC DEFECTOSCOPES -U-

AUTHOR--KOROLEV, M.V.

K

COUNTRY OF INFO--USSR

SOURCE--SVERDLOVSK, DEFEKTOSKOPIYA, NO. 1, 1970, PP 127-129

DATE PUBLISHED--------70

SUBJECT AREAS--METHODS AND EQUIPMENT, ELECTRONICS AND ELECTRICAL ENGR.

TOPIC TAGS--ULTRASONIC INSPECTION, NONDESTRUCTIVE TEST, ELECTRONIC OSCILLATOR, PIEZOELECTRIC MATERIAL, CERAMIC MATERIAL, BARIUM TITANATE, LEAD COMPOUND

CONTROL MARKING--NO RESTRICTIONS

DOCUMENT CLASS--UNCLASSIFIED

PROXY REEL/FRAME--1995/0135 STEP NO--UR/0381/70/000/001/0127/0129

CIRC ACCESSION NO--AP0100666

UNCLASSIFIED

APPROVED FOR RELEASE: 08/09/2001 CIA-RDP86-00513R002201510008-2"

"APPROVED FOR RELEASE: 08/09/2001 CIA-RDP86-00513R002201510008-2

2/2 039 UNCLASSIFIED PROCESSING DATE--18SEP70

CIRC ACCESSION NO--AP0100666

ABSTRACT/EXTRACT--(U) GP-0- ABSTRACT. THE OSCILLATOR PROPOSED BY THE AUTHOR IS TRANSISTORIZED AND CAN USE CERAMIC PIEZOELECTRIC COMPONENTS OF EITHER BARIUM TITANATE OR LEAD TITANATE ZIRCONATE, BOTH OF WHICH ARE NOW WIDELY USED IN ULTRASONIC DEFECTOSCOPY. THE CIRCUIT PROVIDES SMOOTH CONTROL OF THE TIME CONSTANT FOR THE COMPENSATING PULSE. THIS IS REQUIRED FOR OBTAINING FULL COMPENSATION OF THE PIEZOELECTRIC COMPONENT'S FREE OSCILLATIONS. THE FREQUENCY OF THE PIEZOELECTRIC CERAMIC IS 3-10 MHZ. OTHER DETAILS OF THE CIRCUIT ARE GIVEN, AND A SCHEMATIC OF THE CIRCUIT ITSELF IS SHOWN. ALSO PRESENTED ARE OSCILLOGRAMS OF THE ULTRASONIC PULSE OUTPUT OF THE OSCILLATOR, THE OUTPUT PULSE WITHOUT COMPENSATION, AND WITH COMPENSATION.

UNCLASSIFIED

APPROVED FOR RELEASE: 08/09/2001 CIA-RDP86-00513R002201510008-2"

"APPROVED FOR RELEASE: 08/09/2001 CIA-RDP86-00513R002201510008-2

USSR UDC 539.3

KOROLEV, N. I.

"The Problem of the Pressure of Two Rigid Stamps at the Boundary of a Circular Aperture in an Elastic Plane"

Izvestiya Akademii Nauk BSSR, Seriya Fiziko-Tekhnicheskikh Nauk, 1971, No 4, pp 5-16.

ABSTRACT: A study is presented of the contact problem for an elastic, isotropic plane with a circular aperture, with two identical, rigid stamps pressing on the boundary of the aperture, on a base of near-circular shape. The problem is reduced to a singular integral-differential equation for the desired pressure; the kernel of the equation is the cotangent. The equation is solved by expanding into a series with respect to sines. An infinite regular system of equations is produced for the coefficients of the series, solved by the turncation method. The distribution of pressure with a contact angle of 45° is presented as an example.

1/1

APPROVED FOR RELEASE: 08/09/2001 CIA-RDP86-00513R002201510008-2"

"APPROVED FOR RELEASE: 08/09/2001 CIA-RDP86-00513R002201510008-2

Acc. Nr. AA0108178

Abstracting Service: CHEMICAL ABST. 6-70

Ref. Code UR 0482

2

135535k Powder wire for surfacing. Vernik, V. S.; Ruleva, A. F.; Kliman, T. G.; Razikov, M. I.; Kopylov, N. V.; Kulishenko, B. A. U.S.S.R. 261,147 (Cl. B 23k), 08 [illegible] 1970, Appl. 14 Aug 1968; From *Otkrytiya, Izobret., Prom. Obrazcy, Tovarnye Znaki* 1970, 47 (4), 146-7. Powder wire for surfacing consisted of a steel casing and a powd. core contg.: graphite 0.24-2.6, ferromanganese 22.5-7, Fe powder 1.9-5.2, W 14-16%, and a steel strip the remainder. MSCL

REEL/FRAME

19891844

APPROVED FOR RELEASE: 08/09/2001 CIA-RDP86-00513R002201510008-2"

"APPROVED FOR RELEASE: 08/09/2001 CIA-RDP86-00513R002201510008-2

USSR

UDC 681.332.65

POLYAKOV, YU. A., BIRYUKOVA-SAVICHEVA, N. V., and KOROLEV, O. I.

"Generator of Random Numbers Following a Given Distribution Law"

[Tr.] Mosk. in-t neftekhim. i gaz. prom-sti ([Works] of Moscow Institute of the Petrochemical and Gas Industry), 1971, vyp. 92, pp 325-330 (from RZh-Avtomatika, Telemekhanika i Vychislitel'naya Tekhnika, No 5, May 72, Abstract No 5B202 by V. R.)

Translation: The article describes a random-number generator designed for use in the digital-computer solution of problems by the Monte Carlo method. The generator is an electronic circuit consisting of two principal functional parts: a generator of random numbers following a uniform distribution law and a functional converter. The random-number generator has five identical channels, each of which is designed to produce one random bit sign. The noise generator is a three-stage amplifier of the transistor noise. The random value of the binary variable is formed on a flip-flop with a complementing input, which receives a random number of pulses determined by the noise envelope. Random codes are converted to analog voltages, which are fed to a diode nonlinearity block, where the given functional dependence is realized.

1/2

APPROVED FOR RELEASE: 08/09/2001 CIA-RDP86-00513R002201510008-2"

"APPROVED FOR RELEASE: 08/09/2001 CIA-RDP86-00513R002201510008-2

USSR

POLYAKOV, YU. A., et al., [Tr.] Mosk in-t neftekhim i gaz. prom-sti, 1971, vyp. 92, pp 325-330

Errors not exceeding 1-2 percent are obtained for many distribution laws (including the exponential and Rayleigh laws). Two illustrations. Bibliography with five titles.

2/2

APPROVED FOR RELEASE: 08/09/2001 CIA-RDP86-00513R002201510008-2"

"APPROVED FOR RELEASE: 08/09/2001 CIA-RDP86-00513R002201510008-2

Steels

USSR

UDC 621.785.53:669.018.8

POPOV, I. N., PEREVERSEV, V. M., KOROLEV, P. G., ZHEREBKIN, O. A., and NESTERENKO, V. I., Kursk Polytechnic Institute

"Cyclic Strength and Residual Stresses of Nitrocemented Steel Containing Chromium and Nickel"

Moscow, Izvestiya Vysshikh Uchebnykh Zavedeniy, Chernaya Metallurgiya, No 3, 1973, pp 152-154

Abstract: The fatigue strength and residual stresses of 20KhGSNT nitrocemented steel containing chromium and nickel were experimentally investigated. The fatigue strength on bending after nitrocementation did not decrease, in comparison with cementation and temper hardening by repeated heating. The high value of the endurance limit of 20KhGSNT nitrocemented steel is a function of the presence on the surface of the nitrocemented layer of compressive residual principal stresses, determined with the help of the "PION 2" device. The presence of compressive residual stresses on the metal surface results also from the analysis of sources of fatigue failures. Two figures, five bibliographic references.

1/1

APPROVED FOR RELEASE: 08/09/2001 CIA-RDP86-00513R002201510008-2"

"APPROVED FOR RELEASE: 08/09/2001 CIA-RDP86-00513R002201510008-2

AA0052414 KOROLEV P.S. UR 0482

Soviet Inventions Illustrated, Section I Chemical, Derwent, 2/70

243463 CHARGING OF IGNITERS such as percussion igniters/primers/ for small-gauge sporting and hunting ammunition comprises vibrational treatment and subsequent pressing of the igniter composition filled in the igniter bodies and is modified, for ensuring long-lasting uniform composition and reliable performance, by introduction into the igniter body before the vibrational treatment of a slight amount of a lacquer such as a 1.5-2.0% cellulose nitrate lacquer. The so formed igniter paste is then subjected to vibration for approx. 35 secs. dried and pressed.

21.12.67. as 1204981/40-23, KOROLEV, P.S. et al. (10.9.69) Bul. 16/5.5.69. Class 78e, 72d, Int. Cl. C 06c, F 42b.

Korolev, P. S.; Kondyakova, Ye. V.; Novozhilova, L. I.; Khludeyev, P. N.

19821045

APPROVED FOR RELEASE: 08/09/2001 CIA-RDP86-00513R002201510008-2"

"APPROVED FOR RELEASE: 08/09/2001 CIA-RDP86-00513R002201510008-2

USSR

UDC 614.31:613.2-099

KOROLEV, R. V.

Sanitarno-Khimicheskaya Ekspertiza Vody i Pishchevykh Produktov (Sanitary-Chemical Examination of Water and Food Products), Moscow, "Meditsina," 1971, 144 pp

Translation: Annotation: Questions of examining drinking water and food products contaminated with toxic agents are considered in systematic form for the first time.

The book presents data on the toxicity, physical and chemical properties of those toxic agents which would probably contaminate food products and water if aggressors were to unleash a world war, and attention is also directed to the possibility of contamination of food products and water through pesticides and toxic industrial chemicals. Descriptions are given of chemical and biological methods of detecting toxic agents in food and water, and of the clinical signs of oral poisoning by toxic agents. Recommendations are made for diagnosing and investigating severe food poisoning, and a system is presented for studying a food item suspected of contamination by toxic agents, selecting samples, and sending them to a laboratory. The appendix gives reference data necessary for the sanitation doctor during the examination process.

1/7

APPROVED FOR RELEASE: 08/09/2001 CIA-RDP86-00513R002201510008-2"

"APPROVED FOR RELEASE: 08/09/2001 CIA-RDP86-00513R002201510008-2

USSR

KOROLEV, R. V., Sanitarno-Khimicheskaya Ekspertiza Vody I Pishchevykh Produktov (Sanitary-Chemical Examination of Water and Food Products), Moscow, "Meditsina," 1971, 144 pp

Descriptions are given of safety measures for work with contaminated products in the laboratory, and detoxifying substances are enumerated, and also maximum permissible quantities of certain toxic agents, and so on.

These questions are of great importance in the system of medical measures to protect the population against the harmful action of toxic agents.

The book is intended for sanitation doctors and toxicologists working at sanitary epidemiological stations and establishments of the departmental sanitary service. The monograph is also of definite interest to workers of the Civil Defense Medical Service.

Table of Contents:

Forword 3
Introduction 5
Chapter One. Food and Water Contaminated by Toxic Agents and Poisons -- Secondary Sources of Mass Poisoning 10

2/7

APPROVED FOR RELEASE: 08/09/2001 CIA-RDP86-00513R002201510008-2"

"APPROVED FOR RELEASE: 08/09/2001 CIA-RDP86-00513R002201510008-2

USSR

KOROLEV, R. V., Sanitarno-Khimicheskaya Ekspertiza Vody i Pishchevykh Produktov (Sanitary-Chemical Examination of Water and Food Products), Moscow, "Meditsina," 1971, 144 pp

The Effect of Toxic Agents on Food Products 11
The Ability of Drinking Water to be Contaminated by Toxic Agents 13
Pesticides and Industrial Toxins -- Possible Sources of Food and Water Contamination During Peace and Wartime 14

Chapter Two. Basic Properties of Toxic Agents and Clinical Work With Oral Poisoning 17
Vesicants 20
General Toxins 26
Nerve Agents (Organophosphorus Agents) 28
Psychotomimetic Agents 42
Physiological Toxic Chemicals 46

Chapter Three. Sanitary-Chemical Reconnaissance of a Food Item 48
Problems of Sanitary-Chemical Reconnaissance 48

3/7

APPROVED FOR RELEASE: 08/09/2001 CIA-RDP86-00513R002201510008-2"

"APPROVED FOR RELEASE: 08/09/2001 CIA-RDP86-00513R002201510008-2

USSR

KOROLEV, R. V., Sanitarno-Khimicheskaya Ekspertiza Vody I Pishchevykh Produktov (Sanitary-Chemical Examination of Water and Food Products), Moscow, "Meditsina," 1971, 144 pp

Using Chemical Reconnaissance Instruments to Detect Toxic Agents in Water and Food Products 49

Chapter Four: Examination of Food Products for Contamination by Toxic Agents

Investigating a Food Item 58

Selecting Product Samples for Quantitative Analysis of the Toxic Agent 59

Compiling the Certificate of Investigation for a Food Item 61

The Expert's Decision 63

The Order of Use of Food Products Contaminated with Toxic Agents 65

Preventive Measures to Protect Food From Toxic Agents 66

Protecting and Detoxifying Individual Stores of Food Products 68

4/7

APPROVED FOR RELEASE: 08/09/2001 CIA-RDP86-00513R002201510008-2"

"APPROVED FOR RELEASE: 08/09/2001 CIA-RDP86-00513R002201510008-2

USSR

KOROLEV, R. V., Sanitarno-Khimicheskaya Ekspertiza Vody i Pishchevykh Produktov (Sanitary-Chemical Examination of Water and Food Products), Moscow, "Meditsina," 1971, 144 pp

Chapter Five. Examination of Water for Contamination by Toxic Agents 72
Investigating a Water Source and Selecting Samples 73
Direct Methods of Analyzing Contamination of Water by Toxic Agents 74
Indirect Methods of Analyzing Contamination of Water by Toxic Agents 74
The Order of Use of Water Contaminated by Toxic Agents 75
Chapter Six. Diagnosis and Investigation of Severe Food Poisoning 79
Diagnosis 79
Compiling the Certificate of Investigation 92
Chapter Seven. Laboratory Methods of Detection and Quantitative Analysis of Toxic Agents in Food Products and Water (Chapter Written with the Participation of V. M. Ignatovich) 94
Extracting Toxic Agents from Food Samples 94
Analysis of Organophosphorus Toxic Agents 96

5/7

APPROVED FOR RELEASE: 08/09/2001 CIA-RDP86-00513R002201510008-2"

"APPROVED FOR RELEASE: 08/09/2001 CIA-RDP86-00513R002201510008-2

USSR

KOROLEV, R. V., Sanitarno-Khimicheskaya Ekspertiza Vody i Pishchevykh Produktov (Sanitary-Chemical Examination of Water and Food Products), Moscow, "Meditsina," 1971, 144 pp

Analysis of Mustard Gas 99
Analysis of Arsenic-Containing Compounds 101
Analysis of Cyanides 104
The Order of Receiving and Investigating Food and Water Samples in the Laboratory 108
Basic Requirements for Laboratories Performing Quantitative Analysis of Toxic Agents in Food and Water 109

Chapter Eight. Biological Methods of Tracing Toxic Agents 111
Brief Description of Biological Methods of Tracing Toxic Substances 111
Techniques of Toxicological Research 114
Toxicological Check of Food and Water for Contamination by Persistent Toxic Agents 121
Toxicological Check of Food and Water for Contamination by Organophosphorus Toxic Agents 125

6/7

APPROVED FOR RELEASE: 08/09/2001 CIA-RDP86-00513R002201510008-2"

"APPROVED FOR RELEASE: 08/09/2001 CIA-RDP86-00513R002201510008-2

USSR

KOROLEV, R. V., Sanitarno-Khimicheskaya Ekspertiza Vody i Pishchevykh Produktov (Sanitary-Chemical Examination of Water and Food Products), Moscow, "Meditsina," 1971, 144 pp

Special Features of the Toxicological Investigation of Food and Water for Contamination by Unknown Toxic Agents 126
Conclusion 129
Appendixes 130
Bibliography 139

7/7

APPROVED FOR RELEASE: 08/09/2001 CIA-RDP86-00513R002201510008-2"

"APPROVED FOR RELEASE: 08/09/2001 CIA-RDP86-00513R002201510008-2

USSR

UDC 621.378.329

BOGDANKEVICH, O. V., KOROLEV, S. V., NASEDKIN, A. A., OLIKEEV, I. M., PETROV, D. M.

"Use of a Microwave-Modulated Electron Beam for Semiconductor Laser Pumping"

Moscow, Kvantovaya Elektronika, Sbornik Statey, No 4, "Sovetskoye Radio", 1971, pp 97-99

Abstract: SHF modulation of semiconductor laser emission is achieved by using a microwave-modulated electron beam for laser pumping. A mode of emission is obtained in which multiple division of the pulse repetition frequency with respect to the frequency of the modulating SHF signal is attained. The authors thank V. A. Dorofeyev and G. N. Yanonis for assistance with the work. Three figures, bibliography of six titles.

1/1

APPROVED FOR RELEASE: 08/09/2001 CIA-RDP86-00513R002201510008-2"

"APPROVED FOR RELEASE: 08/09/2001 CIA-RDP86-00513R002201510008-2

USSR

UDC 621.371.332

AFRAYMOVICH, E. L., VUGMEYSTER, B. O., and KOROLEV, V. A.

"Spectral Characteristics of the Signal Reflected Sporadically from the E Layer"

Moscow, V sb. X Vses, konf. po rasprostr. radiovoln. Tezisy dokl. Sekts. 8 (Tenth All-Union Conference on the Propagation of Radio Waves; Report Theses; Section 8--collection of works) "Nauka," 1972, pp 149-153 (from RZh--Radiotekhnika, No 10, 1972, Abstract No 10A396)

Translation: Results of experimental research conducted by various authors are analyzed. As a result of the analysis, fundamental characteristics of the envelope of the signal reflected from the Es layer are derived. In particular, the relative stability of the placement of the spectral components over a period of about five minutes is established. The results are adequately explained in the framework of the radiation model of the signal reflected from large-scale heterogeneities in the ionization. One illustration, bibliography of nine.

1/1

APPROVED FOR RELEASE: 08/09/2001 CIA-RDP86-00513R002201510008-2"

"APPROVED FOR RELEASE: 08/09/2001 CIA-RDP86-00513R002201510008-2

USSR

UDC: 621.375.4:621.375.132

VOLKOV, Yu. A., KOROLEV, V. A., and SEROV, V. N.

"Designing Two-Stage Amplifier Sections With Maximum Common Inverse Feedback"

Moscow, Radiotekhnika, No 2, 1972, pp 64-68

Abstract: Computation equations and other data are provided for the design of two-stage transistorized amplifiers, each with common feedback circuits, to be used for pulse signals. Two possible circuit diagrams are given, one for voltage and the other for current feedback. A table of amplifier parameters as well as nomograms for obtaining maximum feedback capability for a given gain factor is presented. In addition, there is a recommended step-by-step procedure for the amplifier design.

1/1

APPROVED FOR RELEASE: 08/09/2001 CIA-RDP86-00513R002201510008-2"

"APPROVED FOR RELEASE: 08/09/2001 CIA-RDP86-00513R002201510008-2

USSR

UDC 621.375.121

VOLKOV, Yu. A., KOROLEV, V. A., SEROV, V. N.

"Problem of Optimizing Frequency Characteristics of Wide-Band Amplifiers"

Metody razrab. radioelektron. apparatury. No 1 (Methods of Developing Radio-electronic Equipment. No 1), Moscow, 1970, pp 72-75 (from RZh-Radiotekhnika, No 8, Aug 70, Abstract No 8 D87)

Translation: By an optimal amplitude-frequency characteristic has the authors mean a monotonic characteristic with the greatest upper boundary frequency ω_b determined from the algebraic equation $h^2(\omega_b) = 1/2$. The problem of maximizing ω_b with respect to variable circuit parameters is investigated. The flow diagram of programs for optimization by means of single-parametric search by the Fibonachchi method is presented. The bibliography has three entries.

1/1

APPROVED FOR RELEASE: 08/09/2001 CIA-RDP86-00513R002201510008-2"

"APPROVED FOR RELEASE: 08/09/2001 CIA-RDP86-00513R002201510008-2

Information Theory

USSR

UDC: 621.374.32(088.8)

KOROLEV, V. F., UTEKHIN, A. P.

"A Difference Calculator"

USSR Author's Certificate No 268017, filed 14 Feb 69, published 31 Jul 70 (from RZh-Radiotekhnika, No 2, Feb 71, Abstract No 2G302 P)

Translation: This Author's Certificate introduces a difference calculator which contains a memory circuit of n decade counters connected in series through keys and a conversion module made up of a buffer decade counter and an indexed decade counter, flip-flops, keys, spacing circuits, a difference sign circuit and a program selector. To provide for the possibility of operation on a single counter input, to simplify both the difference device and the data output unit, and to reduce power consumption, the device contains a digital place selector with inputs connected to the program selector and to the output of the indexed decade counter, while the outputs of the digital place selector are connected to the spacing circuit, to the coupling key between the input of the device and the decade counter of the memory circuit, and also to the coupling switches between decade counters. The difference sign circuit connects to the output of the memory circuit and to the coupling keys between the decade counters of the memory circuit, and also to the control pulse spacing circuit and to the program selector which is coupled to the keys of the conversion module.

1/1

APPROVED FOR RELEASE: 08/09/2001 CIA-RDP86-00513R002201510008-2"

"APPROVED FOR RELEASE: 08/09/2001 CIA-RDP86-00513R002201510008-2

USSR

UDC 575.1 576.809.51 578.088.91

GRACHEVA, L. M., and KOROLEV, V. G., Physicotechnical Institute imeni A. F. Ioffe, Academy of Sciences USSR

"Biological Consequences of the Decay of Radioactive Phosphorus Incorporated Into the Cells of Microorganisms"

Moscow, Uspekhi Sovremennoy Biologii, Vol 72, No 1(4), 1971, pp 143-158

Abstract: The article is a review of literature (43 references) on the lethal, mutagenic, and recombination effects of P32 incorporated in the intracellular structures of various microorganisms: phages, bacteria, and fungi. Literature data on the restoration of single strand and double strand breaks induced by the decay of incorporated P32 are discussed. On the basis of analyses of the biological and chemical consequences of the radioactive decay of P32, an outline of the lethal and nonlethal changes which may be produced in the structure of DNA is proposed.

1/1

APPROVED FOR RELEASE: 08/09/2001 CIA-RDP86-00513R002201510008-2"

"APPROVED FOR RELEASE: 08/09/2001 CIA-RDP86-00513R002201510008-2

USSR

K

"A Compass for Mineral Prospectors"

Russian, Frunze, Sovetskaya Kirgiziya, 15 February 1970, p 2

Abstract: The map, which was compiled jointly by the Institute of Geology of the Kirgiz SSR Academy of Sciences and the Institute of Geology and Geophysics of the Siberian Department of the USSR Academy of Sciences, reflects degrees of change in types of rock depending on temperature and pressure in the earth's crust and on tectonic movements.

The first of its type in Central Asia and Kazakhstan and the most detailed in the Soviet Union, this map takes in a wide expanse of territory, including Kirgiziya, eastern Uzbekistan, southern Kazakhstan and part of Tadzhikistan. It will be part of an analogous all-union map, and will be useful to geologist in locating mineral deposits.

Candidates of geological-mineralogical sciences A. Bakirov and N. L. Dobretsov compiled the map, with essential help from map editors, academician V. S. Sobolev and candidate of geological-mineralogical sciences V. G. Korolev.

1/1

APPROVED FOR RELEASE: 08/09/2001 CIA-RDP86-00513R002201510008-2"

"APPROVED FOR RELEASE: 08/09/2001 CIA-RDP86-00513R002201510008-2

USSR

BELYAYEV, Ye. I., KOROLEV, V. K.

"Analysis of an Integral Chain of Logic Invertors with Simple Correlation of Parameters"

Vychisl. Sistemy [Computer Systems -- Collection of Works], No 50, Novosibirsk, 1972, pp 30-43 (Translated from Referativnyy Zhurnal, Kibernetika, No 3, Moscow, 1973, Abstract No 3 V293 by the authors).

Translation: The transmission of a signal in a circuit of logic invertors with positive correlation of parameters is studied. A method is suggested for machine calculation, the complexity and accuracy of which are independent of chain length.

1/1

APPROVED FOR RELEASE: 08/09/2001 CIA-RDP86-00513R002201510008-2"

"APPROVED FOR RELEASE: 08/09/2001 CIA-RDP86-00513R002201510008-2

USSR

UDC 661.682:669.295.4:541.183

GOLUBKOV, YU. V., AGRINSKAYA, L. N., KOROLEV, V. V., and NISEL'SON, L. A.
Scientific Research and Development State Institute of Rare Metal Industry

"Investigation of the Adsorption Purification of Titanium Tetrachloride"

Leningrad, Zhurnal Prikladnoy Khimii, Vol 45, No 8, Aug 72, pp 1661-1664

Abstract: To purify titanium tetrachloride from various admixtures, a combination of chemical processes and fractional disdillation is used in industry. An investigation of the statics and dynamics of adsorption purification over BAU activated charcoal showed that this method is more efficient in removing the impurities $VOCl_3$, Si_2OCl_6, and CCl_3COCl. The BAU charcoal column must be at least 130 cm high for an effective separation of $TiCl_4$ from above impurities.

1/1

APPROVED FOR RELEASE: 08/09/2001 CIA-RDP86-00513R002201510008-2"

"APPROVED FOR RELEASE: 08/09/2001 CIA-RDP86-00513R002201510008-2

Marine

USSR

UDC 629.1.046

KOROLEV, V. V.

"A Mechanized Ship Gangway"

Moscow, Otkrytiya, Izobreteniya, Promyshlennyye Obraztsy, Tovarnyye Znaki, No 21, Jul 73, Author's Certificate No 380524, Division B, filed 30 Jan 70, published 15 May 73, pp 64-65

Translation: This Author's Certificate introduces: 1. A mechanized ship gangplank which includes a rotating folding staircase on a horizontal axle, a landing hinged to the end of the staircase, and a collapsible handrail. As a distinguishing feature of the patent, to speed up unfolding and folding of the gangway the handrail is made with struts hinged to the ship at a point off center from the turning axis of the staircase. 2. A modification of this gangway distinguished by the fact that the staircase is hinged to the hatch doors by rods to ensure safety in unfolding and folding the gangway.

1/2

APPROVED FOR RELEASE: 08/09/2001 CIA-RDP86-00513R002201510008-2"

"APPROVED FOR RELEASE: 08/09/2001 CIA-RDP86-00513R002201510008-2

USSR

KOROLEV, V. V., USSR Author's Certificate No 380524

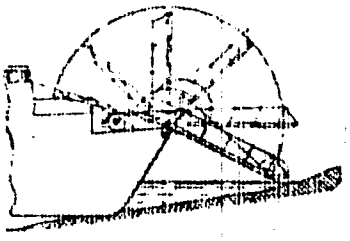

2/2

APPROVED FOR RELEASE: 08/09/2001 CIA-RDP86-00513R002201510008-2"

"APPROVED FOR RELEASE: 08/09/2001 CIA-RDP86-00513R002201510008-2

USSR

DZHIDZHOYEV, M. S., KOROLEV, V. V., MARKOV, V. N., PLATONENKO, V. G., and KHOKHLOV, R. V., Physics Department, Moscow State University imeni M. V. Lomonosov

"Detonation Gas-Dynamic Laser"

Moscow, Pis'ma v Zhurnal Eksperimental'noy i Teoreticheskoy Fiziki, Vol 14, No 2, 20 Jul 71, pp 73-76

Abstract: This article describes a new type of gas-dynamic laser in which the solid material is detonated to obtain the initial high-temperature gas mixture. Previously the high-temperature mixture was obtained in the gas-dynamic lasers by the passage of shock waves in the gas medium and by heating with an electric arc or by igniting the initial gases. The use of detonation of the solid material permits varying the initial pressure and temperature of the gas mixture in a wide range and also substantially simplifying and reducing the dimensions of the experimental set-up. Figure 1 shows a schematic of the experimental set-up; Figure 2 is an oscillogram of the impulse of generation, 500μsec/unit; and Figure 3 shows the output energy. The authors state that by using liquid nitrogen in the described set-up, they can experimentally place the initial material in the reaction volume. By the use of other materials

1/2

APPROVED FOR RELEASE: 08/09/2001 CIA-RDP86-00513R002201510008-2"

"APPROVED FOR RELEASE: 08/09/2001 CIA-RDP86-00513R002201510008-2

USSR

DZHIDZHOYEV, M. S., et al., Pis'ma v Zhurnal Eksperimental'noy i Teoreticheskoy Fiziki, Vol 14, No 2, 20 Jul 71, pp 73-76

the experiments can be theoretically conducted at room temperatures. The article contains 3 figures and 10 bibliographic entries.

2/2

APPROVED FOR RELEASE: 08/09/2001 CIA-RDP86-00513R002201510008-2"

"APPROVED FOR RELEASE: 08/09/2001 CIA-RDP86-00513R002201510008-2

AA0046434 Korolev, V.V. UR 0432

Soviet Inventions Illustrated, Section III Mechanical and General, Derwent, 1-70

237010 HATCH COVER FOR LOWER DECKS comprising pivoted sections moved along rails by means of power cylinders, differing in the leading section having a lever connected via a tie-rod to the framework below the deck. Its axis of rotation is lower than the pivot connecting the adjacent sections. This enables the sections to be rolled out of the vertical position and reduces the height with the hatch open. The power cylinders may be below deck with a folding cover over them interacting via a roller with the leading section. This prevents oil getting into the hold and assists the folding of the sections. Under pressure of working fluid entering the cylinder the rod, drawing in, moves a tie-rod, turning the leading section which turns the folding cover. When the roller comes out of contact with the rail, a lever mechanism begins operating. As the leading section turns, it gradually brings the sections

4

1/5

19781653

APPROVED FOR RELEASE: 08/09/2001 CIA-RDP86-00513R002201510008-2"

"APPROVED FOR RELEASE: 08/09/2001 CIA-RDP86-00513R002201510008-2

AA0046434

nearer till they touch, opening the hatch. To close it, the cylinder is operated to push the tie-rod, turning the leading section. When the axis of the pivot connecting the two sections comes out on the same vertical as the axis of rotation of the leading section, the lever mechanism begins operating, pressing back the driven section. The further mov ement of the sections and cover is under their own weight, and the lever mechanism holds up.

17.7.67 as 1173781/27-11. KOROLEV V.V. (16.6.69) Bul 7/3.2.69. Class 65a. Int.Cl.B 63b.

2/3

19781654

APPROVED FOR RELEASE: 08/09/2001 CIA-RDP86-00513R002201510008-2"

"APPROVED FOR RELEASE: 08/09/2001 CIA-RDP86-00513R002201510008-2

AA0046434

A - A'

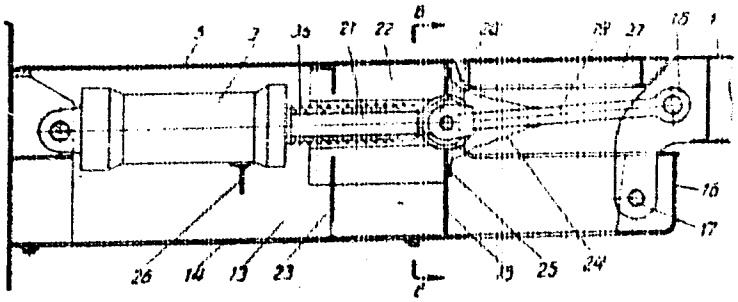

5/5

19781655

APPROVED FOR RELEASE: 08/09/2001 CIA-RDP86-00513R002201510008-2"

"APPROVED FOR RELEASE: 08/09/2001 CIA-RDP86-00513R002201510008-2

USSR UDC 621.52:539.23

MALYUKOV, B.A., UKRAINSKIY, YU. M., KOROLEV, V.YE.

"Nonstandard Method For Determining The Thickness Of Coatings With The Aid Of An X-Ray Fluorescent Spectrometer"

Elektron. tekhnika. Nauchno-tekhn. sb. Materialy (Electronic Technology. Scientific Technical Collection. Materials), 1970, Issue 3, pp 120-121 (from RZh--Elektronika i yeye primeneniye, No 1, January 1971, Abstract No 1A54)

Translation: Formulas are derived for computation of the thickness of coatings, by the intensity of fluorescence under the effect of x-ray radiation. These formulas can be used during x-ray spectroscopic analysis of one-component film without use of standards. The precision of the proposed nonstandard x-ray spectroscopic method was equal to $\sim$ 1.7% during analysis of thin films of tin deposited in a vacuum on pyroceramic substrates with respect to line SnK_{α} and $\sim$ 4% during analysis with respect to line SnL_{α}. G.B.

1/1

APPROVED FOR RELEASE: 08/09/2001 CIA-RDP86-00513R002201510008-2"

"APPROVED FOR RELEASE: 08/09/2001 CIA-RDP86-00513R002201510008-2

USSR UDC: 621.373:530.145.6:621.317.17

MALYUKOV, B. A., KOROLEV, V. Ye., Tuyev, G. V.

"Determining the Thickness of Mirror Coatings in a Semiconductor Laser by the Kissig Method"

Elektron. tekhnika. Nauchno-tekhn. sb. Upr. kachestvom i standartiz. (Electronic Technology. Scientific and Technical Collection, Quality Control and Standardization), 1970, vyp. 4, pp 71-74 (from RZh-Radiotekhnika, No 12, Dec 70, Abstract No 12D342)

Translation: For determining the thickness of mirror coatings, the Kissig method has a number of advantages: it is an absolute method of thickness measurement and does not require standards; it gives high precision; it does not destroy the specimen. A curve is given for reflection from a rhodium film 525 Å thick. All measurements of thicknesses of rhodium films and neodymium oxide films were done with the use of "copper" emission. The reproducibility of the described method was evaluated by measuring the thickness with respect to the maxima and minima of three curves for reflection from the same film. The Kissig method can be used to evaluate the nonuniformity of a coating. The accuracy of determining film thickness is high. Localization of the method is ~3 mm. However, the method is slow.
A. K.

1/1

APPROVED FOR RELEASE: 08/09/2001 CIA-RDP86-00513R002201510008-2"

"APPROVED FOR RELEASE: 08/09/2001 CIA-RDP86-00513R002201510008-2

KOROLEV, V. Ye.

UR 0482

AA0052663

Soviet Inventions Illustrated, Section III Mechanical and General, Derwent, 3-71

244154 TIMBER ROLLING MECHANISM comprises a chassis and a grab with a compound pulley for covering the grab. There are also log grabs for tractors and hoists which are used for rolling timber into water. In order to retain efficiently the bundles of timber during the movement of the mechanism over uneven surfaces, the movable blocks (4) of the pulley system are fixed in the lower jaw (2) of the grab, whilst the end of the rod of the pulley system is fixed on the upper jaw (3) of the grab which is connected to the chassis by a rod (8) regulated according to length. By means of the compound pulleys of the grab the bundle of timber is compressed by the jaws of the mechanism and is retained by them during transportation. The mechanism can be coupled to any hauling tractor.

29.12.67. as 1206439/29-33, LESHKEVICH, A.I. et al. Timber Ind. Mech. & Energetics Res. & Design Inst. (8.10.69) Bul. 17/14.5.69. Class 81a, Int. Cl. B 65g.

18

19821411

APPROVED FOR RELEASE: 08/09/2001 CIA-RDP86-00513R002201510008-2"

"APPROVED FOR RELEASE: 08/09/2001 CIA-RDP86-00513R002201510008-2

AA0052663

Leshkevich, A.I.; Levitskiy, Ya.Ye.; Reutov, Yu.M.; Zaurin, I.P.; Korolev, V.Ye.; Tsentral'nyy Nauchno-Issledovatel'skiy i Proyektno-Konstruktorskiy Institut Mekhanizatsiy i Energetiki Lesnoy Promyshlennosti

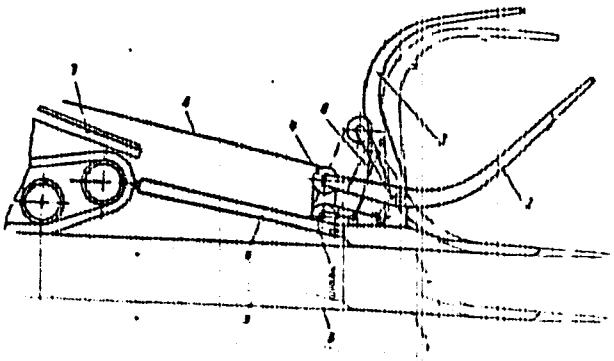

APPROVED FOR RELEASE: 08/09/2001 CIA-RDP86-00513R002201510008-2"

"APPROVED FOR RELEASE: 08/09/2001 CIA-RDP86-00513R002201510008-2

USSR

VOLKOVYSKIY, V. L., ZLOBIN, V. K., KOROLEV, Ye. P.

"The Scale Conversion of Images"

Tr. Ryazan. Radiotekhn. In-ta [Works of Ryazan Institute of Electronic Engineering], 1972, No 36, pp 184-191 (Translated from Referativnyy Zhurnal, Kibernetika, No 1, 1973, Abstract No 1 V825 by the authors).

Translation: Problems of continuous scale conversions are studied as associated with output of images from digital computers. Program and apparatus methods of scaling are suggested.

1/1

APPROVED FOR RELEASE: 08/09/2001 CIA-RDP86-00513R002201510008-2"

"APPROVED FOR RELEASE: 08/09/2001 CIA-RDP86-00513R002201510008-2

USSR UDC 621.039.56(088.8)

KOROLEV, Ye. V., KOSTYLEV, D. V., ANDREYCHIKOV, B. I., PINCHUK, D. Ya., ~~BARANOV, Ya.~~ I.

"Overload Machine"

Peregruzochnaya mashina (cf. English above), Authors Certificate USSR, Class G 21 d 1/00, No. 325635, Announced 30 October 1966, Published 14 March 1972 (from RZh-50. Yadernyye reaktory, No 11, Nov 72, Abstract No 11.50.110 P)

Translation: An overload machine is patented that contains a shell, a platform, mechanisms for coordinate displacement, and a system for television observation. It has two manipulators to increase the reliability for acquiring and displacing nonequilibrium objects and a synchronization mechanism, a manipulator equipped with a device for the smooth increase and limitation of forces and an auxiliary manipulator equipped with a hand screw. The inner tube of the working manipulator was installed on a compression spring which was balanced by a second spring in order to increase the smoothness of shockless installation of the overload object and between the springs there was installed a transducer to control the magnitude of the force. 1 ill.

1/1

APPROVED FOR RELEASE: 08/09/2001 CIA-RDP86-00513R002201510008-2"

"APPROVED FOR RELEASE: 08/09/2001 CIA-RDP86-00513R002201510008-2

USSR UDC 621.396--181.4:001.24

TABARNYY, V. G. and KORCLEV, Yu. V.

"Designing Electronic Circuits With Distributed Parameters"

Kiev, Poluprovodnikovaya tekhnika i mikroelektronika, No. 5, 1971, pp 27-33

Abstract: Proposed in this article is a method of analysis of thin film and integrated circuits in which characteristic parameters of the y,z and other types are used for parts of the circuit having a microstructure with distributed parameters. The method suggests putting the y parameters in the form of bilinear functions of the complex frequency p. The advantage of this approach is the possibility of using the analysis method for linear electronic circuits with lumped parameters. Such microstructures as resistor-dielectric-metal and resistor-dielectric-resistor are considered, and the circuit of a selective amplifier is analyzed by way of example of the application of the proposed method. The authors find that their results for this last circuit differ from those obtained by earlier writers (Volkov, V. M. and Popov, V. P, Radiotekhnika, 1967, 22, 1, 27-31) and explain the reason for the difference. They are connected with the Semiconductor Institute, Ukrainian Academy of Sciences.

APPROVED FOR RELEASE: 08/09/2001 CIA-RDP86-00513R002201510008-2"

"APPROVED FOR RELEASE: 08/09/2001 CIA-RDP86-00513R002201510008-2

USSR UDC: 621.371.061

KALNIBOLOTSKIY, Yu. N., SHOROBOGAT'KO, N. V., and KORCHEV, Yu. V.

"An Algorithm for Tuning Circuits"

Avtomatiz. proyektir. v elektronike. Respub. mezhved. nauchno-t. sb. (Automation of Design in Electronics. Republic Interdepartmental Scientific-Technical Collection) 1970, No. 1, pp 144-149 (from Rzh-Radiotekhnika, No. 3, March 71, Abstract No. 3A139)

Translation: One of the methods for tuning an electronic circuit using a digital computer according to the specified system function and the initial configuration is considered. An algorithm is proposed through which the rated elements can be determined, the configuration of the circuit can be made more accurate, and its characteristic corrected. A block diagram of the programmed solution for this problem by the computer is given. The proposed method can be used also for designing correcting stages and for solving component equations. One illustration, one table, bibliography of three. Resume

1/1

APPROVED FOR RELEASE: 08/09/2001 CIA-RDP86-00513R002201510008-2"

"APPROVED FOR RELEASE: 08/09/2001 CIA-RDP86-00513R002201510008-2

USSR UDC 621.372.061

KOROLEV, Yu. V.

"Using an Extrinsic Algebra for Analyzing and Synthesizing Electronic Circuits"

Avtomatiz. proyektir. v elektron. Resp. mezhved. nauch.-tekhn. sb. (Design Automation in Electronics. Republic Interdepartmental Scientific and Technical Collection), vyp. 2, Kiev, "Tekhnika", 1970, pp 18-28

Abstract: The author presents a survey of the use of an external algebra for construction of algorithms for analysis and synthesis of linear electronic circuits. Formulas are derived for the polynomial coefficients of the circuit functions, allowing a reduction in the redundancy of the computational process during circuit analysis and synthesis. The given formulas are used to develop an algorithm for realization of an electronic circuit from predetermined frequency responses or time characteristics. Two illustrations, bibliography of twelve titles.

1/1

APPROVED FOR RELEASE: 08/09/2001 CIA-RDP86-00513R002201510008-2"

"APPROVED FOR RELEASE: 08/09/2001 CIA-RDP86-00513R002201510008-2

Therapy

USSR

POSPELOVA, V. V., RAKHIMOVA, N. G., KOROLEVA, A. I., D'YAKOVA, Ye. I., KURNOSOVA, N. A., and SMIRNOV, G. V., Moscow Scientific Research Institute of Epidemiology and Microbiology

"New Forms of Kolibakterin -- a Preparation for Nonspecific Prophylaxis and Therapy of Intestinal Infections"

Tashkent, Meditsinskiy Zhurnal Uzbekistana, No 6, 1970, pp 48-49

Abstract: Kolibakterin is a preparation of live bacteria of antagonistic E. coli M-17 strain. It has been used fairly successfully as a drug for nonspecific prophylaxis and therapy of acute dysentery and chronic colitis, and for the restoration of the normal intestinal microflora in various bacterial diseases. However, the form in which it was available -- a loose mass in vacuum ampules -- made tedious weighing and dissolving of individual doses necessary. Furthermore, the bacteria were partly destroyed in the stomach by hydrochloric acid. Early attempts to press the mass into tablets were unsuccessful, since the biological activity of the preparation rapidly decreased. A new method of obtaining kolibakterin in dry form and pressing it into tablets or packing it into gelatin capsules has been developed. Preliminary tests have shown that both the tablets and the capsules are as effective as the original preparation. The next step is to mechanize the procedure and to use acid-resistant capsules.

1/1

APPROVED FOR RELEASE: 08/09/2001 CIA-RDP86-00513R002201510008-2"

"APPROVED FOR RELEASE: 08/09/2001 CIA-RDP86-00513R002201510008-2

Concrete

UDC 539.166:666.942

USSR

CHERKINSKIY, YU. S., KORGLEVA, A. T., and VERESHCHINSKIY, I. V., All-Union Scientific Research Institute of New Construction Materials and Physico-Chemical Institute imeni Karpov

"Effect of Ionizing Radiation on Cement"

Leningrad, Zhurnal Prikladnoy Khimii, Vol 43, No 12, Dec 70, pp 2736-2739

Abstract: Exposure of Portland or Alumina cement to a 200 Mrad dose of γ - radiation has no effect on their crystal structure. Some changes are observed in the structure of these cements: aqueous suspension of irradiated Portland cement reaches its maximum creep strength somewhat faster than the non-irradiated material; the opposite is true for the alumina cement. There is no observable difference in mechanical strength or the degree of hydration between the irradiated and non-irradiated specimens. It has been proposed that the neogenic polymeric hydrates found in the cement rock are formed by polycondensation.

1/1

APPROVED FOR RELEASE: 08/09/2001 CIA-RDP86-00513R002201510008-2"

"APPROVED FOR RELEASE: 08/09/2001 CIA-RDP86-00513R002201510008-2

UNCLASSIFIED PROCESSING DATE--11SEP70

1/2 019

TITLE--REACTION OF FORMALDEHYDE AND HYDROGEN PEROXIDE IN ACID SOLUTIONS -U-

AUTHOR--BARANCHIK, G.N., ZHIGUNOV, I.S., KOROLEVA, G.N., PETRAYEV, E.P., KOROLEVA, G.N.

COUNTRY OF INFO--USSR

SOURCE--VESTSI AKAD. NAVUK BELARUS. SSR, SER. KHIM. NAVUK 1970, (1), 119-21

DATE PUBLISHED--------70

SUBJECT AREAS--CHEMISTRY

TOPIC TAGS--CHEMICAL REACTION MECHANISM, CHEMICAL DECOMPOSITION, CHEMICAL REACTION KINETICS, FORMALDEHYDE, HYDROGEN PEROXIDE

CONTROL MARKING--NO RESTRICTIONS

DOCUMENT CLASS--UNCLASSIFIED

PROXY REEL/FRAME--1987/1075 STEP NO--UR/0419/70/000/001/0119/0121

CIRC ACCESSION NO--AP0104473

UNCLASSIFIED

APPROVED FOR RELEASE: 08/09/2001 CIA-RDP86-00513R002201510008-2"

"APPROVED FOR RELEASE: 08/09/2001 CIA-RDP86-00513R002201510008-2

UNCLASSIFIED PROCESSING DATE--11SEP70

2/2 019

CIRC ACCESSION NO--AP0104473

ABSTRACT/EXTRACT--(U) GP-0- ABSTRACT. DECOMPN. OF CH SUB2 O IN AQ. H SUB2 O SUB2 WAS 1ST ORDER IN RESPECT TO BOTH REACTANTS IN THE TEMP. INTERVAL 20-60DEGREES, WHILE THE DECOMPN. OF H SUB2 O SUB2 IS ZERO ORDER IN RESPECT TO CH SUB2 O, AND 2ND ORDER IN RESPECT TO H SUB2 O SUB2 IN THE 20-40DEGREES INTERVAL, BUT 1ST ORDER AT 60DEGREES. THUS, THE REACTION INVOLVES THE OXION. OF CH SUB2 O BY 1 MOLE H SUB2 O SUB2 FORM H SUB2 O AND HCO SUB2 H, AND DECOMPN. OF 2H SUB2 O SUB2 TO YIELD 2H SUB2 O AND O AS SIMULTANEOUS REACTIONS. THE ZERO ORDER IN RESPECT TO CH SUB2 O INDICATES AN INTERMEDIATE COMPLEX FORMATION IN WHICH CH SUB2 O-O PROBABLY UNDERGO A REARRANGEMENT THAT RESULTS PROBABLY IN PERFORMIC ACID, WHICH THEN DECOMPS. TO EITHER HCO SUB2 H OR CO SUB2 PLUS H SUB2 O. KINETIC DATA ON THE REACTION WERE TABULATED.

UNCLASSIFIED

APPROVED FOR RELEASE: 08/09/2001 CIA-RDP86-00513R002201510008-2"

"APPROVED FOR RELEASE: 08/09/2001 CIA-RDP86-00513R002201510008-2

1/2 019 UNCLASSIFIED PROCESSING DATE--11SEP

TITLE--REACTION OF FORMALDEHYDE AND HYDROGEN PEROXIDE IN ACID SOLUTIONS
-U-

AUTHOR--BARANCHIK, G.N., ZHIGUNOV, I.S., KOROLEVA, G.N., PETRAYEV, E.P.,
KOROLEVA, G.N.
COUNTRY OF INFO--USSR

K

SOURCE--VESTSI AKAD. NAVUK BELARUS. SSR, SER. KHIM. NAVUK 1970, (1),
119-21
DATE PUBLISHED--------70

SUBJECT AREAS--CHEMISTRY

TOPIC TAGS--CHEMICAL REACTION MECHANISM, CHEMICAL DECOMPOSITION, CHEMICAL
REACTION KINETICS, FORMALDEHYDE, HYDROGEN PEROXIDE

CONTROL MARKING--NO RESTRICTIONS

DOCUMENT CLASS--UNCLASSIFIED
PROXY REEL/FRAME--1987/1075 STEP NO--UR/0419/70/000/001/0119/0121

CIRC ACCESSION NO--AP0104473
UNCLASSIFIED

APPROVED FOR RELEASE: 08/09/2001 CIA-RDP86-00513R002201510008-2"

"APPROVED FOR RELEASE: 08/09/2001 CIA-RDP86-00513R002201510008-2

2/2 019 UNCLASSIFIED PROCESSING DATE--11SEP70

CIRC ACCESSION NO--AP0104473

ABSTRACT/EXTRACT--(U) GP-0- ABSTRACT. DECOMPN. OF CH SUB2 O IN AQ. H SUB2 O SUB2 WAS 1ST ORDER IN RESPECT TO BOTH REACTANTS IN THE TEMP. INTERVAL 20-60DEGREES, WHILE THE DECOMPN. OF H SUB2 O SUB2 IS ZERO ORDER IN RESPECT TO CH SUB2 O, AND 2ND ORDER IN RESPECT TO H SUB2 O SUB2 IN THE 20-40DEGREES INTERVAL, BUT 1ST ORDER AT 60DEGREES. THUS, THE REACTION INVOLVES THE OXIDN. OF CH SUB2 O BY 1 MOLE H SUB2 O SUB2 FORM H SUB2 O AND HCO SUB2 H, AND DECOMPN. OF 2H SUB2 O SUB2 TO YIELD 2H SUB2 O AND O AS SIMULTANEOUS REACTIONS. THE ZERO ORDER IN RESPECT TO CH SUB2 O INDICATES AN INTERMEDIATE COMPLEX FORMATION IN WHICH CH SUB2 O-O PROBABLY UNDERGO A REARRANGEMENT THAT RESULTS PROBABLY IN PERFORMIC ACID, WHICH THEN DECOMPS. TO EITHER HCO SUB2 H OR CO SUB2 PLUS H SUB2 O. KINETIC DATA ON THE REACTION WERE TABULATED.

UNCLASSIFIED

APPROVED FOR RELEASE: 08/09/2001 CIA-RDP86-00513R002201510008-2"