"APPROVED FOR RELEASE: 08/09/2001 CIA-RDP86-00513R002201520002-7

Physical Properties

USSR

UDC 546.27.72:541.12.03

KOSTETSKIY, I. L., and L'VOV, S. N., Kherson Pedagogical Institute imeni N. K. Krupskaya

"Some Physical Properties of Cobalt and Nickel Borides"

Sverdlovsk, Fizika Metallov i Metallovedeniye, Vol 33, No 4, Apr 72, pp 773-779

Abstract: The temperature dependences of the specific electric resistance ρ and of the components of thermal conductivity λ and the thermoelectromotive force α of cobalt and nickel borides were experimentally investigated by methods described by S. N. L'vov et al. (Poroshkovaya Metallurgiya, 1966, No 9, 89 & Pravila Tekhnicheskoy Ekspluatatsii, 1961, No 2, 159). The results are discussed by reference to tabulated data and diagrams of the physical properties of cobalt and nickel borides at 290°K and the temperature dependences of ρ, α, and λ for CoB and ferromagnetic borides of cobalt and nickel borides. The supposed relative position of the 3d-, 4s-, and 4p-zones and of Fermi levels for nickel borides are shown. For the latter the magnetic susceptibility χ and the Hall coefficient at room temperature were determined. The concentration of charge carriers, effects of various mechanisms, their degradation, and the disposition of the Fermi level relative

1/2

APPROVED FOR RELEASE: 08/09/2001 CIA-RDP86-00513R002201520002-7"

"APPROVED FOR RELEASE: 08/09/2001 CIA-RDP86-00513R002201520002-7

USSR

KOSTETSKIY, I. I., and L'VOV, S. N., Fizika Metallov i Metallovedeniye, Vol 33, No 4, Apr 72, pp 773-779

to the 3d-zone are analyzed. Two tables, two formulas, three illustrations, twenty-two bibliographic references.

2/2

APPROVED FOR RELEASE: 08/09/2001 CIA-RDP86-00513R002201520002-7"

"APPROVED FOR RELEASE: 08/09/2001 CIA-RDP86-00513R002201520002-7

KOSTEVICH D.N. [redacted]

AA0043435

UR 0482

Soviet Inventions Illustrated, Section I Chemical, Derwent,

203921 A DEVICE FOR COOLING LIQUID SELF-HEATING ANODE in electrolysers for the production of aluminium, by means of metallic ribs with their bottom ends immersed in the liquid anode, is characterised in that in order to control temp. along the surface of the anode and to change over the device without stopping the electrolysis, the cooling ribs are made in the form of sections freely fixed to the anode . These sections are made of steel beams and plates made of copper, aluminium or other highly conducting metals. The proposed device consists of steel beams 1 and plates 2. The latter are fixed to the beams 1 and are immersed half-way down their length in the liquid anode. The temp. of the liquid anode can be controlled over its whole area by decreasing or increasing the number of sections and also the number of plates in the sections. This cooling unit can be replaced by a new one without stopping the electrolysis process. 6.2.67. as 1130087/22-1. M.A.KOROBOV et al. Irkutsk Aluminium Works (4.7.69.) Bul.10/10.3.69. Class 40c. Int.Cl.C22J.

1/3

18

19761762

APPROVED FOR RELEASE: 08/09/2001 CIA-RDP86-00513R002201520002-7"

"APPROVED FOR RELEASE: 08/09/2001 CIA-RDP86-00513R002201520002-7

AA0043435

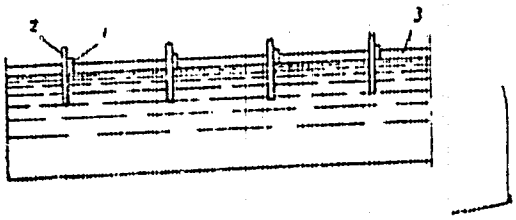

2/3

19761763

APPROVED FOR RELEASE: 08/09/2001 CIA-RDP86-00513R002201520002-7"

"APPROVED FOR RELEASE: 08/09/2001 CIA-RDP86-00513R002201520002-7

AA0043435

AUTHORS: Korobov, M. A.; Shul'ts, B. V.; Yanko, E. A.; [illegible]; Sobol', I.I.; Kostevich, D. N.; Ratmanov, V. N.; Kulakov, A. N.; Kits - Kovyazina, A. A.

Irkutskiy Alyuminiyevyy Zavod

19761764

3/3

APPROVED FOR RELEASE: 08/09/2001 CIA-RDP86-00513R002201520002-7"

"APPROVED FOR RELEASE: 08/09/2001 CIA-RDP86-00513R002201520002-7

USSR UDC:532.501.312

BORISENKOV, A. I., KOSTIKOV, O. N., CHUMACHENKO, V. T.

"Hydraulic Drag with Laminar Flow of a Liquid in a Channel Rotating About Its Axis"

Samoletostr. i Tekhn. Vozd. Flota. Resp. Mezhved. Temat. Nauch.-Tekhn. Sb. [Aircraft Construction and Airfleet Technology. Republic Interdepartmental Thematic Scientific and Technical Collection], 1973, No 32, pp 42-46 (Translated from Referativnyy Zhurnal Aviatsionnyye i Raketnyye Dvigateli, No 11, 1973, Abstract No 11.34.27, from the resume)

Translation: Problems of the influence of rotation of a channel about its axis with laminar and laminarized flow of a fluid are discussed. Data are presented from experimental determination of pressure loss with laminar flow of a fluid in a channel rotating about its axis. 2 Figures; 11 Biblio. Refs.

1/1

APPROVED FOR RELEASE: 08/09/2001 CIA-RDP86-00513R002201520002-7"

"APPROVED FOR RELEASE: 08/09/2001 CIA-RDP86-00513R002201520002-7

1/2 016 UNCLASSIFIED PROCESSING DATE--27NOV70

TITLE--CARBENE CHEMISTRY -U-

AUTHOR-(05)-DANILKINA, L.P., KOMENDANTOV, M.I., KOSTIKOV, R.R., MANDELSHTAM, T.V., RAZIN, V.V.

COUNTRY OF INFO--USSR

SOURCE--VESTN. LENINGRAD. UNIV., FIZ., KHIM. 1970, (1), 123-43

DATE PUBLISHED--------70

SUBJECT AREAS--CHEMISTRY

TOPIC TAGS--CHEMICAL BONDING, MOLECULAR STRUCTURE, CHEMICAL REACTION MECHANISM

CONTROL MARKING--NO RESTRICTIONS

DOCUMENT CLASS--UNCLASSIFIED

PROXY REEL/FRAME--3008/1736 STEP NO--UR/0054/70/000/001/0123/0143

CIRC ACCESSION NO--AP0138709

UNCLASSIFIED

APPROVED FOR RELEASE: 08/09/2001 CIA-RDP86-00513R002201520002-7"

"APPROVED FOR RELEASE: 08/09/2001 CIA-RDP86-00513R002201520002-7

2/2 016 UNCLASSIFIED PROCESSING DATE--27NOV70

CIRC ACCESSION NO--AP0138709

ABSTRACT/EXTRACT--(U) GP-0- ABSTRACT. A REVIEW OF THE STRUCTURE, REACTIVITY, AND REACTION MECHANISMS OF CARBENES WITH COMPOS. CONTG. MULTIPLE BONDS, WITH SPECIAL REF. TO THE WORK OF I. A. DYAKONOV WITH 160 REFS.

UNCLASSIFIED

APPROVED FOR RELEASE: 08/09/2001 CIA-RDP86-00513R002201520002-7"

"APPROVED FOR RELEASE: 08/09/2001 CIA-RDP86-00513R002201520002-7

1/2 008 UNCLASSIFIED PROCESSING DATE--02OCT70

TITLE--ADDITION OF DICHLOROCARBENE TO TRANS,1,PHENYL, 1,3,5,HEXATRIENE -U-

AUTHOR--(02)-KOSTIKOV, R.R., MOLCHANOV, A.P.

COUNTRY OF INFO--USSR

SOURCE--ZH. ORG. KHIM. 1970 6(3) 628

DATE PUBLISHED--------70

SUBJECT AREAS--CHEMISTRY

TOPIC TAGS--CHLORINATED ORGANIC COMPOUND, BENZENE DERIVATIVE, CYCLOPROPANE, HYDROGENATION

CONTROL MARKING--NO RESTRICTIONS

DOCUMENT CLASS--UNCLASSIFIED

PROXY REEL/FRAME--1992/1545 STEP NO--UR/0366/70/006/003/0628/0628

CIRC ACCESSION NO--AP0112539

UNCLASSIFIED

APPROVED FOR RELEASE: 08/09/2001 CIA-RDP86-00513R002201520002-7"

"APPROVED FOR RELEASE: 08/09/2001 CIA-RDP86-00513R002201520002-7

2/2 008 UNCLASSIFIED PROCESSING DATE--02OCT70

CIRC ACCESSION NO--AP0112539

ABSTRACT/EXTRACT--(U) GP-0- ABSTRACT. THE REACTION OF PHCH:CH-CH:CHCH:CH SUB2 WITH CL SUB2 WITH CL SUB2 C: (PREPD. FROM NAOME WITH CL SUB3-CCO SUB2 ET) GAVE APPROX. 13:1 MIXT. OF 1,1,DICHLORO,2,(4,PHENYL, TRANS,BUTA,1,3,DIEN,1,YL)CYCLOPROPANE AND 1,1DICHLORO,2, (BUTA,1,3,DIEN,1,YL),3,PHENYLCYCLOPROPANE. HYDROGENATION OF THESE GAVE, RESP., 1,1,DICHLORO,2,(4,PHENYLBUTYL)CYCLOPROPANE AND 1,1,DICHLORO,2,BUTYL,3,PHENYLCYCLOPROPANE (I). THE REACTION OF CL SUB2 C: WITH PHCH:CH(CH SUB2) SUB2 ME ALSO GAVE I. CL SUB2 C: ALSO REACTED WITH PHCH SUB2 CH SUB2 CH:CHET TO GIVE 1,1,DICHLORO,2,ETHYL, E,(BETA,PHENYLETHYL)CYCLOPECPANE.

UNCLASSIFIED

APPROVED FOR RELEASE: 08/09/2001 CIA-RDP86-00513R002201520002-7"

"APPROVED FOR RELEASE: 08/09/2001 CIA-RDP86-00513R002201520002-7

1/2 012 UNCLASSIFIED PROCESSING DATE--02OCT70

TITLE--REACTION OF DICHLOROCARBENE WITH 2,PHENYL,1,3,BUTADIENE -U-

AUTHOR-(02)-KUSTIKOV, R.R., SESPALOV, A.YA.

COUNTRY OF INFO--USSR

K

SOURCE--ZH. ORG. KHIM. 1970, 6(3) 629

DATE PUBLISHED-------70

SUBJECT AREAS--CHEMISTRY

TOPIC TAGS--CHLORINATED ORGANIC COMPOUND, BENZENE DERIVATIVE, BUTADIENE, CYCLOPROPANE, OXIDATION, CARBOXYLIC ACID

CONTROL MARKING--NO RESTRICTIONS

DOCUMENT CLASS--UNCLASSIFIED

PROXY REEL/FRAME--1992/1544 STEP NO--UR/0366/70/006/003/0629/0629

CIRC ACCESSION NO--AP0112538

UNCLASSIFIED

APPROVED FOR RELEASE: 08/09/2001 CIA-RDP86-00513R002201520002-7"

"APPROVED FOR RELEASE: 08/09/2001 CIA-RDP86-00513R002201520002-7

2/2 012 UNCLASSIFIED PROCESSING DATE--02OCT70

CIRC ACCESSION NO--AP0112538

ABSTRACT/EXTRACT--(U) GP-0- ABSTRACT. THE REACTION OF H SUB2 C:CPHCH:CH SUB2 WITH CL SUB2 C: (PREPD. FROM NAOME AND CL SUB3 CCO SUB2 ET) GAVE 1,1,DICHLORO, 2,PHENYL,2,VINYLCYCLOPROPANE (I). OXION. OF I WITH KMNO SUB4 GAVE 1,1,DICHLORO,2,PHENYLCYCLOPROP,1,YLCARBOXYLIC ACID. CATALYTIC HYDROGENATION OF I GAVE 1,1DICHLORO,2,ETHYL,2,PHENYLCYCLOPROPANE, ALSO PREPD. BY REACTING H SUB2 C:CPHET WITH CL SUB2 C:.

UNCLASSIFIED

APPROVED FOR RELEASE: 08/09/2001 CIA-RDP86-00513R002201520002-7"

"APPROVED FOR RELEASE: 08/09/2001 CIA-RDP86-00513R002201520002-7

USSR
CHEMISTRY
Adsorption Phenomena

USSR

UDC 532.61

KOSTIKOV, V. I., KOSHELEV, Yu. I., and DAVYDOVA, E. A., Moscow Institute of Steel and Alloys

"The Effect of a Homologous Series of Alcohols on Free Surface Energy of Pyrographite"

Moscow, Zhurnal Fizicheskoy Khimii, Vol 47, No 8, Aug 73, p 2149

Abstract: The effect of a homologous series of alcohols on free surface energy of pyrographite was investigated, noting that with increasing alcohol effect per CH_2 group the free surface energy drops by 25 erg/cm^2, reaching a minimum with decyl alcohol.

1/1

APPROVED FOR RELEASE: 08/09/2001 CIA-RDP86-00513R002201520002-7"

"APPROVED FOR RELEASE: 08/09/2001 CIA-RDP86-00513R002201520002-7

Graphite

USSR UDC 546.26-162:620.17:546.31-14

KOSTIKOV, V. I. and Yu. I. Koshelev, Moscow Institute of Steel and Alloys

"Strength of Pyrographite in Binary Metal Melts"

Moscow, Izvestiya VUZ, Chernaya Metallurgiya, No 9, 1973, pp 5-7

Abstract: The authors study the influence of binary metal melts on a lead base with lithium, sodium, and potassium additives on the strength of pyrographite produced at 1950 and 2100 degrees C. Increasing the concentration of alkali metals in the alloys leads to a decrease in the strength of the pyrographite. The greatest reduction in strength is caused by the sodium alloys and the least by the lithium ones. From the strength data the authors have computed the free surface energy of the pyrographite in contact with the binary metal melts. They computed the isotherms of the Gibbs adsorption of alkali metals on the surface of pyrographite. The adsorption has a semi-molecular nature. The article contains 3 figures and 9 bibliographic references.

1/1

APPROVED FOR RELEASE: 08/09/2001 CIA-RDP86-00513R002201520002-7"

"APPROVED FOR RELEASE: 08/09/2001 CIA-RDP86-00513R002201520002-7

Graphite

UDC 546.26-162:620.17:546.31-14

USSR

KOSTIKOV, V. I., and KOSHELEV, YU. I., Moscow Institute of Steel and Alloys

"The Strength of Pyrographite in Contact with Liquid Alkali Metals"

Moscow, Izvestiya Vysshikh Uchebnykh Zavedeniy, Chernaya Metallurgiya, No 7, 1973, pp 18-20

Abstract: An experimental investigation was made of the influence of liquid alkaline metals on the strength of graphite. A vacuum chamber with two current-conducting electrodes was used to determine the strength in contact with the liquid metal and perpendicular to the base of $P_{\parallel 1950}$ and P_{2100} pyrographite specimens, obtained at 1950 and 2100°C precipitation temperatures. The strength of pyrographites in contact with liquid sodium is shown to decrease with increasing temperature. In liquid potassium, a stratification of pyrographite specimens into thin plates takes place at fusing temperature. The latter involves the formation of interlayer compounds of graphite. The results make possible the selection of optimum working temperatures of graphite at a given level of tension stresses in contact with liquid alkali metals. Two figures, four bibliographic references.

1/1

APPROVED FOR RELEASE: 08/09/2001 CIA-RDP86-00513R002201520002-7"

"APPROVED FOR RELEASE: 08/09/2001 CIA-RDP86-00513R002201520002-7

Graphite

UDC 669.11.2.022.4:669.018.4-154

USSR

KOSTIKOV, V. I., and POSOS'YEVA, G. D., Moscow Institute of Steel and Alloys

"Features of Impregnating Graphite With High-Melting Metals"

Moscow, Izvestiya Vysshikh Uchebnykh Zavedeniy, Chernaya Metallurgiya, No 5, 1973, pp 17-19

Abstract: Various theories of capillary impregnation are discussed. A formula developed for the calculation of the impregnation depth of a porous body, based on the theory of capillary impregnation, provides better agreement with experimental data than the kinetic regulatory derived previously by E. W. Washburn (Phys. Rev., 17(3), 1921) and E. K. Rideal (Philos. Mag., 44, 1922, No 246). A model of the porous channel in the form of a cylinder is assumed, in which the capillary radius changes from R to (R- ξ); ξ is the thickness of the carbide layer which increases with rising liquid metal in the capillary. A formula characterizes the dislocation of the metal in pores of graphite for systems with intense chemical interaction. The time dependences of the impregnation height h of PROG-2400 graphite with liquid titanium at 1720°C and 2100°C confirm the theoretically substantiated functional dependence $h = f(\cdot Z)^{1/3}$. Three figures, six formulas, eight bibliographic references.

1/1

APPROVED FOR RELEASE: 08/09/2001 CIA-RDP86-00513R002201520002-7"

"APPROVED FOR RELEASE: 08/09/2001 CIA-RDP86-00513R002201520002-7

UDC 549.212:532.64

USSR

KOSTIKOV, V. I., KOSHELEV, YU. I., and FILIMONOV, YE. F., Moscow Institute of Steel and Alloys

"Features of Molten Titanium and Zirconium Spreading on Pyrographite"

Moscow, Neorganicheskiye Materialy, Vol 9, No 4, Apr 73, pp 592-595

Abstract: The wetting and spreading properties of molten titanium and zirconium on a substrate of pryolytic graphite were studied for two different batches of pyrolytic graphite. One batch of graphite was produced at 2100°C followed by a 3-hour anneal at 2200°C and one rate of precipitation, while the second batch was produced at the same temperature conditions but with a different precipitation rate. Surface energy was 350 erg/cm^2 for the first graphite batch, and 720 erg/cm^2 for the second batch. Temperature relationships of the kinetics of molten titanium spreading were obtained where it was noted that spreading rate decreases with increasing temperature. From these same kinetic curves the loss of free surface energy and interphase energy at the solid-liquid interface were calculated. The good coincidence of surface energy at the solid-liquid interface was shown from data on the kinetics of spreading with values of surface energy at the solid-liquid interface obtained by the method of the rise of molten metal between plane-parallel plates. 3 figures, 2 tables, 6 bibliographic references.

1/1

APPROVED FOR RELEASE: 08/09/2001 CIA-RDP86-00513R002201520002-7"

"APPROVED FOR RELEASE: 08/09/2001 CIA-RDP86-00513R002201520002-7

Graphite

USSR UDC 669.11.2.063.5:669.29-154

GRIGOR'YEV, G. A., ARKHIPKIN, V. I., AGAYEV, A. D., and KOSTIKOV, V. I.,
Moscow Institute of Steel and Alloys

"On the Wetting Kinetics of Graphite With High-Melting Liquid Metals"

Moscow, Izvestiya Vysshikh Uchebnykh Zavedeniy, Chernaya Metallurgiya, No 7, 1972, pp 15-18

Abstract: The Department of Physical Chemistry of the Moscow Institute of Steel and Alloys has developed a new method for describing the process of wetting graphite with high-melting liquid metals. The process is described on the basis of the dimensionality theory by derived criterional equations. The method is used in conjunction with a tensometric device and a loop oscillograph. The force acting on a vertical pin or plate is registered from the initial contact with the horizontal surface of the melt until the equilibrium state is reached. Three types of oscillograms for Ti, Hf, V, Nb, and Zr were derived and the relaxation times of the graphite wetting process with these metals were determined. In the case of wetting with liquid Zr, the kinetics of the process are obviously determined by the propagation rate of the carbide film on the graphite surface, the relaxation time being of the same order as for other metals (2[illegible]0.001). One figure, one table, five formulas, four bibliographic references.

1/1

APPROVED FOR RELEASE: 08/09/2001 CIA-RDP86-00513R002201520002-7"

"APPROVED FOR RELEASE: 08/09/2001 CIA-RDP86-00513R002201520002-7

2

USSR

BOBKOLSKIY, V. N., DERGUNOVA, V. S., IVANOVA, T. N., KOSTIKOV, V. I., LEVIN, V. Ya., TARABANOV, A. S.

"Contact Interaction of Melts in the System Silicon-Niobium with Carbon Materials"

Konstrukts. Materialy na Osnove Grafita [Graphite-Based Structural Materials -- Collection of Works], No 6, Moscow, Metallurgiya Press, 1971, pp 109-115 (Translated from Referativnyy Zhurnal, Khimiya, No 2, 1972, Abstract No 2 B1358 from the Resume).

Translation: The wetting of pyrographite (I), vitreous carbon (II) and graphite (III) by melts in the silicon-niobium system, produced by double arc remelting in purified argon is studied. The final contact wetting angle on porous (III) is equal to zero, on pore-free (I) and (II) it is greater than zero. It is established that the chemical activity of these materials in relationship to melts in the system Si-Nb increases in the sequence: I, II, III.

1/1

APPROVED FOR RELEASE: 08/09/2001 CIA-RDP86-00513R002201520002-7"

"APPROVED FOR RELEASE: 08/09/2001 CIA-RDP86-00513R002201520002-7

USSR

UDC 669.29-15:541.183

KOSTIKOV, V. I., GRIGOR'YEV, G. A., ARKHIPKIN, V. I. and AGAYEV, A.D.,
Moscow Institute of Steels and Alloys

"Surface Tension Measurements of Group IV High-Temperature Metals"

Moscow, Izvestiya vysshikh uchebnykh zavedeniy, Chernaya metallurgiya,
No 3, 1972, pp 25-27

Abstract: The paper deals with surface tension measurements of refractory titanium, zirconium, and hafnium metals by employing the new method of suction of a cylinder into the molten metal versus the sessile drop, suspended drop, and drop weight methods used in earlier research. In the suction method the surface tension of the metals is measured from their force of suction of a solid plate or a cylinder into the melt. A diagram of the surface tension measuring device is shown. Correlation of measurement data shows good agreement with those in earlier papers involving the use of other procedures. The high accuracy of the method coupled with the equally good reproducibility of results makes this method suitable for use in measuring the surface tension of metals featuring extremely high melting points. (1 illustration, 1 table, 8 bibliographic references)

1/1

APPROVED FOR RELEASE: 08/09/2001 CIA-RDP86-00513R002201520002-7"

"APPROVED FOR RELEASE: 08/09/2001 CIA-RDP86-00513R002201520002-7

Miscellaneous

USSR

YELYUTIN, V. P., KOSTIKOV, V. I., and KHARITONOV, A. V., Moscow Institute of Steel and Alloys

"The Effect of Surface Active Media on Free Surface Energy of Pyrographite"

Moscow, Doklady Akademii Nauk SSSR, Vol 202, No 1, Jan-Feb 72, pp 106-108

Abstract: Surface active media lower free surface energy of solid bodies resulting in a decrease of their strength. This study was aimed to give experimental proof that the lowering of this strength is of the adsorptive nature and that the strength of a solid body is directly connected to the surface energy. The pyrographite studied was obtained at a temperature of 2100° and calcined at 3000°C for one hour. The surface active medium consisted of ethanol-water mixture. Preliminarily it was shown that water has no effect on the T of the pyrographite, probably because it is incapable of wetting its surface. On the other hand, addition of alcohol to water lowered the free surface energy of pyrographite. The adsorption isotherm G was calculated from Gibbs equation and was found to reach a maximum at 4.2 mole/l of ethanol concentration. To find the relationship between the free surface energy and strength, a sample of pyrographite was split in air, a 0.1 mm slit was marked on its surface, and the specimen immersed in water and in ethanol-water mixture. Again no effect

1/2

APPROVED FOR RELEASE: 08/09/2001 CIA-RDP86-00513R002201520002-7"

"APPROVED FOR RELEASE: 08/09/2001 CIA-RDP86-00513R002201520002-7

USSR

YELYUTIN, V. P., et al., Doklady Akademii Nauk SSSR, Vol 202, No 1, Jan-Feb 72, pp 106-108

was noted after water immersion, but the slit widened immediately in the aqueous ethanol medium. Thus the adsorption nature of the lowering of pyrographites's surface energy under the influence of aqueous alcohol has been shown experimentally.

2/2

APPROVED FOR RELEASE: 08/09/2001 CIA-RDP86-00513R002201520002-7"

"APPROVED FOR RELEASE: 08/09/2001 CIA-RDP86-00513R002201520002-7

USSR

UDC 621.3.035.2

YELYUTIN, V. P., KOSTIKOV, V. I., DERGUNOVA, V. S., SHURSHAKOV, A. N., POSOS'YEVA, G. D., LUTSENKO, L. N.

"Specifics of Saturation of Porous Graphite Bases with Melted Zirconium"

Tsvetnye Metally, No 1, 1971, pp 46-50.

Abstract: Certain regularities involved in the process of capillary saturation of various porous graphite materials with liquid zirconium are studied. An attempt is made to determine experimentally the apparent activation energy of the process and to determine the influence of individual factors on various stages of the process. The experiments were performed in a specially designed high-temperature installation under a vacuum of $2 \cdot 10^{-2}$ mm hg. The experiments showed that the melt flows energetically over the outer surface of specimens, thus producing elevated capillary rise values on specimens less than 60 mm in diameter due to additional penetration of the melt through side surface pores. Penetration of porous graphite materials with liquid zirconium occurs by flow of the zirconium along poor walls. The time dependence of movement of the saturation front under isothermal conditions forms a quadrativ parabola. The apparent activation of the process of saturation was calculated for type PROG-2400 and PG-50 graphites.

1/1

APPROVED FOR RELEASE: 08/09/2001 CIA-RDP86-00513R002201520002-7"

"APPROVED FOR RELEASE: 08/09/2001 CIA-RDP86-00513R002201520002-7

Graphite

USSR

UDC 669.3.035.2

YELYUTIN, V. P., KOSTIKOV, V. I., DERGUNOVA, V. S., SHURSHAKOV, A. N., POSOS'YEVA, G. D., and KHAKIMOVA, D. K.

"Effect of the Degree of Efficiency of a Graphite Grid on the Velocity of its Treatment with Liquid Zirconium"

Tsvetnye Metally, No 4, Apr 71, pp 51-52

Abstract: Studies were continued on the penetration of liquid metals, in this case, zirconium, into the pores of graphite. Previous work showed that the penetration of zirconium into the pores reached a maximum and that zirconium carbide was formed. In the present work, a study was made of the effect of the ideal structure of the porous graphite on the velocity of penetration by the liquid zirconium. Cylindrical samples of carbon 20 mm in diameter and 60 mm in length were prepared from PROG-2400 stock. The samples were fired in an annular kiln at 1250°C for 280 hours, placed in graphite crucibles, covered with coke, and graphitized in a vacuum of 5×20^{-2} mm at 2000, 2400, and 2800°C for one hour.

X-ray diffraction patterns were made to determine the degree of conversion and then the samples were saturated with liquid zirconium at 1800, 2100, and 2250°C. The contact time varied between 5 to 20 sec; the velocity

1/2

APPROVED FOR RELEASE: 08/09/2001 CIA-RDP86-00513R002201520002-7"

"APPROVED FOR RELEASE: 08/09/2001 CIA-RDP86-00513R002201520002-7

USSR

YELYUTIN, V. P., et al., Tsvetnye Metally, No 4, Apr 71, pp 51-52

in the rise of the melt in the pores was determined. X-ray diffraction showed that the samples processed at 2000°C have a turbostratic carbon structure. Thermal processing at 2400 and 2800°C leads to the appearance and breakdown of a three-dimensional ordering. The method of Maur and Mering was used to determine the extent of graphitization. The increase in the height of the melt in the pore with time gives a parabolic curve.

The average velocity of penetration is decreased with an increase in the interplanar constant and is the largest at 2100°C. As the melt penetrates along the surface of the pore, a chemical reaction occurs at the liquid zirconium-graphite interface, forming zirconium decreases as a result of the precipitation of zirconium carbide and a diffusion of carbon across the carbide layer.

The viscosity of the liquid zirconium also increases due to the presence of zirconium carbide and this in turn slows the penetration. The extent of graphitization can change the velocity of the firing process even without temperature changes.

2/2

APPROVED FOR RELEASE: 08/09/2001 CIA-RDP86-00513R002201520002-7"

"APPROVED FOR RELEASE: 08/09/2001 CIA-RDP86-00513R002201520002-7

USSR

UDC 546.26+66.022.4

YELYUTIN, V. P., ANIKEYEV, YE. F., KOSTIKOV, V. I., and KEVIN, V. YA., Moscow Institute of Steels and Alloys

"Impregnation of Compact Graphites With Melts of the System Silicon-Zirconium"

Moscow, Khimiya Tverdogo Topliva, No 1, Jan/Feb 71, pp 147-153

Abstract: The mechanism of impregnating graphites of the MPG (expansion unknown) class with liquid silicon had been studied previously. A dense composition of the type graphite-silicon -- carbide-silicon could be obtained in this way if one worked in oxidizing media and the temperature did not exceed the melting point of silicon; pure silicon always remained in the graphite pores. To avoid this disadvantage, alloys of silicon with some active element, which can interact with silicon and graphite, were used. In this case, it was found to be possible to bond the excess silicon which had not been changed into silicon-carbide, into some silicide. Two alloys were used in this study: Si+10% Zr and Si+ 25% Zr. The graphite sample was added to the respective melt in a corundum-lined crucible and kept in contact for the required time period. After the experiment, the Zr and Al contents in the melt were determined. It was found that the Zr stayed practically unchanged. The Al content in the melts did not exceed 0.1%. The impregna-

1/2

APPROVED FOR RELEASE: 08/09/2001 CIA-RDP86-00513R002201520002-7"

"APPROVED FOR RELEASE: 08/09/2001 CIA-RDP86-00513R002201520002-7

USSR

YELYUTIN, V. P., et al., Khimiya Tverdogo Topliva, No 1, Jan/Feb 71, pp 147-153

tuon process could be divided into two parts: during the initial part (0-50 sec.), the impregnation depth depends on the square root of the time. With longer interaction times, i.e., t > 50 sec., surface diffusion of the atoms along the pore walls takes place. The mass transfer process was found to be described where t is the time and a and c are constants. Constants a and c as well as the rate of the impregnation process were calculated for three different MPG graphites at three different temperatures (1410, 1450, and 1550°C) treated with the two melts. It was found to be correct to consider the impregnation of graphite by the melts as a wetting process over the walls of the pores.

2/2

APPROVED FOR RELEASE: 08/09/2001 CIA-RDP86-00513R002201520002-7"

"APPROVED FOR RELEASE: 08/09/2001 CIA-RDP86-00513R002201520002-7

USSR

UDC 66.063.5

KOSTIKOV, V. I., MAURAKH, M. A., and NOZHKINA, A. V., Moscow Institute of Steel and Alloys

"Wetting of Diamonds and Graphite by Liquid Alloys of Iron With Titanium"

Kiev, Poroshkovaya Metallurgiya, No 1 (97), Jan 71, pp 79-82

Abstract: A study was made of the wetting of single diamond crystals and plates cut from them along the (100) facet and pyrolytic graphite. The test procedures are described and the results of the experiments are presented. The tendency of liquid iron and its alloys with titanium toward wetting diamonds is higher for the (100) facet and lower for the (111) natural facet. Pyrographite occupies an intermediate position. Introduction of more than 30% titanium into the iron improves wettability of diamonds and graphite by it. The magnitude of the contact angle of pure iron in pyrographite is 50°, and that of iron alloy with 3.9% C is about 110°. The energy of adhesion of iron to diamonds along the (100) facet is 3,160 ergs/cm^2, and on the (111) facet, 2,590 ergs/cm^2. The energy of adhesion to pyrographite is 2,960 ergs/cm^2. It was found that titanium increases the energy of adhesion of iron to graphite and diamonds.

1/2

APPROVED FOR RELEASE: 08/09/2001 CIA-RDP86-00513R002201520002-7"

"APPROVED FOR RELEASE: 08/09/2001 CIA-RDP86-00513R002201520002-7

USSR

KOSTIKOV, V. I., et al, Poroshkovaya Metallurgiya, No 1 (97), Jan 71, pp 79-82

Graphs are presented showing the wetting contact angle of diamonds and graphite by FeTi alloys as a function of titanium content, the variation of the wetting contact angle of diamonds and pyrographite by iron as a function of contact time for both the (100) and (111) facets, and the spreading of Fe-Ti alloys over diamonds and pyrographite as a function of Ti content.

2/2

APPROVED FOR RELEASE: 08/09/2001 CIA-RDP86-00513R002201520002-7"

"APPROVED FOR RELEASE: 08/09/2001 CIA-RDP86-00513R002201520002-7

Graphite

USSR UDC: 546.28-162

YELYUTIN, V.P., [redacted], LEVIN, V. YA., Moscow Institute of Steel and Alloys Moscow, Ministry of Higher and Secondary Specialized Education RSFSR

"Combined Coatings on Graphite"

Moscow, Neorganicheskiye Materialy, Vol 6, No 3, 1970, pp 414-417

Abstract: Protective coatings of alloys in the system Si-Zr on graphite were studied. Three types of graphites were used and the alloys included pure Si, Si+5, 10, 20 and 25% Zr. Flowability and flow-kinetics, the degree of saturation, and the structure of the coatings produced were studied. The coatings are not protective without subsequent roasting and diffusion roasting leads to the formation of a combined SiC + ZrC + Si_xZr_y coating on compact graphites and a carbide coating on porous graphites.

1/1

APPROVED FOR RELEASE: 08/09/2001 CIA-RDP86-00513R002201520002-7"

"APPROVED FOR RELEASE: 08/09/2001 CIA-RDP86-00513R002201520002-7

USSR

K

UDC 549.212+66.01

ANIKEYEV, YE. F., KOSTIKOV, V. I., LEVIN, V. YA., and LEYTENSKAY, G. M., Moscow Institute of Steel and Alloys, Moscow, Ministry of Higher and Secondary Specialized Education RSFSR

"Mechanism of Liquid Silicon Impregnation of Graphite"

Moscow, Khimiya Tverdogo Topliva, No 4, 1970, pp 143-146

Abstract: A study was made of impregnation of dense graphites MPG-5, MPG-6, and MPG-8 (porosity of 12, 15, and 20%, respectively) with liquid silicon in the 1410-1550° temperature range. The mass transfer process can be divided into two stages: viscid flow of liquid silicon along graphite pores (0.50 seconds) with 11.4-14.2 kcal/mole energy of activation and superficial diffusion of silicon along walls of graphite pores (50-180 seconds) with 45.0-53.2 kcal/mole energy of activation.

1/1

APPROVED FOR RELEASE: 08/09/2001 CIA-RDP86-00513R002201520002-7"

"APPROVED FOR RELEASE: 08/09/2001 CIA-RDP86-00513R002201520002-7

Graphite

USSR

ARKHIPKIN, V. I., KOSTIKOV, V. I., GAUKHMAN, YU. V., and RUBINCHIK, YE. A.,
Moscow Institute of Steel and Alloys

"Two-Layer Protective Coatings on Graphite"

Kiev, Poroshkovaya Metallurgiya, No 5, May 70, pp 55-59

Abstract: In view of the widespread use of graphite in modern technology and the advantages of tungsten coatings on graphite, studies were conducted of intermediate layers to decrease carbon diffusion into tungsten and its detrimental effect on the exploitational properties of the coating. In the experiments, intermediate layers of SiC, TiC, ZrC, and HfC were applied on two types of graphite: MG-1 and AG-1500. The carbide layers were applied by spreading, using the method developed earlier by V. P. Yelyutin and his associates. The external tungsten coating was applied by plasmic spraying using the UPU-3 device in a chamber with a controllable medium (purified argon). The density of tungsten coatings obtained by this method was about 90%.

Interaction in the systems graphite -- metal carbide -- tungsten were studied, and the parameters of mutual diffusion of metal atoms in these systems were determined. As a result of the investigations conducted, it was established that the most promising intermediate layer material is hafnium carbide. The use of silicon

1/2

APPROVED FOR RELEASE: 08/09/2001 CIA-RDP86-00513R002201520002-7"

"APPROVED FOR RELEASE: 08/09/2001 CIA-RDP86-00513R002201520002-7

USSR

ARKHIPKIN, V. I., et al., Poroshkovaya Metallurgiya, No 5, May 70, pp 55-59

carbide intermediate layers is inexpedient due to the formation of comparatively low-melting tungsten silicides.

2/2

APPROVED FOR RELEASE: 08/09/2001 CIA-RDP86-00513R002201520002-7"

"APPROVED FOR RELEASE: 08/09/2001 CIA-RDP86-00513R002201520002-7

UNCLASSIFIED

TITLE--COMPOSITE COATINGS ON GRAPHITE -U- PROCESSING DATE--23OCT70

AUTHOR-(03)-YELYUTIN, V.P., KOSTIKOV, V.I., LEVIN, V.YA.

COUNTRY OF INFO--USSR

SOURCE--IZV. AKAD. NAUK SSSR, NEORG. MATER. 1970, 6(3), 414-17

DATE PUBLISHED-------70

SUBJECT AREAS--MATERIALS

TOPIC TAGS--POROSITY, GRAPHITE, PROTECTIVE COATING, COMPOSITE MATERIAL, SILICON ALLOY, ZIRCONIUM ALLOY, CARBIDE

CONTROL MARKING--NO RESTRICTIONS

DOCUMENT CLASS--UNCLASSIFIED

PROXY REEL/FRAME--1993/0705 STEP NO--UR/0363/70/006/003/0414/0417

CIRC ACCESSION NO--AP0113569

UNCLASSIFIED

APPROVED FOR RELEASE: 08/09/2001 CIA-RDP86-00513R002201520002-7"

"APPROVED FOR RELEASE: 08/09/2001 CIA-RDP86-00513R002201520002-7

272 047

UNCLASSIFIED

CIRC ACCESSION NO--AP0113569 PROCESSING DATE--23OCT70

ABSTRACT/EXTRACT--(U) GP-0- ABSTRACT. THE POSSIBILITY OF PREPG. PROTECTIVE COATINGS ON GRAPHITE FROM ALLOYS OF THE SI-ZR SYSTEM WAS INVESTIGATED. THREE BRANDS OF GRAPHITE WERE STUDIED. ALLOYS OF SI WITH 0, 5, 10, 20, OR 25PERCENT ZR WERE INVESTIGATED. THE ALLOYS WERE PREPD. BY DOUBLE ARC MELTING IN AN AR ATM. FROM 99.99PERCENT PURE SI AND FROM IODIDE ZR. THE COATING WAS APPLIED IN 2 STAGES. THE SPREADABILITY, THE KINETICS OF SPREADING, AND THE IMPREGNATION OF GRAPHITES OF VARIOUS D. BY LIQ. ALLOYS OF THE SI-ZR SYSTEM WERE STUDIED. THE COATINGS APPLIED ONTO GRAPHITE FROM LIQ. SI-ZR ALLOYS WITHOUT THE SUBSEQUENT ANNEALING ARE NOT PROTECTIVE. DIFFUSION ANNEALING RESULTS IN THE FORMATION OF A COMPOSITE SIC PLUS ZRC PLUS SI SUBX ZR SUBY COATING ON DENSE GRAPHITES AND OF A CARBIDE (SIC PLUS ZRC) COATING ON POROUS GRAPHITES. FACILITY: MOSK. INST. STALI SPLAVOV, MOSCOW, USSR.

UNCLASSIFIED

APPROVED FOR RELEASE: 08/09/2001 CIA-RDP86-00513R002201520002-7"

"APPROVED FOR RELEASE: 08/09/2001 CIA-RDP86-00513R002201520002-7

2/2 037 UNCLASSIFIED PROCESSING DATE--13NOV70

CIRC ACCESSION NO--AP0124246

ABSTRACT/EXTRACT--(U) GP-0- ABSTRACT. THE SURFACE TENSION AND DENSITY OF SI, TI MELTS CONTG. UP TO 20PERCENT TI WERE STUDIED AT 1350-1700 DEGREESC. THE SURFACE TENSION ROSE WITH TI CONTENT, FROM 800 TO 1000 ERG-CM PRIME2 OVER THE RANGE IN QUESTION AT 1500 DEGREESC. CHEMICAL INTERACTION BETWEEN THE SI AND TI ATOMS TOOK PLACE MAINLY WITHIN THE MELT AND HAD LITTLE EFFECT ON PURELY SURFACE PROPERTIES. THE DENSITY OF THE MELT CONTG. 20PERCENT TI WAS 2.75 G-CM PRIME3 AT 1500 DEGREESC (2.46 IN THE ABSENCE OF TI).

UNCLASSIFIED

APPROVED FOR RELEASE: 08/09/2001 CIA-RDP86-00513R002201520002-7"

"APPROVED FOR RELEASE: 08/09/2001 CIA-RDP86-00513R002201520002-7

1/2 020 UNCLASSIFIED PROCESSING DATE--04DEC70

TITLE--SURFACE TENSION AND DENSITY OF MELTS IN THE SILICON ZIRCONIUM SYSTEM -U-

AUTHOR-(03)-YELYUTIN, V.P., KOSTIKOV, V.I., LEVIN, V.YA.

COUNTRY OF INFO--USSR

SOURCE--IZVEST. V. U. Z. TSVETNAYA MET., 1970, (2), 131-133

DATE PUBLISHED--------70

SUBJECT AREAS--MATERIALS

TOPIC TAGS--SURFACE TENSION, THERMAL EFFECT, ZIRCONIUM ALLOY, SILICON ALLOY, ISOTHERM, SPECIFIC DENSITY

CONTROL MARKING--NO RESTRICTIONS

DOCUMENT CLASS--UNCLASSIFIED

PROXY REEL/FRAME--3003/1501 STEP NO--UR/0149/70/000/002/0131/0133

CIRC ACCESSION NO--AT0130430

UNCLASSIFIED

APPROVED FOR RELEASE: 08/09/2001 CIA-RDP86-00513R002201520002-7"

"APPROVED FOR RELEASE: 08/09/2001 CIA-RDP86-00513R002201520002-7

2/2 020 UNCLASSIFIED PROCESSING DATE--04DEC70

CIRC ACCESSION NO--AT0130430

ABSTRACT/EXTRACT--(U) GP-0- ABSTRACT. THE SURFACE TENSION AND DENSITY OF MELTS OF THE SI-ZR SYSTEM CONTG. ZR UP TO 30PERCENT WERE STUDIED AT TEMP. UP TO 1500DEGREESC. THE TEMP. COEFF. OF THE DENSITY OF THE ALLOYS WAS CONSIDERABLY GREATER THAN THAT OF PURE SI AND INCREASED WITH INCREASING PROPORTION OF ZR IN THE MELT. THE SURFACE TENSION ISOTHERM AT 1500DEGREESC DIFFERED FUNDAMENTALLY FROM THAT CHARACTERIZING THE SI-TI SYSTEM, BEING RATHER CLOSER TO THAT EXPECTED FOR IDEAL SOLUTIONS. MELTS CONTG. ZR OVER 25PERCENT EXHIBITED MICRO INHOMOGENEITIES.

UNCLASSIFIED

APPROVED FOR RELEASE: 08/09/2001 CIA-RDP86-00513R002201520002-7"

"APPROVED FOR RELEASE: 08/09/2001 CIA-RDP86-00513R002201520002-7

USSR

UDC 621.396.677

KOSTIKOV, V. U.

"Electromagnetic Field of a Wire of Finite Length in a Multilayered Earth"

Nauch. tr. Omsk. in-t inzh. zh.-d. transp. (Scientific Works of the Omsk Institute of Railroad Transportation Engineers), 1971, No 130, pp 62-72 (from RZh-Radiotekhnika, No 7, Jul 72, Abstract No 7B59)

Translation: A study was made of the field theory of a linear source of finite dimensions with arbitrary positioning of it in a multilayered earth. An estimate of the "end effect" of a linear conductor is presented. The concepts of the equivalent wave numbers are introduced which significantly facilitate obtaining the solutions for components of the electromagnetic field of a linear source in multilayered media. There are 4 illustrations and a 3-entry bibliography.

1/1

APPROVED FOR RELEASE: 08/09/2001 CIA-RDP86-00513R002201520002-7"

"APPROVED FOR RELEASE: 08/09/2001 CIA-RDP86-00513R002201520002-7

USSR

UDC 621.396.677

KOSTIKOV, V. U.

"Electromagnetic Field of a Horizontal Electric Dipole in a Multilayer Earth"

Nauch. tr. Omsk. in-t inzh. zh.-d. transp. (Scientific Works of the Omsk Institute of Railroad Transportation Engineers), 1971, No 130, pp 36-42 (from RZh-Radiotekhnika, No 7, Jul 72, Abstract No 7B58)

Translation: A study was made of the field theory of a horizontal electric dipole insulated from the environment. The solutions were obtained for directivity of the dipole field with arbitrary position of it in a stratified medium. It is demonstrated that the isolated dipole is an ideal elementary force of an electromagnetic field the behavior of which satisfied a class of problems of the field theory of linear sources of arbitrary form in a nonuniform environment. There is 1 illustration.

1/1

APPROVED FOR RELEASE: 08/09/2001 CIA-RDP86-00513R002201520002-7"

"APPROVED FOR RELEASE: 08/09/2001 CIA-RDP86-00513R002201520002-7

Amplifiers

USSR

UDC 621.375.93.002.2

GERTSENSHTEYN, M. YE., KOSTIN, A. A., MAGNUSHEVSKIY, V. R., MARKOV, V. V., SOBOLEVA, O. A., SOLOVEY, L. G., Active Members of the Society

"Plug-in Module for a Wide Band Parametric Amplifier"

Moscow, Radiotekhnika, No 11, 1971, pp 105-107

Abstract: A description is presented of a miniature modular design of a centimeter-range parametric amplifier with integral structure of the oscillatory systems. The operating principle of the module is discussed, and schematic diagrams of basic elements are presented. The primary oscillatory system comprises a varactor diode and an auxiliary lumped inductance included in series with respect to the signal frequency. The pass band of the module is actually determined by the time constant of the diode and is 8-9% of the operating frequency at a level of 1 decibel with amplification of 10-11 decibels. Further expansion of the pass band to 11-12% of the operating frequency is obtained by using a second corrector. The frequency-amplitude characteristic of the module with the additional corrector is presented. The application of a step structure as the corrector, transformer and rejector of the other frequencies permits optimal coupling of the

1/2

APPROVED FOR RELEASE: 08/09/2001 CIA-RDP86-00513R002201520002-7"

"APPROVED FOR RELEASE: 08/09/2001 CIA-RDP86-00513R002201520002-7

USSR

GERTSENSHTEYN, M. YE., et al, Radiotekhnika, No 11, 1971, pp 105-107

primary oscillatory system to the matching quadripole in the signal circuit and realization of pass bands of the parametric module which are limiting for the diode used. This design is applicable in all cases where the series resonance frequency of the diode is between the signal frequency and the open-circuit frequency.

2/2

APPROVED FOR RELEASE: 08/09/2001 CIA-RDP86-00513R002201520002-7"

"APPROVED FOR RELEASE: 08/09/2001 CIA-RDP86-00513R002201520002-7

1/2 022 UNCLASSIFIED PROCESSING DATE--13NOV70

TITLE--STABILIZATION OF ELECTRONS AND IONIC REACTIONS IN IRRADIATED KETONES -U-

AUTHOR-(04)-REVINA, A.A., BORISENKO, G.L., BAKH, N.A., KOSTIN, A.K.

COUNTRY OF INFO--USSR

SOURCE--DOKL. AKAD. NAUK SSSR 1970, 191(4), 845-8 (CHEM)

DATE PUBLISHED-------70

SUBJECT AREAS--CHEMISTRY, NUCLEAR SCIENCE AND TECHNOLOGY

TOPIC TAGS--GAMMA RADIATION, ALIPHATIC KETONE, EPR SPECTRUM, ALCOHOL, ELECTRON INTERACTION, ELECTRON RADIATION, ION INTERACTION, COBALT ISOTOPE

CONTROL MARKING--NO RESTRICTIONS

DOCUMENT CLASS--UNCLASSIFIED

PROXY REEL/FRAME--3006/1216 STEP NO--UR/0020/70/191/004/0845/0848

CIRC ACCESSION NO--AT0134890

UNCLASSIFIED

APPROVED FOR RELEASE: 08/09/2001 CIA-RDP86-00513R002201520002-7"

"APPROVED FOR RELEASE: 08/09/2001 CIA-RDP86-00513R002201520002-7

2/2 022 UNCLASSIFIED PROCESSING DATE--13NOV70

CIRC ACCESSION NO--AT0134890

ABSTRACT/EXTRACT--(U) GP-0- ABSTRACT. EPR SPECTRA ARE REPORTED FOR ALIPHATIC KETONES WHICH HAD BEEN IRRADIATED (GAMMA PRIME60 CO) IN THE DARK AT 77DEGREESK. ALL PRODUCED A SHARP SINGLET LINE TYPICAL OF STABILIZED ELECTRONS IN POLAR MEDIA. THE TOTAL CONCN. OF THE RADICALS IN O SUB2 IS LOWER THAN IN VACUO; THE RELATIVE INTENSITY OF THE BROAD SIGNAL IS ALSO LOWER. EVIDENTLY THE ORIGINAL CATION RADICAL RESULTS FROM THE LOSS OF AN ELECTRON FROM THE O OF THE CO GROUP AND THESE ELECTRONS ARE CAPTURED BY THE MEDIUM. H TRANSFER TO THIS O ATOM RESULTS IN CATIONS SUCH AS RC PRIMEPOSITIVE HEOH OR CATION RADICALS SUCH AS RC PRIMEPOSITIVE (OH)CH SUB2., WHICH UNDERGO THE USUAL EXPECTED CHANGES. A PULSE TECHNIQUE WAS USED FOR ELECTRON IRRADN. AND OPTICAL SPECTRA OF TYPICAL IRRADIATED KETONES ARE SHOWN. ALL GAVE MAX, IN THE 330-40 NM REGION 50 MUSEC AFTER PULSING. THE YIELDS OF ALCS. AT 77-300DEGREESK ARE TABULATED FOR THE ME-PR, ME-BU, DI-ET, AND DI-BU KETONES. G VALUES ARE 0.3-0.8. FACILITY: INST. ELEKTROKHIM., MOSCOW, USSR.

UNCLASSIFIED

APPROVED FOR RELEASE: 08/09/2001 CIA-RDP86-00513R002201520002-7"

"APPROVED FOR RELEASE: 08/09/2001 CIA-RDP86-00513R002201520002-7

Acc. Nr: AA0108164

Ref. Code: UR 0482

Abstracting Service:

Soviet Inventions Illustrated, Section I Chemical, Derwent, 1-70

228260 TRIMMING SEAMS FROM PLASTIC MOULDINGS, using a machine which moves with a reciprocating motion and incorporates cutting tools; in the improved design, the cutting is done with replaceable knives spring-mounted on two arms, which are hinged-connected to the main body section. Both soft and hard plastics can be treated in this machine (e.g. thermoplastics of most grades). The diagram shows the appliance, with a body section (1) in the lower part of which is the pusher-rod (2) and spring (3), with the upper part formed as the shaft (4) for insertion into the machinery which removes the 'flash' from the mouldings, and which imparts the reciprocatory motion. The pivot (5) forms the working hinge for the two arms (7) held apart by the compression spring (6). The cutters are fixed by the screws (8). The faces of the replaceable tools (9) are either scored in the same way as a file is made, or else they are covered with grains of hard refractory abrasives. 24.5.67. as 1158709/23-5. ROSTIN, A.P. (3.6.69) Bul. 31/8.10.68. Class 39a^2 Int. Cl. B 29c.

1/2

7

REEL/FRAME

19891827

APPROVED FOR RELEASE: 08/09/2001 CIA-RDP86-00513R002201520002-7"

"APPROVED FOR RELEASE: 08/09/2001 CIA-RDP86-00513R002201520002-7

AA0108164

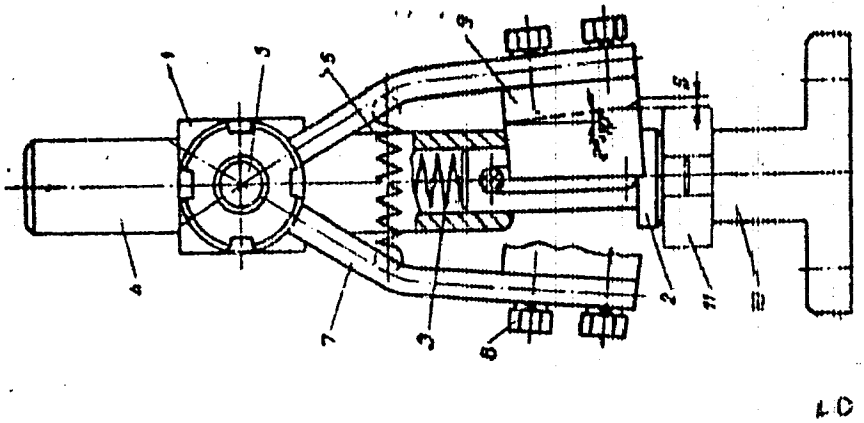

2/2

19891828

APPROVED FOR RELEASE: 08/09/2001 CIA-RDP86-00513R002201520002-7"

"APPROVED FOR RELEASE: 08/09/2001 CIA-RDP86-00513R002201520002-7

USSR

KOSTIN, A. Ye.

"Division of a Finite Set of Points into "Natural" Groups"

Avtomat. Sistemy Optimal'n. upr. Tekhnol. Protsessami [Automatic Systems for Optimal Control of Technological Processes -- Collection of Works], No 3, Tula, 1972, pp 196-209 (Translated from Referativnyy Zhurnal, Kibernetika, No 3, Moscow, 1973, Abstract No 3 V703 by the author).

Translation: One rather simple algorithm for subdivision of a finite set of points (elements) in a metric space is suggested and described, on the condition that the points included in the set form so-called "natural" groups. "Natural" here refers to a group for which the similarity of any element in the group with at least one other element is much greater than the similarity of the element with any element of any "foreign" group. The algorithm is convenient to use in the process of automation of the representation of large, well-differentiated files of data in compact form. 15 Biblio. Refs. Author's View.

1/1

APPROVED FOR RELEASE: 08/09/2001 CIA-RDP86-00513R002201520002-7"

"APPROVED FOR RELEASE: 08/09/2001 CIA-RDP86-00513R002201520002-7

USSR UDC: 51:155.001.57:681.3.06

KOSTIN, A. Ye.

"Sequential Construction of a Piecewise-Linear Separating Boundary in the Problem of Pattern Classification"

V sb. Avtomat. sistemy optimal'n. upr. tekhnol. protsessami (Automatic Systems for Optimum Control of Technological Processes--collection of works), vyp. 2, Tula, 1970, pp 144-152 (from RZh-Kibernetika, No 9, Sep 71, Abstract No 9V623)

Translation: The author considers the problem of approximating the optimum separating boundary which divides an aggregate of images of different classes in a space of characteristics by some linear resolving function. It is noted that the separating boundary found in accordance with the Bayes strategem is optimum from the standpoint of the minimum average risk; however, finding this boundary involves appreciable limitations, which make it difficult to use this procedure in practice. The described piecewise-linear method of finding the separating boundary is considered more feasible.

1/1

APPROVED FOR RELEASE: 08/09/2001 CIA-RDP86-00513R002201520002-7"

"APPROVED FOR RELEASE: 08/09/2001 CIA-RDP86-00513R002201520002-7

USSR UDC 617-089.843-06:616-021.2

VISHNEVSKIY, A. A., KOLESNIKOV, I. S., BALLYUZEK, F. V., PORTNOY, V. F., KOSTIN, E. D., PECHERSKIY, V. I., KOLOMIYETS, S. G., and KHUNDANOV, L. L., Institute of Surgery imeni A. V. Vishnevskiy Academy of Medical Sciences USSR, and Hospital Surgery Clinic Military Medical Academy imeni S. M. Kirov

"Causes of Early Functional Incompetence of Allotransplants"

Moscow, Eksperimental'naya Khirurgiya i Anesteziologiya, Vol 1, Jan/Feb 71, pp 3-8

Abstract: Causes and effects in postoperative developments were analyzed, which enabled us to systematize the factors responsible for early functional incompetence of a transplanted organ. Factors in four etiological categories were considered: 1. Organization and Tactics: each of availability of funds for establishing transplantation centers; lack of the required equipment, instruments, and drugs; absence of a central list of potential recipients; and inadequate cooperation between transplantation surgeons and reanimation specialists.

1/2

APPROVED FOR RELEASE: 08/09/2001 CIA-RDP86-00513R002201520002-7"

"APPROVED FOR RELEASE: 08/09/2001 CIA-RDP86-00513R002201520002-7

USSR

VISHNEVSKIY, A. A., et al., Eksperimental'naya Khirurgiya i Anesteziologiya, Vol 1, Jan/Feb 71, pp 3-8

2. Physiological Anatomy: poor estimation of the anatomical and physiological reserves of the transplant; and shortcomings in surgical techniques. 3. Pathophysiology: deteriorated state of the recipient; poor health of the donor; injury to the transplant; excessive functional load on the transplant; and inadequate prevention of operative and postoperative complications. 4. Immunobiology: poor matching of donor and recipient; high immunological potential in the recipient; inadequate prevention of stimulation of immunological reactions in the recipient; and mistakes committed in immunosuppressive therapy.

2/2

APPROVED FOR RELEASE: 08/09/2001 CIA-RDP86-00513R002201520002-7"

"APPROVED FOR RELEASE: 08/09/2001 CIA-RDP86-00513R002201520002-7

1/2 023 UNCLASSIFIED PROCESSING DATE--11SEP70

TITLE--ELECTRON PARAMAGNETIC RESONANCE OF PRODUCTS FROM THE SULFURIZING OF POLYMERS CONTAINING BENZENE RINGS IN THE CHAIN -U-

AUTHOR--GLUKHOVSKOY, V.S., KOSTIN, E.S., YUKELSON, I.I.

K

COUNTRY OF INFO--USSR

SOURCE--VYZOKOMOL. SOEDIN. SER. B 1970, 12(2), 136-9

DATE PUBLISHED--------70

SUBJECT AREAS--CHEMISTRY

TOPIC TAGS--ELECTRON PARAMAGNETIC RESONANCE, POLYMER, BENZENE DERIVATIVE, SULFIDE, EPR SPECTRUM

CONTROL MARKING--NO RESTRICTIONS

DOCUMENT CLASS--UNCLASSIFIED

PROXY REEL/FRAME--1989/0226 STEP NO--UR/0460/70/012/002/0136/0139

CIRC ACCESSION NO--AP0106982

UNCLASSIFIED

APPROVED FOR RELEASE: 08/09/2001 CIA-RDP86-00513R002201520002-7"

"APPROVED FOR RELEASE: 08/09/2001 CIA-RDP86-00513R002201520002-7

2/2 023 UNCLASSIFIED PROCESSING DATE--11SEP70

CIRC ACCESSION NO--AP0106882

ABSTRACT/EXTRACT--(U) GP-0- ABSTRACT. THE EPR SPECTRA AND THE CONCN. OF PARAMAGNETIC PARTICLES IN THE PRODUCTS FORMED BY REACTION OF POLY(1,3-DIMETHYLPHENYLENE SULFIDE) (I) WITH S WERE STUDIED. THE SULFURIZING OF I UNDER AR LED TO THE EVOLUTION H SUB2 S AND THE FORMATION OF A SOLID, DARK RED PRODUCT. THE REACTION OF I WITH S REQUIRED MORE DRASTIC CONDITION THAN DID POLY(ARYLENEALKYLS), PRESUMABLY DUE TO THE LOWER MOBILITY OF H ATOMS IN THE RESONANCE STABILIZED ME GROUPS. THE REACTION PRODUCTS OF I WITH S GAVE ASYM. EPR SPECTRA, ASSIGNED TO II RADICALS FORMED DURING (SHOWN ON MICROF(CHE) EARLY STAGES OF SULFURIZING, WHILE III RADICALS WERE PRIMARILY FORMED WHEN THE S CONTENT WAS NEARLY EXHAUSTED.

UNCLASSIFIED

APPROVED FOR RELEASE: 08/09/2001 CIA-RDP86-00513R002201520002-7"

"APPROVED FOR RELEASE: 08/09/2001 CIA-RDP86-00513R002201520002-7

USSR UDC 621.315.592

UFIMTSEV, V.B., SHUMILIN, V.P., KOSTIN, G.V., KRESTOVNIKOV, A.N.

"Concerning The Character Of The Change Of Composition Of The Vapor Phase Above Type $A^{III}B^{V}$ Compounds"

Sb.nauch.tr.po probl. mikroelektron. Mosk. in-ta elektron. tekhn. (Collection Of Scientific Works On Problems Of Microelectronics. Moscow Institute Of Electronics Technology), 1972, Issue 8, pp 131-136 (from RZh:Elektronika i yeye primeneniye, No 9, Sept 1972, Abstract No 9B100)

Translation: The paper considers the inverse character of the vapor phase during replacement of the condensate of the element B^{V} by the condensate of the compounds $A^{III}B^{V}$. From thermodynamic data the temperature dependences are calculated of the vapor pressure of 2- and 4-atom molecules of component B^{V} above the six compounds: InSb, GaSb, InAs, GaAs, InP, and GaP. Calculations are made for the reactions

$$A^{III}B^{V}_{cond} \rightleftharpoons A^{III}_{cond} + \frac{1}{n} B^{V}_{n\ gas}.$$

1/2

APPROVED FOR RELEASE: 08/09/2001 CIA-RDP86-00513R002201520002-7"

"APPROVED FOR RELEASE: 08/09/2001 CIA-RDP86-00513R002201520002-7

1/2 026 UNCLASSIFIED PROCESSING DATE--27NOV70

TITLE--INVERSION OF VAPOR PHASE COMPOSITION OVER A PRIMEIII B PRIMEV TYPE SEMICONDUCTOR COMPOUNDS -U-

AUTHOR-(04)-UFIMTSEV, V.B., KRESTOVNIKOV, A.N., KOSTIN, G.V., SHUMILIN, V.P.

COUNTRY OF INFO--USSR

SOURCE--ZH. FIZ. KHIM. 1970, 44(5), 1360

DATE PUBLISHED--------70

SUBJECT AREAS--PHYSICS

TOPIC TAGS--SEMICONDUCTOR MATERIAL, INDIUM, GALLIUM, ANTIMONY, ARSENIC, PHOSPHORUS, VAPOR STATE, PHASE COMPOSITION

CONTROL MARKING--NO RESTRICTIONS

DOCUMENT CLASS--UNCLASSIFIED

PROXY REEL/FRAME--3007/0890 STEP NO--UR/0076/70/044/005/1360/1360

CIRC ACCESSION NO--AP0136324

UNCLASSIFIED

APPROVED FOR RELEASE: 08/09/2001 CIA-RDP86-00513R002201520002-7"

"APPROVED FOR RELEASE: 08/09/2001 CIA-RDP86-00513R002201520002-7

2/2 026 UNCLASSIFIED PROCESSING DATE--27NOV70

CIRC ACCESSION NO--AP0136324

ABSTRACT/EXTRACT--(U) GP-0- ABSTRACT. EQUIL. VAPOR PRESSURES OF B SUB2 PRIMEV AND B SUB4 PRIMEV OVER A PRIMEIII B PRIMEV SOLIDS WERE CALCD. FROM KNOWN THERMODYNAMIC PROPERTIES AND CORRELATED BY THE EQUATION LOG P EQUALS MINUS (A-T) PLUS B FOR A PRIMEIII EQUALS IN OR GA AND B PRIMEV EQUALS SB, AS, OR P. THE VALUES OF A ARE GREATER FOR B SUB4 THAN FOR B SUB2 OVER A PRIMEIII B PRIMEV WHILE WITH PURE SOLID B, THE REVERSE IS TRUE. FACILITY: MOSK. TEKHNOL. INST. STALI SPLAVOV, MOSCOW, USSR.

UNCLASSIFIED

APPROVED FOR RELEASE: 08/09/2001 CIA-RDP86-00513R002201520002-7"

"APPROVED FOR RELEASE: 08/09/2001 CIA-RDP86-00513R002201520002-7

USSR

UDC 69.058.8:627.8.084.12

KHESIN, G. L., Doctor of Technical Sciences and KOSTIN, I. Kh., DMOKHOVSKIY, A. V. and YURENEVA, Ye. V., Candidates of Technical Sciences

"Study of Stresses from Dynamic Effects in Models of Water Engineering Structures by the Method of Photoelasticity"

Moscow, Gidrotekhnicheskoye Stroitel'stvo, No 1, Jan. 1975, pp 23-29.

Abstract: Studies performed by the method of dynamic photoelasticity of the stress state of models of certain water engineering structures under the influence of dynamic loads are described. The method of investigation is briefly described. Conditions of similarity are presented for construction of models, methods of creation of dynamic loads in models are analyzed, plus problems of recording of the wave picture and interpretation of experimental data. Results are presented from studies performed by the method of dynamic photoelasticity and a table is presented illustrating the solution of engineering problems by this method.

1/1

APPROVED FOR RELEASE: 08/09/2001 CIA-RDP86-00513R002201520002-7"

"APPROVED FOR RELEASE: 08/09/2001 CIA-RDP86-00513R002201520002-7

USSR

STRELCHUK, N. A., KHESIN, G. L., KOSTIN, I. KH., SHPYAKIN, V. N., MARSHAK, YU. I.

"Studies of Stresses in Tunnels by the Polarization Optical Method and Under Natural Conditions Under the Effect of an Explosive Load"

Sb. tr. Mosk. inzh. stroit. in-t (Collected Works of the Moscow Construction Engineering Institute), 1970, No 73, pp 53-63 (from RZh-Mekhanika, No 11, Nov 70, Abstract No 11V834)

Translation: The stressed state of the hydrotechnical tunnels of the Toktogul GES /Hydroelectric Power Plant/ and the Alma-Ata siltproof dam occurring when exploding charges during their construction was investigated in two-dimensional models. The scales of geometric similarity were (2.5-6)·10³. The complex shape of the day surface led to multiple application of the incident and reflected waves. The stresses in the outline of the tunnels were determined by pictures of the interference bands from the condition of similarity of the wave field in nature and in the model using known theoretical and empirical relations.

1/2

APPROVED FOR RELEASE: 08/09/2001 CIA-RDP86-00513R002201520002-7"

"APPROVED FOR RELEASE: 08/09/2001 CIA-RDP86-00513R002201520002-7

USSR

STRELCHUK, N. A., et al, Sb. tr. Mosk. inzh. stroit. in-t, 1970, No 73, pp 53-63

The problem was solved under the assumption of elasticity anisotropy of the material in nature (limestone) and the model (ED5-MTGFA). For the characteristic times corresponding to the effect of different waves in the tunnel, stress-strain diagrams of the expected maximum outline stresses are presented. A comparison of the results obtained using the model and natural measurements is presented for the Alma-Ata Dam. The bibliography has 9 entries.

2/2

APPROVED FOR RELEASE: 08/09/2001 CIA-RDP86-00513R002201520002-7"

"APPROVED FOR RELEASE: 08/09/2001 CIA-RDP86-00513R002201520002-7

USSR UDC 621.314.61

KULIKOV, A.A., KOSTIN, N.A., BERNAT, R.K., BONDAR', K.I.

"Reversable Thyristor Converter For Galvanizing Electric And Diesel Locomotive Parts By The Method Of Reversed Current"

Materialy Yubileyn. nauchno-tekhn. konferentsii Dnepropetr. in-ta inzh. zh.-d.transp. (Materials Of The Jubilee Scientific-Technical Conference Of The Dnepropetrovsk Institute Of Railroad Transportation Engineers), Dnepropetrovsk, 1970, pp 67-68 (from RZh--Elektronika i yeye primeneniye, No 11, November 1970, Abstract No 11B442)

Translation: A single-phase two half-cycle rectifier circuit lies at the base of the converter. The thyristors are phase controlled by the phase shifter bridge method and an amplifier using transistors, which is simultaneously a generator of control pulses. A multivibrator is used to obtain the reversed current, the duration of the output pulses of which determines the flow time of the forward and reverse currents. A.T.

1/1

APPROVED FOR RELEASE: 08/09/2001 CIA-RDP86-00513R002201520002-7"

"APPROVED FOR RELEASE: 08/09/2001 CIA-RDP86-00513R002201520002-7

USSR UDC 621.375.82

BONCH-BRUYEVICH, A. M., KOSTIN, N. N., PRZHIBEL'SKIY, S. G., KHODOVOY, V. A., KHROMOV, V. V., CHIGIR', N. A.

"Resonance Nonlinear Phenomena in Elementary Noninteracting Systems"

V sb. Nelineyn. protsessy v optike. (Nonlinear Processes in Optics--collection of works), Vyp. 2, Novosibirsk, 1972, pp 75-95 (from RZh-Fizika, No 12, Dec 72, Abstract No 12D861)

Translation: A study was made of nonlinear phenomena in sets of elementary noninteracting systems under the effect of powerful radiation as a function of its spectral composition. The displacement and splitting of the D-absorption lines of the chief doublet of the K atom in the radiation field of a ruby laser were investigated experimentally. Nonlinear phenomena were detected in connection with the variation of the refraction coefficients of the atomic vapors of Rb and K in a laser radiation field with a broad spectrum ($\Delta\lambda = 10$ nm) (the variation of the polarization, focusing, and defocusing of the radiation passing through the vapor, induced parametric scattering). Intense directional radiation was observed in a number of transitions of the Rb atom on excitation by a laser in a pigment ($\lambda = 775-795$ nm). The phenomenon of nonlinear population of the excited states of the K and Rb molecules with nonuniformly broadened absorption bands was detected and investigated.

1/2

APPROVED FOR RELEASE: 08/09/2001 CIA-RDP86-00513R002201520002-7"

"APPROVED FOR RELEASE: 08/09/2001 CIA-RDP86-00513R002201520002-7

USSR

BONCH-BRUYEVICH, A. M., et al., Nelineyn. protsessy v optike. (Nonlinear Processes in Optics--collection of works), Vyp. 2, Novosibirsk, 1972, pp 75-95

A study was made of the saturation kinetics of the absorption in red bands of Rb molecules under the effect of ruby laser radiation. It was established that the absorption decreases uniformly along the entire band and is restored within $2 \cdot 10^{-2}$ seconds. These phenomena are explained by dissociation and reduction of the Rb molecules. The results of all of the experiments were compared with the theoretical calculations. The bibliography has 10 entries.

2/2

APPROVED FOR RELEASE: 08/09/2001 CIA-RDP86-00513R002201520002-7"

"APPROVED FOR RELEASE: 08/09/2001 CIA-RDP86-00513R002201520002-7

CARIL

BIBLIOGRAPHIC DATA SHEET

1. Report No. JPRS 59611

2.

3. Recipient's Accession No.

4. Title: LOMO VK-1/2 TYPE SMALL VIDEO TAPE RECORDER

5. Report Date: 25 July 1973

6.

7. Author: M. G. Chul'man, V. A. Kostin, Ye. M. Nikonov, et al.

8. Performing Organization Rept. No.

9. Author's Name and Address: Joint Publications Research Service, 1000 North Glebe Road, Arlington, Virginia 22201 Recording Device, [redacted]

10. Project Task Work Unit No.

11. Contract Grant No.

12. Sponsoring Organization Name and Address: As above

13. Type of Report & Period Covered

14.

15. Supplementary Notes: TYKHNIKA KINO I TELEVIDENIYA, No 1, 1972, Moscow

16. Abstracts: The report contains a description of the LOMO VK-1/2 type video tape recorder.

17. Key Words and Document Analysis. 17a. Descriptors:

USSR
Methods and Equipment
Recording Devices
Video Tape Recorder

17b. Identifiers/Open-Ended Terms

17c. COSATI Field/Group: 14C

18. Availability Statement: Unlimited Availability
Sold by NTIS
Springfield, Virginia 22151

19. Security Class (This Report): UNCLASSIFIED

20. Security Class (This Page): UNCLASSIFIED

21. No. of Pages: 13

22. Price

THIS FORM MAY BE REPRODUCED

KOSTIN, V. A.

Recording devices

APPROVED FOR RELEASE: 08/09/2001 CIA-RDP86-00513R002201520002-7"

"APPROVED FOR RELEASE: 08/09/2001 CIA-RDP86-00513R002201520002-7

USSR UDC 51

GADALOV, V. V., KOSTIN, V. B., and DUNAYTSEVA, G. V.

"Optimizing the Process of Developing Electronic Circuits With Tie-Ins to Cost, Time, and Technical Parameters"

V sb. Probl. sistemotekhniki (Problems in System Engineering--collection of works) "Sudostroyeniye," 1972, pp 65-76 (from RZh--Matematika, No 10, 1972, Abstract No 10V603)

Translation: The problem reduces to a linear programming problem with two-sided limits on the variables.

1/1

APPROVED FOR RELEASE: 08/09/2001 CIA-RDP86-00513R002201520002-7"

"APPROVED FOR RELEASE: 08/09/2001 CIA-RDP86-00513R002201520002-7

USSR UDC: 51:621.391

GADALOV, V. V., KOSTIN, V. B., DUNAYTSEVA, G. V.

"Concerning the Problem of Optimizing the Process of Developing Radio Electronic Systems With Coordination of Cost, Time and Engineering Parameters"

Probl. sistemotekhniki--sbornik (Problems of Systems Analysis--collection of works), vyp. 1, n.p., "Sudostroyeniye", 1972, pp 65-76 (from RZh-Kibernetika, No 10, Oct 72, abstract No 10V603)

Translation: The problem is reduced to a problem in linear programming with bilateral restrictions on the variables.

1/1

APPROVED FOR RELEASE: 08/09/2001 CIA-RDP86-00513R002201520002-7"

"APPROVED FOR RELEASE: 08/09/2001 CIA-RDP86-00513R002201520002-7

USSR

IVANOV, Ye. M., KOSTIN, V. I.

"Dynamic Calibration of Tensometric Apparatus with Potentiometric Connection of the Sensor"

Tr. Kuybyshev. Aviats, In-t [Works of Kuybyshev Institute of Aviation], 1972, No 51, pp 193-199 (Translated from Referativnyy Zhurnal Metrologiya i Izmeritel'naya Tekhnika, No 4, 1973, Abstract No 4.32.402).

Translation: It is noted that under conditions of mass tensometric testing, the method of dynamic calibration (C) of tensometric apparatus using an audio-frequency generator has significant advantages over dynamic calibration using a calibration beam, since: the time required for preparation, performance and analysis of C is greatly reduced; expensive special devices are not needed for C; the accuracy and reliability of C are increased; C is performed simultaneously with the experiments and at the required frequency; it is no longer necessary to consider the resistance of the potentiometric circuit when interpreting the results of C; the electrical circuit for C can be constructed so that the numerical value of the assigned generator voltage is equal to the numerical value of the assigned "fictitious" deformation. 2 figures.
1/1

APPROVED FOR RELEASE: 08/09/2001 CIA-RDP86-00513R002201520002-7"

"APPROVED FOR RELEASE: 08/09/2001 CIA-RDP86-00513R002201520002-7

1/2 007 UNCLASSIFIED PROCESSING DATE--11SEP70

TITLE--REMOVAL OF DROPLETS FROM VAPOR IN AN EMULSION COLUMN -U-

AUTHOR--KOSTIN, V.M., ROZEN, A.M.

COUNTRY OF INFO--USSR

SOURCE--KHIM. PROM. (MOSCOW) 1970, 46(1) 47-9

DATE PUBLISHED--------70

SUBJECT AREAS--CHEMISTRY

TOPIC TAGS--CHEMICAL LABORATORY APPARATUS, EMULSION, CHEMICAL PURIFICATION

CONTROL MARKING--NO RESTRICTIONS

DOCUMENT CLASS--UNCLASSIFIED

PROXY REEL/FRAME--1989/0190 STEP NO--UR/0064/70/046/001/0047/0049

CIRC ACCESSION NO--AP0106846

UNCLASSIFIED

APPROVED FOR RELEASE: 08/09/2001 CIA-RDP86-00513R002201520002-7"

"APPROVED FOR RELEASE: 08/09/2001 CIA-RDP86-00513R002201520002-7

2/2 007 UNCLASSIFIED PROCESSING DATE--11SEP70

CIRC ACCESSION NO--AP0106846

ABSTRACT/EXTRACT--(U) GP-0- ABSTRACT. IN THE REMOVAL OF LIQ. DROPLETS FROM VAPORS IN A PACKED (WITH RASCHIG RINGS) EMULSION COLUMN, THE REMOVAL COEFF. K DEPENDED TO A VERY LITTLE EXTENT ON THE REFLUX RATIO; K RANGED BETWEEN 10 AND 400, AND LOG K INCREASED LINEARLY WHEN THE HEIGHT OF THE PACKING WAS INCREASED FROM 0.4 TO 1.4 M. THE HYDRAULIC RESISTANCE WAS A LINEAR FUNCTION OF THE HEIGHT OF THE PACKING. IN COMPARISON WITH A TRAY COLUMN, THE EMULSION COLUMN PROVIDED THE SAME DEGREE OF PURIFICATION WHILE REQUIRING ABOUT HALF THE TRAY COLUMN HEIGHT.

UNCLASSIFIED

APPROVED FOR RELEASE: 08/09/2001 CIA-RDP86-00513R002201520002-7"

"APPROVED FOR RELEASE: 08/09/2001 CIA-RDP86-00513R002201520002-7

UDC 629.7.036.54

USSR

TISHIN, A. P., KHUDYAKOV, V. A., KOSTIN, V. N.

"On the Retention of Condensate Particle Crystallization in the Nozzle of a Jet Engine"

Kazan', Izvestiya vysshikh uchebnykh zavedeniy - Aviatsionnaya tekhnika, No. 2, 1971, pp 24-31

Abstract: The effect of crystallization retention of condensate particles in the nozzle on the power characteristics of a jet engine are discussed. It is noted that in the standard technique for calculating the thermodynamic characteristics of rocket fuels, it is assumed that the expansion process in the nozzle is an equilibrium process. For fuels with two-phase combustion products this indicates that under expansion the temperature and rate of the particles and the gas are equal and the condensate as it cools in the nozzle passes uniformly through phase states. For example, the combustion products of solid fuels with Al additives contain 15-35% condensed aluminum oxide which has a melting point of 2303°K. The combustion temperature of these fuels is 3000-3500°K and the temperature of products at the cutoff of the nozzle is 1500-2000°K. The aluminum oxide particles in the combustion chamber are in the cold state according to an equilibrium thermodynamic calculation; the temperature of the products reaches 2303°K upon expansion in a certain cross section of the nozzle. The expansion process subsequently occurs isothermally until the

1/2

APPROVED FOR RELEASE: 08/09/2001 CIA-RDP86-00513R002201520002-7"

"APPROVED FOR RELEASE: 08/09/2001 CIA-RDP86-00513R002201520002-7

USSR

TISHIN, A. P., et al, Izvestiya vysshikh uchebnykh zavedeniy - Aviatsionnaya tekhnika, No. 2, 1971, pp 24-31

heat of aluminum oxide crystallization is transformed into kinetic energy. In this section of the nozzle the condensate gradually transforms from the liquid to the solid state as heat is transferred to the gas. In each cross section the amount of hardened concentrate is equal to the amount of heat of crystallization removed. In the actual case the equilibrium process may be limited, first by the finite rate of crystallization and second by the finite rate of heat transfer from particles to the gas. Results of an approximate thermodynamic calculation and of special thermodynamic calculations of two compositions with 7 and 15% aluminum are given for determining the relative effectiveness of the expansion process in the absence of crystallization. Also given are the results of calculations of known equilibrium flows of two-phase combustion products of a composition with 15% Al for the study of the effect of the rate of heat exchange between particles in the gas on the crystallization process. It is shown that in a real case the phase transition heat may be achieved in the nozzle to a considerable degree only under suitable conditions of heat exchange between the particles and the gas.

2/2

APPROVED FOR RELEASE: 08/09/2001 CIA-RDP86-00513R002201520002-7"

"APPROVED FOR RELEASE: 08/09/2001 CIA-RDP86-00513R002201520002-7

1/2 018 UNCLASSIFIED PROCESSING DATE--02OCT70

TITLE--THE EXTRACTION OF USEFUL MINERALS FROM THE BOTTOM OF SEAS AND OCEANS -U-

AUTHOR-(05)-NUROK, G.A., KOSTIN, V.N., DRUYAKIN, YU.V., DUBIS, YU.V., NOLOCHNIKOV, L.N.

COUNTRY OF INFO--USSR

SOURCE--(DOBYCHA POLEZNYKH ISKOPAYEMYKH SO DNA MOREY I OKEANOV) MOSCOW, NEDRA, 1970, 238 PP

DATE PUBLISHED--------70

SUBJECT AREAS--EARTH SCIENCES AND OCEANOGRAPHY, MATERIALS

TOPIC TAGS--GOLD, TIN, TITANIUM, DIAMOND, MINERAL, OCEAN BOTTOM

CONTROL MARKING--NO RESTRICTIONS

DOCUMENT CLASS--UNCLASSIFIED

PROXY REEL/FRAME--1993/1983 STEP NO--UR/0000/70/000/000/0001/0238

CIRC ACCESSION NO--AM0114384

UNCLASSIFIED

APPROVED FOR RELEASE: 08/09/2001 CIA-RDP86-00513R002201520002-7"

"APPROVED FOR RELEASE: 08/09/2001 CIA-RDP86-00513R002201520002-7

2/2 018 UNCLASSIFIED PROCESSING DATE--02DEC70

CIRC ACCESSION NO--AM0114334

ABSTRACT/EXTRACT--(U) GP-0- ABSTRACT. TABLE OF CONTENTS: INTRODUCTION 3. CHAPTER I USEFUL MINERALS OF SEAS AND OCEANS 8. CHAPTER II PROSPECTING AND SAMPLING UNDERWATER ALLUVIAL DEPOSITS 40. CHAPTER III THE TECHNOLOGY OF UNDERWATER EXPLOITATION OF DEPOSITS OF USEFUL MINERALS FROM THE BOTTOM OF SEAS AND OCEANS 71. CHAPTER IV TECHNICAL MEANS FOR THE EXTRACTION OF USEFUL MINERALS FROM THE BOTTOM OF SEAS AND OCEANS 142. CHAPTER V ENRICHMENT OF SEA SANDS OF USEFUL MINERALS 205. CHAPTER VI TASKS AND WAYS TO SOLVE THE PROBLEM OF UNDERWATER EXTRACTION OF USEFUL MINERALS IN THE USSR 233. LITERATURE 237. GIVEN ARE: A GEOLOGICAL CHARACTERISTIC OF SEA ALLUVIAL DEPOSITS, METHODS OF PROSPECTING AND SAMPLING THESE DEPOSITS; INFORMATION IS GIVEN ON THEIR PRESENCE IN SEAS AND OCEANS AND THE RECOVERABILITY AFTER CONDUCTING EXPLOITATION WORK. CITED ARE DATA ON THE TECHNOLOGY OF UNDERWATER EXTRACTION OF GOLD, TIN, TITANIUM CONTAINING AND MAGNETITE SANDS, DIAMONDS AND OTHER USEFUL MINERALS. GIVEN ARE ECONOMIC RESULTS OF UNDERWATER EXTRACTION AND METHODS TO DETERMINE THE ECONOMIC EFFECTIVENESS AND ALSO THE DIRECTION OF THE DEVELOPMENT OF THIS TECHNOLOGY.

UNCLASSIFIED

APPROVED FOR RELEASE: 08/09/2001 CIA-RDP86-00513R002201520002-7"

"APPROVED FOR RELEASE: 08/09/2001 CIA-RDP86-00513R002201520002-7

USSR

BELOUS, V. V., KOSTIN, V. N. (Khar'kov State University)

"Investigation of the Development of a High-Voltage Pulsed Discharge in Long Tubes at the Shaping Stage"

Tomsk, Izvestiya Vysshikh Uchebnykh Zavedeniy, Fizika, August, 1970, pp 128-33

ABSTRACT: On the basis of an analysis of oscillograms, voltage and photometric, for pulsed discharges in long tubes (d = 60-132 cm) in hydrogen it is shown that with an increase in pressure from 0.4 to 5 mm Hg and a decrease of the overvoltage from 290% to 90% the "step" current I_{st} decreases and the times t_p, t_{st}, and t_ϕ, characterizing the shaping stage, increase. This makes it possible to assume that a "step" is formed as the result of the transition of an avalanche-streamer maximum at the beginning of the shaping stage to a cathode-directed streamer. In the experiments discussed pd ≈ 300 mm Hg·cm, corresponding to this transitional discharge mechanism.

The article includes 4 figures and 2 tables. There are 6 references.

1/1

APPROVED FOR RELEASE: 08/09/2001 CIA-RDP86-00513R002201520002-7"

"APPROVED FOR RELEASE: 08/09/2001 CIA-RDP86-00513R002201520002-7

1/1

USSR UDC 621.373.826:550.3

ARSHINOV, Yu. F., DONCHENKO, V. A., ZUYEV, V. Ye., KOSTIN, V. V., and SAMOKHVALOV, I. V.

"Propagation of Laser Radiation for λ = 2.36 Microns in Artificial Dispersing Media"

Moscow, V sb. X Vses. konf. po rasprostr. radiovoln. Tezisy dokl. (Tenth All-Union Conference on the Propagation of Radio Waves; Report Theses--collection of works) "Nauka," 1972, pp 157-161 (from RZh--Radiotekhnika, No 10, 1972, Abstract 10D439)

Translation: Results are given of a study of the attenuation and inverse scattering of the radiation from a laser using $CaF_2:Dy^{2+}$ (λ = 2.36μ) and He-Ne mixture (λ = 0.63μ) in a medium simulating some types of natural clouds, fogs, and wood smoke. Bibliography of five. A. L.

1/1

APPROVED FOR RELEASE: 08/09/2001 CIA-RDP86-00513R002201520002-7"

"APPROVED FOR RELEASE: 08/09/2001 CIA-RDP86-00513R002201520002-7

USSR UDC 621.373.826:550.3

ZUYEV, V. Ye., KOSTIN, V. V., MARICHEV, V. N., and SOSNIN, A. V.

"Propagation of Laser Radiation of 2.36 Micron Wavelength in the Atmosphere"

Moscow, V sb. X Vses. konf. po rasprostr. radiovoln. Tezisy dokl. (Tenth All-Union Conference on the Propagation of Radio Waves; Report Theses--collection of works) "Nauka," 1972, pp 162-164 (from RZh--Radiotekhnika, No 10, 1972, Abstract No 10D442)

Translation: Results are given of measurements of the attenuation of a laser with $\lambda = 2.36\ \mu$ (the laser using $Ca,F_2:Dy^{2+}$) under complex meteorological conditions. It is shown that the dispersion by particles of atmospheric aerosol plays the decisive role. In several cases, the attenuation factor at $\lambda = 2.36\ \mu$ is greater than at $\lambda = 0.63\ \mu$. One table, bibliography of four. A. L.

1/1

APPROVED FOR RELEASE: 08/09/2001 CIA-RDP86-00513R002201520002-7"

"APPROVED FOR RELEASE: 08/09/2001 CIA-RDP86-00513R002201520002-7

USSR UDC 621.375.82

KOSTIN, V. V., NOVIK, V. K.

"Pyroelectric Device for Measuring the Energy Characteristics of Laser Radiation"

V sb. Impul's. fotometriya (Pulse Photometry -- Collection of Works), No. 2, Leningrad, "Mashinostroyeniye", 1972, pp 115-119 (from RZh-Fizika, No 10, Oct 72, Abstract No 10D1027)

Translation: A pyroelectric receiver for measuring the parameters of laser radiation pulses makes possible its application in the energy range from millijoules to tens of joules for pulse lengths from microseconds to tens of milliseconds. The energy discharge of a capacitor is used to calibrate the pyroreceiver. 7 ill., Authors abstract.

1/1

APPROVED FOR RELEASE: 08/09/2001 CIA-RDP86-00513R002201520002-7"

"APPROVED FOR RELEASE: 08/09/2001 CIA-RDP86-00513R002201520002-7

Acc. Nr. AP0046180 Abstracting Service: CHEMICAL ABST. 5/70 Ref. Code UR0065

91907b Alkaline removal of sulfur compounds and carbon dioxide from pyrolysis gas. Guseinova, Z. D.; Kuptin, V. V.; Savel'ev, Yu. V.; Sarkisyants, G. T. (USSR). *Khim. Tekhnol. Topl. Masel* 1970, 15(1), 31-2 (Russ). Pyrolysis gas contg. H 10.0, CH_4 25.2, C_2H_4 25.0, propylene 18.0, C_3H_8 2.4, C_4 and higher hydrocarbons 9.0%, H_2S ≤1500, org. S compds. 20 mg/m³, and CO_2 300 ppm was fed into a trap column 7 m high and 378 mm in diam. having 10 perforated trays. H_2S and part of the CO_2 were removed with 1.4-1.7 l. 2-4% NaOH soln./m³ at 40°. After leaving the top of the column, the gas was heated to 80° and fed into a similar packed column for complete removal of H_2S and CO_2 with 10 l. 5-8% NaOH soln./hr at 60-80°. The alk. solns. were changed after operating 1300-1500 hr. After purification, the pyrolysis gas was cooled and C_4 and higher hydrocarbons were sepd. The amts. of CO_2, H_2S, and org. S compds. were reduced to 6 ppm, traces, and 0.6 mg S/m³, resp. On decreasing the amt. of circulating alk. soln. to 0.7 l./m³ gas, the amts. of CO_2, H_2S, and org. S compds. were decreased to 18 ppm, 0.1 mg/m³, and 1.6 mg S/m³, resp. The polymn. was greatly decreased, excluding periodic cleaning of the app. The process is shown graphically. GGJR

REEL/FRAME
19781257

18

APPROVED FOR RELEASE: 08/09/2001 CIA-RDP86-00513R002201520002-7"

"APPROVED FOR RELEASE: 08/09/2001 CIA-RDP86-00513R002201520002-7

USSR UDC 621.385.632

KOSTIN, YU.A., YENIN, P.S., MALODITKO, A.P., MIKHEYEV, V.I.

"Securing Of Spiral Delay Line Of Vibration-Proof TWT"

Elektron. tekhnika. Nauchno-tekhn. sb. Elektron. SVCh (Electronic Technology. Scientific-Technical Collection. Microwave Electronics), 1970, Issue No 10, pp 101-108 (from RZh--Elektronika i yeye primeneniye, No 2, February 1971, Abstract No 2A181)

Translation: A stable, easily-controlled and checked method is developed for securing a delay line of the spiral type. Securing is accomplished by clinching [ossazhivaniye] the warmed-up glass for forming the bulb into the form of narrow bands. The glass is clinched under the influence of a jet of nitrogen heated to a high temperature. Evacuation of the bulb in the process of securing prevents oxidation of the spiral delay line, and use of an electrical furnace for overall heating and annealing of the bulb removes the emerging thermal stress. Summary.

1/1

APPROVED FOR RELEASE: 08/09/2001 CIA-RDP86-00513R002201520002-7"

"APPROVED FOR RELEASE: 08/09/2001 CIA-RDP86-00513R002201520002-7

Acc. Nr: AP0038118 K Ref. Code: UR 0326

PRIMARY SOURCE: Fiziologiya Rastenii, 1970, Vol 17, Nr 1, pp 169-173

DISTRIBUTION OF CHLORINE AND IODINE IN PLANTS

Portyanko, V. F.; Kostina, A. Ye.; Dulova, M. K.; Portyanko, V. V.
P. D. Osipenko Pedagogical Institute, Berdyansk

The distribution of chlorine and iodine among organs of oleaeagnus, grape, quince, poppy, sunflower and other plants was studied. Chlorine is found to be located primarily in the cortex, mature and old leaves and peduncle. Lowest amounts of chlorine are observed in young leaves, seeds and wood and other organs. On the contrary iodine is mainly concentrated in young organs such as the stamens, pistils, young leaves and seeds. In many organs an antagonism can be observed between the distribution of iodine and chlorine. Chlorine is distributed in leaves of various tiers in the basipetal direction whereas iodine is distributed in the acropetal direction.

1/1

REEL/FRAME
19731171

APPROVED FOR RELEASE: 08/09/2001 CIA-RDP86-00513R002201520002-7"

"APPROVED FOR RELEASE: 08/09/2001 CIA-RDP86-00513R002201520002-7

USSR UDC 620.193.01:669.248

IVANOV, YE. G., KOLOMYTSEV, P. T., and KOSTINA, L. A., Air Force Engineering Academy imeni N. Ye. Zhukovskiy

"On the Catastrophic Oxidation of Nickel Alloys"

Moscow, Zashchita Metallov, Vol 9, No 1, Jan-Feb 73, pp 80-82

Abstract: In order to explain the catastrophic oxidation of heat-resistant nickel alloys (KhN70VMFTYu (EI826), KhN55MTFKYu (EI929), and KhN51VMTYuKFR (EP220)), the composition and kinetics of sublimation of oxide sublimates produced was investigated. Molybdenum is shown to be the main component in the sublimate, its concentration increasing with rising oxidation temperature. The EP220 alloy was found to have the highest sublimation rate of oxides and the lowest heat resistance; the EI929 alloy had the lowest sublimation rate of oxides and the highest heat resistance. A possible sublimation mechanism is presented. The catastrophic pitted oxidation observed at temperatures over 1000° is combined with the development of liquid and gaseous oxides of molybdenum. Two figures, one table, four bibliographic references.

1/1

APPROVED FOR RELEASE: 08/09/2001 CIA-RDP86-00513R002201520002-7"

"APPROVED FOR RELEASE: 08/09/2001 CIA-RDP86-00513R002201520002-7

USSR

KOSTINA, M. A., KHRIPUN, M. S.

"Feier Processes and Approaches for Acceleration of Their Convergence"

Mat. Metody v Nekotor. Zadachakh Optimal'n. Planir. Vyp 3 [Mathematical Methods in Certain Problems of Optimal Planning, No 3 -- Collection of Works], Sverdlovsk, 1971, pp 45-54 (Translated from Referativnyy Zhurnal, Kibernetika, No 2, 1972, Abstract No 2 V556 from the Introduction).

Translation: Feier processes, as applicable to the problem of solution of systems of linear (and also convex) inequalities, refer to processes generated by M-Feier mappings. Suppose $M \subset R^n$ and $M = \emptyset$. The mapping $\phi: R^n \to R^n$ is called an M-Feier mapping, if $||\phi(x)-y|| < ||x-y||$ and $\phi(y) = y$ for all $y \in M$ and $x \notin M$. If set $M \neq \emptyset$ allows at least one M-Feier mapping, it is automatically convex and closed.

1/1

APPROVED FOR RELEASE: 08/09/2001 CIA-RDP86-00513R002201520002-7"

"APPROVED FOR RELEASE: 08/09/2001 CIA-RDP86-00513R002201520002-7

1/2 019 UNCLASSIFIED PROCESSING DATE--30OCT70

TITLE--ACTION OF ELECTROPHILIC AGENTS ON POLYFLUORO AROMATIC COMPOUNDS. III. SUBSTITUTION AND ADDITION REACTIONS DURING THE ACTION OF

AUTHOR-(04)-SHTEYNGARTS, V.D., OSINA, D.I., KOSTINA, N.G., YAKOBSON, G.G.

COUNTRY OF INFO--USSR

SOURCE--ZH.-ORG. KHIM. 1970, 6(4), 833-40

DATE PUBLISHED--------70

SUBJECT AREAS--CHEMISTRY

TOPIC TAGS--FLUORINATED ORGANIC COMPOUND, NAPHTHALENE, NITRATION, EXCHANGE REACTION, ORGANIC NITRO COMPOUND, NAPHTHOQUINONE

CONTROL MARKING--NO RESTRICTIONS

DOCUMENT CLASS--UNCLASSIFIED

PROXY REEL/FRAME--2000/2089 STEP NO--UR/0366/70/006/004/0833/0840

CIRC ACCESSION NO--AP0125676

UNCLASSIFIED

APPROVED FOR RELEASE: 08/09/2001 CIA-RDP86-00513R002201520002-7"

"APPROVED FOR RELEASE: 08/09/2001 CIA-RDP86-00513R002201520002-7

2/2 019 UNCLASSIFIED PROCESSING DATE--30OCT70

CIRC ACCESSION NO--AP0125676

ABSTRACT/EXTRACT--(U) GP-0- ABSTRACT. THE REACTION OF 2H,HEPTAFLUORONAPHTHALENE (I) WITH OLEUM, HSO SUB3 CL, (CLCH SUB2) SUB2 O IN HSO SUB3 CL SOLN., OR C SUB6 F SUB5 CH SUB2 CL IN HSO SUB3 CL SOLN. GAVE SOLELY 2,(R SUBSTITUTED) I DERIVS. (II) (R EQUALS SO SUB3 H, SO SUB2 CL, CH SUB2 CL, OR CH SUB2,C SUB6 F SUB5). THE REDN. OF II (R EQUALS CH SUB2 CL) WITH ZN-HCL GAVE II (R EQUALS ME). HOWEVER, THE NITRATION OF I GAVE 4,NITRO,3,4,5,6,7,8,HEXAFLUORO,1,OXO,1,4,DIHYDRONAPHTHALENE (III). THE REDN. OF III WITH ZN-HCL GAVE 3,4,5,6,7,8,HEXAFLUORO,1,HYDROXYNAPHTHALENE WHICH WAS CONVERTED WITH CH SUB2 N SUB2 TO ITS ME ETHER. HEATING III AT 800EGREES GAVE 2,5,6,7,8,PENTAFLUORO,1,4,NAPHTHOQUINONE. FACILITY: NOVOSIBIRSK. INST. ORG. KHIM., NOVOSIBIRSK, USSR.

UNCLASSIFIED

APPROVED FOR RELEASE: 08/09/2001 CIA-RDP86-00513R002201520002-7"

"APPROVED FOR RELEASE: 08/09/2001 CIA-RDP86-00513R002201520002-7

Automation

ROSTINA, N. I.

25 Apr 72 106 FTD: CYBERNETICS

93. USSR UDC 519.2:658.562

[illegible], N. I.

"Statistical Control of the Quality Indicators of a Process by Indirect Parameters"

Adaptivnyye Sistemy. Dol'shiye Sistemy. (Adaptive Systems. Large Systems), Moscow, Nauka, 1971, pp 177-183

Translation of abstract: The application of statistical methods for constructing a system of indirect control of qualitative indicators is considered. In this system the measurable indirect parameters and the desired qualitative indicators represent equilibrium random processes. Some recommendations are given for improving the accuracy of such control systems by taking dynamics into account. An example is given of the use of the general concepts in this article to develop a method of controlling the quality of synthetic rubber.

[illegible] Cybernetics

[illegible]

1/1

94. USSR Automation UDC 519.152

ROSTINA, N. I. and TARUTINSKIY, N. V.

"An Automatic Model of an Order Filling System"

Adaptivnyye Sistemy. Dol'shiye Sistemy. Adaptive Systems. Large Systems), Moscow, Nauka, 1971, 360-366

Translation of abstract: This article examines the design of a probability-automated model of an order filling system, in which goods arrive from one side and orders for these goods from the other, and the shipment of goods involves a time delay. The behavior of the model is simulated on an electronic computer.

1/1

APPROVED FOR RELEASE: 08/09/2001 CIA-RDP86-00513R002201520002-7"

"APPROVED FOR RELEASE: 08/09/2001 CIA-RDP86-00513R002201520002-7

1/2 017 UNCLASSIFIED PROCESSING DATE--16OCT70

TITLE--SOLUBILITY OF HYDROGEN IN SILICON -U-

AUTHOR-(03)-KOSTINA, T.K., BAUM, B.A., KUROCHKIN, K.T.

COUNTRY OF INFO--USSR

SOURCE--IZV. AKAD. NAUK SSSR, NEORG. MATER. 1970, 6(1), 117

DATE PUBLISHED-------70

SUBJECT AREAS--CHEMISTRY, MATERIALS

TOPIC TAGS--HYDROGEN, SOLUBILITY, SILICON, GAS CONTAINING METAL, METAL CONTAINING GAS

CONTROL MARKING--NO RESTRICTIONS

DOCUMENT CLASS--UNCLASSIFIED

PROXY REEL/FRAME--1996/0844 STEP NO--UR/0363/70/006/001/0117/0117

CIRC ACCESSION NO--AP0118020

UNCLASSIFIED

APPROVED FOR RELEASE: 08/09/2001 CIA-RDP86-00513R002201520002-7"

"APPROVED FOR RELEASE: 08/09/2001 CIA-RDP86-00513R002201520002-7

2/2 017 UNCLASSIFIED PROCESSING DATE--16OCT70

CIRC ACCESSION NO--AP0118020

ABSTRACT/EXTRACT--(U) GP-0- ABSTRACT. THE SOLY. OF HYDROGEN IN SI WAS DETD. BY USING THE HOT VOL. METHOD. THE H CONTENT IN SI AT THE M.P. AND AT 28 TORR IS 1.37 TIMES 10 PRIME NEGATIVE3 AT. PERCENT. IT WAS NOT POSSIBLE TO OBTAIN AN UNEQUIVOCAL ANSWER AS TO WHETHER THE SQUARE ROOT LAW IS FULFILLED. AT GREATER THAN 1200DEGREES, THE SOLY. DOES NOT EXCEED 0.099 TIMES 10 PRIME NEGATIVE2 AT. PERCENT (0.5 CM PRIME3-100 G).

FACILITY: URAL. POLITEKH. INST. IM. KIROVA, SVERDLOVSK, USSR.

UNCLASSIFIED

APPROVED FOR RELEASE: 08/09/2001 CIA-RDP86-00513R002201520002-7"

"APPROVED FOR RELEASE: 08/09/2001 CIA-RDP86-00513R002201520002-7

USSR UDC 541.123:28

LEVIN, YE. S., KOSTINA, T. K., PETRUSHEVSKIY, M. S., GEL'D, P. V., and KUROCHKIN, K. T., Ural Polytechnic Institute

"Solubility of Hydrogen in Liquid Alloys of Cobalt and Aluminum"

Ordzhonikidze, Izvestiya Vysshikh Uchebnykh Zavedeniy, Tsvetnaya Metallurgiya No 1, 1973, pp 31-36

Abstract: The solubility of hydrogen was studied as a function of the composition of Co-Al alloys ($0 \leq x_{Al} \leq 1$) and temperature (1300-1700°C). The solubility percentage was determined from the hydrogen pressure in a closed system, with a determination error of ± 5.5%. The solubility of hydrogen in Co-Al alloys obeys the square root rule: $[H] = K\sqrt{P_{H_2}}$, where $[H]$ is the hydrogen concentration in alloy, weight percentage; P_{H_2} is the hydrogen pressure in gaseous phase, bar; and K is the hydrogen solubility in alloy (weight percentage/bar ½) which is numerically equal to its solubility in metal at P_{H_2} = 1 bar. The solubility process of hydrogen is accompanied by dissociation of H molecules into atoms (ions), and it changes according to the extremum rule with a minimum at 50-60 at% Al. The solubility process is of an endothermal nature and its dependence on temperature is described by $\log K = AT^{-1} + B$, where A and B are coefficients which depend only on

1/3

APPROVED FOR RELEASE: 08/09/2001 CIA-RDP86-00513R002201520002-7"

"APPROVED FOR RELEASE: 08/09/2001 CIA-RDP86-00513R002201520002-7

USSR

LEVIN, YE. S., et al., Izvestiya Vysshikh Uchebnykh Zavedeniy, Tsvetnaya Metallurgiya, No 1, 1973, pp 31-36

alloy composition. Enthalpy and entropy of the solubility of atomic hydrogen in Co-Al alloys, coefficients of hydrogen activity, and interaction parameters of dissolved hydrogen indicate that the solubility of hydrogen in these alloys is determined by the structure of a shortrange order and by thepresence of microgroups in a melt of changeable composition (Co_xAl_y type). The solubility of hydrogen in Co-Al alloys also depends on Co and Al atoms which do not take part in the formation of localized bonds between Co and Al. The concentration and nature of the solvent atoms which do not participate in the formation of quasi-molecular Co_xAl_y complexes plays an important role in determining the solubility percentage of hydrogen in Co-Al alloys. The solubility of hydrogen at 1535, 1530, and 1630°C in the presence of $x_{Al} \leq 0.6$ is respectively,

$$x_{H,\ 1535^\circ C}^{Co,\ Al} = 0.00058 + 0.002056(x_{Al} - 0.6)^2$$

$$x_{H,\ 1580^\circ C}^{Co,\ Al} = 0.00069 + 0.001839(x_{Al} - 0.6)^2$$

2/3

APPROVED FOR RELEASE: 08/09/2001 CIA-RDP86-00513R002201520002-7"

"APPROVED FOR RELEASE: 08/09/2001 CIA-RDP86-00513R002201520002-7

USSR

LEVIN, YE. S., et al., Izvestiya Vysshikh Uchebnykh Zavedeniy, Tsvetnaya Metallurgiya, No 1, 1973, pp 31-36

$$x_{H,\ 1630^{o}C}^{Co,\ Al} = 0.00076 + 0.001833(x_{Al} - 0.6)^2.$$

When $x_{Al} \geq 0.6$ the hydrogen solubility at the same temperatures is:

$$x_{H,\ 1535^{o}C}^{Co,\ Al} = 0.00058 + 0.004938(x_{Al} - 0.6)^2$$

$$x_{H,\ 1580^{o}C}^{Co,\ Al} = 0.00069 + 0.005312(x_{Al} - 0.6)^2$$

$$x_{H,\ 1630^{o}C}^{Co,\ Al} = 0.00076 + 0.006125(x_{Al} - 0.6)^2.$$

3/3

APPROVED FOR RELEASE: 08/09/2001 CIA-RDP86-00513R002201520002-7"

"APPROVED FOR RELEASE: 08/09/2001 CIA-RDP86-00513R002201520002-7

USSR UDC 546.152+546.185

KOSTINA, V. G., FESHCHENKO, N. G., and KIRSANOV, A. V.

"Phosphorus Oxyiodide, POI_3"

Leningrad, Zhurnal Obshchey Khimii, Vol XLIII (CV), No 1, 1973, p 209

Abstract: Phosphorus oxyiodide was obtained by the interaction of alkoxydiiodophosphines (N. G. Feshchenko, et al., ZhOKH, Vol 43, No 1, 1973) with iodine in carbon tetrachloride or hexane

$$AlkOPI_2 + I_2 \rightarrow [AlkOPI_4] \rightarrow AlkI + POI_3$$

The physical and chemical properties of the material are described. Phosphorus oxyiodide was also obtained with a yield of about 16% of interaction of phosphorus oxychloride with lithium iodide in a benzene solution.

On interaction of alkoxydiiodophosphines with iodine in the absence of solvents, ethyl and propyl iodides were isolated and identified with yields of 81.8 and 82%; the yields of phosphorus oxiiodide in these cases are almost quantitative, but the product is contaminated with iodine and has a low melting point. The yield of the phosphorus oxyiodide is about 85% in the product.

1/1

APPROVED FOR RELEASE: 08/09/2001 CIA-RDP86-00513R002201520002-7"

"APPROVED FOR RELEASE: 08/09/2001 CIA-RDP86-00513R002201520002-7

USSR UDC 547.26'118

FESHCHENKO, N. G., KOSTINA, V. G., and KIRSANOV, A. V.

"Aroxy and Alkoxydiiodo Phosphines"

Leningrad, Zhurnal Obshchey Khimii, Vol XLIII (CV), No 1, 1973, pp 209-210

Abstract: Aroxy and alkoxydiiodo phosphines were synthesized by the interaction of solutions of aroxy and alkoxy dichlorophosphines with lithium iodide in carbon tetrachloride or hexane at -10 to -20°.

$$ROPCl_2 + 2LiI \longrightarrow ROPI_2 + 2LiCl$$

The aroxy and alkoxy diiodophosphines are light yellow or light brown liquids which fume in the air, are stable at -50 to -60° in the absence of oxygen, decompose very slowly at -20° and very rapidly at 0°.

An experimental procedure for obtaining the two compounds is given.

1/1

APPROVED FOR RELEASE: 08/09/2001 CIA-RDP86-00513R002201520002-7"

"APPROVED FOR RELEASE: 08/09/2001 CIA-RDP86-00513R002201520002-7

USSR UDC 581.19:582.285.2

TARABRIN, G. A., CHKANIKOV, D. I., and KOSTINA, V. I., All-Union Research Institute for Phytopathology imeni B. Vyazema

"Hydrolytic Enzymes of the Uredospores of Wheat Stem Rust"

Leningrad, Mikologiya i Fitopatologiya, Vol 7, No 5, 1973, pp 424-428

Abstract: Studies on the uredospores of the wheat stem rust agent, Puccinia graminis f. sp. tritici, showed high activities for β- glucosidase, α-galactosidase, α-mannosidase, acetyl esterase, and acid phosphatase; α-glucosidase was absent and β-galactosidase activity was relatively low. The activities of homogenates were not significantly higher than those of intact spores. Uredospores belonging to different races of this agent showed great variability to enzymatic activity, which may be related to virulence (ease of penetration into wheat tissues). Buds and primary hyphae showed high activities for β-glucosidase, α-galactosidase, and α-mannosidase.

1/1

APPROVED FOR RELEASE: 08/09/2001 CIA-RDP86-00513R002201520002-7"

"APPROVED FOR RELEASE: 08/09/2001 CIA-RDP86-00513R002201520002-7

UNCLASSIFIED PROCESSING DATE--11SEP70

1/2 026

TITLE--CONDITIONS FOR CARBOXYNITROLIC ACID FORMATION DURING THE NITRIC ACID OXIDATION OF CYCLOHEXANOL -U-

AUTHOR--TRUBNIKOVA, V.I., PREOBRAZHENSKIY, V.A., GOLDMAN, A.M., FURMAN, M.S., KOSTINA, V.N.

COUNTRY OF INFO--USSR

SOURCE--KHIM. PROM. (MOSCOW) 1970, 46(1), 12-14

DATE PUBLISHED--------70

SUBJECT AREAS--CHEMISTRY

TOPIC TAGS--NITRIC ACID, OXIDATION, CYCLOHEXANOL, CARBOXYL RADICAL, CHEMICAL REACTION RATE, ACTIVATION ENERGY

CONTROL MARKING--NO RESTRICTIONS

DOCUMENT CLASS--UNCLASSIFIED

PROXY REEL/FRAME--1985/1453 STEP NO--UR/0064/70/046/001/0012/0014

CIRC ACCESSION NO--AP0101539

UNCLASSIFIED

APPROVED FOR RELEASE: 08/09/2001 CIA-RDP86-00513R002201520002-7"

"APPROVED FOR RELEASE: 08/09/2001 CIA-RDP86-00513R002201520002-7

2/2 026 UNCLASSIFIED PROCESSING DATE--11SEP70

CIRC ACCESSION NO--AP0101539

ABSTRACT/EXTRACT--(U) GP-0- ABSTRACT. A CYCLOHEXANOL (I) 57PERCENT HNO SUB3 MIXT. (MOLE RATIO 1:7) WAS AGITATED (BY BUBBLING N) 1 TO 30 MIN AT 35DEGREES; THE CONCN. OF CARBOXYNITROLIC ACID HO SUB2 C (CH SUB2) SUB4 C (:NOH) NO SUB2 (II) IN THE MIXT. INCREASED FROM 0.48 M AFTER 1.9 MIN TO 0.685 M AFTER 10.0 MIN, AND DECREASED SLIGHTLY THEREAFTER. THE MAX. YIELD (60PERCENT) OF II WAS OBTAINED WHEN THE REACTION WAS CARRIED OUT AT 45 TO 55DEGREES. THE RATE CONST. OF THE REACTION (K) WAS 0.5 MIN PRIME NEGATIVE1 AT 30DEGREES; LOG K INCREASED LINEARLY FROM NEGATIVE4 TO 3 WHEN THE TEMP. INCREASED FROM 5 TO 55DEGREES; THE ENERGY OF ACTIVATION WAS 25.4 KCAL. PER MOLE.

APPROVED FOR RELEASE: 08/09/2001 CIA-RDP86-00513R002201520002-7"

"APPROVED FOR RELEASE: 08/09/2001 CIA-RDP86-00513R002201520002-7

KOSTINSKAYA, L. I.

(OLEE)

TECHNICAL TRANSLATION

FSTC-HT-23-527-71

ENGLISH TITLE: Peach Polyphenols and Their Role in Changing the Color of Fruit

FOREIGN TITLE: Not indicated

AUTHOR: A. L. Fel'dman, L. I. Kostinskaya

SOURCE: Prikladnaya Biokhimiya i Mikrobiologiya, Vol 6, No. 4, 1970, pp 442-445

Translated for FSTC by AGSI

NOTICE

The contents of this publication have been translated as presented in the original text. No attempt has been made to verify the accuracy of any statement contained herein. This translation is published with a minimum of copy editing and graphics preparation in order to expedite the dissemination of information. Requests for additional copies of this document should be addressed to Department A, National Technical Information Service, Springfield, Virginia 22151. Approved for public release; distribution unlimited.

APPROVED FOR RELEASE: 08/09/2001 CIA-RDP86-00513R002201520002-7"

"APPROVED FOR RELEASE: 08/09/2001 CIA-RDP86-00513R002201520002-7

1/2 039 UNCLASSIFIED PROCESSING DATE--30OCT70

TITLE--NEW ELECTRON BEAM TUBE OPTICAL LASER BASED ON ELECTRON EXCITATION -U-

AUTHOR-(05)-KOZINA, G.S., KOSTINSKAYA, T.A., KURBATOV, L.N., TSEKHANOVICH, M.V., ALEKSEYEVA, L.A.

COUNTRY OF INFO--USSR

SOURCE--MOSCOW, RADIOTEKHNIKA I ELEKTRONIKA, VOL 15, NO 2, 1970, PP 365-367

DATE PUBLISHED--------70

SUBJECT AREAS--PHYSICS

TOPIC TAGS--OPTIC PROPERTY, SEMICONDUCTOR LASER, GALLIUM ARSENIDE, ELECTRON BEAM EXCITATION

CONTROL MARKING--NO RESTRICTIONS

DOCUMENT CLASS--UNCLASSIFIED

PROXY REEL/FRAME--1992/1151 STEP NO--UR/0109/70/015/002/0365/0367

CIRC ACCESSION NO--AP0112254

UNCLASSIFIED

APPROVED FOR RELEASE: 08/09/2001 CIA-RDP86-00513R002201520002-7"

"APPROVED FOR RELEASE: 08/09/2001 CIA-RDP86-00513R002201520002-7

2/2 039 UNCLASSIFIED PROCESSING DATE--30OCT70

CIRC ACCESSION NO--AP0112254

ABSTRACT/EXTRACT--(U) GP-0- ABSTRACT. THE CONSTRUCTION AND CHARACTERISTICS OF A SEALED OFF SEMICONDUCTOR LASER WITH ELECTRON EXCITATION PRODUCED BY A GALLIUM ARSENIDE CRYSTAL ARE DESCRIBED. ITS BASIC CHARACTERISTICS ARE: PEAK POWER, 13 W. AVERAGE POWER, 100 MW. PULSE DURATION, 1 MICROSEC. PULSE FREQUENCY, UP TO 10KHZ. SAMPLES OF GALLIUM ARSENIDE AS N AND P TYPE WITH (1-4) TIMES 10 PRIME18 CM-3 CONCENTRATION OF IMPURITIES, COOLED TO LIQUID NITROGEN TEMPERATURE, ARE USED AS THE RADIATIVE ELEMENTS. THE DEPENDENCE OF PEAK, P SUBPULSE, AND AVERAGE, P SUB4, RADIATION POWERS ON PULSE ABSTRACT: FREQUENCY IS PLOTTED IN A GRAPH WHICH SHOWS THAT P SUBPULSE DECREASES WITH INCREASING FREQUENCY ABOVE 200 HZ AND THAT AT F EQUALS 10KHZ IS ONLY 17 PERCENT OF THE MAXIMUM VALUE. THE GRAPH ALSO SHOWS THAT THE AVERAGE POWER INCREASES TO A MAXIMUM AT 5-6KHZ. AN EFFICIENT WAY FOR INCREASING THE PEAK POWER IS TO INCREASE THE BEAM CURRENT DENSITY. AN INCREASE IN CURRENT DENSITY UP TO 30-40 A-CM PRIME2 WITHOUT CHANGING THE SPOT DIMENSION, MAKES IT POSSIBLE TO SUBSTANTIALLY INCREASE THE RADIATION POWER OF THE TUBE. IT IS CONCLUDED THAT THE OPTIMIZATION OF TUBE CHARACTERISTICS SHOULD PROCEED ALONG THE LINES OF RADIATIVE MATERIAL AND ELECTRON OPTIC SYSTEM IMPROVEMENT. A SCHEMATIC DIAGRAM OF THE TUBE IS PRESENTED.

UNCLASSIFIED

APPROVED FOR RELEASE: 08/09/2001 CIA-RDP86-00513R002201520002-7"

"APPROVED FOR RELEASE: 08/09/2001 CIA-RDP86-00513R002201520002-7

USSR UDC 621.373.029.67

KOZINA, G. S., KOSTINSKAYA, T. A., KURBATOV, L. N., TSEKHANOVICH, M. V., ALEKSEYEVA, L. A.

"New Electron-Beam Tube-Optical Laser Based on Electron Excitation"

Moscow, Radiotekhnika i Elektronika, Vol 15, No 2, 1970, pp 365-367

Abstract: The construction and characteristics of a sealed-off semiconductor laser with electron excitation produced by a gallium-arsenide crystal are described. Its basic characteristics are:

peak power - 13 w.
average power - 100 mw.
pulse duration - 1 microsec.
pulse frequency - up to 10kHz.

Samples of gallium-arsenide as n- and p- type with (1-4) x 10^{18}cm-3 concentration of impurities, cooled to liquid nitrogen temperature, are used as the radiative elements. The dependence of peak, P_{pulse}, and average, P_r, radiation powers on pulse

1/2

APPROVED FOR RELEASE: 08/09/2001 CIA-RDP86-00513R002201520002-7"

"APPROVED FOR RELEASE: 08/09/2001 CIA-RDP86-00513R002201520002-7

USSR

KOZINA, G. S., et al, Radiotekhnika i Elektronika, Vol 15, No 2, 1970, pp 365-367

Abstract: frequency is plotted in a graph which shows that P_{pulse} decreases with increasing frequency above 200 Hz and that at f = 10kHz is only 17 percent of the maximum value. The graph also shows that the average power increases to a maximum at 5-6kHz. An efficient way for increasing the peak power is to increase the beam current density. An increase in current density up to 30-40 A/cm^2 without changing the spot dimension, makes it possible to substantially increase the radiation power of the tube. It is concluded that the optimization of tube characteristics should proceed along the lines of radiative material and electron optic system improvement. A schematic diagram of the tube is presented. Orig. art has: 4 figures.

2/2

APPROVED FOR RELEASE: 08/09/2001 CIA-RDP86-00513R002201520002-7"

"APPROVED FOR RELEASE: 08/09/2001 CIA-RDP86-00513R002201520002-7

USSR

K

[illegible]

GREVTSEV, [illegible], [illegible], A. V., [illegible], [illegible], [illegible], [illegible], [illegible], PETROV, [illegible] P.

"An Installation for Film Vaporization by the Method of Electrical Explosion of Foil"

Elektron. prom-st'. Nauchno-tekhn. sb. (The Electronics Industry. Scientific and Technical Collection), 1970, No 1, pp 67-69 (From RZh-Radiotekhnika, [illegible], Abstract No 10V233)

Translation: The authors describe the semiautomatic MEV-1 machine [illegible] for laboratory production of vaporized current-conducting films, contact areas and so forth by the method of electrically exploding foil. To assure directed flight of the foil particles, a magnetic field is used together with a special directing device which utilizes gas-kinetic forces. A bank of capacitors is used to create the explosion. Three illustrations, bibliography of six titles. N. S.

1/1

APPROVED FOR RELEASE: 08/09/2001 CIA-RDP86-00513R002201520002-7"

"APPROVED FOR RELEASE: 08/09/2001 CIA-RDP86-00513R002201520002-7

(4)

USSR

UDC 632.95

ARNOL'DOV, Ye. M., MITYAKINSKIY, V. I., GLADILIN, I. K., TAKUBA, A. R., KOSTITSIN, B. A., KIYASHKO, V. K., KAZ'MIN, M. F., SHUL'MAN, V. N.

"A Method of Making the Discharge Form of Copper 2,4,5-Trichlorophenoxide"

USSR Author's Certificate No 345121, filed 14 Feb 69, published 9 Aug 72 (from RZh-Khimiya, No 9, May 73, abstract No 9N509P by T. G. Chekareva)

Translation: A method is proposed for making a commerical form of copper, 2,4,5-trichlorophenoxide (I) used in making poisons. A wet paste of compound I is filtered, pressed to a moisture content of 50-55%, loaded into a crank mixer, and mixed with talc and kaolin in a ratio of 1:1:2 respectively. The mixture is agitated for 1-2 hours. It is then loaded as a powder containing 16-20% moisture into a drier with a fluidized bed of inert material. The degree of moisturizing of the dry product in the cyclone is of the order of 96-97%.

1/1

APPROVED FOR RELEASE: 08/09/2001 CIA-RDP86-00513R002201520002-7"