"APPROVED FOR RELEASE: 08/09/2001 CIA-RDP86-00513R002201520010-8

USSR UDC 511

KOTSAREV, V. G.

"Concerning the Number of Solutions of a Waring-Type Comparison"

Matematicheskiye Zametki, Vol 7, No 6, June 1970, pp 665-670

Abstract: An asymptotic formula is obtained for the number of solutions of a comparison of the Waring type in an incomplete system of residues according to a modulus equal to the degree of a prime number.

1/1

APPROVED FOR RELEASE: 08/09/2001 CIA-RDP86-00513R002201520010-8"

"APPROVED FOR RELEASE: 08/09/2001 CIA-RDP86-00513R002201520010-8

USSR

UDC 576.85(478)

MARITS, A. A., CHASHCHINA, I. N., CHERVINSKAYA, S. I., ELKIS, K. U., KORNES, R. V., BELYAYEVA, N. S., CHEBAN, Ye. D., KOTSEFAN, A. S., DOBRUSKINA, S. V., GURCHIOGLUYANTS, L. V., and MIKHAYLOVA, A. A., Moldavian Scientific Research Institute of Hygiene and Epidemiology and Kishinev Sanitary Epidemiological Station

"Fermentation Reaction Types and Colicinogenic Properties of Shigella Sonnei Circulating in the City of Kishinev, and Determining Their Sensitivity to Antibiotics"

Kishinev, Zdravookhraneniye, No 5, Sep/Oct 71, pp 7-9

Abstract: The Shigella sonnei strain accounted for 97.9-99 percent of the cases of dysentery in Kishinev in 1968-70. The object of this study was to identify the types of fermentation reactions of Shigella sonnei isolated in 1968-70 (4,507 cultures), and to study their colicinogenic properties and sensitivity to antibiotics. Shigella bacilli isolated from victims in 1968 were found to be primarily fermentation type II (71.4 percent); in 1969-70, type I bacilli predominated (66.4-94.1 percent); Shigella type III was most frequently isolated from the healthy. The results of studies on colicin production showed that, of 922 cultures, 842 were inactive with respect to E. coli K-12 and E. coli B and φ; 76 cultures were colicin type K-12; 4, colicin type ρ.

1/2

APPROVED FOR RELEASE: 08/09/2001 CIA-RDP86-00513R002201520010-8"

"APPROVED FOR RELEASE: 08/09/2001 CIA-RDP86-00513R002201520010-8

USSR

MARITS, A. A., et al., Zdravookhraneniye, No 5, Sep/Oct 71, pp 7-9

Among the K-12 type cultures, 54 percent were fermentation type I; 44.8 percent were type II; and 1.2 percent were type III. The cultures isolated in 1969 exhibited a gradual decrease of strains sensitive to levomycetin, and a growing number of strains sensitive to neomycin and monomycin.

2/2

APPROVED FOR RELEASE: 08/09/2001 CIA-RDP86-00513R002201520010-8"

"APPROVED FOR RELEASE: 08/09/2001 CIA-RDP86-00513R002201520010-8

7

USSR

UDC 616.935:576.8

MARITS, A. A., CHASHCHINA, I. N., CHERVINSKAYA, S. I., [redacted], BELYAYEVA, N. S., CHEBAN Ye. D., KOTSEFAN, A. S., KONNES, R. B., [redacted], S. V., GURCHIOGLUYANITS, L. V., and [redacted], A. A., Moldavian Scientific Research Institute of Hygiene and Epidemiology, and Kishinev Sanitary Epidemiological Station

"Enzymatic Types of Sonnei Dysentery Pathogens Circulating in Kishinev"

Kishinev, Zdravookhraneniye, No 3, May/June 1970, pp 48-49

Abstract: The number of Sh. Sonnei strains isolated in Kishinev in 1969 was more than four times greater than in 1959. Many healthy individuals are carriers of these bacteria. A total of 1,714 cultures of Shigella Sonnei were investigated to determine their morphological, peptolytic, antigenic, and other properties, including their ability to ferment sugars to acids. Pathogens were classified into three enzymatic types. Type I -- cultures ferment rhamnose within the first 24 hours of incubation at 37°C, but do not ferment xylose for a week; type II -- cultures ferment rhamnose with a delay (after three to four days), or do not ferment either rhamnose or xylose; type III -- cultures ferment both sugars within the first 24 hours. Of the 1,714 cultures investigated, 71.4% belonged to type II, 21.5% to type I, and 7.1% to type III. The tests are fairly easy and can be performed in routine clinical laboratories.

1/1

APPROVED FOR RELEASE: 08/09/2001 CIA-RDP86-00513R002201520010-8"

"APPROVED FOR RELEASE: 08/09/2001 CIA-RDP86-00513R002201520010-8

USSR UDC 621.373.444

KOTSEV, A.I. [People's Republic Of Bulgaria]

"Analysis Of The Operation Of A Driven Multivibrator Using Transistors Of A Different Type Of Conductivity"

Radiotekhnika, Vol 27, No 4, Apr 1972, pp 99-102

Abstract: The results are presented of an analysis of one of the most promising circuits of a driven multivibrator, only briefly covered in a previous paper (V.N. Yakovlev, "Transistorized Pulse Generators," Kiev, Tekhnika, 1968) without expansion of the most important relationships which determine its efficiency and reliability. The author of the present paper discusses the purpose of multivibrators using transistors of a different type of conductivity (MDT), the principal circuit of MDT, the state of rest, the operating stage, the choice of operating conditions, and the average power which is dissipated in the MDT. 5 fig. 1 ref. Received, 2 Aug 1971.

1/1

APPROVED FOR RELEASE: 08/09/2001 CIA-RDP86-00513R002201520010-8"

"APPROVED FOR RELEASE: 08/09/2001 CIA-RDP86-00513R002201520010-8

1/2 C11 UNCLASSIFIED PROCESSING DATE--11DEC70

TITLE--GAS ABUNDANCE OF MINE NO. 10 VELIKO-MOSTOVSKAYA -U-

AUTHOR-(04)-KLSHNIRUK, V.A., IVANOV, A.K., POPEL, G.S., ROTSKO, YA.A.

COUNTRY OF INFO--USSR

SOURCE--DOPLV. AKAD. NAUK UKR. RSR, SER. B 1970, 32(2), 106-10

DATE PUBLISHED--------70

SUBJECT AREAS--MECH., IND., CIVIL AND MARINE ENGR, MATERIALS

TOPIC TAGS--MINING ENGINEERING, SAFETY ENGINEERING, METHANE, COAL, MINERAL DEPOSIT, GEOGRAPHIC LOCATION

CONTROL MARKING--NO RESTRICTIONS

DOCUMENT CLASS--UNCLASSIFIED

PROXY FICHE NO----FD70/605060/F04 STEP NO--UR/0442/70/032/002/0106/0110

CIRC ACCESSION NO--ATD144414

UNCLASSIFIED

APPROVED FOR RELEASE: 08/09/2001 CIA-RDP86-00513R002201520010-8"

"APPROVED FOR RELEASE: 08/09/2001 CIA-RDP86-00513R002201520010-8

2/2 011 UNCLASSIFIED PROCESSING DATE--11DEC70

CIRC ACCESSION NO--AT0144414

ABSTRACT/EXTRACT--(U) GP-0- ABSTRACT. THE AMT. AND COMPN. OF GASES WAS DETD. IN VARIOUS COAL LAYERS OF TITLE DEPOSIT FROM 174 GAS SAMPLES TAKEN FROMD RILL HOLES. THE CH SUB4 CONTENT IN GASES OF THE MINE WAS EXCEPTIONALLY NONUNIFORM BOTH BY THE SECTION OF INDIVIDUAL LAYERS AND IN THE ENTIRE AREA. FACILITY: INST. GEOL. GEOKHIM. GORYUCH. KOPALIN, LVOV, USSR.

UNCLASSIFIED

APPROVED FOR RELEASE: 08/09/2001 CIA-RDP86-00513R002201520010-8"

"APPROVED FOR RELEASE: 08/09/2001 CIA-RDP86-00513R002201520010-8

USSR

UDC 629.76/.78.015:533.6

GROBOV, V. A., KOTSYUBA, A. V.

"The Jacobi Method in the Problem of Nonstationary Motion Around the Center of Mass of an Uncontrolled Body Entering the Atmosphere With Hypersonic Velocity"

V sb. Analit. i kachestven. metodv teorii differents. uravnenii (Analytical and Quantitative Method in the Theory of Differential Equations -- Collection of Works), Kiev, 1972, pp 62-73 (from RZh-Mekhanika, No 3, Mar 73, Abstract No 3B343)

Translation: The problem of the nonstationary motion of a rotating solid upon entry into the atmosphere with hypersonic velocity is solved. Weight asymmetry and the nonlinearity of aerodynamic and damping moments are taken into account. A system of differential equations is given for the unperturbed and perturbed motions in the form of canonical Hamilton equations along with expressions for the kinetic energy, generalized forces and other quantities entering into the equations of motion. A solution is given for the equation of the unperturbed motion and the sequence for obtaining the solution of the unperturbed motion is described. 7 ref. P. I. Zheludev.

1/1

APPROVED FOR RELEASE: 08/09/2001 CIA-RDP86-00513R002201520010-8"

"APPROVED FOR RELEASE: 08/09/2001 CIA-RDP86-00513R002201520010-8

USSR UDC 629.7.015.7

GROBOV, V. A., and KOTSYUBA, A. V., Kiev

"Unsteady Three-Dimensional Motion of an Aircraft Entering the Atmosphere at Hypersonc Velocity"

Kiev, Prikladnaya Mekhanika, Vol 8, No 12, Dec 72, pp 71-79

Abstract: The motion of the relative center of mass of an asymmetrical uncontrolled body is analyzed upon descending into the atmosphere along a given trajectory for which rotation around the longitudinal axis is noticed upon entry into the atmosphere. The method of perturbations was used to study the interrelated rotational motions and nonlinear vibrations along the angle of attack. Results of numerical calculations are presented which illustrate the nature of change of the longitudinal angular velocity and amplitude of vibrations in the process of descent. 3 figures, 6 bibliographic references.

1/1

APPROVED FOR RELEASE: 08/09/2001 CIA-RDP86-00513R002201520010-8"

"APPROVED FOR RELEASE: 08/09/2001 CIA-RDP86-00513R002201520010-8

USSR UDC 533.697

KOTSYUBA, V. P.

"Hydraulic Resistances of Tubes of Noncircular Cross Section Under the Motion of Pure Air"

Tr. Altaysk. politekhn. in-ta (Works of Altayskiy Polytechnical Institute), 1972, No. 17, pp 217-219 (from RZh-Mekhanika, No 3, Mar 73, Abstract No 3B398)

Translation: The results of an experimental study of the hydraulic resistance of conduits of square, polygonal, semicircular and circular cross sections with the same hydraulic radius and the same length are presented. The Reynolds number in these experiments varied from 10,000 to 300,000. The same empirical formula relating the coefficient of friction with the Reynolds number is proposed for all types of cross sections. 5 ref. T. A. Girshovich.

1/1

APPROVED FOR RELEASE: 08/09/2001 CIA-RDP86-00513R002201520010-8"

"APPROVED FOR RELEASE: 08/09/2001 CIA-RDP86-00513R002201520010-8

USSR UDC: 621.317.3:2

BRAYKO, V. V., KOTSYUBA, Ye. N., VIZHENSKIY, A. D., TARANOV, S. G.

"A Precision Device for Measuring Weak Signals of Primary Converters"

Dokl. Vses. nauchno-tekhn. konferentsii po radiotekhn. izmereniyam. T. 3 (Reports of the All-Union Scientific and Technical Conference on Radio Engineering Measurements. Vol. 3), Novosibirsk, 1970, pp 75-76 (from RZh-Radiotekhnika, No 1, Jan 71, Abstract No 1A307)

Translation: Excellent resistance to interference and high precision in this measuring device are achieved by virtue of the selective properties of the circuit, in which differential feedback is used. A block diagram of the device is given and its operation is described. The error of the device, excluding the error of the output instrument is no more than 0.05 percent in the range of signals up to 1 mV at a carrier frequency of 1 kHz. E. L.

1/1

APPROVED FOR RELEASE: 08/09/2001 CIA-RDP86-00513R002201520010-8"

"APPROVED FOR RELEASE: 08/09/2001 CIA-RDP86-00513R002201520010-8

Hematology

USSR

UDC 617-001.36-07:616.151.5-07

PLESHAKOV, V. T., TSYBULYAK, G. N., KOTSYUBINSKIY, N. N., and TABATADZE, K. G., Clinic of Military Field Surgery, Hospital Surgical Clinic, and Faculty Therapeutic Clinic, Military Medical Academy imeni S. M. Kirov, Leningrad

"The Coagulation and Fibrinolytic Systems of the Blood in Traumatic Shock"

Leningrad, Vestnik Khirurgii imeni I. I. Grekova, Vol 106, No 6, Jun 71, pp 94-98

Abstract: Observations on 28 patients with shock of the 13 degree due to severe trauma showed that the concentration of fibrinogen in the blood decreased, while the fibrinolytic activity increased markedly and the time of coagulation increased to some extent. Experiments were conducted on dogs in which changes in coagulation and fibrinolysis upon acute blood loss, as a result of pain trauma combined with blood loss, and under the effect of blood loss or trauma and blood loss followed by reverse transfusion of the lost blood were studied. Blood loss as such reduced fibrinolysis in the initial stage. In a later stage, the concentration of fibrinogen decreased because of partial intravascular coagulation. The time of coagulation decreased. As a result of trauma combined with blood loss, hypofibrinogenemia developed because of increased fibrinolysis-intravascular coagulation did not contribute to this

1/2

APPROVED FOR RELEASE: 08/09/2001 CIA-RDP86-00513R002201520010-8"

"APPROVED FOR RELEASE: 08/09/2001 CIA-RDP86-00513R002201520010-8

USSR

PLESHAKOV, V. T., et al., Vestnik Khirurgii imeni I. I. Grekova, Vol 106, No 6, Jun 71, pp 94-98

effect. Blood transfusion accelerated fibrinolysis and increased the coagulation time, with these effects becoming more pronounced as the rate of blood transfusion was increased. The experimental results on the effects of trauma combined with blood loss did not explain the increase in the coagulation time observed on patients; the coagulation time regularly decreased in the experiments (the latter is characteristic for trauma and is due to release into the blood stream of products of tissue degradation as well as to a reflex reaction to pain). The acceleration of fibrinolysis in patients also did not correspond to the results of experiments on the effects of a blood loss in which the fibrinolytic activity was inhibited. Evidently, the increase in the coagulation time and the acceleration of fibrinolysis that were observed on patients were due to blood transfusion.

2/2

APPROVED FOR RELEASE: 08/09/2001 CIA-RDP86-00513R002201520010-8"

"APPROVED FOR RELEASE: 08/09/2001 CIA-RDP86-00513R002201520010-8

Therapy

UDC 612.014.461

USSR

KOROBKINA, A. G., KOTSYUBINSKIY, N. N., and ZIMINA, E. P.

"Effect of Sigma-Aminocaproic Acid on Combined Radiation Lesions"

Moscow, Voyenno-Meditsinskiy Zhurnal, No 2, 1971, pp 42-46

Abstract: Sigma-aminocaproic acid, a synthetic inhibitor of fibrinolysis, inhibits the conversion of plasminogen into plasmin, suppresses fibrinolysis, promotes better and more rapid consolidation of blood clots, and mitigates hemorrhagic phenomena. It was administered to dogs by itself or with blood transfusions and antibiotics at different times following irradiation (500r) and fracture of the femur. One group received the acid (5% solution intravenously at the rate of 0.3 g/kg), transfusion, and antibiotics during the latent period (day 1 to day 3). Another received the same treatment at the height of radiation sickness (from day 6 to day 20). A third group was given only the acid from day 1 to day 30. The results showed that the survival rate of the animals that received sigma-aminocaproic acid during the latent period was significantly higher than in the control, while the survival rate of the other two groups of animals was the same as in the control. When the acid was administered at the height of the disease, either by itself or as part of complex therapy, it aggravated the course of the combined lesions and

1/2

APPROVED FOR RELEASE: 08/09/2001 CIA-RDP86-00513R002201520010-8"

"APPROVED FOR RELEASE: 08/09/2001 CIA-RDP86-00513R002201520010-8

USSR

KOROBKINA, A. G., et al., Voyenno-Meditsinskiy Zhurnal, No 2, 1971, pp 42-46

most of the animals died with pronounced hemorrhagic symptoms.

2/2

APPROVED FOR RELEASE: 08/09/2001 CIA-RDP86-00513R002201520010-8"

"APPROVED FOR RELEASE: 08/09/2001 CIA-RDP86-00513R002201520010-8

USSR UDC 541.182.2/.3

SUTUGIN, A. G., KOTTSEV, E. I., and FUKS, N. A., Physicochemical Institute imeni L. Ya. Karpov, Moscow

"Formation of Condensation Highly-Dispersed Uncoagulated Aerosols"

Moscow, Kolloidnyy Zhurnal, Vol 33, No 4, Jul-Aug 71, pp 585-591

Abstract: The authors made an experimental study of aerosol formation during the condensation of silver vapors with a low concentration under conditions corresponding to those used in calculations previously performed by them. The aerosol generator resembled the instrument of HIGUCHI and O'KONSKI. It was found that monodisperse aerosols with a low particle number concentration ($5 \cdot 10^1 - 3 \cdot 10^8$ cm^{-3}) are formed. It is suggested that the formation of such aerosols is due to heterogeneous condensation on the impurity nuclei, as well as the assumed existence of a relationship between the efficiency of the collisions of molecular aggregates with each other and with the vapor molecules and the size of these aggregates. An EVTsM-220 was used for the calculations.

1/1

APPROVED FOR RELEASE: 08/09/2001 CIA-RDP86-00513R002201520010-8"

"APPROVED FOR RELEASE: 08/09/2001 CIA-RDP86-00513R002201520010-8

Miscellaneous

USSR UDC 632.95

KOTYATSY, I. A.

"Poisons as a Factor in Environmental Pollution"

V sb. Vliyaniye yadokhimikatov na vneshn. sredu (Effect of Poisons on the Environment--collection of works), Kishinev, 1972, pp 3-5 (from RZh-Khimiya, No 2 (II), Feb 73, Abstract No 2N484)

Translation: The problem of the accumulation of the residues of poisons used in agriculture in the soil, in bodies of water, the atmosphere, the products of agriculture, forestry, animal husbandry and the foods industry is discussed.

1/1

APPROVED FOR RELEASE: 08/09/2001 CIA-RDP86-00513R002201520010-8"

"APPROVED FOR RELEASE: 08/09/2001 CIA-RDP86-00513R002201520010-8

1/2 016 UNCLASSIFIED PROCESSING DATE--23OCT70

TITLE--EVALUATION OF THE SUSCEPTIBILITY OF STEEL TO REVERSIBLE TEMPER BRITTLENESS -U-

AUTHOR-(03)-GLIKMAN, YE.E., GRDINA, YU.V., KOTYSHEV, V.F.

COUNTRY OF INFO--USSR

SOURCE--IZV. VYSSH. UCHEB. ZAVED., CHERN. MET. 1970, 13(2), 113-17

DATE PUBLISHED--------70

SUBJECT AREAS--MATERIALS

TOPIC TAGS--METAL BRITTLENESS, STEEL HEAT TREATMENT, MANGANESE STEEL

CONTROL MARKING--NO RESTRICTIONS

DOCUMENT CLASS--UNCLASSIFIED

PROXY REEL/FRAME--1994/1789 STEP NO--UR/0148/70/013/002/0113/0117

CIRC ACCESSION NO--AT0115618

UNCLASSIFIED

APPROVED FOR RELEASE: 08/09/2001 CIA-RDP86-00513R002201520010-8"

"APPROVED FOR RELEASE: 08/09/2001 CIA-RDP86-00513R002201520010-8

2/2 016 UNCLASSIFIED PROCESSING DATE--23OCT70

CIRC ACCESSION NO--AT0115618

ABSTRACT/EXTRACT--(U) GP-0- ABSTRACT. FIVE STEELS WERE REFINED BY ANNEALING IN H, QUENCHING IN WATER FROM 1000-1150 AND 920-50DEGREES, AND SUBJECTED TO "DOUBLE TEMPERING" (E. E. GLIKMAN, ET AL., 1967). A TOUGH STATE WAS PRODUCED BY COOLING IN WATER FROM 650DEGREES, WHILE THE BRITTLE STATE WAS PRODUCED BY HOLDING AN ADDNL. 24 HR AT 530DEGREES. WITH STEELS CONTG. 1.50-1.85PERCENT MN, 2 TEMP. REGIONS OF BRITTLENESS DEVELOPMENT WERE DETD. (500-50 AND 600-50DEGREES). ADDNL. STUDIES ARE NECESSARY TO EXPLAIN THE NATURE OF HIGH TEMP. BRITTLENESS.

FACILITY: SIB. MET. INST., NOVOKUZNETSK, USSR.

UNCLASSIFIED

APPROVED FOR RELEASE: 08/09/2001 CIA-RDP86-00513R002201520010-8"

"APPROVED FOR RELEASE: 08/09/2001 CIA-RDP86-00513R002201520010-8

JPRS 59208

6-73

4

IX-4a. STUDY OF GERMANIUM EPITAXY FROM A MOLECULAR BEAM IN A VACUUM THROUGH THE LIQUID PHASE

Article by A. L. Pakatev, Yu. P. Milashenko, A. N. Kotyukov, Yu. G. Chistyakov, [illegible], Novosibirsk, III Simpozium po Protsessam Rosta i Sintsza Poluprovodnikovykh Kristallov i Plenok, Russian, 12-17 June 1972, p 116]

A study was made of germanium epitaxy from a molecular beam in a vacuum [10^{-6} to 10^{-5} mm Hg] through a layer of previously formed liquid phase [tin, indium, gallium] on the surface of various substrates [germanium, silicon or gallium arsenide]. The best results were obtained for the case of germanium condensation through the alloy layer[tin-lead] on the surface of the monocrystalline germanium substrate. This is explained by the best wetting conditions. The deposition of the metal creating the liquid phase was carried out at a substrate temperature of 70-100 degrees, subsequent pickling of the metal at a temperature of 300-500 degrees, and deposition of germanium through the liquid phase layer, at 300-400 degrees. The x-ray diffraction method of Kossel was used to estimate the variation of the crystal lattice parameter of the autoepitaxial layer of germanium on saturation of it with tin [0.87 atomic percent]. The possibility of creating microdiodes using the given process is demonstrated. The volt-ampere characteristics of the microdiodes 0.2mm in diameter [the n-type layer, the p-type substrate] are close to the characteristics of the all-purpose D1Ye and D1Zh germanium point-contact diodes. The results obtained indicate the prospectiveness of the given method of epitaxy for the creation of homojunctions and heterojunctions based on semiconductors.

KOTYUKOV, A.N.

APPROVED FOR RELEASE: 08/09/2001 CIA-RDP86-00513R002201520010-8"

"APPROVED FOR RELEASE: 08/09/2001 CIA-RDP86-00513R002201520010-8

USSR

KOTYUKOV, V. I.

"Optimization of the Fisher-Wilks Criterion and Reduction of the Initial System of the Description in Problems of Pattern Recognition"

Vychisl. Sistemy [Computer Systems -- Collection of Works], No 50, Novosibirsk, 1972, pp 136-142 (Translated from Referativnyy Zhurnal, Kibernetika, No 3, Moscow, 1973, Abstract No 3 V250 by the author).

Translation: A method is suggested allowing rather precise determination of the discrimanant function in a space of great dimensionality. An algorithm is described for minimization of the initial system of characteristics (parameters) in problems of discriminant and approximation analysis, based on solution of a problem in linear programming. One type of recognition problem is also studied: a discriminant criterion is introduced considering the specific nature of the problem.

1/1

APPROVED FOR RELEASE: 08/09/2001 CIA-RDP86-00513R002201520010-8"

"APPROVED FOR RELEASE: 08/09/2001 CIA-RDP86-00513R002201520010-8

USSR UDC: 51:155.001.57:681.3.06

KOTYUKOV, V. I.

"Pattern Recognition in Boolean Space"

V sb. Vychisl. sistemy (Computer Systems--collection of works), vyp. 44, Novosibirsk, "Nauka", 1971, pp 23-34 (from RZh-Kibernetika, No 12, Dec 71, Abstract No 12V999)

Translation: The paper describes the method of "Generalizable Relations" and its concretization for the case of a resolving rule in Boolean space. The essence of the method is as follows.

1. The set $\{F_i\}$ is broken up into two subsets $\{F_i\}_a$ and $\{F_i\}_b$, where $\{F_i\}_b$ is the set of "powers" of the operators which enable determination of fairly complex relations, and $\{F_i\}_a$ is the set of "working", "simple" operators which enable determination of "simple" relations and satisfy the requirement of completeness.

2. The space of initial parameters X is broken up into different subspaces according to some criterion; the partitions must be as independent as possible (with respect to realization of the sampling in the spaces). The system $\{F_i\}_b$ is used in the search for simple recognition relations in

1/2

APPROVED FOR RELEASE: 08/09/2001 CIA-RDP86-00513R002201520010-8"

"APPROVED FOR RELEASE: 08/09/2001 CIA-RDP86-00513R002201520010-8

USSR

KOTYUKOV, V. I., Vychisl. sistemy, vyp. 44, Novosibirsk, "Nauka", 1971, pp 23-34

each of these subspaces. Those subspaces in which there are no such relations are broken up further, etc. Thus the partition process is a kind of branching procedure.

3. If relations "of the same kind" are found in subspaces which are "adjacent" in some sense, then these subspaces are joined; based on the assumed nature of the subspace, certain operators are selected from the system $\{F_i\}_a$ which are then used in an attempt to "generalize" the "smaller" relations in the subspaces. V. Mikheyev.

2/2

APPROVED FOR RELEASE: 08/09/2001 CIA-RDP86-00513R002201520010-8"

"APPROVED FOR RELEASE: 08/09/2001 CIA-RDP86-00513R002201520010-8

USSR

UDC: 51:155.001.57:681.3.06

KOTYUKOV, V. I.

"Formation of Resolving Tags"

V sb. Vychisl. sistemy (Computer Systems--collection of works), vyp. 44, Novosibirsk, "Nauka", 1971, pp 37-48 (from RZh-Kibernetika, No 12, Dec 71, Abstract No 12V1004)

Translation: The author considers the problem of sequential formation of resolving tags for recognition. The formulation of the problem is presented together with a general description of the method of formation. The method is a sequential procedure which converges on finite sampling, a tag being sought at each step which gives the best recognition with respect to some still unrecognized teaching sample. A mathematical model is described for determining the confidence coefficient of reliable classification by the resultant resolving rule. V. Mikheyev.

1/1

APPROVED FOR RELEASE: 08/09/2001 CIA-RDP86-00513R002201520010-8"

"APPROVED FOR RELEASE: 08/09/2001 CIA-RDP86-00513R002201520010-8

USSR

UDC: 51:155.001.57:681.3.06

KOTYUKOV, V. I.

"Taxonomy in Boolean Space"

V sb. Vychisl. sistemy (Computer Systems--collection of works), vyp. 44, Novosibirsk, "Nauka", 1971, pp 35-36 (from RZh-Kibernetika, No 12, Dec 71, Abstract No 12V1012)

Translation: In this brief paper, the problem of taxonomy is considered for the case of "binary scales of denominations" $\{X_i\}$, where $X_i = \{1, 0\}$, $i = 1, \ldots, p$. The taxon is defined as a set of objects on which some relation F_j for distribution of the variables $\{X_i\}$ is satisfied. The general taxonomic resolving function F is represented as some superposition of functions F_j of the obtained taxa:

$$F = \varphi(F_j(x)),$$

where

$$F_j(x) = \begin{cases} 1, & x \in S_j, \\ 0, & x \bar{\in} S_j, \end{cases}$$

1/2

APPROVED FOR RELEASE: 08/09/2001 CIA-RDP86-00513R002201520010-8"

"APPROVED FOR RELEASE: 08/09/2001 CIA-RDP86-00513R002201520010-8

USSR

KOTYUKOV, V. I., Vychisl. sistemy, vyp. 44, Novosibirsk, "Nauka", 1971, pp 35-36

m is the number of taxa S_j, $j=1,\ldots,m$. The quantity m may be either known beforehand or unknown. V. Mikheyev.

2/2

APPROVED FOR RELEASE: 08/09/2001 CIA-RDP86-00513R002201520010-8"

"APPROVED FOR RELEASE: 08/09/2001 CIA-RDP86-00513R002201520010-8

1/2 016 UNCLASSIFIED PROCESSING DATE--27NOV70

TITLE--INVESTIGATION OF THE HIGH FREQUENCY ANTIFERROMAGNETIC RESONANCE BRANCH IN CSMNF SUB3 -U-

AUTHOR-(03)-BOROVIKROMANOV, A.S., KOTYUZHANSKIY, B.YA., PROZOROVA, L.A.

COUNTRY OF INFO--USSR

SOURCE--ZHURNAL EKSPERIMENTAL'NOY I TEORETICHESKOY FIZIKI, 1970, VOL 58, NR 6, PP 1911-1918

DATE PUBLISHED--------70

SUBJECT AREAS--PHYSICS

TOPIC TAGS--CESIUM COMPOUND, MANGANESE COMPOUND, FLUORIDE, CRYSTAL SYMMETRY, ANTIFERROMAGNETIC MATERIAL

CONTROL MARKING--NO RESTRICTIONS

DOCUMENT CLASS--UNCLASSIFIED

PROXY REEL/FRAME--2000/2229 STEP NO--UR/0056/70/058/006/1911/1918

CIRC ACCESSION NO--AP0125807

UNCLASSIFIED

APPROVED FOR RELEASE: 08/09/2001 CIA-RDP86-00513R002201520010-8"

"APPROVED FOR RELEASE: 08/09/2001 CIA-RDP86-00513R002201520010-8

2/2 016 UNCLASSIFIED PROCESSING DATE--27NOV70

CIRC ACCESSION NO--AP0125807

ABSTRACT/EXTRACT--(U) GP-0- ABSTRACT. A HIGH FREQUENCY AFMR BRANCH IS FOUND IN THE HEXAGONAL ANTIFERROMAGNETIC SUBSTANCE CSMNF SUB3 AND THE GAP OF THE BRANCH IS DETERMINED. THE TEMPERATURE DEPENDENCE OF THE GAP IS STUDIED AND IT IS SHOWN THAT AT HIGH TEMPERATURES IT CAN BE DESCRIBED BY THE BRILLOUIN FUNCTION. THE DEPENDENCE OF THE AFMR LINE SHAPE ON TEMPERATURE IS INVESTIGATED. THE AFMR SPECTRUM FOR CSMNF SUB3 IS CALCULATED ON BASIS OF THE EXPRESSION FOR A THERMODYNAMIC POTENTIAL SATISFYING THE CRYSTAL SYMMETRY. FACILITY: INSTITUT FIZICHESKIKH PROBLEM, AN SSSR.

UNCLASSIFIED

APPROVED FOR RELEASE: 08/09/2001 CIA-RDP86-00513R002201520010-8"

"APPROVED FOR RELEASE: 08/09/2001 CIA-RDP86-00513R002201520010-8

USSR UDC 681.326.3

KOTYUZHANSKIY, G. A., NISNEVICH, L. B., STETSYURA, G. G., and EPSHTEYN, V. L., Institute of Automation and Remote Control (Technical Cybernetics)

"A Data Transmission Device for Digital Computer Systems"

Moscow, Otkrytiya, izobreteniya, promyshlennyye obraztsy, tovarnyye znaki, No 3, Jan 71, Author's Certificate No 291199, Division G, filed 27 Nov 68, published 6 Jan 71, p 119

Translation: This Author's Certificate introduces a data transmission device for digital computer systems. The device includes a transmitter which incorporates a module for storage and bit-serial transmission of priority code. One output of this module is connected to the controlling input of a switch and an input of the output signal generator, the other input of the signal generator being connected to the information source, while the output is connected to the communications channel. The data transmission device also includes a receiver which incorporates an input stage whose reception input is connected to the communications channel, while its actuating input is connected to the source of information. As a distinguishing feature of the patent, in order to organize exchange of information between sources through a common communications channel and to eliminate mutual interference, the

APPROVED FOR RELEASE: 08/09/2001 CIA-RDP86-00513R002201520010-8"

"APPROVED FOR RELEASE: 08/09/2001 CIA-RDP86-00513R002201520010-8

USSR

KOTYUZHANSKIY, G. A., et al., Otkrytiya, izobreteniya, promyshlennyye obraztsy, tovarnyye znaki, No 3, Jan 71, Author's Certificate No 291199, Division G, filed 27 Nov 68, published 6 Jan 71, p 119

receiver also contains a module for detection of a "pause" in the communications channel, and a module for detecting a "one" signal. The inputs of these modules are connected to the input stage of the receiver. The output of the "pause" detection module is connected to the actuating input of the module for storage and bit-serial transmission of priority code. The output of the "one" signal detection module is connected through a switch to the deactivating input of the module for storage and bit-serial transmission of priority code, and the output of this module is connected to the source of information.

2/2

APPROVED FOR RELEASE: 08/09/2001 CIA-RDP86-00513R002201520010-8"

"APPROVED FOR RELEASE: 08/09/2001 CIA-RDP86-00513R002201520010-8

Acc. Nr: AP0040885 K

Ref. Code: UR 0103

PRIMARY SOURCE: Avtomatika i Telemekhanika, 1970, Nr / , pp 159-169

NUMERICAL MODEL FOR ESTIMATION OF PARAMETERS OF AUTOMATIC DATA PROCESSING SYSTEMS

~~Kotyuzhanskiy, G. A.~~; Nisnevich, L. B.; Stetsyura, G. G.; Tint, L. S.; Epshteyn, V. L.

There is presented a description of a specialized numerical model for the estimation of the electronic computer parameters (its memory volume, its productivity) and the choice of the discipline of data processing in designing one-machine automatic systems of data processing, functioning in real time.

REEL/FRAME
19750624

APPROVED FOR RELEASE: 08/09/2001 CIA-RDP86-00513R002201520010-8"

"APPROVED FOR RELEASE: 08/09/2001 CIA-RDP86-00513R002201520010-8

USSR UDC 539.311

KOTZ, V. M., LIPOVSKIY, D. YE., MOROZ, P. F. (Kharkov)

"The Stability of Cylindrical Shells in the Case of Uneven Combined Loading"

Kiev, Prikladnaya Mekhanika, Vol 6, No 12, Dec 70, pp 61-67

Abstract: A study is made of the stability of round cylindrical shells under the action of a radial pressure that is uneven along the perimeter, and axial loads, with account taken of initial geometrical imperfections. A comparison is made of the results of experimental and theoretical research. A study is made of the character of the wave formation after loss of stability for various loading variants. 3 figures, 1 table, 6 bibliographic entries.

1/1

APPROVED FOR RELEASE: 08/09/2001 CIA-RDP86-00513R002201520010-8"

"APPROVED FOR RELEASE: 08/09/2001 CIA-RDP86-00513R002201520010-8

1/2 018 UNCLASSIFIED PROCESSING DATE--16OCT70

TITLE--THE PHYSICO CHEMICAL FOUNDATIONS OF THE APPLICATION OF HIGH DISPERSED AEROSOLS FOR PEST CONTROL -U-

AUTHOR-(02)-KOVALSKIY, A.A., KOUTSENOGIY, K.N.

COUNTRY OF INFO--USSR

SOURCE--IZVESTIYA SIBIRSKOGO OTDELENIYA AKADEMII NAUK SSSR, NO 4, SERIYA KHIMICHESKIKH NAUK, 1970, NR 2, PP 3-12

DATE PUBLISHED--------70

SUBJECT AREAS--BIOLOGICAL AND MEDICAL SCIENCES

TOPIC TAGS--AEROSOL, PEST CONTROL

CONTROL MARKING--NO RESTRICTIONS

DOCUMENT CLASS--UNCLASSIFIED

PROXY REEL/FRAME--1994/0140 STEP NO--UR/0289/70/000/000/0003/0012

CIRC ACCESSION NO--AP0114536

UNCLASSIFIED

APPROVED FOR RELEASE: 08/09/2001 CIA-RDP86-00513R002201520010-8"

"APPROVED FOR RELEASE: 08/09/2001 CIA-RDP86-00513R002201520010-8

2/2 018 UNCLASSIFIED PROCESSING DATE--16OCT70

CIRC ACCESSION NO--AP0114536

ABSTRACT/EXTRACT--(U) GP-0- ABSTRACT. THE FEATURES OF THE APPLICATION OF HIGH DISPERSED AEROSOLS FOR PEST CONTROL IS DISCUSSED. THE ADVANTAGES OF THIS PEST CONTROL METHOD WAS SHOWN. THE CONCEPT DOSE (THE INTEGRAL OF CONCENTRATION OVER TIME) IS USED TO EXPLAIN THE REDUTION OF SPECIFIC EXPENSE OF INSECTICIDE WITH THE APPLICATION OF A POWERFUL AEROSOL GENERATOR. SUPPOSING THE COEFFICIENT OF THE TURBULENT DIFFUSION AND WIND ARE CONSTANT, THE DOSE AT VARIOUS DISTANCES FROM THE AEROSOL GENERATOR WAS CALCULATED. THE DOSE WAS ALSO MEASURED IN THE FIELD EXPERIMENTS. THE EXPERIMENTAL DATA ARE IN ACCORDANCE WITH CALCULATE.

FACILITY: INSTITUT KHIMICHESKOY KINETIKI I GORENIYA SO AN SSSR, NOVOSIBIRSK.

UNCLASSIFIED

APPROVED FOR RELEASE: 08/09/2001 CIA-RDP86-00513R002201520010-8"

"APPROVED FOR RELEASE: 08/09/2001 CIA-RDP86-00513R002201520010-8

USSR

UDC 624.07:534.1

BELINSKIY, B. P., KOUZOV, D. P., and CHEL'TSOVA, V. D. Leningrad

"On the Diffraction of Acoustic Waves on Plates Joined at a Right Angle"

Moscow, Prikladnaya Matematika i Mekhanika, Vol 37, No 2, Mar - Apr, 73, pp 291-299

Abstract: This article examines 2-dimensional stable acoustical processes within an infinite space filled with fluid and bounded by sides at a right angle. The desired solution is the pressure at which the Helmholtz equation will hold within the area while some conditions with high-order derivatives will hold at the boundaries. The expressions for the boundary operators are not made specific. An exact representation is found for the pressure in the case in which the sound field is stimulated by a point source located within the fluid. A number of specific problems in the diffraction of hydroacoustic waves by two mutually perpendicular sheets are examined.

1/1

APPROVED FOR RELEASE: 08/09/2001 CIA-RDP86-00513R002201520010-8"

"APPROVED FOR RELEASE: 08/09/2001 CIA-RDP86-00513R002201520010-8

Acc. Nr: AP0052304 K Ref. Code: UR0238

PRIMARY SOURCE: Fiziologichniy Zhurnal, 1970, Vol 16, Nr 1, pp 39

EFFECT OF PERIPHERAL ARTERIOVENOUS FISTULA AND LEFT STELLATE GANGLION STIMULATION ON CARDIAC OUTPUT AND ITS DISTRIBUTION IN DOGS

A. Kovach

Department of Experimental Researches, Medical Institute, Budapest, Hungary

Summary

Cardiac output depends on both venous return and contractility of the myocardium. Optimal filling pressure is a capacity function of the venous system and circulating blood volume. Contractility of the myocardium depends on metabolic, neural and humoral factors. Distribution of cardiac output in different vascular areas is a function of vascular resistance of some areas.

1/2

REEL/FRAME
19820872

2

APPROVED FOR RELEASE: 08/09/2001 CIA-RDP86-00513R002201520010-8"

"APPROVED FOR RELEASE: 08/09/2001 CIA-RDP86-00513R002201520010-8

AP0052304

Based on our experiments, the present paper deals with effects of two factors on cardiac output and its distribution: peripheral arteriovenous fistula and the effect of the left stellate ganglion stimulation.

The experiments were performed on dogs anaesthetized with chloralose.

Proceeding from the experiments we consider shunt circulation and physical factors, such as location, vectoral direction and angle of branching of the great arteries, might have a regulative role in the regulation of cardiac output and its distribution. This latter consideration has been verified by model experiments too.

19820873

APPROVED FOR RELEASE: 08/09/2001 CIA-RDP86-00513R002201520010-8"

"APPROVED FOR RELEASE: 08/09/2001 CIA-RDP86-00513R002201520010-8

USSR UDC [537.226+537.311.33]:[537+535]

KOVACH, B. P., and BORETS, A. N.

"Direct 'Forbidden' Transitions in $C_{2v}1$-$C_{2v}10$ Crystals"

V sb. Poluprovodn. elektronika (Semiconductor Electronics -- Collection of Works), Uzhgorod, 1971, pp 28-32 (from RZh-Fizika, No 10, Oct 71, Abstract No 10YE825 by YU. M. GAL'PERIN)

Translation: A theoretical investigation was made of the light absorption coefficient for direct "forbidden" transitions in crystals with the following variance law of the conduction band

$$E_j(k) = ak_x^2 + bk_y^2 + ck_z^2 \pm (\alpha k_x^2 + \beta k_y^2)^{1/2}$$

Such a variance law must be expected at most points of high symmetry of $C_{2v}1$-$C_{2v}10$ crystals. Since according to RZh-Fizika, 1966, Abstract No 9B413, no exciton ground state is formed in direct "forbidden" transitions, an investigation of such transitions makes it possible to discover "loop effect" and "effect of paired extrema" more reliably than in the investigation of allowed transitions. The authors calculated the light absorption coefficient, for which they obtained a general expression and at the same time analyzed a

1/2

APPROVED FOR RELEASE: 08/09/2001 CIA-RDP86-00513R002201520010-8"

"APPROVED FOR RELEASE: 08/09/2001 CIA-RDP86-00513R002201520010-8

USSR

KOVACH, B. P. and BORETS, A. N., Poluprovodn. elektronika, 1971, pp 28-32

number of particular cases. For these cases the frequency dependence of the absorption coefficient was constructed. The method of finding the "loop effect" and the "effect of paired extrema" was pointed out.

2/2

APPROVED FOR RELEASE: 08/09/2001 CIA-RDP86-00513R002201520010-8"

"APPROVED FOR RELEASE: 08/09/2001 CIA-RDP86-00513R002201520010-8

Acc. Nr. A70045130 Abstracting Service: 5/70 Ref. Code:
INTERNAT. AEROSPACE ABST. UR0020

A70-23168 # Application of the method of successive approximations to the integration of boundary layer equations (Primenenie metoda posledovatel'nykh priblizhenii k integrirovaniiu uravnenii pogranichnogo sloia). E. A. Kovach and G. A. Tirskii (Moskovskii Fiziko-Tekhnicheskii Institut, Moscow, USSR). *Akademiia Nauk SSSR, Doklady*, vol. 190, Jan. 1, 1970, p. 61-64. 6 refs. In Russian.

Description of a new variant of the method of successive approximations for numerical integration of two-dimensional equations for an asymptotically thin boundary layer with an arbitrary pressure gradient at which a solution to the problem exists. The distinguishing feature of the proposed approach lies in the construction of iterations in such a way that the (n + 1)-th approximation, in the case of an exact formulation of the problem of an asymptotic boundary layer, can be written in recurrent form in terms of the nth approximation so as to obtain a new numerical scheme from which the solution can be calculated to any desired degree of accuracy. A.B.K.

MT

1/1

21

REEL/FRAME
19780030

APPROVED FOR RELEASE: 08/09/2001 CIA-RDP86-00513R002201520010-8"

"APPROVED FOR RELEASE: 08/09/2001 CIA-RDP86-00513R002201520010-8

1/2 025 UNCLASSIFIED PROCESSING DATE--30OCT70

TITLE--PREPN. OF BISMUTH TELLURDIE IODIDE, AND SOME OF ITS OPTICAL PROPERTIES -U-

AUTHOR-(05)-CHEPUR, D.V., GORAK, YA.A., KOVACH, D.SH., TURYANITSA, I.D., BORETS, A.N.

COUNTRY OF INFO--USSR

SOURCE--IZV. AKAD. NAUK SSSR, NEORG, MATER. 1970, 6(2), 385-6

DATE PUBLISHED--------70

SUBJECT AREAS--CHEMISTRY, PHYSICS

TOPIC TAGS--BISMUTH, TELLURIDE, IODIDE, OPTIC PROPERTY, CHEMICAL PURITY, CHEMICAL SYNTHESIS, SINGLE CRYSTAL

CONTROL MARKING--NO RESTRICTIONS

DOCUMENT CLASS--UNCLASSIFIED

PROXY REEL/FRAME--1998/1345 STEP NO--UR/0363/70/006/002/0385/0386

CIRC ACCESSION NO--AP0121838

UNCLASSIFIED

APPROVED FOR RELEASE: 08/09/2001 CIA-RDP86-00513R002201520010-8"

"APPROVED FOR RELEASE: 08/09/2001 CIA-RDP86-00513R002201520010-8

2/2 025 UNCLASSIFIED PROCESSING DATE--30OCT70

CIRC ACCESSION NO--AP0121838

ABSTRACT/EXTRACT--(U) GP-0- ABSTRACT. BITEI SINGLE CRYSTALS WERE PREPD. AND THE CHARACTERISTIC ABSORPTION IN THE EDGE REGION WAS STUDIED. HIGH PURITY STARTING MATERIALS WERE USED FOR THE SYNTHESIS. BITEI WAS SYNTHESIZED FROM THE ELEMENTS TAKEN IN THE STOICHIOMETRIC RATIO AT 480DEGREES. THE SYNTHESIS IN EVACUATED QUARTZ AMPULS TOOK SEVERAL DAYS. THE SINGLE CRYSTALS WERE IN THE FORM OF EASILY CLEAVING PLATELETS. X RAY ANAL. CONFIRMED THAT THEY BELONG TO HEXAGONAL SYSTEM WITH A EQUALS 4.29 ANGSTROM; C EQUALS 6.75 ANGSTROM. PRELIMINARY STUDY OF THE ABSORPTION OF NONPOLARIZED IR SHOWED THAT CRYSTALS SIMILAR TO 10 MU THICK TRANSMIT SMALLER THAN OR EQUAL TO 10PERCENT. BECAUSE ABSORPTION INCREASES TOWARDS THE LONGER WAVELENGTHS, IT MAY BE CAUSED BY HIGH CONCN. OF FREE CARRIERS. THE DEPENDENCE OF THE ABSORPTION COEFF. ON THE SQUARE OF THE WAVELENGTH SEEMS TO CONFIRM THIS SUGGESTION. THE OBSD. ABSORPTION EDGE COULD BE CAUSED BY SIMPLE ALLOWABLE TRANSITIONS BETWEEN THE BANDS. FACILITY: UZHGOROD. GOS. UNIV., UZHGOROD, USSR.

UNCLASSIFIED

APPROVED FOR RELEASE: 08/09/2001 CIA-RDP86-00513R002201520010-8"

"APPROVED FOR RELEASE: 08/09/2001 CIA-RDP86-00513R002201520010-8

USSR

UDC 632.95

TRUKHLIK, S., DRABEK, I., [redacted], and GAGER, S.

"Metathion -- New Low-Toxicity Organophosphorus Insecticide"

V sb. Khimiya i primeneniya fosfororgan. soyedin. (Chemistry and Application of Organophosphorus Compounds -- Collection of Works), Moscow, "Nauka," 1972, pp 477-483 (from RZh-Khimiya, No 14, 25 Jul 72, Abstract No 14N440 by T. A. BELYAYEVA)

Translation: The article presents physical and chemical properties and methods of producing metathion (I), data on the hydrolysis of I in various media, and toxicity of the preparation for warm-blooded animals. Compound I consumption norms for various crops are indicated. Compound I can be used in fruit and vegetable growing and in viticulture to control the pests of ornamental plants and agricultural crops.

1/1

APPROVED FOR RELEASE: 08/09/2001 CIA-RDP86-00513R002201520010-8"

"APPROVED FOR RELEASE: 08/09/2001 CIA-RDP86-00513R002201520010-8

Acc. Nr. AA0031870

Abstracting Service: CHEMICAL ABST. 3-70

Ref. Code FR 0000

5

K

53879m Liquid fraction from wood smoke for the production of smoked food. Goblik, V. F.; Kotsur, V. G.; Repnyakova, V. A.; Mel'nikova, L. M.; Kovach, L. G.; Gorbatov, V. M.; Volovinskaya, V. P.; Krylova, N. N.; Lyaskovskaya, Yu. N. (All-Union Scientific Research Institute of the Meat Industry) Fr. 1,568,850 (Cl. A 23b), 30 May 1969, Appl. 03 Jan 1968; 2 pp.. The aq. condensate obtained from wood smoke is subjected to fractional distn. The 1st fraction, representing 15% of the total condensate is treated with activated C, followed by elution of the adsorbed substances with AcOH. The AcOH soln. thus obtained is added to the 2nd 15% fraction of the distillate to give a liq. to be used in the manuf. of smoked food. VNPF

di 2.

1/1

REEL/FRAME 19692018

APPROVED FOR RELEASE: 08/09/2001 CIA-RDP86-00513R002201520010-8"

"APPROVED FOR RELEASE: 08/09/2001 CIA-RDP86-00513R002201520010-8

UDC 615.849.112.015.4:612.54

USSR

KOVACH, R. I., Military Medical Academy imeni S. M. Kirov, Leningrad

"Calculation of Temperature Fields in Biological Objects Being Heated by Microwaves"

Moscow, Meditsinskaya Tekhnika, No 6, Nov/Dec 71, pp 12-16

Abstract: Although microwave heating is used extensively in physical therapy, there is as yet no general method by which a physician can predict the temperature of the tissues being treated. A model of a homogeneous biological object being heated by microwaves was developed, whose temperature can be found by a second order, linear differential equation for thermal conductivity. The temperatures obtained by plugging specific values of the parameters into the solution of this equation coincide very closely with temperatures obtained experimentally.

In order to allow for the fact that part of the heat is usually absorbed by the bloodstream, a nonlinear factor in which the rate of blood flow is linearly dependent on the temperature of the heated area was introduced into the original heat conductivity equation. An approximate solution to this new equation was obtained, a solution which yields results that do not vary by more than 10 percent from experimental results for selected values of B, the rate of blood flow.

1/1

APPROVED FOR RELEASE: 08/09/2001 CIA-RDP86-00513R002201520010-8"

"APPROVED FOR RELEASE: 08/09/2001 CIA-RDP86-00513R002201520010-8

UNCLASSIFIED PROCESSING DATE--02OCT70

1/2 038

TITLE--X RAY SOURCES IN MILITARY RADIO ELECTRONIC EQUIPMENT -U-

AUTHOR-(02)-YERMOLAYEV, YE.A., KOVACH, R.I.

COUNTRY OF INFO--USSR

SOURCE--VOENNO MEDITSINSKIY ZHURNAL, FEB. 1970, P 59-62

DATE PUBLISHED--------70

SUBJECT AREAS--ELECTRONICS AND ELECTRICAL ENGR., NUCLEAR SCIENCE AND TECHNOLOGY

TOPIC TAGS--BREMSSTRAHLUNG, X RAY, ELECTRONIC EQUIPMENT, MEASUREMENT, VACUUM TUBE, THYRATRON, KLYSTRON, X RAY EMISSION, SAFETY ENGINEERING, RADIATION PROTECTION

CONTROL MARKING--NO RESTRICTIONS

DOCUMENT CLASS--UNCLASSIFIED

STEP NO--UR/0177/70/000/002/0059/0062

PROXY REEL/FRAME--1990/2068

CIRC ACCESSION NO--AP0110000

UNCLASSIFIED

APPROVED FOR RELEASE: 08/09/2001 CIA-RDP86-00513R002201520010-8"

"APPROVED FOR RELEASE: 08/09/2001 CIA-RDP86-00513R002201520010-8

UNCLASSIFIED PROCESSING DATE--02OCT70

2/2 038

CIRC ACCESSION NO--AP0110000

ABSTRACT/EXTRACT--(U) GP-0- ABSTRACT. REVIEW OF PUBLISHED PAPERS CONCERNING X RAY BREMSSTRAHLUNG IN ELECTRONIC EQUIPMENT USED IN MILITARY INSTALLATIONS. METHODS OF MEASURING THESE EMISSIONS IN VARIOUS VACUUM ELECTRONIC DEVICES ARE DISCUSSED. THYRATRONS AND KLYSTRON AMPLIFIERS ARE INDICATED AS ESPECIALLY HAZARDOUS SOURCES OF X RAYS. RADIATION PROTECTION AND SAFETY STANDARDS DURING THE OPERATION OF THESE AND SIMILAR DEVICES ARE ALSO DISCUSSED.

UNCLASSIFIED

APPROVED FOR RELEASE: 08/09/2001 CIA-RDP86-00513R002201520010-8"

"APPROVED FOR RELEASE: 08/09/2001 CIA-RDP86-00513R002201520010-8

USSR

UDC: 621.396.367(047)

YERMOLAYEV, YE. A. and KOVACH, R.I.

"Sources of X-ray Radiation in Military Radio Electronic Apparatus; Review of the Literature"

Moscow, Voyenno-Meditsinskiy Zhurnal, No 2, 1970, pp 59-62

Abstract: Military radio electronic apparatus makes extensive use of vacuum and gas-filled electronic devices (kenotrons, thyratrons, oscillator tubes, etc.) based on an intense charged particle flux and high potential differences at the electrodes of hundreds of kilovolts. Retardation of the charged particles at the electrodes gives rise to bremsstrahlung. Hence some electric vacuum devices become sources of X-ray radiation. Thyratrons and klystrons which operate at high anode voltages and marked anode currents are particularly dangerous in this respect. Several ways of protecting personnel against bremsstrahlung are suggested.

1/1

APPROVED FOR RELEASE: 08/09/2001 CIA-RDP86-00513R002201520010-8"

"APPROVED FOR RELEASE: 08/09/2001 CIA-RDP86-00513R002201520010-8

UDC 621.315.59:[illegible]

USSR

DOVGOSHEY, N.I., KOVACH, YA.T., GRYABIL', I.A.

"Production Method, Electron Conduction, And Photosensitivity Of CdS_xSe_{1-x} ($0 \leqslant x \leqslant 1$) Films"

V sb. Poluprovodn. elektronika (Semiconductor Electronics--Collection Of Works), Uzhgorod, 1971, pp 71-85 (from RZh--Elektronika i Yeye Primeneniye, No 10, October 1971, Abstract No 10B118)

Translation: In order to obtain thin films of CdS_xSe_{1-x} ($0 \leqslant x \leqslant 1$), powders or crystals of CdS and CdSe were used, which were taken in various molar ratios. Amorphous, polycrystalline, and single crystals were used, possessing both non-orienting and orienting action. Thin films of CdS_xSe_{1-x} were obtained by the methods of thermal sputtering in a vacuum, "silk screening," and cathode sputtering. It is shown that films of a different composition prepared on cold substrates are of low resistance (ρ = 0.01--10 ohm. cm) and are practically non-photosensitive. The low resistivity is caused by an excess of Cd in the film. With an increase of the temperature of the substrates, the resistivity of the films is increased by several orders of magnitude and they become photosensitive. Heat treatment of these films at ~500° C and above over a period of 40--100 min leads to an abrupt reduction of their resistance and to a complete loss of

1/2

APPROVED FOR RELEASE: 08/09/2001 CIA-RDP86-00513R002201520010-8"

"APPROVED FOR RELEASE: 08/09/2001 CIA-RDP86-00513R002201520010-8

USSR

DOVGOSHEY, N. I., et al., Poluprovodn. elektronika (Semiconductor Electronics -- Collection of Works), Uzhgorod, 1971, pp 71-85 (from RZh--Elektronika i yeye primeneniye, No 10, October 1971, Abstract No 10B118)

their photosensitivity. The monocrystalline films CdS_xSe_{1-x} were grown on a fresh spalling of mica at 250° C and an average rate of growth of 100 Å/min. It is established that the resistivity of CdS_xSe_{1-x} films increases with a decrease of their thickness. 41 ref. I.Sh.

2/2

APPROVED FOR RELEASE: 08/09/2001 CIA-RDP86-00513R002201520010-8"

"APPROVED FOR RELEASE: 08/09/2001 CIA-RDP86-00513R002201520010-8

UDC 535.215.1:621.315.61.416

USSR

KOVACH, Ye. T., DOVGOSHEY, N. I., and CHEPUR, D. V.

"Photoelectric and Optical Properties of Thin Films of the System CdS_xSe_{1-x} $(0 \leq x \leq 1)$"

V sb. Poluprovodn. elektronika (Semiconductor Electronics -- Collection of Works), Uzhgorod, 1971, pp 97-120 (from RZh-Elektronika i yeye primeneniye, No 9, September 1971, Abstract No 9B413)

Translation: The photoelectric and optical properties are studied of thin films of $CdS_xS\ e_{1-x}$ obtained on substrates of glass, fuzed quartz, and mica by the method of thermal sputtering in a vacuum and by the "silk screen" method with subsequent thermal processing. Contacts of In, Al, and Cd were also applied by the method of thermal sputtering. The measuring device is described with which the voltampere, luxampere, spectral and frequency characteristics were studied, as well as the lifetime of carriers and the quantum yield of the photocurrent. The measurements were made in the temperature range of -100^0 C ÷ 300^0 C with the use of the appropriate cryostats. It is found that the spectral distriubtion of the photoconductivity and the luxampere characteristics depend on the technological conditions for producing the film. The voltampere characteristics were linear and practically did not depend on the production method. The long-time 1-90 min and the short-time 10^{-7} - 10^{-2} sec components of the photoconductivity relaxation were found, the ratio between which depends on

1/2

APPROVED FOR RELEASE: 08/09/2001 CIA-RDP86-00513R002201520010-8"

"APPROVED FOR RELEASE: 08/09/2001 CIA-RDP86-00513R002201520010-8

USSR

KOVACH, Ye. T., et al., Poluprovodn. elektronika (Semiconductor Electronics -- Collection of Works), Uzhgorod, 1971, pp 97-120 (from RZh-Elektronika i yeye primeneniye, No 9, September 1971, Abstract No 9B413)

the dark resistance of the specimen and the method of its production. A monotonic change was observed of the magnitude of the threshold energy which indicates that the specimens in question are a continuous series of solid solutions of replacement. Studies of the reflection and adsorption spectra shown that in thin films of CdS_xSe_{1-x} direct interzonsl junctions are most probable. 16 ill. 50 ref. G.Sh.

2/2

APPROVED FOR RELEASE: 08/09/2001 CIA-RDP86-00513R002201520010-8"

"APPROVED FOR RELEASE: 08/09/2001 CIA-RDP86-00513R002201520010-8

USSR

UDC 541.13.183

KOPINETS, I. F., KOVACH, Ye. T., MIKULANINETS, S. V., RUBESH, Z. D., and CHEPUR, D. V., Uzhgorod University

"Effect of Adsorption on Electrical and Photoelectric Properties of CdS_xSe_{1-x} Thin Films"

Tomsk, Izvestiya VUZ, Fizika, No 4, 1970, pp 41-44

Abstract: The effect of adsorption (as one of the factors effecting the state of the surface of thin films) of oxygen, water vapors, benzene, ethyl alcohol, and acetone on the electrical and photoelectric properties of a solid solution of CdS_xSe_{1-x} thin films was investigated. Experiments showed that the effect of adsorption on conductivity is a function of the thickness of the film, increasing as the thickness decreases. The adsorption kinetics also depends on the thickness of the layer: the thinner the layer, the more rapidly adsorption-desorption equilibrium occurs. Adsorption kinetics as a function of temperature was also noted: the rate of adsorption increases with temperature, probably indicating activated adsorption. The photocurrent and dark current increase under the absorption of oxygen and decrease under the absorption of benzene, acetone, ethyl alcohol, and water. The following explanation is given for these

1/2

APPROVED FOR RELEASE: 08/09/2001 CIA-RDP86-00513R002201520010-8"

"APPROVED FOR RELEASE: 08/09/2001 CIA-RDP86-00513R002201520010-8

USSR

KOPINETS, I. F., et al, Izvestiya VUZ, Fizika, No 4, 1970, pp 41-44

results: the increase in the thermoelectron work function under chemisorption of oxygen indicates that the chemisorbed oxygen is bonded with a "strong" n-bond or acceptor bond with the surface of the samples. Adsorption of benzene, acetone, ethyl alcohol, and water leads to a decrease in the thermoelectron work function, which fact is explained by their chemisorption of the "strong" p-bond type. This chemisorption leads to a charging on the surface for the positive charge and to a bending of the zones downward in the region near the surface, which condition leads to a decrease in the thermoelectron work function under chemisorption. These results are said to agree with the electron theory of catalysis of Vol'kenshteyn and with experimental results previously obtained by the authors.

2/2

APPROVED FOR RELEASE: 08/09/2001 CIA-RDP86-00513R002201520010-8"

"APPROVED FOR RELEASE: 08/09/2001 CIA-RDP86-00513R002201520010-8

USSR

UDC 517.946.2

KOVACH, YU. I., and BRYCH, I.V., Uzhgorod State University

"Approximative Integration of a Boundary Value Problem for a Nonlinear System of Differential Equations with Delayed Argument"

Kiev, Dopovidi Akademii Nauk Ukrains'koi RSR, Seriya A -- Fizyko-Tekhnichni ta Matematychni Nauky, No 11, Nov 70, pp 980-982

Abstract: The article considers the system

$$y_i^{(m_i)}(x) = f_i(x, y_1(x), \ldots, y_r(x), y_1(x-\tau_1(x)), \ldots, y_r(x-\tau_r(x))) = f_i[y_1, \ldots, y_r] \quad (i = 1, 2, \ldots, r),$$

where $m_i = 2k_i$ or $m_i = 2k_i + 1$, k_i are odd numbers, $\tau_i(x) \geqslant 0$ are continuous functions on the segment $[0, 1]$, with the boundary conditions

1/2

APPROVED FOR RELEASE: 08/09/2001 CIA-RDP86-00513R002201520010-8"

"APPROVED FOR RELEASE: 08/09/2001 CIA-RDP86-00513R002201520010-8

USSR

KOVACH, YU.I., and BRYCH, I.V., Dopovidi Akademii Nauk Ukrains'koi RSR, Seriya A -- Fizyko-Tekhnichni ta Matematychni Nauky, No 11, Nov 70, pp 980-982

$$y_i(0) = y_i^{(m_i-2p_i)}(0) = y_i^{(m_i-2p_i)}(1) = 0 \qquad (p_i = 1, 2, \ldots, k_i),$$

$$y_i(x) = \varphi_i(x), \quad x \in E_i = \{x - \tau_i(x) \leqslant 0\}, \quad \varphi_i(0) = \varphi_i^{(m_i-2p_i)}(0) = 0,$$

where $\varphi_i(x)$ are known from the class C^{m_i} on the initial set E_i of the initial function. It is shown that the results of the differential inequality theorem, as well as the law of bilateral approximative integration of problem (1), (2) depend on the even or odd parity of k_i, and therefore the two cases must be considered individually. A qualitative evaluation of the solution is given, and a bilateral iterative process of approximative integration is constructed.

2/2

APPROVED FOR RELEASE: 08/09/2001 CIA-RDP86-00513R002201520010-8"

"APPROVED FOR RELEASE: 08/09/2001 CIA-RDP86-00513R002201520010-8

UNCLASSIFIED PROCESSING DATE--27NOV70

1/2 009

TITLE--APPROXIMATE INTEGRATION OF A NONLINEAR SYSTEM OF HIGH ORDER DIFFERENTIAL TIME LAG EQUATIONS -U-

AUTHOR--KOVACH, YU.I.

K

COUNTRY OF INFO--USSR

SOURCE--AKADEMIIA NAUK UKRAINS'KOI RSR, DOPOVIDI, SERIIA A FIZIKO-TEKHNICHNI MATEMATICHNI NAUKI, VOL 32, APR, 1970, P. 312-315

DATE PUBLISHED--------70

SUBJECT AREAS--MATHEMATICAL SCIENCES

TOPIC TAGS--DIFFERENTIAL EQUATION, BOUNDARY VALUE PROBLEM, TIME

CONTROL MARKING--NO RESTRICTIONS

DOCUMENT CLASS--UNCLASSIFIED

PROXY REEL/FRAME--2000/1810 STEP NO--UR/0441/70/032/000/0312/0315

CIRC ACCESSION NO--AT0129422

UNCLASSIFIED

APPROVED FOR RELEASE: 08/09/2001 CIA-RDP86-00513R002201520010-8"

"APPROVED FOR RELEASE: 08/09/2001 CIA-RDP86-00513R002201520010-8

2/2 009 UNCLASSIFIED PROCESSING DATE--27NOV70

CIRC ACCESSION NO--AT0125422

ABSTRACT/EXTRACT--(U) GP-0- ABSTRACT. ANALYSIS OF THE INITIAL AND BOUNDARY VALUE PROBLEMS FOR A SYSTEM OF NONLINEAR HIGHER ORDER CANONICAL TYPE TIME LAG EQUATIONS. AN APPROXIMATE ITERATIVE TWO WAY INTEGRATION PROCEDURE IS DEVELOPED FOR THESE PROBLEMS. A QUANTITATIVE ANALYSIS OF THE SOLUTIONS OBTAINED IS INCLUDED. FACILITY: UZHGORODS'KII DERZHAVNII UNIVERSITET, UZHGOROD, UKRAINIAN SSR.

UNCLASSIFIED

APPROVED FOR RELEASE: 08/09/2001 CIA-RDP86-00513R002201520010-8"

"APPROVED FOR RELEASE: 08/09/2001 CIA-RDP86-00513R002201520010-8

UNCLASSIFIED PROCESSING DATE--02OCT70

1/3 . 042

TITLE--AUTOMATIC STATIONS FLY TO THE PLANETS -U-

AUTHOR--~~KUVAL, A.~~ K

COUNTRY OF INFO--USSR

SOURCE--MOSCOW, AVIATSIYA I KOSMONAVTIKA, NO. 2, 1970, PP. 27-29

DATE PUBLISHED--------70

SUBJECT AREAS--SPACE TECHNOLOGY, ASTRONOMY,ASTROPHYSICS

TOPIC TAGS--INTERPLANETARY PROBE, AUTOMATIC SPACE STATION, ATMOSPHERIC DRAG, VENUS PLANET, PLANETARY ATMOSPHERE, ATMOSPHERIC DENSITY

CONTROL MARKING--NO RESTRICTIONS

DOCUMENT CLASS--UNCLASSIFIED

PROXY REEL/FRAME--1992/1044 STEP NO--UR/0209/70/000/002/0027/0029

CIRC ACCESSION NO--AP0112183

UNCLASSIFIED

APPROVED FOR RELEASE: 08/09/2001 CIA-RDP86-00513R002201520010-8"

"APPROVED FOR RELEASE: 08/09/2001 CIA-RDP86-00513R002201520010-8

2/3 · 042 UNCLASSIFIED PROCESSING DATE--02OCT70

CIRC ACCESSION NO--AP0112183

ABSTRACT/EXTRACT--(U) GP-0- ABSTRACT. THE DECELERATION OF A VENUSIAN SPACE VEHICLE BY AN ENGINE WOULD REQUIRE A ROCKET STAGE OF VERY GREAT WEIGHT. IT IS MORE ADVANTAGEOUS TO USE ATMOSPHERIC DRAG FOR THIS PURPOSE. AS A RESULT OF A GREAT ENTRY VELOCITY AND THE GREAT DENSITY OF THE VENUSIAN ATMOSPHERE A VEHICLE IS SUBJECTED TO ACCELERATIONS OF SEVERAL HUNDRED G AND IS SURROUNDED BY A GAS HEATED TO A TEMPERATURE GREATER THAN 10,000DEGREES; FOR THIS REASON IT MUST HAVE A THICK INSULATION AND A TOUGH BODY. NEVERTHELESS, FROM WEIGHT CONSIDERATIONS THIS METHOD IS MORE RATIONAL THAN DECELERATION BY AN ENGINE. DUE TO INTENSE BRAKING IN THE UPPER LAYERS OF THE VENUSIAN ATMOSPHERE THE VELOCITY OF THE VEHICLE DECREASES RAPIDLY AND ITS TRAJECTORY APPROACHES THE VERTICAL. WITH A FURTHER DECREASE IN ALTITUDE ATMOSPHERIC DENSITY INCREASES RAPIDLY SO THAT VELOCITY CONTINUES TO DECREASE. HIGH TEMPERATURES AND PRESSURES BEGIN TO EXERT AN EFFECT; AT THE SURFACE THESE FACTORS ASSUME CRITICAL IMPORTANCE. SURFACE PRESSURE CAN EXCEED 100 ATM. EVEN ON THE DAYTIME SIDE THE RANGE OF VISIBILITY IS SHORT, INADEQUATE FOR PHOTOGRAPHY WITHOUT SPECIAL EQUIPMENT. EXPERIENCE WITH LANDING ON THE MOON IS INAPPLICABLE. THE FIRST REQUIREMENT FOR MAKING SUCH A LANDING IS A STABILIZATION OF THE STATION IN A VERTICAL POSITION. THIS IS DONE MOST EASILY WITH A PARACHUTE SYSTEM. THE PARACHUTE MUST BE ABLE TO OPERATE IN THE DENSEST LAYERS OF THE ATMOSPHERE. IMMEDIATELY UPON LANDING THE PARACHUTE MUST BE AUTOMATICALLY DETACHED BECAUSE STRONG WINDS BLOW AT THE VENUSIAN SURFACE AND COULD TOPPLE OVER, DRAG AND SMASH THE INSTRUMENT PACKAGE.

UNCLASSIFIED

APPROVED FOR RELEASE: 08/09/2001 CIA-RDP86-00513R002201520010-8"

"APPROVED FOR RELEASE: 08/09/2001 CIA-RDP86-00513R002201520010-8

3/3 042 UNCLASSIFIED PROCESSING DATE--02OCT70

CIRC ACCESSION NO--AP0112183

ABSTRACT/EXTRACT--A PROPER LANDING REQUIRES A KNOWLEDGE OF VENUSIAN MICRORELIEF. THE SURFACE COMPOSITION SHOULD BE KNOWN. AT PRESENT VIRTUALLY NOTHING IS KNOWN CONCERNING SURFACE COMPOSITION OR MICRORELIEF. RADAR OBSERVATIONS SHOW THAT THE SURFACE IS DOUBTLESSLY VERY HOT, DRY AND UNEVEN. MOUNTAINS MAY BE PRESENT. INFORMATION IS OBVIOUSLY INADEQUATE FOR RELIABLE DESIGNING OF A LANDING DEVICE. AND YET THE REQUIRED INFORMATION CAN BE OBTAINED ONLY BY MAKING A LANDING. THE STATION MUST WEIGH MORE THAN 272 KG. HOWEVER, EVEN IF THE STATION WEIGHS 1,000 KG AND IS SLIGHTLY EMBEDDED IN THE GROUND IT COULD BE OVERTURNED BY A WIND GUST OF 8-10 M PER SEC.

UNCLASSIFIED

APPROVED FOR RELEASE: 08/09/2001 CIA-RDP86-00513R002201520010-8"

"APPROVED FOR RELEASE: 08/09/2001 CIA-RDP86-00513R002201520010-8

1/3 049 UNCLASSIFIED PROCESSING DATE--16OCT70

TITLE--STELLAR ROADS -U-

AUTHOR--KOVAL, A.

COUNTRY OF INFO--USSR

SOURCE--MOSCOW, IZVESTIYA, 12 APRIL 1970, P 3

DATE PUBLISHED--12APR70

SUBJECT AREAS--BEHAVIORAL AND SOCIAL SCIENCES, SPACE TECHNOLOGY

TOPIC TAGS--ASTRONAUTICS, SPACE STATION, MANNED ORBITAL LABORATORY, SPACE PROGRAM

CONTROL MARKING--NO RESTRICTIONS

DOCUMENT CLASS--UNCLASSIFIED

PROXY REEL/FRAME--1993/1169 STEP NO--UR/9003/70/000/000/0003/0003

CIRC ACCESSION NO--AN0113902

UNCLASSIFIED

APPROVED FOR RELEASE: 08/09/2001 CIA-RDP86-00513R002201520010-8"

"APPROVED FOR RELEASE: 08/09/2001 CIA-RDP86-00513R002201520010-8

UNCLASSIFIED PROCESSING DATE--16OCT70

2/3 049

CIRC ACCESSION NO--AN0113902

ABSTRACT/EXTRACT--(U) GP-0- ABSTRACT. SPACE RESEARCH AND EXPLORATION HAS ENTERED INTO THE ERA OF ITS DEVELOPMENT IN WHICH IT IS NOT THE FACT OF FLIGHT ITSELF WHICH IS DECISIVE, BUT THE RESULTS WHICH CAN BE DRAWN FROM SPACE EXPERIMENTATION WHICH ARE USEFUL FOR SCIENTISTS AND PRACTICAL WORKERS. THIS IS NO ACCIDENT. MANKIND CANNOT ALLOW THAT THE EXPENSIVE AND COMPLEX SPACE TECHNOLOGY BE USED TO NO GOOD PURPOSE. THE OBJECTIVES OF COSMONAUTICS, STANDING ON THE PINNACLE OF HUMAN PROGRESS, ARE THE DISCOVERY OF THE MOST HIDDEN SECRETS OF NATURE, LEARNING ITS LAWS, MAKING USE OF ALL ITS ATTAINMENTS ASSOCIATED WITH SPACE TECHNOLOGY IN MAN'S PRACTICAL ACTIVITY. TODAY COSMONAUTICS IS FACED WITH THE FOLLOWING PROBLEMS: WHAT SHOULD MANKIND'S OBJECTIVES BE IN THE CONQUEST OF SPACE? WHAT MEANS SHOULD BE USED IN ATTAINING THESE OBJECTIVES? HOW IS IT BEST TO USE THESE MEANS? SOLUTION OF THESE PROBLEMS IS NO EASY MATTER AND SCIENTISTS IN MANY COUNTRIES ARE WORKING IN THESE FIELDS. ONE THING IS CLEAR. IT IS MOST EFFECTIVE TO FOLLOW THAT PATH OF DEVELOPMENT OF SPACE TECHNOLOGY WHICH COMBINES OBTAINING THE MAXIMUM AMOUNT OF SCIENTIFIC INFORMATION WITH THE SOLUTION OF PRACTICAL PROBLEMS SUCH AS EVEN TODAY ARE BRINGING ENORMOUS ADVANTAGES TO MANKIND. CERTAINLY ORBITAL STATIONS ARE IN THIS CATEGORY. KONSTANTIN EDUARDOVICH TSIOLKOVSKIY WROTE MUCH CONCERNING THEM. WITH RESPECT TO EFFICIENCY FOR SCIENCE AND PRACTICAL WORKERS THEY HAVE NO EQUAL AMONG THE OTHER TYPES OF SPACE VEHICLES. THAT IS WHY THE WORLD'S FIRST EXPERIMENTAL ORBITAL STATION WAS CREATED BY OUR COUNTRY IN 1969. THIS STATION WAS A QUITE SOLID SPACE STRUCTURE.

UNCLASSIFIED

APPROVED FOR RELEASE: 08/09/2001 CIA-RDP86-00513R002201520010-8"

"APPROVED FOR RELEASE: 08/09/2001 CIA-RDP86-00513R002201520010-8

3/3 049 UNCLASSIFIED PROCESSING DATE--16OCT70

CIRC ACCESSION NO--AN0113902

ABSTRACT/EXTRACT--IT HAD FOUR INDIVIDUAL LIVING ROOMS WITH A TOTAL VOLUME OF 18 CUBIC METERS. THE FREE VOLUME MADE IT POSSIBLE TO CREATE CONVENIENT CONDITIONS FOR WORK AND REST OF COSMONAUTS. THE EXPERIENCE OF OPERATING THE FIRST ORBITAL STATION IN SPACE REVEALED THAT THE SCIENTIFIC WORK OF THE RESEARCHERS ABOARD (THE STATION CREW CONSISTED OF FOUR MEN) WAS EXCEEDINGLY EFFECTIVE AND IT WAS POSSIBLE TO CONDUCT A WIDE VARIETY OF COMPLEX EXPERIMENTS. IN THE FUTURE ORBITAL STATIONS WILL HAVE VERY BROAD SCIENTIFIC AND PRACTICAL IMPORTANCE. THE CREW SIZE AND TIME IN ORBIT WILL BE CONSIDERABLY INCREASED. THERE WILL BE ENTIRE LABORATORIES AND EVEN INSTITUTES IN SPACE. WITH RESPECT TO SUCH STATIONS AND TRANSPORT WHIPS WHICH WILL CRUISE BETWEEN THE EARTH AND THESE STATIONS IT IS VERY IMPORTANT TO SOLVE THE PROBLEM OF INCREASING THE PROFITABILITY OF ROCKET SPACE TECHNOLOGY. FIRST THE LIFETIME OF SYSTEMS, ASSEMBLIES AND COMPLEXES MUST BE INCREASED (TO SEVERAL YEARS) AND APPARATUS MUST BE DEVELOPED WHICH IS SUITED FOR MULTIPLE USE. AVIATION FOLLOWED THIS PATH AND IT IS INEVITABLE FOR COSMONAUTICS.

UNCLASSIFIED

APPROVED FOR RELEASE: 08/09/2001 CIA-RDP86-00513R002201520010-8"

"APPROVED FOR RELEASE: 08/09/2001 CIA-RDP86-00513R002201520010-8

USSR UDC 632.95

SHIRANKOV, D. F., RUDAVSKIY, V. P., and KOVAL', A. A.

"A Herbicide"

USSR Author's Certificate No 337111, filed 17 Aug 70, published 1 Jun 72 (from RZh-Khimiya, No 10, May 73, Abstract No 10N607P by T. Ya. Ogibina)

Translation: It is proposed that alkyl ethers of N-dialkyl phosphono-α,α-dichloroiminocarboxylic acids of the formula $RCCl_2C(OR')=NP(O)(OR'')OR'''$ (I) (R = alkyl-C_1-C_3, R', R'', R''' = Me, Et, Pr or Bu) made on the basis of plentiful raw material (nitriles of carboxylic acids, PCl_3, Cl_2 and alcohols) be used as a herbicide. The tested substances are used in the form of acetone solutions in a concentration of 0.1, 0.5, and 1%. Examples are given of testing of herbicidal activity on mono- and dicotyledons with application to the soil and spraying. Germinating capacity of seeds is determined, and the length of the stalk and root is measured. The maximum effect was achieved by spraying the plants. The nature of the action of the chemicals is totally destructive. Compounds I (R = Et, R' = R'' = R''' = Bu) and I (R = Pr, R' = = R'' = R''' = Bu) are destructive of monocotyledons in a dose of 1 kg/ha.

1/1

APPROVED FOR RELEASE: 08/09/2001 CIA-RDP86-00513R002201520010-8"

"APPROVED FOR RELEASE: 08/09/2001 CIA-RDP86-00513R002201520010-8

UDC 632.95

USSR

SMOLINA, A. A.I., SHOMOVA, Ye. A., RUDAVSKIY, V. P., KOVAL', A. A., SHCHEVCHENKO, V. I.

"Insecticidal and Fungicidal Activity of Esters of N-carbacylamido Phosphoric Acids"

Fiziol. aktivn. veshchestva. Resp. mezhved. sb. (Physiologically Active Materials. Republic Interdepartmental Collection), 1972, vyp. 4, pp 19-22 (from RZh-Khimiya, No 5 (II), 1973, Abstract No 5N578)

Translation: The results are presented from testing compounds containing residues of phosphoric and halogen carboxylic acids $RC(OR') = NPO(OR')_2$ (R = CCl_3, CF_3, $R''CCl_2$, R'' = alkyl) and $R'''CCl_2CONHPO(OR'')_2$ (R''' = alkyl) simultaneously for contact insecticidal activity against Calandra oguzae L., Drosophila S. P. and fungicidal toxicity in pure cultures of Fusicladium dendriticum (Wallr.(Fusk., Verticillium dahliae Rleb. $MeCCl_2C(OEt) = NOP(OEt)_2$, $EtCCl_2C(OEt) = NPO(OEt)_2$, $PrCCl_2C(OEt) = NPO(OEt)_2$ cause 100% destruction of Drosophila S. P. with 5 and 10% concentration of the solution in acetone after 24 hours. The tested compounds demonstrate very weak fungicidal activity.

1/1

APPROVED FOR RELEASE: 08/09/2001 CIA-RDP86-00513R002201520010-8"

"APPROVED FOR RELEASE: 08/09/2001 CIA-RDP86-00513R002201520010-8

USSR UDC 632.95

SHIRANKOV, D. F., SHEVCHENKO, V. I., KOVAL', A. A., and RUDAVSKIY, V. P.,
Institute of Organic Chemistry, Kiev, Academy of Sciences Ukrainian SSR

"Herbicide"

USSR Authors' Certificate No 246960, filed 11 Apr 67, published 13 Jan 70
(from RZh-Khimiya, No 20 (II), 25 Oct 70, Abstract No 20 N626P by S. LYUBLINSKAYA)

Translation: Compounds of the general formula $X_3CC(OR) = NP(O)(OR)_2$ (I; X = Cl, F; R = C_1 — C_5-alkyl) did not act on plants when applied to the soil. When sprayed on plants in a dose of 5-10 kg/ha, I's (R = Pr, n-C_5H_{11}; X = Cl and R = Bu, X = F) suppress radishes and buckwheat 70-85% and do not harm oats and wheat.

1/1

APPROVED FOR RELEASE: 08/09/2001 CIA-RDP86-00513R002201520010-8"

"APPROVED FOR RELEASE: 08/09/2001 CIA-RDP86-00513R002201520010-8

USSR UDC: 547.241

FESHCHENKO, N. G., KOVAL', A. A., KIRSANOV, A. V., Institute of Organic Chemistry, Academy of Sciences of the Ukrainian SSR

"Alkyl-Chloride and Alkyl-Bromide Alkylation of Red Phosphorus"

Leningrad, Zhurnal Obshchey Khimii, Vol 40 (102), No 11, Nov 70, pp 2385-2387

Abstract: The authors investigate the reaction of octyl and decyl chlorides, and of hexyl, octyl, decyl and dodecyl bromides with red phosphorus in the presence of iodine. Tertiary phosphine oxides, and phosphinic and phosphonic acids are isolated after treating the reaction products with alkali. The basic reaction products are tertiary phosphine oxides. The situation is reversed by adding phosphoric acid to the reagents, which makes phosphinic and phosphonic acids the basic reaction products with a reduction in oxide yield to 5-15%. Thus the alkylation reaction can be used to synthesize both tertiary phosphine oxides and phosphinic and phosphonic acids.

1/1

APPROVED FOR RELEASE: 08/09/2001 CIA-RDP86-00513R002201520010-8"

"APPROVED FOR RELEASE: 08/09/2001 CIA-RDP86-00513R002201520010-8

USSR UDC: 621.396.6-181.5

ZAIKA, V. V., KOVAL', A. A.

"Tunable Nonhomogeneous RC Structures With Distributed Parameters"

V sb. Poluprovodn. pribory v tekhn. elektrosvyazi (Semiconductor Devices in Technical Electrical Communications--collection of works), Moscow, "Svyaz'", 1970, pp 142-144 (from RZh-Radiotekhnika, No 1, Jan 71, Abstract No 1V204)

Translation: The paper presents the results of an experimental check on the theoretical characteristics of RC systems with distributed parameters showing the advantage of nonhomogeneous systems over homogeneous systems. One illustration, bibliography of four titles. Resumé.

1/1

APPROVED FOR RELEASE: 08/09/2001 CIA-RDP86-00513R002201520010-8"

"APPROVED FOR RELEASE: 08/09/2001 CIA-RDP86-00513R002201520010-8

UDC 546.185

USSR

SHEVCHENKO, V. I., KOVAL', A. A., and PISANENKO, N. P.

"Phenoxylation of Trichlorophosphazo-1,1,2,2-tetrachloroalkanes and N-Dichlorophosphonyl-2,2-dichloroiminocarboxylic Acid Chlorides"

Leningrad, Zhurnal Obshchey Khimii, Vol 40, No 5, May 70, pp 1005-1010

Abstract: Trichlorophosphazo-1,1,2,2-tetrachloroalkanes react with phenols at 80-130° to give triaroxyphosphazo-1,1,2,2-tetrachloroalkanes, which split at 130-170° into 2,2-dichlorocarbonitriles and triaroxydichlorophosphorus. Triaroxyphosphazo-1,1,2,2-tetrachloroalkanes are hydrolyzed with water to give 2,2-dichlorocarbonitriles and triaryl phosphates. The same compounds are obtained by the interaction of trichlorophosphazo-1,1,2,2,-tetrachloroalkanes with an excess of phenols at 130-170°. N-dichlorophosphonyl-2,2-dichloroiminocarboxylic acid chlorides react with phenols in the presence of triethylamine or with sodium arylates to give aryl esters of N-diaroxyphosphonyl-2,2-dichloroiminocarboxylic acids, which are readily hydrolyzed

1/2

APPROVED FOR RELEASE: 08/09/2001 CIA-RDP86-00513R002201520010-8"

"APPROVED FOR RELEASE: 08/09/2001 CIA-RDP86-00513R002201520010-8

USSR

SHEVCHENKO, V. I., et al., Zhurnal Obshchey Khimii, Vol 40, No 5, May 70, pp 1005-1010

with water or atmospheric moisture to give stable diaryl esters of 2,2-dichlorocarbacylamidophosphoric acids.

The authors thank A. V. KIRSANOV for his advice.

2/2

APPROVED FOR RELEASE: 08/09/2001 CIA-RDP86-00513R002201520010-8"

"APPROVED FOR RELEASE: 08/09/2001 CIA-RDP86-00513R002201520010-8

UDC 547.412.74 + 547.464.7

USSR

KUKHAR', V. P., and KOVAL', A. A., Institute of Organic Chemistry, Kiev, Academy of Sciences Ukrainian SSR

"Interaction of α,α'-Bistrichlorophosphazo-α, α, β, β, α', α', β', β'-octachloroalkanes With Alcohols"

Leningrad, Zhurnal Obshchey Khimii, Vol 40, No 4, Apr 70, pp 776-781

Abstract: α,α'-Bistrichlorophosphazo-α,α,β,β,α',α',β',β'-octachloroalkanes react with primary alcohols at a molar ratio of 1 : 8 to give dialkyl esters of N,N'-bisdialkoxyphosphonyl-α,α,α',α'-tetrachloro-α,α'-bisiminocarboxylic acids (I). The latter react with alcohols in the presence of hydrogen chloride at 80° to give diesters of α,α,α',α'-tetrachloro-α,α'-dicarboxylic acids, as well as reacting with ammonia or dimethylamine to give diamidines of N,N'-bisdialkoxyphosphonyl-α,α,α',α'-tetrachloro-α,α'-dicarboxylic acids. Dialkyl esters (I) are hydrolyzed with water at 20-25° to give diamides of N,N'-bisdialkoxyphosphonyl-α,α,α',α'-tetrachloro-α,α'-dicarboxylic acids. The interaction of the bisphosphazo com-

1/2

APPROVED FOR RELEASE: 08/09/2001 CIA-RDP86-00513R002201520010-8"

"APPROVED FOR RELEASE: 08/09/2001 CIA-RDP86-00513R002201520010-8

USSR

KUKHAR', V. P., and KOVAL', A. A., Zhurnal Obshchoy Khimii, Vol 40, No 4, Apr 70, pp 776-781

pounds with secondary alcohols was studied, using isopropyl alcohol. It was found that diamides of N,N'-bis-diisopropoxyphosphonyl-α,α,-α',α'-tetrachloro-α,α'-dicarboxylic acids are obtained with a molar ratio of 1 : 8. The authors thank V. I. SHEVCHENKO for his advice and assistance.

2/2

APPROVED FOR RELEASE: 08/09/2001 CIA-RDP86-00513R002201520010-8"

"APPROVED FOR RELEASE: 08/09/2001 CIA-RDP86-00513R002201520010-8

1/3 014 UNCLASSIFIED PROCESSING DATE--27NOV70

TITLE--REACTION OF ALPHA,ALPHA PRIME BISTRICHLOROPHOSPHAIO ALPHA,ALPHA,BETA,BETA,ALPHA PRIME, ALPHA PRIME, BETA PRIME, BETA PRIME

AUTHOR-(02)-KUKHAR, V.P., KOVAL, A.A.

COUNTRY OF INFO--USSR

SOURCE--ZH. OBSHCH. KHIM. 1970, 40(4), 776-81

DATE PUBLISHED--------70

SUBJECT AREAS--CHEMISTRY

TOPIC TAGS--CHLORINATED ORGANIC COMPOUND, AZO COMPOUND, ORGANIC PHOSPHORUS COMPOUND, AMMONIUM CHLORIDE, COMPLEX COMPOUND, AMINE DERIVATIVE, ALKANE

CONTROL MARKING--NO RESTRICTIONS

DOCUMENT CLASS--UNCLASSIFIED

PROXY REEL/FRAME--3006/1480 STEP NO--UR/0079/70/040/004/0776/0781

CIRC ACCESSION NO--AP0135146

UNCLASSIFIED

APPROVED FOR RELEASE: 08/09/2001 CIA-RDP86-00513R002201520010-8"

"APPROVED FOR RELEASE: 08/09/2001 CIA-RDP86-00513R002201520010-8

2/3 014 UNCLASSIFIED PROCESSING DATE--27NOV70

CIRC ACCESSION NO--AP0135146

ABSTRACT/EXTRACT--(U) GP-0- ABSTRACT. ADDING 8 MOLES ROH TO 1 MOLE (CH SUB2) SUBN (CCL SUB2 CCL SUB2 N:PCL SUB3) SUB2 (I) IN C SUB6 H SUB6 GAVE, AFTER BRIEF HEATING TO EXPEL HCL, 90-5PERCENT (CH SUB2) SUBN (CCL SUB2 C(OR):NPO(OR) SUB2) SUB2 (IA) (N 2) (R SHOWN)II ME, M. 56-70EGREES; ET, B SUB0.04 96-8DEGREES, N PRIME20 SUBD 1.4633; N EQUALS 4: ME, B SUB0.04 120-2DEGREES, 1.4709; ET, M. 36-7DEGREES; N EQUALS 5: ME, B SUB0.03 117-19DEGREES, 1.4705; ET, B SUB0.03 126-8DEGREES, 1.4745; N EQUALS 6: ME, M. 71-2DEGREES; AND ET, B SUB0.04 144-7DEGREES, 1.4728. THE YIELDS WERE ABOUT 70PERCENT OF DISTD., PUREPRODUCTS. ALTERNATIVELY, THESE WERE PREPD. FROM (CH SUB2) SUBN (CCL SUB2 CCL:NPOCL SUB2) SUB2 AND ROH AFTER BRIEF REFLUXING IN C SUB6 H SUB6. THE RESULTING ESTERS TREATED WITH DRY HCL IN ROH AT REFLUX 1 HR. GAVE AFTER SEPN. OF 90-5PERCENT NH SUB4 CL, SOME (RO) SUB3 PO FOLLOWED BY (CH SUB2) SUBN (CCL SUB2 CO SUB2 R) SUB2 (II) IN GOOD YIELD; THE OVERALL EQUATION IS I PLUS 12 ROH YIELDS 4HCL PLUS 4RCL PLUS 2NH SUB4 CL PLUS 2 PO(OR) SUB3 PLUS II. ALTERNATIVELY, ADDING 0.05 MOLE I TO 1 MOLE REFLUXING ROH IN C SUB6 H SUB6, HEATING 1 HR LONGER, FILTERING, AND DISTG, GAVE II IN A SINGLE OPERATION. IA TREATED WITH DRY NH SUB3 WITH ICE COOLING IN C SUB6 H SUB6 GAVE (CH SUB2) SUBN (CCL SUB2 C(NH SUB2):NPO(OR) SUB2) SUB2: N EQUALS 2: R EQUALS ME, M. 182-4DEGREES; ET, M. 115-16DEGREES; N EQUALS 4: R EQUALS ME, M. 157-90EGREES; ET, M. 93-4DEGREES; WITH ME SUB2 NH THERE WERE FORMED (CH SUB2) SUBN (CCL SUB2 C(NME SUB2): NPO(OR) SUB2) SUB2: N EQUALS 2; R EQUALS ME, M. 170-2DEGREES; N EQUALS 4; R EQUALS ME, M. 120-1DEGREES.

UNCLASSIFIED

APPROVED FOR RELEASE: 08/09/2001 CIA-RDP86-00513R002201520010-8"

"APPROVED FOR RELEASE: 08/09/2001 CIA-RDP86-00513R002201520010-8

3/3 014 UNCLASSIFIED PROCESSING DATE--27NOV70

CIRC ACCESSION NO--AP0135146

ABSTRACT/EXTRACT--IA KEPT OVERNIGHT WITH H SUB2 O GAVE UP TO 96PERCENT AMIDES (CH SUB2) SUBN (CCL SUB2 CONHPO(OR) SUB2) SUB2: N EQUALS 1: R EQUALS ME, M. 189-90DEGREES; ET, M. 161-2DEGREES; PR, M. 137-8DEGREES; ISO-PR, M. 150-1DEGREES; N EQUALS 2; R EQUALS ME M. 214-15DEGREES; ET, M. 189-90DEGREES; ISO-PR, M. 187DEGREES; N EAUALS 3: R EQUALS ME, M. 139-40DEGREES; ET, M. 129-30DEGREES; N EQUALS 4: R EQUALS ME, M. 170-2DEGREES; ET, M. 124-5DEGREES; N EQUALS 5: R EQUALS ME, M. 126-7DEGREES; N EQUALS 6: R EQUALS ME, M. 160-2DEGREES; AND ET, M. 115-17DEGREES. THE SAME WERE FORMED FROM I BY HEATING WITH ISO-PROH IN C SUB6 H SUB6 1 HR. THE DIAMIDES TITRATED WITH NAOH (PHENOLPHTHALEIN) GAVE THE NA SALTS (CH SUB2) SUBN (CCL SUB2 CONPO(OR) SUB2) SUB2 NA SUB2: N EQUALS 2: R EQUALS ME, M. 222-4DEGREES; ET, M. 197-8DEGREES; N EQUALS 3: ME, M. 182-3DEGREES; ET, M. 183-5DEGREES; N EQUALS 4: ME, M. 196-7DEGREES; ET, M. 205-6DEGREES; N EQUALS 6: ME, M. 176-7DEGREES.

FACILITY: INST. ORG. KHIM., KIEV, USSR.

UNCLASSIFIED

APPROVED FOR RELEASE: 08/09/2001 CIA-RDP86-00513R002201520010-8"

"APPROVED FOR RELEASE: 08/09/2001 CIA-RDP86-00513R002201520010-8

Acc. Nr. AP0036334 Abstracting Service: CHEMICAL ABST. 4-70 Ref. Code UR 0068 4

K

69809z Welding conditions and corrosion resistance of welded seams. Klochkov, A. I.; Emel'yanova, V. P.; Dobrovolskii, I. P.; Koval, A. B.; Gribanov, L. F.; Grigor'ev, N. P.; Kitshevskii, G. E.; Sachanova, V. V. (Chelyabinsk Politekh. Inst., Chelyabinsk, USSR). *Koks Khim.* 1970, (1), 50-2 (Russ). The corrosion resistance of welds depends on the type of the welding process applied, on the electrode type, on the compn. of additives, on addnl. thermal treatment, and on the cooling of the seam. For min. corrosion in connections and app. for sulfate plants the following procedure is recommended: in arc welding the A-type electrode (C 0.11, Mn 0.9-1.5, Si 0.6-1.1, Cr 16.5-19.5, Ni 7.8-10.0, Mo 1.7-1.5, S 0.02 and P 0.03%) should be preferentially used with Mo as additive. The max. current intensity is 110 A for the welding in Ar atm. with addnl. rod of 1Kh18N9T steel (C ≤ 0.12, Mn 1-2, Si ≤ 0.80, Cr 17-19, Ni 8-9.5, Ti (C −0.02) × 5-0.7, S ≤ 0.02, P ≤ 0.035%). Z. Starbucek

1/1

18

REEL/FRAME 19721172

APPROVED FOR RELEASE: 08/09/2001 CIA-RDP86-00513R002201520010-8"

"APPROVED FOR RELEASE: 08/09/2001 CIA-RDP86-00513R002201520010-8

USSR

KOVAL', A. D., VYaGIN, G. I., ROBKOV, V. V., KLIMOVSKIY, Yu. A., STRAL'CHENKO, S. S., and FOGEL', Ya. M., Khar'kov State University, imeni A. M. Gor'kiy

"On the Question of the Difference in Composition of Charged and Neutral Particles Knocked out of Gallium Arsenide by a Beam of Ar^+ Ions"

Leningrad, Zhurnal Tekhnicheskoy Fiziki, Vol 43, No 8, Aug 73, pp 1753 - 1754

Abstract: A previous study in which Ar^+ particles had an energy of 2 kev showed that the positively charged secondary particles were primarily Ga^+_n ions and complexes, with As_n^+ particles being 2 - 3 orders of magnitude less frequent, while the neutral secondary particles were all arsenic atoms or complexes. Two types of gallium arsenide crystals were used as targets, (100) and (111), with no discernible difference in the distribution of secondary particles ejected between the two types. It is theorized that the difference in distribution is related to processes between the departing secondary particles and the surface of the solid and that these processes are determined by the velocity of the departing particles and the relative arrangement of energy zones of the solid body and excited levels of the particles.

The present work extends this investigation, using a beam of Ar^+ particles at 25 kev. The spectrum of the emitted particles in the visible light range was recorded. It consisted entirely of two resonance lines of GaI at 4172 and 4033 angstroms. These were found to be produced by Ga particles at energies on the

1/2

APPROVED FOR RELEASE: 08/09/2001 CIA-RDP86-00513R002201520010-8"

"APPROVED FOR RELEASE: 08/09/2001 CIA-RDP86-00513R002201520010-8

USSR

KOVAL', A. D. et al., Leningrad, Zhurnal Tekhnicheskoy Fiziki, Vol 43, No 8, pp 1753 - 1754

order of 2 - 3 kev. This is understandable, since the resonance level at 3.1 ev of the Ga atom, the transition from which to the base level produces fast excited Ga particles, is in resonance with a zone of free conductivity levels of the GaAs monocrystal, leading to a high probability of resonance ionization, while a significant portion of the levels of the As atom is in resonance with a forbidden zone of the crystal, making resonance ionization unlikely for these atoms. The neutral, emitted As atoms radiate in the vacuum ultraviolet and were not recorded in the experimental spectrum. Resonance ionization can occur for As atoms at an energy level of 7.6 ev, but only a small percentage reaches this level.

2/2

APPROVED FOR RELEASE: 08/09/2001 CIA-RDP86-00513R002201520010-8"

"APPROVED FOR RELEASE: 08/09/2001 CIA-RDP86-00513R002201520010-8

Composite Materials

UDC 669.71'782'3

USSR

KOVAL', A. D., NATAPOV, YE. B., LEZHENKO, G. G., SEYN. V. I., SHEGAY, A. A., and SHMAKOV, A. M., Zaporozh'ye Machine Building Institute, Department of Physical Metallurgy

"Molybdenum and Tungsten Fibers as a Strengthener of a Heat-Resistant Composite"

Ordzhonikidze, Izvestiya Vysshikh Uchebnykh Zavedeniy--Chernaya Metallurgiya, No 4, 1973, pp 153-155

Abstract: This work was conducted to study certain mechanical properties of wire, made at the Uzbek Refractory and Heat-Resistant Materials Combine (URHRMC), and the American alloy TZM, and to explain the possibilities of realizing the strength of molybdenum wire in a composite. Materials for this study were molybdenum and tungsten wires grades MCh and MK, made at URHRMC, experimental wire ChZM, and tungsten wire grade VA. A matrix of alloy EI435 was used with filler wire 0.5 mm in diameter. Volume content of wire in the alloy was 24%. Results of determining tensile strength showed that wire MCh had the lowest mechanical properties at 800-1200°C. Experimental alloy ChZM surpasses the short-time strength of molybdenum alloys TZM, MCh, MK and ChZM (not heat treated) after heat treatment. Tensile strength of EI435+30% MCh at 1100°C in the initial state and after annealing for 500 hours was 11-14 kg/mm^2. The

1/2

APPROVED FOR RELEASE: 08/09/2001 CIA-RDP86-00513R002201520010-8"

"APPROVED FOR RELEASE: 08/09/2001 CIA-RDP86-00513R002201520010-8

USSR

KOVAL', A. D., et al., Izvestiya Vysshikh Uchebnykh Zabedeniy--Chernaya Metallurgiya, No 4, 1973, pp 153-155

following table shows the tensile strengths and short-time strengths of EI435 with different combinations of wire filler:

	TS(1100°C)	STS(1200°C)
EI435+30% MCh	13.6 kg/mm2	---
EI435+24% VA	19	16.4 kg/mm2
EI435+24% ChZM	22.2	17

Thus, the composite EI435+24% ChZM has the best properties above 1100°C and shows the best prospects as a filler wire reinforcing material. 2 figures, 1 table, 3 bibliographic references.

2/2

APPROVED FOR RELEASE: 08/09/2001 CIA-RDP86-00513R002201520010-8"

"APPROVED FOR RELEASE: 08/09/2001 CIA-RDP86-00513R002201520010-8

UDC 620.18

USSR

KOVAL, A. D., NATAPOV, B. S., and OL'SHANETSKIY, V. E., Zaporozh'e

"The Interaction of Rare Earth Metals With the Edges of Grains of Nickel and Its Alloys"

Moscow, Fizika i Khimiya Obrabotki Materialov, No 4, Jul/Aug 72, pp 102-107

Abstract: The effect of the rare earth metals (REM) -- neodymium (Nd), praseodymium (Pr), cerium (Ce), and lanthanum (La) -- on the structural and energy properties of grain boundaries of purified nickel, nichrome (11% Cr), and an alloy of the ZhS6K type containing 15% chromium was examined. The REM impurities increased the rate of migration of grain boundaries in the following order: Nd > Pr > Ce > La. In general, the grain boundary energy of pure nickel, the length of time to fracturing under a load (T = 975°C, σ = 200 min/m^2), and the impact strength are greatest for 0.06, intermediate for 0.12, and lowest for 0.02 wt % impurity.

1/1

APPROVED FOR RELEASE: 08/09/2001 CIA-RDP86-00513R002201520010-8"

"APPROVED FOR RELEASE: 08/09/2001 CIA-RDP86-00513R002201520010-8

USSR

GRITSYNA, V. V., KIYAN, T. S., KOVAL', A. G., FOGEL', Ya. M., SERYUGIN, A. L., MARTYNOV, I. S., Khar'kov State University imeni A. M. Gor'kiy

"Concerning the Mechanism of Luminescence of Polymer Films Which Arises as They are Being Formed Under Ion-Beam Bombardment of Solids"

Moscow, Zhurnal Eksperimental'noy i Teoreticheskoy Fiziki, Vol 64, No 1, Jan 73, pp 207-216

Abstract: On the basis of experimental results, the authors suggest a new mechanism for luminescence of polymer films forming on a solid as a result of ion-beam dissociation of hydrocarbon molecules adsorbed on the surface of a bombarded target. It is shown that luminescence of atoms and molecules of helium and neon which arises during bombardment of metal targets by ions of He^+ or Ne^+ is emitted by particles of the corresponding gas located inside hollow spherolites formed during growth of the film under bombardment. The influence of the film temperature on the intensity of the emitted luminescence as well as the change in the nature and intensity of luminescence when there is a change in bombarding beams is explained on the basis of the proposed mechanism of luminescence of polymer films. A mechanism is also proposed for luminescence of polymer films

1/2

APPROVED FOR RELEASE: 08/09/2001 CIA-RDP86-00513R002201520010-8"

"APPROVED FOR RELEASE: 08/09/2001 CIA-RDP86-00513R002201520010-8

USSR

GRITSYNA, V. V. et al., ZhETF, Vol 64, No 1, Jan 73, pp 207-216

formed on the surface of dielectric targets by ion-beam bombardment. It is assumed that luminescence in this case arises as a result of the excitation of gas which has accumulated in the cavities between the substrate and the polymer film where it is peeling off.

2/2

APPROVED FOR RELEASE: 08/09/2001 CIA-RDP86-00513R002201520010-8"

"APPROVED FOR RELEASE: 08/09/2001 CIA-RDP86-00513R002201520010-8

JPRS 54068
6-73

XV-5. APPLICATION OF THE METHOD OF SECONDARY ION-ION EMISSION TO STUDY THE SURFACE OF $A^{III}B^{V}$ SEMICONDUCTOR COMPOUNDS

[Article by V. V. Bobkov, A. G. Koval', Yu. A. Klimovskiy, Y. P. Lepedev, S. S. Strel'chenko, and V. V. Shubina, Khar'kov-Kaluga; Novosibirsk, III Simposium po Protsessam Rosta i Sintezu Poluprovodnikovykh Kristallov i Plenok, Russian, 12-17 June 1972, p 216]

The use of the method of secondary ion-ion emission is proposed in this paper to study the surface of $A^{III}B^{V}$ semiconductor compounds. This method was used successfully previously [1] to study the surface reactions on the atomic level.

The research performed demonstrated that the mass spectrum of the secondary gallium arsenide ions contains two groups of particles: 1) those knocked out of the adsorbed layer and 2) those knocked out of the gallium arsenide lattice.

In the first group ions of the $Ga_mO_n^+$, Ga_mOH^+ and Ga_mAsO^+ type were observed the origin of which is related to the surface contamination. The study of the temperature dependence of these ions demonstrated that the gallium arsenide surface is cleaned in a vacuum of 10^{-7} mm Hg at a temperature of 500° C.

In the second group of particles, ions of the $Ga_mAs_n^+$ type were observed. In this paper there is a discussion of possible mechanisms of their occurrence connected with the characteristic features of the chemical bond in gallium arsenide.

A study was made of certain aspects of the application of the method of secondary ion-ion emission to the study of the processes of the formation of nucleating centers for growth of heterocepitaxial layers.

BIBLIOGRAPHY

1. Ya. M. Fogel', UFN (Progress in the Physical Sciences), No 91, 1073, 1967.

KOVAL, A.G.

APPROVED FOR RELEASE: 08/09/2001 CIA-RDP86-00513R002201520010-8"

"APPROVED FOR RELEASE: 08/09/2001 CIA-RDP86-00513R002201520010-8

1

USSR UDC 537.534+535.337

GRITSYNA, V. V., KIYAN, T. S., GOUTTE, R., KOVAL, A. [illegible], and FOGEL', YA. M., (R. Goutte affiliated with the National Institute of Applied Sciences, Lyons, France)

"Effect of Nonradiative Transitions on the Emission Spectrum of Excited Particles Knocked Out of Solid Targets by Fast Argon Ions"

Moscow, Izvestiya Akademii Nauk SSSR, Seriya Fizicheskaya, No. 3, Mar 71, pp 578-584

Abstract: The effect of the resonance ionization process on the spectrum emitted by excited particles knocked out of solid targets - a metal (Cu), a semiconductor (Si), and a dielectric (Al_2O_3)-by 20 kev Ar^+ ions was studied. Results show that resonance processes of excitation loss occurring when excited particles fly off the surface of a solid have a considerable effect on the emission spectrum of particles knocked out of its surface by an ion beam. It is suggested that the location of energy levels of a solid with a known energy spectrum can be predicted on the basis of the radiation of the emission spectrum of particles knocked out of the surface of the solid by an ion beam.

1/1

APPROVED FOR RELEASE: 08/09/2001 CIA-RDP86-00513R002201520010-8"

"APPROVED FOR RELEASE: 08/09/2001 CIA-RDP86-00513R002201520010-8

USSR UDC: 535.33:546.292

GRITSYNA, V. V., KIYAN, T. S., POGULI, Ya. M., [redacted], and KLIMOVSKIY, Yu. A.

"Glow of Slow Neon Particles Appearing in the Bombardment of Carbon Films by a Beam of Fast Neon Ions"

Leningrad, Optika i Spektroskopiya, Vol. 29, No. 4, 1970, pp 641-643

Abstract: This is the third paper published by the first four of the authors named above on the same subject. In the two earlier papers (ZhETF, Letters to the Editor, 9, 1969, p 212; 58, No. 5, 1970) the authors reported discovery of a glow from slow helium atoms and molecules resulting from prolonged bombardment of hard targets of Ni, Pd, Pt, Ta, and C by He^+ ions. This paper reports experiments conducted with carbon films as the targets for beams of N^+, Ar^+, and Ne^+, with a beam density of about 50 $\mu A/cm^2$ and an ion energy of about 20 kev. When the N^+ ions were used, no glow was registered for the slow nitrogen particles. There was also no glow for slow argon particles upon bombardment of the film with Ar^+ ions. For the Ne particles, however, there was a glow, and the sole illustration in this short article shows the spectrum of this glow with a beam density of 10 μA.

1/1

APPROVED FOR RELEASE: 08/09/2001 CIA-RDP86-00513R002201520010-8"

"APPROVED FOR RELEASE: 08/09/2001 CIA-RDP86-00513R002201520010-8

USSR

KOPPE, V.T., KOVAL', A.G., FIZGEYER, B.M., FOGEL', Ya.M., IVANOV, S.I.,
Kharkov State University

"Measurement of the Effective Cross Sections and Excitation Functions for Bands of the First Negative System of the N_2^+ Molecular Ion With the Excitation of Nitrogen by Fast Electrons"

Moscow, Zhurnal Eksperimental'noy i Teoreticheskoy Fiziki, No 12, 1970, pp 1878-1883

Abstract: The effective cross section for the (0-0), (0-1), (0-2), (0-3), (1-2) (1-3), and (1-4) bands of the first negative system of the N_2^+ ion and the multiplet lines $\lambda = 5001 - 5005$ Å in the NII spectrum were measured at energies between 0.5 and 20 kev. The nitrogen was excited by electrons with energies between 0.5 and 20 kev. In the region of overlapping energies the experimental effective cross sections are in good agreement with the data of quoted sources. A formula is presented which satisfactorily describes the course of the excitation functions of the bands and lines investigated at energies between 0.8 and 20 kev. 3 figures, 1 table, 10 bibliographic entries.

1/1

APPROVED FOR RELEASE: 08/09/2001 CIA-RDP86-00513R002201520010-8"

"APPROVED FOR RELEASE: 08/09/2001 CIA-RDP86-00513R002201520010-8

1/2 035 UNCLASSIFIED PROCESSING DATE--27NOV70

TITLE--EJECTIN OF SLOW EXCITED HELIUM ATOMS AND MOLECULES FROM A CARBON FILM PRODUCED BY BOMBARDING SOLID TARGETS WITH FAST HELIUM IONS -U-

AUTHOR-(04)-GRITSINA, V.V., KIYAN, T.S., KOVAL, A.G., POGEL, YA.M.

COUNTRY OF INFO--USSR

SOURCE--ZHURNAL EKSPERIMENTAL'NOY I TEORETICHESKOY FIZIKI, 1970, VOL 58, NR 5, PP 1491-1496

DATE PUBLISHED--------70

SUBJECT AREAS--PHYSICS

TOPIC TAGS--ION BOMBARDMENT, HELIUM, ATOM, MOLECULE, LUMINESCENT MATERIAL, CARBON, LUMINESCENCE

CONTROL MARKING--NO RESTRICTIONS

DOCUMENT CLASS--UNCLASSIFIED

PROXY REEL/FRAME--3002/0009 STEP NO--UR/0056/70/058/005/1491/1496

CIRC ACCESSION NO--AP0127659

UNCLASSIFIED

APPROVED FOR RELEASE: 08/09/2001 CIA-RDP86-00513R002201520010-8"

"APPROVED FOR RELEASE: 08/09/2001 CIA-RDP86-00513R002201520010-8

2/2 035 UNCLASSIFIED PROCESSING DATE--27NOV70

CIRC ACCESSION NO--AP0127659

ABSTRACT/EXTRACT--(U) GP-0- ABSTRACT. LUMINESCENT SLOW HELIUM ATOMS AND MOLECULES WERE OBSERVED BY BOMBARDING VARIOUS SOLID TARGETS WITH 20 KEV HE PRIME POSITIVE IONS. THIS LUMINESCENCE IS DUE TO THE SLOW HELIUM ATOMS AND MOLECULES EJECTED FROM THE CARBON FILM PRODUCED ON THE TARGET SURFACE AS A RESULT OF INTERACTION BETWEEN THE BOMBARDING BEAM IONS AND HYDROCARBON MOLECULS ADSORBED AT THE SURFACE. SOME CONSIDERATIONS PERTAINING TO THE LUMINESCENCE MECHANISM OF THE HELIUM ATOMS AND MOLECULES ARE PRESENTED. FACILITY: KHAR'KOVSKIY GOSUDARSTVENNYY UNIVERSITET IM. A. M. GOR'KOGO.

UNCLASSIFIED

APPROVED FOR RELEASE: 08/09/2001 CIA-RDP86-00513R002201520010-8"

"APPROVED FOR RELEASE: 08/09/2001 CIA-RDP86-00513R002201520010-8

USSR

SHAMRAY, A. YE., KOVAL', A. I.

"Change in Concentration of Nucleic Acids in the Bone Marrow of Animals With Acute Radiation Sickness Under the Effect of Homotransplantation of Bone Marrow"

Gematol. i perelivaniye krovi. Resp. mezhved. sb. (Hematology and Blood Transfusion. Republic Interdepartmental Collection), 1971, No 6, pp 83-87 (from RZh-Biologicheskaya Khimiya, No 21, Nov 71, Abstract No 21F1357)

Abstract: The concentration of nucleic acids, especially DNA, decreases in the bone marrow of rats after they are exposed to x-ray irradiation (800-850 roentgens). After homotransplantation of bone marrow, the concentration of nucleic acids in the bone marrow tissue increases. The amount of RNA 20-30 days after the transplant is somewhat greater than that in the control animals. Resume.

1/1

APPROVED FOR RELEASE: 08/09/2001 CIA-RDP86-00513R002201520010-8"

"APPROVED FOR RELEASE: 08/09/2001 CIA-RDP86-00513R002201520010-8

USSR UDC 617-001.28-036.11-036.8:616.411-07

KOVAL', A. I., SHAMRAY, A. Ye., and RUBAN, V. I., Scientific Research Institute of Hematology and Blood Transfusion, and Laboratory of Histochemistry and Electron Microscopy, Institute of Otorhinolaryngology, Kiev

"Effect of Transplantation of Homologous Bone Marrow on the Nucleic Acid Content of the Spleen During Acute Radiation Sickness"

Kiev, Vrachebnoye Delo, No 9, Sep 70, pp 103-107

Abstract: Rats were exposed to lethal doses of X-rays (300 to 850 r) and, 24 hours later, received homologous bone marrow transplants intravenously. Both the RNA and, in particular, the DNA content of the spleen decreased sharply after irradiation. Restoration began on the 8th day, by the 30th day, both nucleic acids were at normal levels. All of the control animals (which did not receive the bone marrow transplants) likewise exhibited a marked decrease in the nucleic acids, especially by the 4th day, a slight increase until the 8th day, and then a steady decrease until the 12th or 13th day, when they died.

1/1

APPROVED FOR RELEASE: 08/09/2001 CIA-RDP86-00513R002201520010-8"

"APPROVED FOR RELEASE: 08/09/2001 CIA-RDP86-00513R002201520010-8

1/2 024 UNCLASSIFIED PROCESSING DATE--02OCT70

TITLE--ON THE ASYMMETRY OF MOUSTACHES -U-

AUTHOR-(02)-KOVAL, A.N., SEVERNYI, A.B.

COUNTRY OF INFO--USSR

SOURCE--SOLAR PHYSICS, VOL. 11, FEB. 1970, P. 276-284

DATE PUBLISHED----FEB70

SUBJECT AREAS--ASTRONOMY,ASTROPHYSICS, EARTH SCIENCES AND OCEANOGRAPHY

TOPIC TAGS--PHOTOGRAMMETRY, SOLAR DISTURBANCE, EMISSION SPECTRUM

CONTROL MARKING--NO RESTRICTIONS

DOCUMENT CLASS--UNCLASSIFIED

PROXY REEL/FRAME--1987/1015. STEP NO--NE/0000/70/011/000/0276/0284

CIRC ACCESSION NO--AP0104413

UNCLASSIFIED

APPROVED FOR RELEASE: 08/09/2001 CIA-RDP86-00513R002201520010-8"

"APPROVED FOR RELEASE: 08/09/2001 CIA-RDP86-00513R002201520010-8

UNCLASSIFIED PROCESSING DATE--02OCT70

2/2 024

CIRC ACCESSION NO--AP0104413

ABSTRACT/EXTRACT--(U) GP-0- ABSTRACT. PHOTOMETRIC INVESTIGATION OF TRANSIENT EMISSIONS CALLED MOUSTACHES CARRIED OUT TO REVEAL ASYMMETRY IN THEIR FAR WINGS, IF IT EXISTS. DIFFICULTIES IN PHOTOGRAMMETRIC METHODS, AS WELL AS OTHER SOURCES OF ERRORS, ARE DISCUSSED. A BLUE ASYMMETRY AS A SYSTEMATIC DIFFERENCE OF INTENSITIES BETWEEN THE BLUE AND THE RED WING WAS OBSERVED IN SOME CASES, BEING TWO OR THREE TIMES LARGER THAN THE PROBABLE ERRORS. IN MOST MOUSTACHES INVESTIGATED, THE ACCOMPANYING BACKGROUND CONTINUOUS EMISSION SHOWS A RAPID INCREASE TO THE VIOLET. IT IS CONCLUDED THAT THE APPEARANCE OF THE BLUE ASYMMETRY OF THE FAR WINGS IN SOME MOUSTACHES IS PROBABLY A REAL EFFECT.

UNCLASSIFIED

APPROVED FOR RELEASE: 08/09/2001 CIA-RDP86-00513R002201520010-8"

"APPROVED FOR RELEASE: 08/09/2001 CIA-RDP86-00513R002201520010-8

UDC 773.9:681.41

USSR

VEYDENBAKH, V.A., VOYEYKOVA, Ye.D., and KOVAL', G.I.

"Possibility of Using Domestic Shellac in Precision Photography"

Moscow, Optiko-Mekhanicheskaya Promyshlennost', No 2, 1970, pp 44-45

Abstract: Two types of domestic shellac were investigated as possible material for making scales, grids and similar parts for optical devices. The first type was obtained at the Azerbaydzan experimental station as a mixture made from fig and acacia plants, and the second came from the Komarov Botanic Institute and was grown on a fig plant. The results show that scales and grids made by vacuum deposition of layers make it possible to produce strokes 1.25 micrometers wide and in photoetching 3.3 micrometers.

1/1

APPROVED FOR RELEASE: 08/09/2001 CIA-RDP86-00513R002201520010-8"

"APPROVED FOR RELEASE: 08/09/2001 CIA-RDP86-00513R002201520010-8

USSR UDC 621.165-253.4

KOVAL', G. S., KISEL'MAN, L. A., KUZNETSOV, B. D., and DON, E. A.

"Vibration State of Rotors of the K-300-240 KhTGZ Turbogenerator Set"

Chelyabinsk, V sb. "Osvoyeniye blokov moshchnost'yu 300 MVt na Ekibastuzsk. ugle" (Collection of Works-Assimilation of 300 Mw Power Units Burning the Ekibastuz Region Coal), 1972, pp 99-104 (from Referativnyy Zhurnal-Teploenergetika, No 6, June 72, Abstract No 6C37)

Abstract: Work conducted at the present time for increasing the rigidity of the No 3, 4, 5 bearings of the K-300-240 KhTGZ turbogenerator set will make it possible to improve substantially its vibration state by eliminating the resonance vibrations at about service speed and the coincidence of critical speeds of turbine rotors. Ways of further reduction of rotor vibration are associated with

1/2

APPROVED FOR RELEASE: 08/09/2001 CIA-RDP86-00513R002201520010-8"

"APPROVED FOR RELEASE: 08/09/2001 CIA-RDP86-00513R002201520010-8

USSR

KOVAL', G.S., et al, Chelyabinsk, V sb. "Osvoyeniye blokov moshchnost'yu 300 MVt na Ekibastuzsk. ugle" 1972, pp 99-104 (from Referativnyy Zhurnal-Teplo-energetika, No 6, June 72, Abstract No 6C37)

quality rotor balancing at service speed to be performed at the plant and with improvement in generator rotor construction technology, in particular, in removing their thermal instability and inequal rigidity. Maintainance work on electric power stations must be accompanied by a thorough dynamic balancing of rotors on balancers of pendulum type. When designing the fundations and pipe system it is necessary to consider the importance of securing the minimum thermal expansion inequality of foundation columns, for the purpose of stabilizing loads on the turbogenerator bearings. 3 figures, 2 references.

2/2

APPROVED FOR RELEASE: 08/09/2001 CIA-RDP86-00513R002201520010-8"

"APPROVED FOR RELEASE: 08/09/2001 CIA-RDP86-00513R002201520010-8

USSR UDC 621.165.251:534.1.001.5

RUNOV, B. T., DON, E. A., MEYEROVICH, L. E., SELYUGIN, B. S., and KOVAL', G. S.

"Vibration Condition of Bloc-Type Turbo-Units"

"Kotel'n. i turbin. ustanovki energ. blokov" (Boiler and Turbine Installations of Power Units) Moscow "Energiya", 1971, pp 192-201 (from Referativnyy Zhurnal-Turbostroyeniye, No 10, Oct 71, Abstract 10.49.46)

Abstract: It is suggested, on the basis of data from vibration studies carried out by the All-Union Institute of Heat Engineering im. F. E. Dzerzhinskiy, on more than 120 turbo-units with evaluation of vibration parameters, to use the effective value of vibration speed as a criterion for evaluating the state of vibration of a turbo-unit. In accordance with developed GOST project, evaluation of vibration should be made by the largest measured value of the effective vibration speed of a bearing in accordance with the following scale: excellent - not higher than 1.6 mm/sec, good - not higher than 2.8 mm/sec, satisfactory - not higher than 4.5 mm/sec. It [illegible]

APPROVED FOR RELEASE: 08/09/2001 CIA-RDP86-00513R002201520010-8"

"APPROVED FOR RELEASE: 08/09/2001 CIA-RDP86-00513R002201520010-8

AA0052694

UR 0482

Soviet Inventions Illustrated, Section III Mechanical and General, Derwent, 2-70

244003 OIL PUMP & FILTER SYSTEM for the forced oil lubrication of an internal combustion engine. The unit consists of case 1, axle 2, of the rotor 3 with oil alleyways 4 & 5. The improvement is in the position of the oil thrower 7 which is bowl shaped and covers the oil feed bores 4, and the reducing diametric baffle 10 at the rate of 1 M.M. per step. A further improvement is in the position of the oil channels 5 to pressure nozzles 6 which are set in the bottom of rotor 3. 21.4.62 as 774506/24-6 A.Ya. KHESIN et al. (3.10.69) Bul. 17/14.5.69. Class 46c, 82b. Int. Cl. F 02f, F 04b.

Khesin, A.Ya.; Koval', I.A.; Yeremenko, B.S.

11

19821483

APPROVED FOR RELEASE: 08/09/2001 CIA-RDP86-00513R002201520010-8"

"APPROVED FOR RELEASE: 08/09/2001 CIA-RDP86-00513R002201520010-8

AA0052694

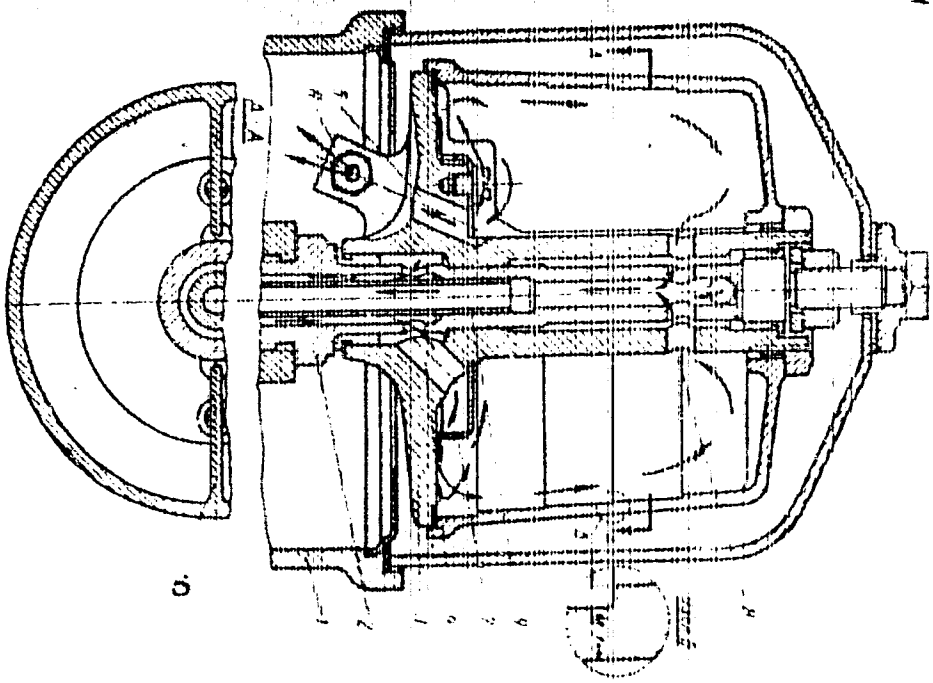

2/2

19821484

APPROVED FOR RELEASE: 08/09/2001 CIA-RDP86-00513R002201520010-8"