"APPROVED FOR RELEASE: 08/09/2001 CIA-RDP86-00513R002201520016-2

AA0044627 KOVALSKIY R.V. UR 0482

Soviet Inventions Illustrated, Section II Electrical, Derwent,

2/70

243679 METHOD OF MEASURING THE RESISTANCE OF THERMO-ELECTRIC SYSTEMS by separating the ohmic component from the Peltier e.m.f. To enable the resistance to be measured through a wide temperature interval, an even junction temperature is obtained by passing a d.c. current through the system for those junctions a temperature gradient for heating-up has been set.
2.8.67 as 1177260/26-25.A.T.BELEVTSEV et al.(26.9.69)
Bul 17/14.5.69. Class 21b, 21e.Int.Cl.H 01m,G 01r.

AUTHORS: Belevtsev, A. T.; Koval'skiy, R. V.; Takhats, M. S.

4

1/1

19771313

APPROVED FOR RELEASE: 08/09/2001 CIA-RDP86-00513R002201520016-2"

"APPROVED FOR RELEASE: 08/09/2001 CIA-RDP86-00513R002201520016-2

USSR UDC: 621.362.2

BUTYRSKIY, V. I., KOVAL'SKIY, R. V.

"A Method of Measuring the Quality of the Semiconductor Material in a Thermoelectric Device"

Moscow, Otkrytiya, Izobreteniya, Promyshlennyye Obraztsy, Tovarnyye Znaki, No 19, 1970, Author's Certificate No 259213, filed 27 May 68, p 194

Abstract: This author's certificate introduces a method of measuring the quality of the semiconductor material in a thermoelectric device in the case of constant thermal flux by measuring a parameter which characterizes the impedance in the open-circuit and short-circuited states. As a distinguishing feature of the patent, measurement precision is improved by taking the emp ratio for the open and shorted states as the parameter which characterizes the impedance.

1/1

APPROVED FOR RELEASE: 08/09/2001 CIA-RDP86-00513R002201520016-2"

"APPROVED FOR RELEASE: 08/09/2001 CIA-RDP86-00513R002201520016-2

USSR UDC: 576.8.095.352

KOVAL'SKIY, V. V., LETUNOVA, S. V., and ALTYNBAYEVA, R. D., Biogeochemical Laboratory, Institute of Geochemistry and Analytical Chemistry imeni V. I. Vernadskiy, Academy of Sciences USSR, Moscow

"Genetic Transformation of Resistance to Selenium and Formation of Selenoreductase by Bacillus megatherium"

Moscow, Doklady Akademii Nauk SSSR, Vol 194, No 6, 1970, pp 1429-1432

Abstract: A study was made of two B. megatherium strains: strain 8, isolated from soil with a high selenium content (Tuva ASSR) and adapted to excess Se under natural conditions; and strain 101, isolated from soil with a low Se content (Moscow Oblast) and adapted to this concentration. It was found that strain 8 grown on Czapek's medium without Se reduces selenite upon subsequent incubation with selenite. Selenoreductase is invariably found in strain 8, regardless of the presence of Se in the nutrient medium. Strain 101 produces selenoreductase only when grown on a medium with Se. In an attempt to transform the low resistance to Se and selenoreductase activity in strain 101, DNA isolated from strain 8 (donor) was added to a medium with strain 101 (recipient). Cultures of transformants resistant to high concentrations of Se were obtained in the medium af-

1/2

APPROVED FOR RELEASE: 08/09/2001 CIA-RDP86-00513R002201520016-2"

"APPROVED FOR RELEASE: 08/09/2001 CIA-RDP86-00513R002201520016-2

USSR

KOVAL'SKIY, V. V., et al, Doklady Akademii Nauk SSSR, Vol 194, No 6, 1970, pp 1429-1432

ter incubation for 2 hours. In another series of experiments, the recipient (strain 101) grown on Czapek's medium without Se failed to reduce selenite when subsequently incubated with it. The donor (strain 8), on the other hand, produced selenoreductase under the same conditions. The transformants also exhibited selenoreductase activity, but to a lesser degree than the donor.

2/2

APPROVED FOR RELEASE: 08/09/2001 CIA-RDP86-00513R002201520016-2"

"APPROVED FOR RELEASE: 08/09/2001 CIA-RDP86-00513R002201520016-2

USSR K UDC 631.46

~~KOVAL'SKIY, V. V.~~, LETUNOVA, S. V., and YERMAKOV, V. V., Institute of Geochemistry and Analytical Chemistry imeni V. I. Vernadskiy

"Artificial Change in Adaptation of Bac. megaterium to the Natural Selenium Content of Soil"

Moscow, Izvestiya Akademii Nauk SSSR, Seriya Biologicheskaya, No 1, 1970, pp 72-76

Abstract: Repeated passaging of Bac. megatherium strains 29 and 101 (isolated from soil with a low selenium content in Moscow Oblast') on Czapek's medium with a selenium content 10 times higher than the concentration optimum for the freshly isolated strains caused adaptation of these strains to the new high selenium level. Similarly, Tuva strains 9 and 20 (isolated from soil with a high selenium content) adapted quickly (after 5-15 passages) to Czapek's medium with a low selenium content. A third Tuva strain (8) was resistant to a lower level of selenium in the medium. One of the possible mechanisms of adaptation of Bac. megatherium to high selenium concentrations may be the appearance of the induced adaptive enzyme Se-reductase, which reduces soluble selenium compounds and converts them to a form unavailable for microorganisms and inactive in the cells.

1/1

APPROVED FOR RELEASE: 08/09/2001 CIA-RDP86-00513R002201520016-2"

"APPROVED FOR RELEASE: 08/09/2001 CIA-RDP86-00513R002201520016-2

USSR

UDC 577.4:576.851.5

LETUNOVA, S. V., KOVAL'SKIY, V. V., and ROMANOVA, S. N., Biogeochemical Laboratory, Institute of Geochemistry and Analytical Chemistry imeni V. I. Vernadskiy, Academy of Sciences USSR

"Geochemical Ecology of Microorganisms Under Conditions of Different Uranium Content in Mud"

Moscow, Zhurnal Obshchey Biologii, Vol 31, No 1, 1970, pp 111-120

Abstract: Strains of Bac. megatherium, Bac. mesentericus, Bacterium sp., and Mycobacterium sp. were isolated from the mud of Lake Issyk-Kul' with a high U content (1.5×10^{-3} percent) and from the mud of a lake in the vicinity of Moscow with a low U content (5.0×10^{-5} percent). The microorganisms were grown on culture media with a varying U content. Strains from Lake Issyk-Kul' and from the Moscow lake accumulated U during growth. For Issyk-Kul' strains adapted to a medium with a high U content, accumulation of U in the medium (Czapek is medium containing varying amounts of uranyl acetate) was accompanied by an increase in the rate of growth. The opposite was true for strains of the same genus isolated from the mud of the Moscow lake; with an increased accumulation of U in the cells, the rate of growth decreased.

1/1

APPROVED FOR RELEASE: 08/09/2001 CIA-RDP86-00513R002201520016-2"

"APPROVED FOR RELEASE: 08/09/2001 CIA-RDP86-00513R002201520016-2

1/3 017 UNCLASSIFIED PROCESSING DATE--23OCT70

TITLE--EFFECT OF MANGANESE ON THE PHOSPHATASE ACTIVITY OF EPIPHYSEAL CARTILAGE AND FORMED BONE -U-

AUTHOR-(02)-KOVALSKIY, V.V., DUBINSKAYA, A.V.

COUNTRY OF INFO--USSR

SOURCE--DOKL. VSES. AKAD. SEL'SKOKHOZ. NAUK 1970, (1), 26-30

DATE PUBLISHED--------70

SUBJECT AREAS--BIOLOGICAL AND MEDICAL SCIENCES

TOPIC TAGS--BONE, CARTILAGE, TISSUE PHYSIOLOGY, PHOSPHATASE, ENZYME ACTIVITY, MANGANESE COMPOUND

CONTROL MARKING--NO RESTRICTIONS

DOCUMENT CLASS--UNCLASSIFIED

PROXY REEL/FRAME--1998/1004 STEP NO--UR/3275/70/000/001/0026/0030

CIRC ACCESSION NO--AT0121601

UNCLASSIFIED

APPROVED FOR RELEASE: 08/09/2001 CIA-RDP86-00513R002201520016-2"

"APPROVED FOR RELEASE: 08/09/2001 CIA-RDP86-00513R002201520016-2

2/3 017 UNCLASSIFIED PROCESSING DATE--23OCT70

CIRC ACCESSION NO--AT0121601

ABSTRACT/EXTRACT--(U) GP-0- ABSTRACT. IN 2 SERIES OF EXPTS. IN VIVO, DAY OLD CHICKS WERE FED (1) A BASAL RATION, (2) THE BASAL RATION PLUS 10 MG OF MNSO SUB4-100 G FEED OR, (3) THE BASAL PLUS 100 MG OF MNSO SUB4-100 G FEED. ACID PHOSPHATASES WERE MOST ACTIVE AT PH 4.0-4.2 AND 5.0-5.5 IN THE FORMING BONE. PHOSPHATASE AT PH 4.0-4.2, ISOLATED FROM THE FORMING BONE, WAS ACTIVATED IN VITRO BY MN PRIME2 POSITIVE; MAX. ACTIVITY OCCURRED WITH 0.3 MG PERCENT MN PRIME2 POSITIVE IN AN EXT. OF THE FORMING BONE OF 30 DAY CHICKENS. LOWER (0.01 MG PERCENT) AND HIGHER (1.8 MG PERCENT) CONCNS. OF MN PRIME2 POSITIVE WERE LESS EFFECTIVE. IN 30 DAY OLD CHICKENS, PHOSPHATASE ACTIVITY AT PH 4.0-4.2 DEPENDED ON THE MN CONTENT IN THE RATION; IT WAS HIGHEST IN GROUP (2), LOWER IN GROUP (1) AND LOWEST IN GROUP (3). PHOSPHATASE AT PH 5.5 WAS NOT ACTIVATED BY MN PRIME2 POSITIVE ADDNS. IN EXPTS. IN VITRO, WHEN THE CONTROL ACTIVITY OF PHOSPHATASE ISOLATED FROM THE FORMATION ZONE WAS 110 UNITS, IT WAS 87, 103, AND 83 UNITS, RESP.; WITH MN PRIME2 POSITIVE ADDNS. 0.01, 0.3, AND 1.8 MG PERCENT. ALK. PHOSPHATASES WERE ACTIVATED BY MN PRIME2 POSITIVE ADDNS. IN VITRO. ALK. PHOSPHATASES (PH 8.5 AND 9.2) EXTD. FROM THE EPIPHYSEAL CARTILAGE, HAD HIGHER ACTIVITIES THAN PHOSPHATASE AT PH 7.4. THE ACTIVITY OF PHOSPHATASE AT PH 8.7 IN THE EPIPHYSEAL CARTILAGE BY THE 65TH DAY WAS CONSIDERABLY HIGHER THAN IN THE FORMING BONE. AT 30 DAYS OF AGE, THE HIGHEST ACTIVITY OF THE ENZYME WAS IN GROUP (2) AND THE LOWEST IN GROUP (3), WHILE THE OPPOSITE WAS OBSERVED AT 65 DAYS. NO DIRECT DEPENDENCE WAS DISCOVERED BETWEEN PHOSPHATASE ACTIVITY AT PH 8.7 AND MN CONTENT IN EPIPHYSEAL CARTILAGE.

UNCLASSIFIED

APPROVED FOR RELEASE: 08/09/2001 CIA-RDP86-00513R002201520016-2"

"APPROVED FOR RELEASE: 08/09/2001 CIA-RDP86-00513R002201520016-2

UNCLASSIFIED PROCESSING DATE--23OCT70

3/3 017

CIRC ACCESSION NO--AT0121601

ABSTRACT/EXTRACT--IN EXPTS. IN VITRO PHOSPHATASE ACTIVITY AT PH 9.0-9.2 CHANGED WITH ADDN. OF MN PRIME2 POSITIVE AND MG PRIME2 POSITIVE, DEPENDING ON THE RATIO OF THE TWO ELEMENTS. IT HAS HIGHER AT 30 DAYS WITH HIGHER MG-MN RATIO AND HIGHER P LEVEL, AND HIGHER AT 65 DAYS OF AGE WITH A LOWER MG-MN RATIO AND A LOWER P LEVEL. FACILITY: BIOGEOKHIM. LAB., INST. GEOKHIM. ANAL. KHIM. IM. VERNADSKOGO, MOSCOW.

UNCLASSIFIED

APPROVED FOR RELEASE: 08/09/2001 CIA-RDP86-00513R002201520016-2"

"APPROVED FOR RELEASE: 08/09/2001 CIA-RDP86-00513R002201520016-2

1/2 023 UNCLASSIFIED PROCESSING DATE--16OCT70

TITLE--RESISTANCE OF A YEAST LIKE FUNGUS PULLULARIA PULLULANS (DE BARY) BERK, TO THE LETHAL AND MUTAGENIC ACTION OF UV AND X RAYS -U-

AUTHOR-(03)-KOVALTSOVA, S.V., ZAKHAROV, I.A., LEVITIN, M.M.

COUNTRY OF INFO--USSR

SOURCE--TSITOLOGIYA: 12: 233-7, FEB 1970

DATE PUBLISHED--------70

SUBJECT AREAS--BIOLOGICAL AND MEDICAL SCIENCES

TOPIC TAGS--FUNGUS, UV RADIATION BIOLOGIC EFFECT, X RAY EFFECT

CONTROL MARKING--NO RESTRICTIONS

DOCUMENT CLASS--UNCLASSIFIED

PROXY REEL/FRAME--1999/0299 STEP NO--UR/9053/70/012/000/0233/0237

CIRC ACCESSION NO--AP0122501

UNCLASSIFIED

APPROVED FOR RELEASE: 08/09/2001 CIA-RDP86-00513R002201520016-2"

"APPROVED FOR RELEASE: 08/09/2001 CIA-RDP86-00513R002201520016-2

2/2 023 UNCLASSIFIED PROCESSING DATE--16OCT70

CIRC ACCESSION NO--AP0122501

ABSTRACT/EXTRACT--(U) GP-0- ABSTRACT. THE RESISTANCE OF A YEAST LIKE FUNGUS PULLULARIA PULLULANS TO UV AND X IRRADIATION WAS COMPARED WITH THAT OF DIPLOID STRAINS OF SACCHAROMYCES CEREVISEAE. THE RESULTS OBTAINED REVEALED A HIGH RESISTANCE OF P. PULLULANS TO LETHAL UV AND X IRRADIATION; AT UV AND X IRRADIATION LD SUB90 WAS FOUND TO BE 10,000 ERG-MM PRIME2 AND 170 TO 225 KR, RESPECTIVELY. AT THE SAME TIME, FOR DIPLOID STRAINS OF YEAST THE CORRESPONDING VALUES WERE 3000 ERG-MM PRIME2 AND 85 KR. THE HIGH RESISTANCE OF P. PULLULANS WAS ALSO REVEALED FOLLOWING THE MUTAGENIC ACTION OF UV LIGHT (INDUCTION OF REVERSIONS TO ADENINE INDEPENDENCE). P. PULLULANS WAS REGARDED AS AN ORGANISM EXTREMELY RESISTANT TO IRRADIATION. FACILITY: ALL UNION RESEARCH INST. OF PLANT PROTECTION, LENINGRAD.

UNCLASSIFIED

APPROVED FOR RELEASE: 08/09/2001 CIA-RDP86-00513R002201520016-2"

"APPROVED FOR RELEASE: 08/09/2001 CIA-RDP86-00513R002201520016-2

2

USSR

UDC 621.15:541.66

DOLZHENKOV, I. Ye., KLIMENKO, G. P., VERBOLOZ, V. D., RUBAN, A. A., KOVALYUK, V. V., and PROKOPENKO, V. Ye.

"Effect of Tempering and Self-Tempering on the Mechanical Properties of Thermally Hardened Carbon Filaments from Low-Carbon Steel"

Metallurgicheskaya i Gornorudnaya Promyshlennost', No 2, 1971, pp 26-27

Abstract: Carbon filaments 75 x 75 x 8 mm from open-hearth steel were hardened by tempering and self-tempering (i.e. a last discontinuous cooling) using electro-contact heating. Completely hardened filaments were tempered in an electrical shaft furnace from 100 to 650°C at 50° intervals for periods of 0.5 to 1.5 hours and cooled after treatment in air. The results of stability and microstructure studies confirmed previous results and indicated no change in properties after hardening by tempering or self-tempering at the same temperature and times. Changing the length of the processing time from 0.5 to 1.5 hours did not appear to affect the mechanical properties. Thermally processed filaments have a lower cold brittleness temperature. Even at -60°C the impact strength of improved steel was at the level of 15-20 kg/cm². The most stable values of impact strength at test temperatures from +20 to -60°C were obtained after hardening and tempering at 400-500°C.

1/1

APPROVED FOR RELEASE: 08/09/2001 CIA-RDP86-00513R002201520016-2"

"APPROVED FOR RELEASE: 08/09/2001 CIA-RDP86-00513R002201520016-2

USSR UDC: [537.226+537.311.33]:[537+535]

KOVALYUK, Z. D, and OGORODNIK, A. D.

"Piezoresistance in p-In_2Se"

Fiz. elektronika, Resp. mizhvid. nauk.-tekhn. zb. (Physical Electronics, Interdepartmental Scientific-Technical Collection, Ukrainian Republic--collection of works) No. 2, 1970, pp 28-29 (from RZh-Fizika, No. 11, 1971, Abstract No. 11E959)

Translation: An investigation is made of diagonal components of piezoresistance (P) in p-In_2Se at room temperature. These diagonal components vary in sign and their values differ sharply. The results of the research agree closely with the equivalent valley model and permit the establishment of the basic characteristics of the In_2Se valence zone.

1/1

APPROVED FOR RELEASE: 08/09/2001 CIA-RDP86-00513R002201520016-2"

"APPROVED FOR RELEASE: 08/09/2001 CIA-RDP86-00513R002201520016-2

USSR UDC: [537.226+537.311.33]:[537+535]

KOVALYUK, Z. D.

"Piezoresistance in n-In_2Se"

Fiz. elektronika, Resp. mizhvid. nauk.-tekhn. zb. (Physical Electronics, Interdepartmental Scientific-Technical Collection, Ukrainian Republic--collection of works) No. 2, 1970, pp 23-27 (from RZh-Fizika, No. 11, 1971, Abstract No. 11E958)

Translation: The diagonal components of the piezoresistance in n-In_2Se as a function of the temperature are investigated. Models of the nonequivalent valleys are used to interpret the experimental results. The theoretical results agree closely with the experimental.

1/1

APPROVED FOR RELEASE: 08/09/2001 CIA-RDP86-00513R002201520016-2"

"APPROVED FOR RELEASE: 08/09/2001 CIA-RDP86-00513R002201520016-2

USSR

UDC 547.241

ZHURAVLEVA, L. P., SULEYMANOVA, M. G., MARCHENKO, A. P., Z'OLA, M. I., KOVALYUKH, N. N., and KIRSANOV, A. V., Institute of Organic Chemistry, Academy of Sciences Ukrainian SSR

"Hydrogenation of Organophosphorus Compounds. Part V"

Leningrad, Zhurnal Obshchey Khimii, Sep 71, Vol 41, No 9, pp 1944-1950

Abstract: This paper is one of a series of investigations on the hydrogenation of organophosphorus compounds containing aromatic radicals. It is shown that mixed oxides of tertiary phosphines, phosphinic and phosphonic acids as well as phosphoric acid amides with phenyl and benzyl radicals will be hydrogenated in the presence of a platinum catalyst to form corresponding compounds with cyclohexyl and cyclohexylmethyl radicals; the phosphoric acid amides will be hydrogenated at a higher rate (at room temperature) than oxides and acids. Unlike the initial compounds, all hydrogenated products featured lower melting points and higher solubilities in ordinary organic solvents. When treated with phosphorus pentachloride, bis(cyclohexylmethyl) phosphinic acids form their acid chlorides -- readily mobile liquids, distillable under vacuum. When treated with propylmagnesium iodide, bis(cyclohexylmethyl)phosphinic acids form an oxide of propylbis(cyclohexylmethyl)phosphine which is identical to the hydrogenation product of

1/2

APPROVED FOR RELEASE: 08/09/2001 CIA-RDP86-00513R002201520016-2"

"APPROVED FOR RELEASE: 08/09/2001 CIA-RDP86-00513R002201520016-2

USSR

ZHURAVLEVA, L. P., et al., Zhurnal Obshchey Khimii, Sep 71, Vol 41, No 9, pp 1944-1950

propyldibenzylphosphine oxide. The experimental section of this paper is presented in great detail and includes tables citing yields, melting points, solvents for crystallization, formulas, solubilities and other indicators for phosphoric acid trialylamides $(RNH)_3PO$, phosphoric acid tris(cyclohexyl)amides $(RNH)_3PO^a$ and other related compounds.

2/2

APPROVED FOR RELEASE: 08/09/2001 CIA-RDP86-00513R002201520016-2"

"APPROVED FOR RELEASE: 08/09/2001 CIA-RDP86-00513R002201520016-2

USSR

UDC 547.241

ZHURAVLEVA, L. P., SULEYMANOVA, M. G., KOVALYUKH, N. N., and KIRSANOV, A. V.,
Institute of Organic Chemistry, Academy of Sciences Ukrainian SSR

"Dibenzylphosphinic Acid Derivatives"

Leningrad, Zhurnal Obshchey Khimii, Sep 71, Vol 41, No 9, pp 1950-1953

Abstract: A discussion is presented of a method suitable for obtaining oxides of tribenzylphosphines which, in turn, may be used to obtain a series of dibenzylphosphinic acids in good yields. When treated with phosphorus pentachloride or thionyl chloride, dibenzylphosphinic acids form acid chlorides which, when treated with ammonia and amines, form amides; when these acid chlorides are treated with alcohols and phenols (phenoxides), they form appropriate esters. The reaction of dibenzylphosphinic acid chloride with Grignard's reagents produces alkyldibenzylphosphine oxides or aryldibenzylphosphines. The fusion of alkyldibenzylphosphine oxides with alkalies yields alkylbenzylphosphinic acids -- crystalline compounds which may be titrated with phenolphthalein for monobasic acids. Tables are provided citing radicals, yields, melting points, formulas and other indicators for dibenzylphosphinic acid chlorides $(RC_6H_4CH_2)_2P(O)Cl$, dibenzylphosphinic acid amides $(RC_6H_4CH_2)_2P(O)NHR'$ and oxides of alkyldibenzylphosphines and aryldibenzylphosphines $(C_6H_5CH_2)_2P(O)R^a$.

1/1

APPROVED FOR RELEASE: 08/09/2001 CIA-RDP86-00513R002201520016-2"

"APPROVED FOR RELEASE: 08/09/2001 CIA-RDP86-00513R002201520016-2

USSR UDC: 621.373:621.317.001

KOVALYUNAS, S. Yu., BIRMANAS, Ye. M.

"Operation of an Automatic Frequency Control System With Integrating Filter and Delay in Two-Channel Wobbulators"

Dokl. Vses. nauchno-tekhn. konferentsii po radiotekhn. izmeritelyam. T. 2 (Reports of the All-Union Scientific and Technical Conference on Radio Engineering Measurements. Vol. 2), Novosibirsk, 1970, pp 144-146 (from Ref-zhurnal Radiotekhnika, No 12, Dec 70, Abstract No 12A327)

Translation: The authors analyze the process of difference frequency setting as well as the frequency error after termination of transient processes in two-channel wobbulators which are tuned by using an auxiliary tracking oscillator with AFC system to track the frequency of the given sweep-driven oscillator. A two-channel wobbulator of this type was previously analyzed without accounting for delay in the AFC circuit. The analysis in this paper relates to a wobbulator with sweep drive according to a sine law. An expression is found for the maximum sweep band for which operation of the AFC system is not disrupted. A graph is presented together with formulas which can be used to calculate the parameters of an AFC system used in a two-channel wobbulator for the case where the frequency of the follow-up oscillator is adjusted aperiodically. Bibliography of three titles. F. L.

1/1

APPROVED FOR RELEASE: 08/09/2001 CIA-RDP86-00513R002201520016-2"

"APPROVED FOR RELEASE: 08/09/2001 CIA-RDP86-00513R002201520016-2

UNCLASSIFIED

SO: SELECTED AEROSPACE RECORD FACILITIES

FCS-89

SEPT 71

SECTION I

Name: Institute of Medico-Biological Problems (IMBP), Moscow

Description:

(U) During this quarterly reporting period, seven new articles[1-7]* were located from the Institute of Medico-Biological Problems (IMBP). On the basis of these articles, it was possible to identify eight new personalities with the Institute. These personalities, the subjects of the articles, and the dates are given below:

[illegible]	space physiology/psychology	1970[1]
[illegible], A. V.	hypokinesia	1971[2]
[illegible], E. [illegible]	nutrition	1971[3]
Kornilyev, V. P.	temperature measurement	1970[4]
[illegible]	space physiology/psychology	1970[1]
Kovalzon, V. M.	temperature measurement	1970[4]
Morozov, D. Kh.	spacecraft radiation shielding	1970[5]
Trukhanov, K. A.	spacecraft radiation shielding	1970[5]

Corbunova was associated by the article[2] with the Laboratory of Cytochemistry at IMBP. Kornilyev and Kovalzon were listed in the article[4] as being associated with the Laboratory for Investigation of Nervous and Humoral Regulation at IMBP.

(U) One of the new articles was issued jointly from IMBP and the Laboratory of General and Radiation Immunology at the Institute of Epidemiology and Microbiology imeni N. F. Gamaleya[6]. This 1970 article, dealing with the effects of microflora on lymphoid tissue and the adrenal gland, probably

* Superscript numbers in parentheses refer to items in the Reference List.

UNCLASSIFIED

KOVALZON, V.M.

APPROVED FOR RELEASE: 08/09/2001 CIA-RDP86-00513R002201520016-2"

"APPROVED FOR RELEASE: 08/09/2001 CIA-RDP86-00513R002201520016-2

USSR UDC 612.822.3-06

KOVAL'ZON, V. M., Laboratory of Problems of Control of Functions in the Organism of Man and Animals imeni N. I. Grashchenkov, Academy of Sciences USSR

"Some Aspects of the Electrical Activity of the Brain of White Rats Under Conditions of Free Behavior"

Moscow, Byulleten' Eksperimental'noy Biologii i Meditsiny, Vol 71, No 3, Mar 71, pp 13-18

Abstract: Electroencephalograms were recorded in 22 white rats by means of electrodes implanted in the neocrotex, dorsal hippocampus, hypothalamus, and the reticular formation. Spontaneous hippocampal theta rhythms developed during states of behavioral activity (washing, scratching) as well as during "fast" sleep, where theta synchronization reached its maximum value. The phase of "slow" sleep consisted of relatively short cycles of gradually increasing synchronization, alternating with periods of desynchronization or with "fast" sleep phases. Application of sudden stimuli when the rats were in a state of quiet wakefulness whether induced theta synchronization in the hippocampus and desynchronization in the neocortex (accompanied by search behavior) or caused desynchronization in both structures (manifestation of a negative emotional reaction).

1/1

APPROVED FOR RELEASE: 08/09/2001 CIA-RDP86-00513R002201520016-2"

"APPROVED FOR RELEASE: 08/09/2001 CIA-RDP86-00513R002201520016-2

USSR UDC: 533.921:621.039.01

IVANOV, N. V., KOVAN, I. A., and LOS', Ye. V.

"Pre-Ionization of a Gas by the E-Wave Field in the TOKAMAK Chamber"

Leningrad, Zhurnal tekhnicheskoy fiziki, No 3, 1973, pp 513-516

Abstract: This paper describes the experimental results of an investigation into the characteristic oscillation of a hollow toroidal resonator and the characteristics of high-frequency breakdown of the gas by the field of the E wave in the chamber of the Tokomak. The resonator was made of stainless steel with a small radius of 18 cm and a large radius of 60 cm. Low-inductance loops set close to the chamber wall were used to excite the resonator, and the oscillation source was a generator operating in the 600-700 MHz range developing power up to two kilowatts in the pulse mode. A feedback circuit was included to stabilize the frequency. The experiments in gas breakdown were conducted with hydrogen at a longitudinal magnetic field intensity of 200 oersteds. The experiments showed that high-frequency pre-ionization of a gas in the Tokamak chamber is possible, and that in the high-frequency breakdown of hydrogen a plasma cord appeared at the chamber axis.

1/1

APPROVED FOR RELEASE: 08/09/2001 CIA-RDP86-00513R002201520016-2"

"APPROVED FOR RELEASE: 08/09/2001 CIA-RDP86-00513R002201520016-2

KOVANEV, V. A.

MEDICINE

SOV/JPRS 54153
29 SEP 71

UDC: 616.1-089.5:615.216.5]-059:615.216.5.015.25

COMPARATIVE EVALUATION OF ANTIDOTES FOR NONDEPOLARIZING MUSCLE RELAXANTS IN PATIENTS WITH CARDIOVASCULAR PATHOLOGY

[Article by V. A. Kovanev (deceased), Ye. S. Yerkov, S.S. Gnaina, Institute of Cardiovascular Surgery, USSR Academy of Medical Sciences, Moscow; A.M. Bakulev, Moscow; Moscow, Vestnik Akademii Meditsinskikh Nauk SSSR, Russian, No 7, 1971, pp 79-83]

Investigation of the distribution of tubocurarine in the human organism revealed that by the time adequate breathing is restored 25 percent of the dose administered is still present in the blood (Cohen et al.), and this agent is still excreted in urine for ten hours (Kalow). Churchill-Davidson, V.A. Kovanev and Ya.M. Zhmelevskiy, on the basis of electromyographic investigation of antidepolarizing neuromuscular blocks, established that neuromuscular conduction does not revert to normal for 1-2 hours after restoration of spontaneous breathing. For this reason, many anesthesiologists believe it is necessary to accelerate removal of the residual neuromuscular block by using various curare antidotes (Churchill-Davidson and Wiesel; V.A. Kovanev and Ya.M. Zhmelevskiy), although Foldes (1957), Hirzi (1968), and Yuzh. Shamin (1968) prefer to administer prolonged artificial ventilation.

A number of agents have been proposed for the purpose of dearfferentation which have an anticholinesterase action (prostigmine, galamthamine, mestinon), as well as a group of agents which lessen neuromuscular conduction by intensifying blood supply and metabolic processes (hormones and vitamins).

In spite of the extensive literature dealing with the mechanism of action of various antidotes and means of administration following anesthesia, the problem of safe removal of an antidepolarizing neuromuscular block has not yet been solved. In view of its importance and timeliness as well as of the lack of agreement on this score, we deem it necessary to write our views. We had left patients under observation with various cardiovascular pathologies; they had undergone surgery under anesthesia with total curarization (tubocurarine in doses of 15-90 mg). Most of the patients had suffered prolonged heart and vascular disease so that, in spite of their relatively young age, their condition was rather serious. A rather large group consisted of elderly patients with atherosclerotic lesions to the major vessels and concomitant, well-defined changes in the internal organs. The patients with lesions of the veins of the lower extremities were in relatively satisfactory condition.

APPROVED FOR RELEASE: 08/09/2001 CIA-RDP86-00513R002201520016-2"

"APPROVED FOR RELEASE: 08/09/2001 CIA-RDP86-00513R002201520016-2

1/2 012 UNCLASSIFIED PROCESSING DATE--02OCT70

TITLE--AUTOMATIC DEVICES FOR THE CONTINUOUS MEASUREMENT OF THE CONCENTRATION OF LIQUID MEDIA -U-

AUTHOR-(02)-SHCHETINSKIY, V.V., KOVANKO, M.M.

COUNTRY OF INFO--USSR

SOURCE--BUM. PROM. 1970, (2) 23

DATE PUBLISHED--------70

SUBJECT AREAS--CHEMISTRY

TOPIC TAGS--AUTOMATIC CONTROL SYSTEM, QUANTITATIVE ANALYSIS, CARBONATE, SULFITE, SULFATE, POTENTIOMETRIC TITRATION, BARIUM CHLORIDE/(U)KAD CHEMICAL ANALYZER

CONTROL MARKING--NO RESTRICTIONS

DOCUMENT CLASS--UNCLASSIFIED

PROXY REEL/FRAME--1989/1373 STEP NO--UR/0329/70/000/002/0023/0023

CIRC ACCESSION NO--AP0107846

UNCLASSIFIED

APPROVED FOR RELEASE: 08/09/2001 CIA-RDP86-00513R002201520016-2"

"APPROVED FOR RELEASE: 08/09/2001 CIA-RDP86-00513R002201520016-2

2/2 012 UNCLASSIFIED PROCESSING DATE--02OCT70

CIRC ACCESSION NO--AP0107846

ABSTRACT/EXTRACT--(U) GP-0- ABSTRACT. AN EXPTL. MODEL OF THE KA-D ANALYZER FOR QUANT. DETN. OF ACTIVE ALKALI AND SULFIDITY IN WHITE LIQUORS HAS BEEN CONSTRUCTED. THE AUTOMATIC DETNS. ARE IN 2 STAGES: THE REMOVAL FROM THE SAMPLE OF INACTIVE ALKALI (NA CARBONATE, SULFITE, AND SULFATE) BY TREATMENT WITH A DETD. AMT. OF BACL SUB2, AND POTENTIOMETRIC TITRN. OF AN ALIQUOT PORTION OF THE SUPERNATANT WITH HCL. THE TITRN. CURVE HAS 2 INFLECTION POINTS: (1) THE END POINT OF THE REACTION NAOH PLUS NA SUB2 S PLUS HCL YIELDS 2NACL PLUS H SUB2 O PLUS NAHS; (2) THE END POINT OF THE REACTION NAHS PLUS HCL YIELDS NACL PLUS H SUB2 S. WHITE LIQUOR (3 ML) AND BACL SUB2 SOLN. ARE INTRODUCED BY MEMBRANE METERING DEVICES, INTO THE FIRST REACTOR, WHERE THE PPT. SEDIMENTS. SIMULTANEOUSLY, WATER IS INTRODUCED. ANOTHER METERING DEVICE TRANSFERS AN ACCURATELY MEASURED AMT. OF THE SUPERNATANT TO THE TITRN. VESSEL, WHERE HCL IS DELIVERED FROM AN AUTOMATIC BURETTE. A METAL OXIDE INDICATOR ELECTRODE AND A CALOMEL ELECTRODE ARE USED; THE 2 END POINTS ARE RECORDED, GIVING THE AMT. OF NAOH AND NA SUB2 S, RESP. (THE READINGS ARE MADE IN G-L. NA SUB2 O). THE REPRODUCIBILITY OF THE ANAL. IS PLUS OR MINUS 1-1.5PERCENT; DETN. TIME IS SIMILIAR TO 7 MIN. SIMILAR INSTRUMENTS FOR THE VOLUMETRIC ANAL. OF OTHER INDUSTRIAL LIQS. CAN BE DESIGNED ON THE SAME PRINCIPLE. AFTER PRELIMINARY TESTS, THE KA-D APP. IS BEING USED IN MILLS ON AN EXPTL. BASIS.

UNCLASSIFIED

APPROVED FOR RELEASE: 08/09/2001 CIA-RDP86-00513R002201520016-2"

"APPROVED FOR RELEASE: 08/09/2001 CIA-RDP86-00513R002201520016-2

1/2 041 UNCLASSIFIED PROCESSING DATE--30OCT70

TITLE--EFFECT OF THE MUTUAL DIFFUSION OF ACCEPTORS ON THE STRUCTURE OF DIFFUSED P N JUNCTIONS IN SILICON CARBIDE -U-

AUTHOR-(03)-VIOLIN, E.YE., KOVANKO, V..V, KHOLUYANOV, G.F.

COUNTRY OF INFO--USSR

SOURCE--FIZ. TEKH. POLUPROV. 1970, 4(1), 231

DATE PUBLISHED--------70

SUBJECT AREAS--PHYSICS

TOPIC TAGS--PN JUNCTION, SILICON CARBIDE, PHYSICAL DIFFUSION, SEMICONDUCTOR BAND STRUCTURE, IMPURITY LEVEL, BORON, ETCHED CRYSTAL, THERMAL EMF, PHOTO EMF

CONTROL MARKING--NO RESTRICTIONS

DOCUMENT CLASS--UNCLASSIFIED

PROXY REEL/FRAME--1987/1993 STEP NO--UR/0449/70/004/001/0231/0231

CIRC ACCESSION NO--AP0105067

UNCLASSIFIED

APPROVED FOR RELEASE: 08/09/2001 CIA-RDP86-00513R002201520016-2"

"APPROVED FOR RELEASE: 08/09/2001 CIA-RDP86-00513R002201520016-2

2/2 041 UNCLASSIFIED PROCESSING DATE--30OCT70

CIRC ACCESSION NO--AP0105067

ABSTRACT/EXTRACT--(U) GP-0- ABSTRACT. THE INFLUENCE OF REVERSE DIFFUSION OF THE ORIGINAL COMPENSATING ACCEPTOR ON THE STRUCTURE OF P N JUNCTIONS WAS STUDIED ON 6H, N TYPE SIC CRYSTALS. AN ELONGATED TRANSITION REGION OF HIGH RESISTIVITY MAY BE PRODUCED WITHIN THE P N JUNCTION STRUCTURE. EXPTL. WORK WAS CARRIED OUT ON P N JUNCTIONS PREPD. BY DIFFUSION OF B INTO N DOPED SIC CRYSTALS THAT WERE COMPENSATED DURING GROWTH BY BE. ELECTROLYTIC ETCHING AS WELL AS PHOTOEMF. AND THERMOEMF. MEASUREMENTS SHOW A P MINUS P MINUS N STRUCTURE, WHERE P IS A REGION WITH APPROX. 10 PRIME7 OHM CM RESISTIVITY. THE P LAYER WIDTH FROM CAPACITANCE MEASUREMENTS AND FROM ETCH PIT EVALUATION IS 1.8-2.7 MU IN CRYSTALS OF 0.5-2 OHM CM RESISTIVITY. THESE VALUES AGREE WITH THE KNOWN DIFFUSION COEFFS. OF BE AND B IN SIC. FACILITY: LENINGRAD. ELEKTROTEKH. INST. IM. UL'YANOVA, LENINGRAD, USSR.

UNCLASSIFIED

APPROVED FOR RELEASE: 08/09/2001 CIA-RDP86-00513R002201520016-2"

"APPROVED FOR RELEASE: 08/09/2001 CIA-RDP86-00513R002201520016-2

USSR UDC 612.017.1-0.6:/612.76+615.252.44:547.854.7

KOVANOV, G. V., Chairs of Physical Education and Pharmacology, Bashkir Medical Institute, Ufa

"The Effects of Some Types of Muscular Activity and of Methyluracil on the Adsorptive Capacity of the Reticuloendothelial System and Experimental Infection"

Moscow, Farmakologiya i Toksikologiya, Vol 36, No 1, Jan/Feb 73, pp 100-103

Abstract: The effects of acute and chronic fatigue, physical training, and methyluracil on the adsorptive capacity of the reticuloendothelial system (RES) as indicated by the clearance of bacterial cells labelled with P^{32} were studied in experiments on mice. The half-time of removal of the bacterial cells from the blood and the phagocytic index were determined in experiments aimed at evaluating the activity of the RES. Intraperitoneal administration of methyluracil in a dose of 100 g/kg eliminated inhibition of the RES function produced by chronic, but not acute fatigue. It also increased the resistance of the mice to infections with Staph. aureus and Proteus vulgaris. Physical training strengthening the muscles, alone or in combination with the administration of methyluracil, increased the adsorptive capacity of the RES and the rate of survival of the animals after experimental infection.

1/1

APPROVED FOR RELEASE: 08/09/2001 CIA-RDP86-00513R002201520016-2"

"APPROVED FOR RELEASE: 08/09/2001 CIA-RDP86-00513R002201520016-2

1/4 025 UNCLASSIFIED PROCESSING DATE--27NOV70

TITLE--PROSPECTIVE PLAN FOR DEVELOPMENT OF MEDICAL SCIENCE IN THE USSR IN 1971-1975 -U-

AUTHOR-(02)-KOVANOV, V.V., ZHDANOV, D.A.

COUNTRY OF INFO--USSR

SOURCE--VESTNIK AKADEMII MEDITSINSKIKH NAUK SSSR, VOL 25, NO 6, 1970, PAGES 50-62

DATE PUBLISHED--------70

SUBJECT AREAS--BIOLOGICAL AND MEDICAL SCIENCES, BEHAVIORAL AND SOCIAL SCIENCES

TOPIC TAGS--MEDICAL SCIENCE, DRUG TREATMENT, PROPHYLAXIS, DIAGNOSTIC MEDICINE, FIVE YEAR PLAN, VIROLOGY, NEOPLASM, CARDIOVASCULAR SYSTEM DISEASE, HYGIENE

CONTROL MARKING--NO RESTRICTIONS

DOCUMENT CLASS--UNCLASSIFIED

PROXY REEL/FRAME--3008/0730 STEP NO--UR/0248/70/025/006/0050/0062

CIRC ACCESSION NO--AP0137802

UNCLASSIFIED

APPROVED FOR RELEASE: 08/09/2001 CIA-RDP86-00513R002201520016-2"

"APPROVED FOR RELEASE: 08/09/2001 CIA-RDP86-00513R002201520016-2

2/4 025 UNCLASSIFIED PROCESSING DATE--27NOV70

CIRC ACCESSION NO--AP0137802

ABSTRACT/EXTRACT--(U) GP-0- ABSTRACT. THE PROSPECTIVE PLAN FOR DEVELOPMENT OF MEDICAL SCIENCE IN 1971 THROUGH 1975 SHOULD DETERMINE THE GENERAL DIRECTIONS OF DEVELOPMENT OF MEDICINE IN OUR COUNTRY. AND IT IS EXTREMELY IMPORTANT FOR DEVELOPMENT OF MEDICOBIOLOGICAL DISCIPLINES TO HELP SOLVE MEDICAL PROBLEMS OF MAJOR SCIENTIFIC AND PRACTICAL IMPORTANCE. IN THE NEXT FIVE YEARS PRACTICAL MEDICINE MUST BE ENRICHED WITH THE NEWEST METHODS AND MEANS OF PROPHYLAXIS, DIAGNOSIS AND TREATMENT. OF PARTICULAR IMPORTANCE ARE METHODOLOGICAL INVESTIGATIONS. PHILOSOPHICAL ISSUES IN MEDICINE AND PROBLEMS IN GENERAL PATHOLOGY MUST BE DEVELOPED EXTENSIVELY AND SERIOUSLY. THE GUIDING DOCUMENTS FOR PREPARING THE DRAFT PLAN OF DEVELOPMENT OF MEDICAL SCIENCE IN 1971-195 WERE THE DECREE OF THE CENTRAL COMMITTEE OF THE CPSU AND USSR COUNCIL OF MINISTERS DATED 5 JULY 1968, NO 517, "ON MEASURES FOR FURTHER IMPROVEMENT OF PUBLIC HEALTHY AND DEVELOPMENT OF MEDICAL SCIENCE IN THE NATION:, AND NO 760 DATED 24 SEPTEMBER 1968, "ON MEASURES TO INCREASE THE WORK OF SCIENTIFIC ORGANIZATIONS AND TO EXPEDITE THE USE IN THE NATIONAL ECONOMY OF THE ADVANCES OF SCIENCE AND TECHNOLOGY". THE FIVE YEAR PLAN OF SCIENTIFIC RESEARCH FOR 1971-1975 INCLUDES MEDICAL PROBLEMS OF UNION SIGNIFICANCE ADMINISTERED BY THE PRESIDIUM OF THE USSR AMS AND SCIENTIFIC MEDICAL COUNCIL OF THE USSR MINISTRY OF HEALTH. EACH PLAN FOR SCIENTIFIC RESEARCH IS PRECEDED BY AN EXPLANATORY NOTE WHICH REPORTS ON THE CURRENT STATUS OF A GIVEN PROBLEM IN THE USSR AND IN WORLD SCIENCE. SUBSTANTIATION IS GIVEN FOR THE PURPOSEFULNESS OF THE PROPOSED DIRECTIONS OF RESEARCH FOR THE PERIOD IN QUESTION.

UNCLASSIFIED

APPROVED FOR RELEASE: 08/09/2001 CIA-RDP86-00513R002201520016-2"

"APPROVED FOR RELEASE: 08/09/2001 CIA-RDP86-00513R002201520016-2

3/4 025 UNCLASSIFIED PROCESSING DATE--27NOV70

CIRC ACCESSION NO--AP0137802

ABSTRACT/EXTRACT--FOR EACH OF THE MAIN DIRECTIONS THE MAIN SECTIONS OF RESEARCH ARE GIVEN INDICATING DUE DATES AND THE MAIN EXECUTIVE INSTITUTIONS. IN ACCORDANCE WITH THE DECREE OF THE CENTRAL COMMITTEE OF THE CPSU AND USSR COUNCIL OF MINISTERS, IN THE FIVE YEAR PLAN SPECIAL ATTENTION IS GIVEN TO VIROLOGY, MALIGNANT NEOPLASMS, CARDIOVASCULAR DISEASES, AND HYGIENE. SCIENTIFIC COUNCILS, PROBLEM COMMISSIONS OF THE USSR AMS AND OF THE SCIENTIFIC MEDICAL COUNCIL OF THE USSR MINISTRY OF HEALTH, THE HEAD INSTITUTES AND DEPARTMENT OFFICES OF THE USSR AMS TOOK ACTIVE PART IN THE WORK PERTAINING TO LONG RANGE FORECASTING. A GENERAL ACADEMIC COUNCIL FOR LONG RANGE FORECASTING, THE MEMBERS OF WHICH INCLUDE THE GREATEST MEDICAL SCIENTISTS OF THE NATION, WAS CREATED UNDER THE PRESIDIUM OF THE USSR AMS TO DISCUSS FORECASTS OF PARTICULAR IMPORTANCE TO THE DEVELOPMENT OF MEDICAL SCIENCE. FORECASTS PERTAINING TO CLINICAL, EPIDEMIOLOGICAL, AND HYGIENIC ISSUES WERE IDSUCSSED AND ARE STILL UNDER DISCUSSION BY THE PRESIDIUM OF THE SCIENTIFIC MEDICAL COUNCIL OF THE USSR MINISTRY OF HEALTH ON THE BASIS OF THE REVIEWS OF COMPETENT COMMISSIONS. AS A RESULT OF THE WORK DONE, FORECASTS WERE COMPILED ON MEDICAL ISSUES OF NATIONAL IMPORTANCE UNDER THE JURISDICTION OF THE PRESIDIUM OF THE USSR AMS AND SCIENTIFIC MEDICAL COUNCIL OF THE USSR MINISTRY OF HEALTH. WITH REFERENCE TO TEACH PROBLEM, A FORECAST WAS MADE OF DEVELOPMENT OF THE DIRECTIONS THAT ARE OF THE GREATEST IMPORTANCE TO SOVIET PUBLIC HEALTH.

UNCLASSIFIED

APPROVED FOR RELEASE: 08/09/2001 CIA-RDP86-00513R002201520016-2"

"APPROVED FOR RELEASE: 08/09/2001 CIA-RDP86-00513R002201520016-2

4/4 025 UNCLASSIFIED PROCESSING DATE--27NOV70

CIRC ACCESSION NO--AP0137802

ABSTRACT/EXTRACT--SPECIAL ATTENTION WAS DEVOTED TO DEVELOPMENT OF COMPREHENSIVE THEORETICAL MEDICOBIOLOGICAL RESEARCH, SOCIOHYGIENIC ASPECTS OF PROPHYLAXIS AND REHABILITATION, THE SEARCH AND ADOPTION OF NEW METHODS AND MEANS OF PROPHYLAXIS, DIAGNOSIS AND TREATMENT. LIFE WILL MAKE CORRECTIONS IN THESE FORECASTS, NEW DISCOVERIES IN SOME BRANCH OF MEDICINE MAY ALTER THE MAIN DIRECTION, HOWEVER, WHEN PLANNING MEDICAL SCIENCE ON THE NATIONAL LEVEL, IT IS IMPORTANT TO HAVE SOME GENERAL LINES, A COMPLEX PLAN FOR THE SOLUTION OF SCIENTIFIC MEDICAL PROBLEMS IN WHICH THE ROLE PLAYED BY DIFFERENT INSTITUTIONS IS DEFINED.

UNCLASSIFIED

APPROVED FOR RELEASE: 08/09/2001 CIA-RDP86-00513R002201520016-2"

"APPROVED FOR RELEASE: 08/09/2001 CIA-RDP86-00513R002201520016-2

Public Health, Hygiene and Sanitation

USSR

KOVANOVA, V. V., Ed. Vice-President, Academy of Medical Sciences USSR

"Attention: Vibration Sickness"

Moscow, Trud, 18 Sep 70, p 4

Abstract: Drs. A. Mel'kumova and N. Ermolayeva discuss various problems associated with vibration sickness. A concerted effort is being made to reduce the incidence of this affliction, which occurs among workers who are constantly subjected to vibrations and is characterized by disturbances in blood circulation which affect the vessels of the brain and membranes. The illness can also be caused by a hand-held vibrator, in which case the fine blood vessels and nerve endings in the muscles and skin are affected. The increased impulse rate in the brain has a negative effect on the state of higher nervous activity. Perpipheral, cerebral, and intermediate forms of vibration sickness are distinguished. The peripheral form has been known for over 50 years and is initially characterized by a feeling of numbness in the arms. In the cerebral form, the patient complains of headaches, is sensitive to noise, and has dizzy spells. Arterial blood pressure drops in the early stages; constant hypotension or, on the other hand, elevated arterial blood

1/2

APPROVED FOR RELEASE: 08/09/2001 CIA-RDP86-00513R002201520016-2"

"APPROVED FOR RELEASE: 08/09/2001 CIA-RDP86-00513R002201520016-2

USSR

KOVANOVA, V. V., Trud, 18 Sep 70, p 4

pressure occurs in the later stages. Cure is difficult. At many health resorts in the Soviet Union, treatment ranges from drinking sulfur-containing waters to baths in radium-containing water. Complete cure has not been achieved. Yu. Kulichkov discusses measures being taken against vibration sickness at enterprises in Rostovskaya Oblast. A vibration-absorbing device inserted between the operator and the vibrating tool has been tested at several factories. Exposure time to vibrating tools may also be decreased when the disease begins to appear, although workers often do not identify the initial symptoms and continue to work with the vibrating tools. The best solution appears to be reassignment as soon as the initial symptoms are detected.

2/2

APPROVED FOR RELEASE: 08/09/2001 CIA-RDP86-00513R002201520016-2"

"APPROVED FOR RELEASE: 08/09/2001 CIA-RDP86-00513R002201520016-2

AA0044653

UR 0482 Kovantsev, N.S.

Soviet Inventions Illustrated, Section II Electrical, Derwent, 1/70

239404 AUTOMATIC STEERING INSTALLATION for ships.

To reduce the time required to regain a set course, also to extend the life of steering gear by reducing the number of movements necessary in a given time, the following additional components are incorporated: A unit for measuring constant integration of the integrator unit, two full-wave rectifiers, a comparison unit, four diodes, threshold discriminator units, keys, and two 'AND' units connected by their first inputs via one threshold discriminator unit, the comparison unit, and a full wave rectifier, to the output of a phase sensitive rectifier to which are connected the second inputs of the 'AND' units via two cross-connected diodes and a pair of threshold discriminator units. The third inputs of the 'AND' units are connected via a second pair of threshold discriminator units and cross connected diodes to the output of a different-

1/3

4

19771375

APPROVED FOR RELEASE: 08/09/2001 CIA-RDP86-00513R002201520016-2"

"APPROVED FOR RELEASE: 08/09/2001 CIA-RDP86-00513R002201520016-2

AA0044653

ial unit which has its output connected to the unit which varies the constant integration of the integrator units. The outputs of the 'AND' units are connected via keys to the steering servo drive. Diagram components: gyro-compass course data unit (1), phase sensitive rectifier (2), differential unit (3), constant integration time measuring unit (4), rectifier (5), integrator unit (6), servo-drive (7), steering (8), full wave rectifier (9), comparison unit (10), threshold discriminator unit (11), 'AND' units (12 & 13), threshold discriminator units (14-17) keys (18 & 19).

16.10.67 as 1191342/18-24. N.S. [redacted] & YU.L. LITVAK (11.8.69) Bul 11/18.3.69. Class 21c, 65f-2. Int.Cl.G 05d, B 60k.

2/3

19771376

APPROVED FOR RELEASE: 08/09/2001 CIA-RDP86-00513R002201520016-2"

"APPROVED FOR RELEASE: 08/09/2001 CIA-RDP86-00513R002201520016-2

AA0044653

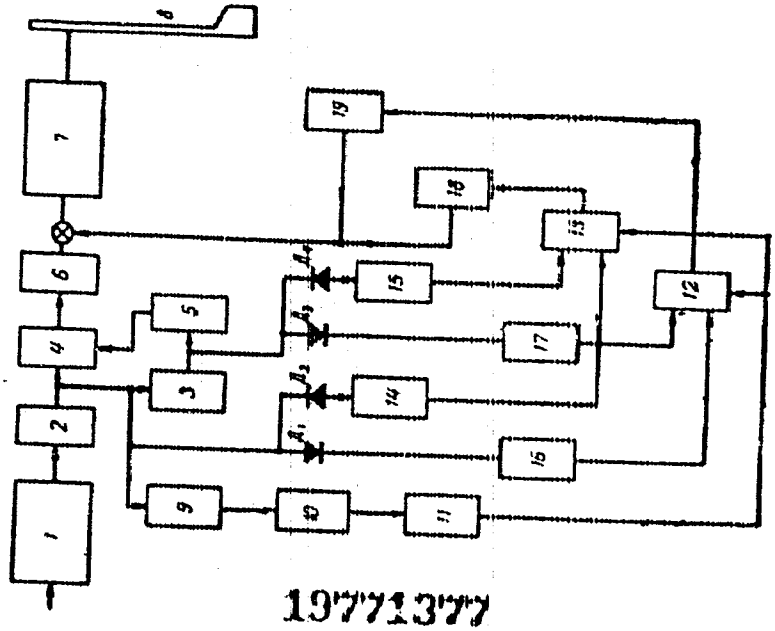

3/3

19771377

E6

APPROVED FOR RELEASE: 08/09/2001 CIA-RDP86-00513R002201520016-2"

"APPROVED FOR RELEASE: 08/09/2001 CIA-RDP86-00513R002201520016-2

USSR

UDC 513.71

KOVANTSOV, N. I., KURBANOV, N., Kiev State University imeni T. G. Shevchenko

"Canonical Transversal System of Complexes"

Ashkabad, Izvestiya Akademii Nauk Turkmenskoy SSR, Seriya Fiziko-Tekhnicheskikh, Khimicheskikh i Geologicheskikh Nauk, No. 1, 1971, pp 3-10

Abstract: A canonical system of congruences is defined as follows: a set of four congruences K_1, K_2, K_3, K_4 is taken between the rays of which there is a one-to-one correspondence. Let l_1, l_2, l_3, l_4 denote the corresponding rays. It is required that the foci of the congruences lie on two lines or transversals. The points of intersection of the rays of the congruences with the transversals i.e., the foci of the congruences form two complex relationships W and W'. By taking the transversals as the directrices of the linear congruences, one obtains a two-parameter family of congruences: a transversal system. If a set of four pairs of lines intersects a certain quadric of lines L_1, L_2, L_3, L_4, it indicates that all pairs of transversals are generatrices of one family of a certain quadric and that the lines L_1, L_2, L_3, L_4 necessarily belong to another family. This family is called a transversal. The points of contact of each set of four corresponding

1/2

USSR

APPROVED FOR RELEASE: 08/09/2001 CIA-RDP86-00513R002201520016-2"

"APPROVED FOR RELEASE: 08/09/2001 CIA-RDP86-00513R002201520016-2

KOVANTSOV, N. I., KURBANOV, N., Izvestiya Akademii nauk [illegible]
Fiziko-tekhnicheskikh, khimicheskikh i geologicheskikh nauk, No. 1, 1971, pp 3-10

linear surfaces of complexes determine the complex relationship W on the corresponding transversals. If one set of three rays L_1, L_2, L_3 is fixed and the ray L_4 is moved along the transversal quadric, the complex relationship W changes. In the general case it changes when one goes from one set of four rays to another in a given set of four complexes. Discussed here is the case in which the complex relationship in the last transition remains constant. A one-parameter system of complexes obtained, which is called a canonical transversal system of complexes.

2/2

APPROVED FOR RELEASE: 08/09/2001 CIA-RDP86-00513R002201520016-2"

"APPROVED FOR RELEASE: 08/09/2001 CIA-RDP86-00513R002201520016-2

1/2 021 UNCLASSIFIED PROCESSING DATE--18SEP70

TITLE--THERMAL AND OXIDATIVE THERMAL DEGRADATION OF AROMATIC AND AROMATIC ALIPHATIC POLYAMIDES AND POLYUREAS -U-

AUTHOR-(05)-FEDOTOVA, O.YA., CHIBISOVA, YE.I., KOLESNIKOV, G.S., GORDKHOV, V.L., KOVARSKAYA, B.M.

COUNTRY OF INFO--USSR

SOURCE--VYSOKOMOL. SOEDIN., SER. A 1970, 12(1) 26-30

DATE PUBLISHED--------70

SUBJECT AREAS--CHEMISTRY

TOPIC TAGS--THERMAL DEGRADATION, OXIDATIVE DEGRADATION, POLYAMIDE COMPOUND, POLYUREA, DIAMINE, ORGANIC ISOCYANATE, COPOLYMERIZATION, POLYMER CROSSLINKING, POLYCONDENSATION

CONTROL MARKING--NO RESTRICTIONS

DOCUMENT CLASS--UNCLASSIFIED

PROXY REEL/FRAME--1987/1195 STEP NO--UR/0459/70/012/001/0026/0030

CIRC ACCESSION NO--AP0104561

UNCLASSIFIED

APPROVED FOR RELEASE: 08/09/2001 CIA-RDP86-00513R002201520016-2"

"APPROVED FOR RELEASE: 08/09/2001 CIA-RDP86-00513R002201520016-2

2/2 021 UNCLASSIFIED PROCESSING DATE--18SEP70

CIRC ACCESSION NO--AP0104561

ABSTRACT/EXTRACT--(U) GP-0- ABSTRACT. POLYAMIDES (PREPD. BY INTERFACIAL POLYCONDENSATION) AND POLYUREAS (PREPD. BY COPOLYMN. OF DIAMINES WITH DIISOCYANATES SUCH AS HEXAMETHYLENE DIISOCYANATE), E.G., POLY(DITOLYL,METHANEFURMARAMIDE) (I), POLY(DITOLYL-N,N'-DIETHYLFUMARAMIDE) (II), POLY(DITOLYLMETHANE-N,N'-DIETHYLADIPAMIDE) (III), POLY(DITOLYLMETHANEHEXAMETHYLENEUREA) (IV) AND POLY(DITOLYLMETHANEFUMARAMIDE) (I), POLY(DITOLYL-N,N'-DIETHYLFUMARAMIDE) TOLYLMETHANE MOIETY IS DERIVED FROM 4,4'-METHYLENEDI-O-TOLUIDINE OR FROM 4,4'-METHYLENEBIS(N-ETHYL-O-TOLUIDINE)) WERE DEGRADED AT 200-320DEGREES, I, II, AND III WERE MORE STABLE THAN IV OR V. I AND II EXHIBITED HIGHER THERMAL STABILITY THAN III. THE OXION. OF POLYAMIDES AND POLYUREAS (BASED ON A PRIMARY DIAMINE) WAS ACCOMPANIED BY CROSSLINKING. CO, CO SUB2, H SUB2 O, AND ACH (IDENTIFIED BY POLAROGRAPHY AND CHROMATOG.) RESULTED FROM THE OXIDATIVE THERMAL DEGRADATION OF THE CITED POLYMERS.

APPROVED FOR RELEASE: 08/09/2001 CIA-RDP86-00513R002201520016-2"

"APPROVED FOR RELEASE: 08/09/2001 CIA-RDP86-00513R002201520016-2

1/2 016 UNCLASSIFIED PROCESSING DATE--13NOV70

TITLE--KINETICS OF CATION ADSORPTION FROM SOLUTIONS OF LOW CONCENTRATIONS BY ANION EXCHANGERS BASED ON POLYETHYLENEPOLYAMINES -U-

AUTHOR-(05)-ASAMBADZE, G.D., KOPYLOVA, V.D., SALDADZE, K.M., GINTSBERG, E.G., KOVARSKAYA, B.M.

COUNTRY OF INFO--USSR

SOURCE--ZH. FIZ. KHIM. 1970, 44(1), 257

DATE PUBLISHED--------70

SUBJECT AREAS--CHEMISTRY

TOPIC TAGS--ANION EXCHANGE RESIN, COPPER, COBALT, NICKEL, CATION, POLYETHYLENE, POLYAMINE, DIFFUSION COEFFICIENT

CONTROL MARKING--NO RESTRICTIONS

DOCUMENT CLASS--UNCLASSIFIED

PROXY REEL/FRAME--1989/0473 STEP NO--UR/0076/70/044/001/0257/0257

CIRC ACCESSION NO--AP0107079

UNCLASSIFIED

APPROVED FOR RELEASE: 08/09/2001 CIA-RDP86-00513R002201520016-2"

"APPROVED FOR RELEASE: 08/09/2001 CIA-RDP86-00513R002201520016-2

2/2 016 UNCLASSIFIED PROCESSING DATE--13NOV70

CIRC ACCESSION NO--AP0107079

ABSTRACT/EXTRACT--(U) GP-0- ABSTRACT. THE ADSORPTION OF CU PRIME2 POSITIVE, CO PRIME2 POSITIVE, OR NI PRIME2 POSITIVE CATIONS ON THE TITLE EXCHANGER BELOW 250DEGREES IS GOVERNED BY THE DIFFUSION RATE INTO THE EXCHANGER GRAINS. ABOVE 35DEGREES AND GREATER THAN OR EQUAL TO 0.001M CATION CONCN. THE DIFFUSION INTO THE EXCHANGER GEL PARTICLES IS THE PREDOMINANT FACTOR. THE DIFFUSION COEFFS. ARE 4.57 TIMES 10 PRIME NEGATIVE9, 5.27 TIMES 10 PRIME NEGATIVE9, OR 6.4 TIMES 10 PRIME NEGATIVE9 CM PRIME2-SEC FOR CU PRIME2 POSITIVE, OR N PRIME2 POSITIVE, RESP.

UNCLASSIFIED

APPROVED FOR RELEASE: 08/09/2001 CIA-RDP86-00513R002201520016-2"

"APPROVED FOR RELEASE: 08/09/2001 CIA-RDP86-00513R002201520016-2

1/2 033 UNCLASSIFIED PROCESSING DATE--09OCT70

TITLE--PRODUCTS OF THE THERMAL DEGRADATION OF SOME POLYETHERS -U-

AUTHOR-(02)-BLYUMENFELD, A.B., KOVARSKAYA, B.M.

COUNTRY OF INFO--USSR

SOURCE--VYSOKOMOL. SOEDIN., SER. A 1970, 12(3), 633-40

DATE PUBLISHED--------70

SUBJECT AREAS--CHEMISTRY

TOPIC TAGS--THERMAL DEGRADATION, POLYMER, ETHER, ACTIVATION ENERGY, FREE RADICAL, DIENE, CHEMICAL REACTION MECHANISM, METHYLENE

CONTROL MARKING--NO RESTRICTIONS

DOCUMENT CLASS--UNCLASSIFIED

PROXY REEL/FRAME--1992/0287 STEP NO--UR/0459/70/012/003/0633/0640

CIRC ACCESSION NO--AP0111481

UNCLASSIFIED

APPROVED FOR RELEASE: 08/09/2001 CIA-RDP86-00513R002201520016-2"

"APPROVED FOR RELEASE: 08/09/2001 CIA-RDP86-00513R002201520016-2

2/2 033 UNCLASSIFIED PROCESSING DATE--09OCT70

CIRC ACCESSION NO--AP0111481

ABSTRACT/EXTRACT--(U) GP-0- ABSTRACT. THE THERMAL DEGRADATION OF (-(CH SUB2) SUB4O-) SUBN (I) GAVE CH SUB4, ETHANE, ETHYLENE, PROPANE, PROPYLENE, BUTANE, ACH, ETCHO, PRCHO, TETRAHYDROFURAN, H, H SUB2 O, BUOH, AND LARGER THAN OR EQUAL TO C SUB5 HYDROCARBONS. SIMILARLY, THE DEGRADATION OF (-(CH SUB2) SUB6 O-) SUBN (II) GAVE SATD. AND C SUB2-6 UNSATD. HYDROCARBONS CONTG. C SUB1-6 ALDEHYDES, H, H SUB2 O, AND TRACES OF HEXANONE. THE DECOMPN. OF POLYDIOXOLANE (III) GAVE MAINLY ETHYLENE, ETHANE, HCO SUB2 ET, ACH, AND CH SUB4. THE THERMAL STABILITY AT IS SIMILAR TO 10 PRIME NEGATIVE3 MM DECREASED IN THE SERIES II GREATER THAN I GREATER THAN III; HOWEVER THE OVERALL DECOMPN. ACTIVATION ENERGY, AS DETD. FROM THE CONVERSION VS. TIME GRAPHS, WAS APPROX. THE SAME (50 PLUS OR MINUS 2 KCAL-MOLE). A COMMON DECOMPN. MECHANISM, INVOLVING FREE RADICAL DIENE INTERACTIONS, IS PROPOSED FOR ALL 3 POLYETHERS.

UNCLASSIFIED

APPROVED FOR RELEASE: 08/09/2001 CIA-RDP86-00513R002201520016-2"

"APPROVED FOR RELEASE: 08/09/2001 CIA-RDP86-00513R002201520016-2

Acc. Nr. AP0048831

Abstracting Service: CHEMICAL ABST.

Ref. Code UR0459

90954c Thermal degradation of polyformaldehyde. Blyumenfel'd, A. B.; Kotrelev, M. V.; Kovarskaya, B. M. (Nauch.-Issled. Inst. Plast. Mass, Moscow, USSR). Vysokomol. Soedin., Ser. A 1970, 12(1), 81-8 (Russ). Polyformaldehyde dicl (I), polytrioxane, polyformaldehyde diacetate, 98:2 trioxane-dioxolane copolymer (II), and $MeO(CH_2O)_nMe$ (III) (model compds., n = 1-4) were thermally degraded under a const. vacuum of 10^{-4} mm. The degradation of III gave HCHO (>50%), Me_2O, $CH_2(OMe)_2$, and low-mol.-wt. fragments of III. DTA and thermogravimetric anal. curves of I, polyformaldehyde diacetate, and II were a function of the mol. wt. The degradation kinetics parameters of I in the solid phase were dependent on the structure of the polymer. The thermal degradation of pure I (excluding its stable portion) involved reversible depolymn. (H. Pennewiss, et al., 1967). The thermal degradation of the stable portion of I and of II gave H, HCO_2Me, trioxane, and higher oligomers, suggesting that the breakdown of C-O-C bonds in III followed a radical mechanism. CKJR

1/1

REEL/FRAME
19800598

APPROVED FOR RELEASE: 08/09/2001 CIA-RDP86-00513R002201520016-2"

"APPROVED FOR RELEASE: 08/09/2001 CIA-RDP86-00513R002201520016-2

Acc. Nr. AP0045180 Abstracting Service: CHEMICAL ABST. 5-70 Ref. Code UR0191

91089m **Stabilization of formaldehyde homo- and copolymers.** Gur'yanova, V. V.; Kovarskaya, B. M.; Korelev, M. V.; Akutin, M. S. (USSR). *Plast. Mass.* 1970, (1), 46-7 (Russ). Polyformaldehyde (I) (with blocked terminal groups) and dioxolane–trioxane copolymer (II) were subjected to oxidative thermal degradation in the presence of various stabilizers. The degradation of I was inhibited by TiO_2 (rutile), presumably due to the formation of a more dense supramol. structure inhibiting the diffusion of O into I. The degradation of II was most effectively inhibited by a ternary compn. consisting of an antioxidant 22-46 [2,2'-methylenebis(4-methyl-6-*tert*-butylphenol)], $H_2NC(:NH)NHCN$, and TiO_2. CKJR

REEL/FRAME
19780080

APPROVED FOR RELEASE: 08/09/2001 CIA-RDP86-00513R002201520016-2"

"APPROVED FOR RELEASE: 08/09/2001 CIA-RDP86-00513R002201520016-2

UNCLASSIFIED PROCESSING DATE--30OCT70

1/2 024

TITLE--STABILIZATION OF POLYCARBONATES -U-

AUTHOR-(05)-KOVARSKAYA, B.M., KOTRELEV, V.N., KIRPICHNIKOV, P.A., LEVANTOVSKAYA, I.I., ITINSKAYA, G.P.

COUNTRY OF INFO--USSR

K

SOURCE--USSR 264,689

REFERENCE--OTKRYTIYA, IZOBRET., PROM. OBRAZTSY, TOVARNYE ZNAKI 1970,

DATE PUBLISHED--03MAR70

SUBJECT AREAS--CHEMISTRY, MATERIALS

TOPIC TAGS--POLYCARBONATE, CHEMICAL STABILIZER, LOW TEMPERATURE EFFECT, ORGANIC PHOSPHORUS COMPOUND, ARYL PHOSPHINITE, CHEMICAL PATENT

CONTROL MARKING--NO RESTRICTIONS

DOCUMENT CLASS--UNCLASSIFIED

PROXY REEL/FRAME--3002/1468 STEP NO--UR/0482/70/000/000/0000/0000

CIRC ACCESSION NO--AA0128867

UNCLASSIFIED

APPROVED FOR RELEASE: 08/09/2001 CIA-RDP86-00513R002201520016-2"

"APPROVED FOR RELEASE: 08/09/2001 CIA-RDP86-00513R002201520016-2

UNCLASSIFIED PROCESSING DATE--30OCT70

2/2 024

CIRC ACCESSION NO--AA0128867

ABSTRACT/EXTRACT--(U) GP-0- ABSTRACT. POLYCARBONATES ARE STABILIZED AND TREATED AT LOW TEMPS. USING 0.1-1 WT.PERCENT POLYPHOSPHINITE STABILIZERS (I, N EQUALS 5-10).

UNCLASSIFIED

APPROVED FOR RELEASE: 08/09/2001 CIA-RDP86-00513R002201520016-2"

"APPROVED FOR RELEASE: 08/09/2001 CIA-RDP86-00513R002201520016-2

1/2 021 UNCLASSIFIED PROCESSING DATE--04DEC70

TITLE--KINETICS OF ION EXCHANGE ON POLYSTYRENE TYPE SULFONIC CATION EXCHANGERS CROSSLINKED WITH M AND P-DIVINYLBENZENE -U-

AUTHOR-(04)-BELFER, S.I., SALDADZE, K.M., GINTSBERG, E.G., KOVARSKAYA, B.M.

COUNTRY OF INFO--USSR

SOURCE--ZH. FIZ. KHIM. 1970, 44(4), 1104-5

DATE PUBLISHED--------70

SUBJECT AREAS--CHEMISTRY

TOPIC TAGS--POLYMERIZATION, STYRENE, BUTADIENE, BENZENE, SULFONATION, ION EXCHANGE RESIN, CHEMICAL KINETICS

CONTROL MARKING--NO RESTRICTIONS

DOCUMENT CLASS--UNCLASSIFIED

PROXY REEL/FRAME--3007/0791 STEP NO--UR/0076/70/044/004/1104/1105

CIRC ACCESSION NO--AP0136225

UNCLASSIFIED

APPROVED FOR RELEASE: 08/09/2001 CIA-RDP86-00513R002201520016-2"

"APPROVED FOR RELEASE: 08/09/2001 CIA-RDP86-00513R002201520016-2

2/2 021 UNCLASSIFIED PROCESSING DATE--04DEC70

CIRC ACCESSION NO--AP0136225

ABSTRACT/EXTRACT--(U) GP-0- ABSTRACT. THE COPOLYM. OF STYRENE WITH M-DIVINYLBENZENE (I) OR P-DIVINYLBENZENE (II) IN THE PRESENCE OF BZ SUB2 O SUB2, FOLLOWED BY SULFONATION GAVE ION EXCHANGE RESINS. THE POLAROGRAPHIC STUDY OF THE ION EXCHANGE RATES OF BU SUB4 N PRIME POSITIVE WITH H PRIME POSITIVE SHOWED THAT THE RESIN BASED ON I EXCHANGED THIS BULKY ION (RADIUS 12.2 A) FASTER THAN THE RESIN BASED ON II. THE DIFFUSION COEFFS. FOR THESE 2 RESINS WERE RESP. 3.8 TIMES 10 PRIME NEGATIVE8 AND 1.7 TIMES 10 PRIME NEGATIVE8 CM PRIME2 -SEC WHEN 6 MOLE PERCENT OF I OR II WERE PRESENT IN THE COPOLYMER. THE ION EXCHANGE CAPACITIES WERE NEARLY THE SAME: 4.82 AND 4.84 MEQ-G.

FACILITY: NAUCH.-ISSLED. INST. PLASTMASS, MOSCOW, USSR.

UNCLASSIFIED

APPROVED FOR RELEASE: 08/09/2001 CIA-RDP86-00513R002201520016-2"

"APPROVED FOR RELEASE: 08/09/2001 CIA-RDP86-00513R002201520016-2

USSR UDC 541.183.5:546.79

SHEYDINA, L. D., ROZOVSKAYA, N. G., and KOVARSKAYA, Ye. N.

"A Method of Studying Radioelement Sorption"

Leningrad, Radiokhimiya, Vol XIII, No 2, 1971, pp 180-184

Abstract: A study was made of the methods of investigating the sorption of radioelements. The sorption of $Pu^{(IV)}$ on glass as a function of the pH of a solution (freshly prepared) with a plutonium concentration of $4 \cdot 10^{-8}$M, the sorption of $Pu^{(IV)}$ on glass as a function of the pH of a solution made of aged solutions with a plutonium concentration of $4 \cdot 10^{-8}$M and the sorption of $Pu^{(IV)}$ on glass as a function of the pH of a solution made of freshly prepared solutions with a plutonium concentration of $4 \cdot 10^{-8}$M are plotted. The method of sorption from aged solutions is described, and it is found to be applicable when studying the sorption of radioelements when investigating their state in solution.

The results obtained by various authors are discussed, and an experiment is described in which the causes of contradictory data of various authors

1/2

APPROVED FOR RELEASE: 08/09/2001 CIA-RDP86-00513R002201520016-2"

"APPROVED FOR RELEASE: 08/09/2001 CIA-RDP86-00513R002201520016-2

USSR

SHEYDINA, L. D., et al., Radiokhimiya, Vol XIII, No 2, 1971, pp 180-184

obtained in the study of the sorption of $Pu^{(IV)}$ under various experimental conditions are established. The sorption mechanism is discussed in detail and reasons are given for the various shapes of the curves. Both experimental errors and impurities are given as causes for these differences.

2/2

APPROVED FOR RELEASE: 08/09/2001 CIA-RDP86-00513R002201520016-2"

"APPROVED FOR RELEASE: 08/09/2001 CIA-RDP86-00513R002201520016-2

UDC 54-168:546.799.4

USSR

SHEYDINA, L. D. and KOVARSKAYA, Ye. N.

"Colloidal State of Pu(IV) in Aqueous Solutions"

Moscow, Radiokhimiya, Vol 12, No 2, 1970, pp 253-259

Abstract: A study was made of the state of Pu(IV) in a wide range of concentrations: 10^{-10} to 10^{-5} M. To extend the range of plutonium concentrations, the isotopes ^{239}Pu (T = 2.4· 10^4 years) and ^{238}Pu (T = 92 years) were used. The valence state of plutonium was verified spectrophotometrically or (for small amounts) by coprecipitation with zirconium phenylarsonate. Pu(IV) in the starting solution was dissolved in 1.5 N nitric acid. Working solutions of Pu(IV) were prepared by adding redistilled ammonia or nitric acid; water was doubly distilled. The state of Pu(IV) was investigated by three methods: adsorption, centrifuging, and electrophoresis. Curves describing the sorption of Pu(IV) -- in the 10^{-10} to 10^{-5} M concentration range -- on quartz glass (from solutions in which equilibrium was established between the different forms of plutonium) as a function of solution pH are characterized by a steep rise and a maximum in the region pH $\simeq$ 3. Apparently this change is due to appearance of hydrolyzed cations of Pu(IV) in which the number of hydroxyl groups per plutonium rises with rising solution pH; from 1 to 3.

1/2

APPROVED FOR RELEASE: 08/09/2001 CIA-RDP86-00513R002201520016-2"

"APPROVED FOR RELEASE: 08/09/2001 CIA-RDP86-00513R002201520016-2

USSR

SHEYDINA, L. D., et al, Radiokhimiya, Vol 12, No 2, 1970, pp 253-259

It is also concluded that polymerization of plutonium is the reason for the shift in the maximum on the sorption curve characterizing the onset of hydroxide formation, toward the high pH values in the transition from trace concentrations of the element to concentrations on the order of 10^{-6} M.

2/2

APPROVED FOR RELEASE: 08/09/2001 CIA-RDP86-00513R002201520016-2"

"APPROVED FOR RELEASE: 08/09/2001 CIA-RDP86-00513R002201520016-2

1/2 029 UNCLASSIFIED PROCESSING DATE--02OCT70

TITLE--KINETICS OF POLY(ETHYLENE TEREPHTHALATE) CRYSTALLIZATION STUDIED BY A PARAMAGNETIC PROBE METHOD -U-

AUTHOR-(03)-KOVARSKIY, A.L., VASSERMAN, A.M., BUCHACHENKO, A.L.

COUNTRY OF INFO--USSR

SOURCE--VYSOKOMOL. SOEDIN., SER. B 1970, 12(3), 211-14

DATE PUBLISHED--------70

SUBJECT AREAS--CHEMISTRY

TOPIC TAGS--POLYETHYLENE TEREPHTHALATE, CRYSTALLIZATION, REACTION KINETICS, EPR, CALCULATION, ACTIVATION ENERGY, PLASTIC FILM, AMORPHOUS POLYMER

CONTROL MARKING--NO RESTRICTIONS

DOCUMENT CLASS--UNCLASSIFIED

PROXY REEL/FRAME--1992/0313 STEP NO--UR/0460/70/012/003/0211/0214

CIRC ACCESSION NO--AP0111507

UNCLASSIFIED

APPROVED FOR RELEASE: 08/09/2001 CIA-RDP86-00513R002201520016-2"

"APPROVED FOR RELEASE: 08/09/2001 CIA-RDP86-00513R002201520016-2

2/2 029 UNCLASSIFIED PROCESSING DATE--02OCT70

CIRC ACCESSION NO--AP0111507

ABSTRACT/EXTRACT--(U) GP-0- ABSTRACT. CRYSTN. KINETICS, DETD. BY USE OF 4,HYDROXY, 2,2,6,6,TETRAMETHYLPIPERIDINOOXY AS THE PARAMAGNETIC PROBE. WERE 1ST ORDER FOR AMORPHOUS POLY(ETHYLENE TEREPHTHALATE) (I). CRYSTN. RATES (THE TIME REQUIRED TO REACH THE GLASS TRANSITION) DETD. BY EPR WERE COMPARABLE TO THOSE DETD. BY D. CHANGES. THE CALCD. ACTIVATION ENERGIES OF CRYSTN. AND TEMP. RANGES STUDIED FOR UNORIENTED AND ORIENTED I WERE 20 PLUS OR MINUS 2 KCAL-MOLE AND 33 PLUS OR MINUS 2 KCAL-MOLE AND 110-250DEGREES AND 130-400DEGREES, RESP. PRELIMINARY COLD DRAWING (20DEGREES, 500PERCENT) OF AMOR PHOUS I FILMS DECREASED RATE CONSTS. AND INCREASED CRYSTN. ACTIVATION ENERGIES.

UNCLASSIFIED

APPROVED FOR RELEASE: 08/09/2001 CIA-RDP86-00513R002201520016-2"

"APPROVED FOR RELEASE: 08/09/2001 CIA-RDP86-00513R002201520016-2

Acc. Nr. AP0102303 Abstracting Service: CHEMICAL ABST. 6-70 Ref. Code UR 0460

- 112496j Structure and molecular motion in blended polymers studied by a paramagnetic probe method. Kovarskii, A. L.; Arkina, S. N.; Vasserman, A. M. (Inst. Khim. Fiz., Moscow, USSR). *Vysokomol. Soedin., Ser. B* 1970, 12(1), 39-41 (Russ). The addn. of triethylene glycol dimethacrylate (I) and cumene peroxide to butadiene-acrylonitrile rubber (II) and heating to achieve ~85% polymn. of I reduces the rotational mol. motion of II due to the formation of the crosslinked polymethacrylate structure. The degree of the mol. motion decrease was detd. by measuring the decrease of the rotational periods (τ) of 2,2,6,6-tetramethylpiperidinooxy or of its 4-hydroxy- or 4-oxo-derivs., added to II, by the paramagnetic probe method (A. M. Vasserman, *et al.*, 1967, 1968, 1969). The decrease of τ to 10^{-1} sec corresponding to "frozen" free radicals was not uniform at various II sample locations, indicating nonhomogeneity regions. CFJR

Y1 CB 7

REEL/FRAME
19860253

APPROVED FOR RELEASE: 08/09/2001 CIA-RDP86-00513R002201520016-2"

"APPROVED FOR RELEASE: 08/09/2001 CIA-RDP86-00513R002201520016-2

L/3 025 UNCLASSIFIED PROCESSING DATE--02OCT70

TITLE--INDIRECT EVALUATION OF THE POROSITY OF ELECTROLYTIC DEPOSITS -U-

AUTHOR-(02)-KOVARSKIY, N.YA., GOLUBEV, V.N.

COUNTRY OF INFO--USSR

SOURCE--ZH. PRIKL KHIM. (LENINGRAD) 1970, 43(2) 348-54

DATE PUBLISHED--------70

SUBJECT AREAS--MATERIALS, MECH., IND., CIVIL AND MARINE ENGR

TOPIC TAGS--ELECTRODEPOSITION, METAL CRACKING, PITTING CORROSION, CRYSTAL GROWTH, COPPER ZINC

CONTROL MARKING--NO RESTRICTIONS

DOCUMENT CLASS--UNCLASSIFIED

PROXY REEL/FRAME--1992/0771 STEP NO--UR/0080/70/043/002/0348/0354

CIRC ACCESSION NO--AP0111959

UNCLASSIFIED

APPROVED FOR RELEASE: 08/09/2001 CIA-RDP86-00513R002201520016-2"

"APPROVED FOR RELEASE: 08/09/2001 CIA-RDP86-00513R002201520016-2

2/3 025 UNCLASSIFIED PROCESSING DATE--02OCT70

CIRC ACCESSION NO--AP0111959

ABSTRACT/EXTRACT--(U) GP-0- ABSTRACT. THE INFLUENCE OF THE MICRO THROWING POWER (MTP) OF PLATING ELECTROLYTES ON THE POROSITY OF DEPOSITS WAS STUDIED IN AN ATTEMPT TO ESTABLISH A CORRELATION BETWEEN BOTH VALUES. THE MTP WAS DFTD. AS THE RATIO BETWEEN THE THICKNESS OF THE DEPOSITS AT THE PINNACLES AND VALLEYS OF A GROOVED SUBSTRATE, OR AS THE RATIO BETWEEN THE C.DS. OF A ROTATING DISK ELECTRODE AT 2 DIFFERENT SPEEDS UNDER POTENTIOSTATIC CONDITIONS. CU AND ZN WAS DEPOSITED ON STAINLESS STEEL SUBSTRATES, AND NI WAS DEPOSITED ON CU SUBSTRATES FROM CONVENTIONAL SIMPLE SULFATE BATHS. ALL SUBSTRATES WERE MECH. POLISHED UNTIL SURFACE ROUGHNESS WAS SMALLER THAN 0.01 MU, AS CHECKED WITH A PROFILOGRAPH. A SIMPLIFIED PORE FORMATION MECHANISM AND MODEL IS PROPOSED BASED ON THE INITIAL CRYSTAL NUCELATION PROCESSES AND THE SUBSEQUENT GROWTH OF THE CRYSTALLITES. IT IS ASSUMED THAT PITTING OR STRESS CRACKING POROSITY IS EXCLUDED AND SUBSTRATES ARE IDEAL. THE RATIO BETWEEN THE CRYSTAL GROWTH RATE IS VERTICAL, V SUBV, AND HORIZONTAL, V SUBH, DIRECTION, ASSUMING A RANDOM ORIENTATION OF THE CRYSTALS WITH RESPECT TO THE SUBSTRATE, CAN BE EXPRESSED BY THE EQUATION: V SUBV-V SUBH CONGRUENT TO CONST. (1-MTP), HENCE POROSITY (P) PER UNIT DEPOSIT THICKNESS IS INVERSELY PROPORTIONAL TO MTP. THE THEORETICALLY EVALUATED POROSITY MTP DATA WERE COMPARED WITH DIRECT MEASUREMENTS INVOLVING CONVENTIONAL MICROSCOPIC PORE DETN. TECHNIQUES. EXPTS. WERE PERFORMED AT DIFFERENT C.DS. AND BATH COMPNS. GOOD AGREEMENT EXISTS BETWEEN BOTH DATA, PROVING THE CORRECTNESS OF THE PROPOSED MODEL.

UNCLASSIFIED

APPROVED FOR RELEASE: 08/09/2001 CIA-RDP86-00513R002201520016-2"

"APPROVED FOR RELEASE: 08/09/2001 CIA-RDP86-00513R002201520016-2

3/3 025 UNCLASSIFIED PROCESSING DATE--02OCT70

CIRC ACCESSION NO--AP0111959

ABSTRACT/EXTRACT--AN EXPRESSION IS PROPOSED FOR THE EVALUATION OF P DURING CU, ZN, OR NI PLATING BY INDIRECT MEASUREMENTS OF MTP: P EQUALS KK(1-MTP), WHERE K IS A COEFF. OF PROPORTIONALITY, DEPENDING ON THE NATURE OF THE METAL AND THE THICKNESS OF THE COATING, AND K EQUALS H-DELTAQ, WHERE H IS THE HEIGHT OF INITIAL ROUGHNESS AND DELTAQ THE QUANTITU OF ELECTRICITY. EXPTL. DATA OBTAINED BY USING MTP DATA BASED ON POLARIZATION MEASUREMENTS INVOLVING C.D. DATA OF A DISK ELECTRODE AT VARIOUS RPM ARE ALSO IN GOOD AGREEMENT WITH THE PROPOSED INDIRECT POROSITY CRITERION MTP.

UNCLASSIFIED

APPROVED FOR RELEASE: 08/09/2001 CIA-RDP86-00513R002201520016-2"

"APPROVED FOR RELEASE: 08/09/2001 CIA-RDP86-00513R002201520016-2

1/2 024 UNCLASSIFIED PROCESSING DATE--23OCT70

TITLE--EFFECT OF THE MICRORELIEF OF ELECTROLYTIC COPPER AND ZINC DEPOSITS ON THEIR CORROSION RESISTANCE -U-

AUTHOR-(02)-GOLUBEV, V.N., KOVARSKIY, N.YA.

COUNTRY OF INFO--USSR

SOURCE--ZASCH. METAL. 1970, 6(1), 59-60

DATE PUBLISHED--------70

SUBJECT AREAS--MECH., IND., CIVIL AND MARINE ENGR, MATERIALS

TOPIC TAGS--CORROSION RATE, ELECTROLYTIC COPPER, ZINC PLATING, ELECTRODEPOSITION, SURFACE ROUGHNESS

CONTROL MARKING--NO RESTRICTIONS

DOCUMENT CLASS--UNCLASSIFIED

PROXY REEL/FRAME--1997/1539 STEP NO--UR/0365/70/006/001/0059/0060

CIRC ACCESSION NO--AP0120320

UNCLASSIFIED

APPROVED FOR RELEASE: 08/09/2001 CIA-RDP86-00513R002201520016-2"

"APPROVED FOR RELEASE: 08/09/2001 CIA-RDP86-00513R002201520016-2

2/2 024 UNCLASSIFIED PROCESSING DATE--23OCT7(

CIRC ACCESSION NO--AP0120320

ABSTRACT/EXTRACT--(U) GP-0- ABSTRACT. THE RATE OF CORROSION OF CU AND Z: DEPOSITS WAS INDEPENDENT OF THE CONDITIONS UNDER WHICH THEY WERE OBTAINED AND WAS DETD. PRIMARILY ON THE MICROGEOMETRY OF THE RESULTING SURFACE. THE RATE OF CORROSION IN BOTH KINDS OF DEPOSITS INCREASED WITH THE NUMERICAL VALUE OF R SUBA, DEFINED AS THE ARITHMETICAL MEAN OF THE DEVIATIONS FROM SMOOTHNESS IN THE PROFILE WHICH CHARACTERIZES THE SHAPE AND SIZE OF UNEVENNESS OF THE SURFACE. CORROSION RESISTANCE IS NOT DETD. BY THE SP. SURFACE OF THE SAMPLE BUT RATHER BY THE SHAPE, EXTENT, AND FREQUENCY OF MICROUNEVENNESS OF THE SURFACE.

UNCLASSIFIED

APPROVED FOR RELEASE: 08/09/2001 CIA-RDP86-00513R002201520016-2"

"APPROVED FOR RELEASE: 08/09/2001 CIA-RDP86-00513R002201520016-2

USSR UDC: 621.373:530.145.6

DAMASKIN, I. A., KOVARSKIY, V. A., PYSHKIN, S. L., RADAUTSAN, S. I., FERDMAN, N. A., and TEZLEVAN, V. Ye.

"Luminescence of $CdIn_2S_4$ Monocrystals in the Excitation of Ruby Laser Light by Giant Pulses"

V sb. Issled. slozhn. poluprovodnikov (Investigating Complex Semiconductors--collection of works) Kishinev, 1970, pp 85-89 (from RZh-Radiotekhnika, No. 3, March 71, No. 3, Abstract No. 3D312)

Translation: The results are given of an investigation of $CdIn_2S_4$ monocrystals in two-photon optical excitation. With an excitation intensity of about $8 \cdot 10^{25}$ kV/cm^{2}sec, a narrow intense band at 660 nm is detected in the luminescence spectrum, whose half-width decreases substantially with increasing intensity of the excitation light. The detected phenomenon is interpreted as forced radiation in the so-called phononless line. Estimates of the luminescence spectrum half-width are obtained and a model of the detected phenomenon is proposed. Four illustrations, bibliography of eight. Author's abstract.

1/1

APPROVED FOR RELEASE: 08/09/2001 CIA-RDP86-00513R002201520016-2"

"APPROVED FOR RELEASE: 08/09/2001 CIA-RDP86-00513R002201520016-2

Acc. Nr. APC105554 Abstracting Service: CHEMICAL ABST. Ref. Code 4R0449

126618n Magnetodiodes made from nickel-doped silicon. Karakushan, E. I.; Kovarskii, V. Ya.; Komarovskikh, K. F.; Kruzhanov, Yu. V.; Stareev, V. I. (USSR). *Fiz. Tekh. Poluprov.* 1970, 4(3), 628-30 (Russ). S-diodes were prepd. from Ni- and P-doped Si from the melt. The semi-insulating n-type Si platelets had a resistivity of 2 kilohm-cm, a thickness of 480-660 μ, and a diam. of the p-n junction of 150 μ (it was formed by the diffusion of evapd. Al); the 2nd contact was alloyed Au + Sb. The sensitivity to a magnetic field was characterized by the dynamic current (I) magnetosensitivity, $\gamma_I = \partial I/\partial H|_{U_s - R_L \cdot I}$, where U_s is the source voltage, R_L the load resistance, and H the magnetic field strength. The H dependence of γ_I had a sharp max., which increased with increasing U_s and decreasing R_L. The max. γ_I at room temp., with U_s = 13 V and R_L = 80 ohms, was 60 mA/kOe in a field of 1.3 kOe. The switching coeff. (ratio of the current without field to that in a field) was 70–250. The voltage magnetosensitivity, γ_U, increased with increasing I and increasing H. In a field of 5 kOe at I = 10 mA, γ_U = 6 V/kOe.

Peter Vajda

REEL/FRAME
19880569

APPROVED FOR RELEASE: 08/09/2001 CIA-RDP86-00513R002201520016-2"

"APPROVED FOR RELEASE: 08/09/2001 CIA-RDP86-00513R002201520016-2

AA0052695 KOVARSKIY YE M

UR 0482

Soviet Inventions Illustrated, Section III Mechanical and General, Derwent, 1-70

244031 CENTRALISED LUBRICATION SYSTEM e.g., of bearing units, comprising doser with electromagnetic drive, controlled by a command apparatus, and jets, differing in being mounted in a common bearing shield having channels connecting the consumption cavity to the dosing cavity and to the jet via the pressure cavity. This improves reliability with remote-controlled automatic lubricant supply.
18.3.68. as 1226228/25-8, KOVARSKII, E.M. et al. (26.9.69) Bul. 17/14.5.69. Class 47e, Int. Cl. F 16n.

11

Kovarskiy, Ye.M.; Bazanov, S.V.; Prokhorov, M.V.; Zharov, P.V.

1/2

19821485

APPROVED FOR RELEASE: 08/09/2001 CIA-RDP86-00513R002201520016-2"

"APPROVED FOR RELEASE: 08/09/2001 CIA-RDP86-00513R002201520016-2

AA0052695

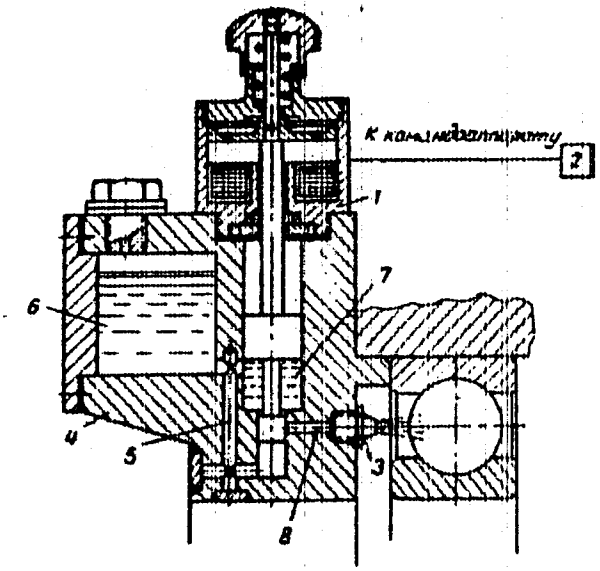

2/2

19821486

APPROVED FOR RELEASE: 08/09/2001 CIA-RDP86-00513R002201520016-2"

"APPROVED FOR RELEASE: 08/09/2001 CIA-RDP86-00513R002201520016-2

USSR

UDC 546.791

KOVBA, L. M.

"Crystalline Structures of Double Uranium Oxides"

Leningrad, Radiokhimiya, Vol 13, No 6, 1971, pp 909-910

Abstract: Double uranium oxides UV_2O_6, UVO_5 and β-UMo_2O_8 were studied in the past; in this paper new, more accurate data are reported. UV_2O_6 crystallizes similarly to $PbSb_2O_6$ with a= 4.988±0.002Å, c= 4.768±0.002Å, x_0= 0.354±0.008; z_0= 0.263±0.008. The UVO_5 crystallizes in rhombic syngony with a= 4.131±0.005Å, b= 12.343±0.012Å, c= 7.210±0.006Å, β-Mo_2UO_8 also crystallizes in rhombic syngony with a= 7.327±0.004, b= 20.02±0.01, c= 4.115±0.002Å.

1/1

APPROVED FOR RELEASE: 08/09/2001 CIA-RDP86-00513R002201520016-2"

"APPROVED FOR RELEASE: 08/09/2001 CIA-RDP86-00513R002201520016-2

USSR

UDC 541.451:546.791

KUZ'MICHEVA, YE. U., KOVBA, L. M., and IPPOLITOVA, YE. A.

"Oxidation of Uranium Dioxide at Temperatures Below 270°C"

Leningrad, Radiokhimiya, Vol 13, No 6, 1971, pp 852-857

Abstract: The starting material was obtained by reduction of mixed oxides $\alpha UO_3 \cdot H_2O$ at 800-900°; the reduced product had the composition $UO_{2.01-2.03}$. Phase composition and chemical analysis of the products obtained from air oxidation in temperature range 100-270°C were carried out. Oxidation of UO_2 in the range 100-150°C leads to the formation of tetragonal phase β-U_3O_7 with a c/a ratio of 1.01-1.02. Further oxidation in the range 180-250° leads to the formation of γ-U_3O_7, the the c/a ratio increasing to 1.027-1.032. At 270° UO_2 oxidizes to $UO_{2.473}$ in about three hours. Concurrently with γ-U_3O_7 there forms a rhombic phase $U_8O_{21\pm x}$ in which c/a = 1.697. Continuation of the oxidation of the oxidation at this temperature yields $UO_{2.703}$ with traces of γ-U_3O_7. The overall oxidation route of UO_2 may be represented as follows: UO_2

1/2

APPROVED FOR RELEASE: 08/09/2001 CIA-RDP86-00513R002201520016-2"

"APPROVED FOR RELEASE: 08/09/2001 CIA-RDP86-00513R002201520016-2

USSR

KUZ'MICHEVA, YE. U., et al., Radiokhimiya, Vol 13, No 6, 1971, pp 852-857

$$\xrightarrow{100-150} \beta\text{-}U_3O_7 \; (c/a=1.01) \xrightarrow{180-250} \gamma\text{-}U_3O_7 \; (c/a=1.027) \xrightarrow{260} U_8O_{21+x} \; (c/a=1.697)$$

$$\xrightarrow{>270} U_3O_{8+x}. \; (c/a=1.689)$$

Experimental data failed to show formation of U_4O_9, α-U_3O_7 or δ-U_3O_7. The data support a two-stage diagram of the oxidation process of uranium oxide.

2/2

APPROVED FOR RELEASE: 08/09/2001 CIA-RDP86-00513R002201520016-2"

"APPROVED FOR RELEASE: 08/09/2001 CIA-RDP86-00513R002201520016-2

USSR UDC 546.791

TSVIGUNOV, A. N., KOVBA, L. M., SAVRANSKIY, V. V., and ZUBOVA, YE. V.,

"Study of the High Pressure Phase of α-U_2O_5"

Leningrad, Radiokhimiya, Vol 13, No 5, 1971, p 790

Abstract: Monocrystalline α-U_2O_5 was synthesized at high pressure and temperature. Using the method of Laue it was shown that these crystals belong to monoclinic syngony with basocentric nucleus. Systematic extinctions correspond to two Fedorov groups: C_{2h}^{6} and C_{s}^{4}. The parameters of elementary nucleus were determined to be: a = 12.40 ± 0.01 Å, b = 5.074 ± 0.005 Å, c = 5.675 ± 0.005 Å, and β = 99°12' ± 6'. Assuming four units of U_2O_5 to comprise an elementary nucleus, the density was calculated to be 10.41 g/cm^3, agreeing well with the experimentally determined ρ = 10.50 g/cm^3.

1/1

APPROVED FOR RELEASE: 08/09/2001 CIA-RDP86-00513R002201520016-2"

"APPROVED FOR RELEASE: 08/09/2001 CIA-RDP86-00513R002201520016-2

USSR

UDC 546.791

KOVBA, L. M., and TSVIGUNOV, A. N.

"The Type of Superstructure in Phase $UO_{2.6}$"

Leningrad, Radiokhimiya, Vol 13, No 5, 1971, pp 789-790

Abstract: The investigation of the monocrystals of mixed uranium oxides with the O/U ratio of 2.615 was repeated. The crystals obtained were studied by the Laue methods. It was determined that the b subnucleus period increased by 13 times, and the c subnucleus period -- by 2 times. 52 uranium atoms comprise the nucleus, and the stoichiometric composition of the oxide should be formulated as $U_{13}O_{34}$ ($UO_{2.615}$). Possible Fedorov groups are: D_{2h}^{17}, C_{2v}^{12}, C_{2v}^{16}, Z=4.

1/1

APPROVED FOR RELEASE: 08/09/2001 CIA-RDP86-00513R002201520016-2"

"APPROVED FOR RELEASE: 08/09/2001 CIA-RDP86-00513R002201520016-2

USSR

UDC 546.791

TSVIGUNOV, A. N., and KOVBA, L. M.

"Existence of the p-U_3O_8 Phase"

Leningrad, Radiokhimiya, Vol 12, No 5, 1970, p 795

Abstract: The work of Steeb and Brucklacher was repeated and it was found that p-U_3O_8 represents a mixture of two phases: α-U_3O_8 (basic) and β-U_3O_8 (admixture). Appearance of the β-U_3O_8, which at atmospheric pressure has about a 0.5% larger volume than the starting material is due most probably to greater compressibility of β-U_3O_8. The conversions of α-U_3O_8 were studied in pressure range from 2000-8200 bar. The α-U_3O_8 samples held under pressure showed some additional lines which could be explained by doubling the C period. It is claimed that p-U_3O_8 analogously to δ-U_3O_8 is not an independent modification of uranium oxide.

1/1

APPROVED FOR RELEASE: 08/09/2001 CIA-RDP86-00513R002201520016-2"

"APPROVED FOR RELEASE: 08/09/2001 CIA-RDP86-00513R002201520016-2

UDC 546.791.666

K

USSR

KOVBA, L. M., POLUNINA, G. P. and KHROMOVA, M. M.

"Toward the Study of Dual Oxides of Erbium and Uranium"

Leningrad, Radiokhimiya, Vol XI, No. 5, pp 601 - 603

Abstract: Data are insufficient on the variation of the degree of oxidation of uranium during interaction of its lower and higher oxides with Er_2O_3, since various studies have revealed the presence of compounds of type R_6UO_{12}, among others, within R_2O_3-UO_2-O_2 systems. The present study was undertaken to elucidate the phase relationships of the U_3O_8-Er_2O_3-O_2 system.

1/2

APPROVED FOR RELEASE: 08/09/2001 CIA-RDP86-00513R002201520016-2"

"APPROVED FOR RELEASE: 08/09/2001 CIA-RDP86-00513R002201520016-2

USSR

KOVBA, L. N., et al., Leningrad, Radiokhimiya, Vol III, No 5, pp 601-603

Ammonium uranate and erbium hydroxide were precipitated jointly from nitric acid solution, and after heating the degree of oxidation of the uranium was determined vanadatometrically and culonometrically. Roentgen-phase analysis was made.

Complete data from the phase and chemical analyses are included in the paper.

2/2

APPROVED FOR RELEASE: 08/09/2001 CIA-RDP86-00513R002201520016-2"

"APPROVED FOR RELEASE: 08/09/2001 CIA-RDP86-00513R002201520016-2

USSR

UDC 546.791'631

VERBETSKIY, V. N., KOVBA, L. M.

"Reactions of ZrO_2 with U_3O_8"

Moscow, Zhurnal Neorganicheskoy Khimii, Vol 15, No 7, 1970, pp 1728-1730

Abstract: Through X-ray phase analysis it was established that solid solutions of $ZrO_2 \cdot nU_3O_8$ are formed in the system ZrO_2 - U_3O_8, and their parameters were determined. The phase $ZrO_2 \cdot nU_3O_8$ has a marked region of homogeneity, and when it is oxidized with oxygen under pressure, a hexagonal phase $(Zr, U)O_X$, a rhombic phase $(Zr,U)O_X$, and alpha-UO_{3-X} are formed. The degree of oxidation of uranium is O/U = 2.90-1.91. Pure uranium monoxide-dioxide under these same conditions is oxidized to gamma-UO_3. Lattice parameters of the new phases were determined. For the hexagonal phase $(Zr,U)O_X$, a = 4 X 3.958 and c = 4 X 4.157 Å. In the remaining cases, parameters of the subcells were determined.

1/1

APPROVED FOR RELEASE: 08/09/2001 CIA-RDP86-00513R002201520016-2"

"APPROVED FOR RELEASE: 08/09/2001 CIA-RDP86-00513R002201520016-2

USSR UDC 546.791

TSVIGUNOV, A. N., KOVBA, L. M., Department of Inorganic Chemistry, Moscow State University imeni M. V. Lomonosov, Moscow, Ministry of Higher and Secondary Specialized Education RSFSR

"The Nature of δ-U_3O_8"

Moscow, Vestnik Moskovskogo Universitet, Seriya II, Khimiya, Vol 11, No 1, Jan/Feb 70, pp 59-61

Abstract: Protracted heating of α-U_3O_8 in air at 1350°C followed by slow cooling produces a powder and single crystals of the phase termed δ-U_3O_8 having a rhombic lattice with parameters a = 6.70 Å, b = 4.14 Å and c = 8.93 Å. An analysis of previously published data indicates that δ-U_3O_8 is not a new modification of U_3O_8 but is rather a mixture of the β-modification (basic phase) and the α-phase (small amounts). The lattice parameters for β-U_3O_8 are a = 7.067, b = 11.44 and c = 8.29 Å. The respective parameters for the α-modification are a = 6.705, b = 11.93 and c = 4.144 Å.

1/1

APPROVED FOR RELEASE: 08/09/2001 CIA-RDP86-00513R002201520016-2"

"APPROVED FOR RELEASE: 08/09/2001 CIA-RDP86-00513R002201520016-2

1/2 008 UNCLASSIFIED PROCESSING DATE--23OCT70

TITLE--NATURE OF DELTA TRIURANIUM OCTOXIDE -U-

AUTHOR-(02)-TSYIGUNOV, A.N., KOVBA, L.M.

K

COUNTRY OF INFO--USSR

SOURCE--VESTN. MOSK, UNOV., KHIM. 1970, 11(1), 59-61

DATE PUBLISHED-------70

SUBJECT AREAS--CHEMISTRY

TOPIC TAGS--URANIUM OXIDE, METAL OXIDE

CONTROL MARKING--NO RESTRICTIONS

DOCUMENT CLASS--UNCLASSIFIED

PROXY REEL/FRAME--1997/1471 STEP NO--UR/0189/70/011/001/0059/0061

CIRC ACCESSION NO--AP0120258

UNCLASSIFIED

APPROVED FOR RELEASE: 08/09/2001 CIA-RDP86-00513R002201520016-2"

"APPROVED FOR RELEASE: 08/09/2001 CIA-RDP86-00513R002201520016-2

2/2 008 UNCLASSIFIED PROCESSING DATE--23OCT70

CIRC ACCESSION NO--AP0120258

ABSTRACT/EXTRACT--(U) GP-0- ABSTRACT. THE ANAL. OF PREVIOUSLY PUBLISHED DATA ON DELTA U SUB3 O SUB8 AND BETA U SUB3 O SUB8 PHASES SHOWS THAT DELGA U SUB3 O SUB8 IS NOT A NEW MODIFICATION OF U OXIDE (U SUB3 O SUB8), BUT IS A MIXT. OF PHASES OF ALPHA U SUB3 O SUB8 IN INSIGNIFICANT AMTS. AND BETA U SUB3 O SUB8 AS THE BASIC PHASE.

APPROVED FOR RELEASE: 08/09/2001 CIA-RDP86-00513R002201520016-2"

"APPROVED FOR RELEASE: 08/09/2001 CIA-RDP86-00513R002201520016-2

USSR UDC 621.372.54.061

KOVBASA, A. P., SHELAMOV, G. N.

"Application of Circuit Theory to the Design of Microwave Devices With Ferrites and Dielectrics"

Avtomatiz. proyektir. v elektron. Resp. mezhved. nauch.-tekhn. sb. (Design Automation in Electronics. Republic Interdepartmental Scientific and Technical Collection), vyp. 2, Kiev, "Tekhnika", 1970, pp 132-142

Abstract: Equivalent circuits are set up and the parameters of ferrites and dielectrics are calculated. In analyzing the equivalent circuits of microwave two-terminal pair networks with ferrites and dielectrics, expressions are derived for the coefficients of reflection, transmission and absorption of these two-terminal pairs. Four tables, four illustrations, bibliography of five titles.

1/1

APPROVED FOR RELEASE: 08/09/2001 CIA-RDP86-00513R002201520016-2"

"APPROVED FOR RELEASE: 08/09/2001 CIA-RDP86-00513R002201520016-2

USSR UDC: 51

ZHALDAK, M. I., KOVBASENKO, B. S.

"Cumulative Iteration Process for Solving a Problem of Linear Programming With Continuously Assigned Constraints"

Vychisl. i prikl. mat. Mezhved. nauch. sb. (Computational and Applied Mathematics. Interdepartmental Scientific Collection), 1972, vyp. 16, pp 75-84 (from RZh-Kibernetika, No 6, Jun 72, Abstract No 6V397)

Translation: A certain iteration process patterned after the method of possible directions is presented for solving the problem of linear programming with continuous constraints. The algorithm allows one to obtain an estimate of approximation on each step of the iteration process. Authors' abstract.

1/1

APPROVED FOR RELEASE: 08/09/2001 CIA-RDP86-00513R002201520016-2"

"APPROVED FOR RELEASE: 08/09/2001 CIA-RDP86-00513R002201520016-2

USSR UDC 512.25/.26+519.3:330.115

ZHALDAK, M. I., KOVBASENKO, B. S.

"Accumulating Iterational Process of Solution of Convex Programming Problem"

Vychisl. i Prikl. Mat. Mezhved. Nauch. sb. [Computational and Applied Mathematics Interdepartmental Scientific Collection], No 13, 1971, pp 84-88, (Translated from Referativnyy Zhurnal, Kibernetika, No 10, 1971, Abstract No 10 V685 by the author's).

Translation: A certain iterational process similar to the method of possible directions is presented for the solution of a problem in convex programming. Upper and lower estimates of approximation can be produced at each step. The convergence of the process is proven.

1/1

APPROVED FOR RELEASE: 08/09/2001 CIA-RDP86-00513R002201520016-2"

"APPROVED FOR RELEASE: 08/09/2001 CIA-RDP86-00513R002201520016-2

USSR UDC 621.791.72:669.15-194

KASATKIN, B. S., Doctor of Technical Sciences, ~~KOVBASENKO, S. N.,~~ Engineer, NAZARENKO, O. K., Candidate of Technical Sciences, ZADERIY, B. A., Engineer, and ZHIVAGA, L. I., Engineer, Electric Welding Institute imeni Ye. O. Paton of the Academy of Sciences UkrSSR

"Electron-Beam Welding of Low-Alloy 14Kh2GMR Steel"

Kiev, Avtomaticheskaya Svarka, No 7(244), Jul 73, pp 4-8

Abstract: A study was made of the characteristics of electron--beam welding of high-strength low-alloy 14Kh2GMR steel plates, 100 x 100 x8mm, at various heating conditions. High welding rates and small heating and cooling times result in size reduction of the metal structure in the thermal influence zone; this has a favorable effect on the strength and the impact ductility of the welded joint. At relatively high cooling rates, the joints do not show a tendency to the development of cold cracks. The mechanical properties of electron-beam welded joints are equal in quality to the initial material. The wide potentialities in varying the heat conditions in electron-beam welding make this

1/2

APPROVED FOR RELEASE: 08/09/2001 CIA-RDP86-00513R002201520016-2"

"APPROVED FOR RELEASE: 08/09/2001 CIA-RDP86-00513R002201520016-2

USSR

KASATKIN, B. S., et al., Avtomaticheskaya Svarka, No 7 (244), Jul 73, pp 4-8

welding method promising for industrial use in producing metal constructions from high-strength bainite steels. Recommendations are given for selecting optimum welding conditions for heat-treated low-alloy steels. Five figures, one table, seven bibliographic references.

2/2

APPROVED FOR RELEASE: 08/09/2001 CIA-RDP86-00513R002201520016-2"

"APPROVED FOR RELEASE: 08/09/2001 CIA-RDP86-00513R002201520016-2

Acc. Nr. AP0039670 Abstracting Service: CHEMICAL ABST. 4-70 K Ref. Code 2412 0096

68942a Effect of errors during the determination of carbon on the accuracy of calculations of mechanically incomplete mazut combustion. Koybasnyk, A. S.; Gelier, Z. I.; Ashikhmina, N. M. (Odess. Tekhnol. Inst. Pishch. Kholod. Prom., Odessa, USSR). *Teploenergetika* 1970, 17(1), 76-8 (Russ). The errors assocd. with the title method (Vnukov, Goikhman, Madoyan, and Migalin, 1966) are evaluated. The method consists of trapping the foots and detn. of their C content by combustion to CO_2 at 700°. The CO_2 is absorbed by an excess of a soln. of $Ba(OH)_2$, which is then back titrated by HCl. A detailed anal. of errors was carried out. M. Shelef

1/1

11

REEL/FRAME
19740948

APPROVED FOR RELEASE: 08/09/2001 CIA-RDP86-00513R002201520016-2"

"APPROVED FOR RELEASE: 08/09/2001 CIA-RDP86-00513R002201520016-2

1/2 035 UNCLASSIFIED PROCESSING DATE--13NOV70

TITLE--DETERMINATION OF CROSS SECTIONS OF PHOTON CAPTURE BY SURFACE ELECTRON STATES -U-

AUTHOR-(02)-LITOVCHENKO, V.G., KOVBASYUK, V.P.

COUNTRY OF INFO--USSR

SOURCE--FIZ. TEKH. POLUPROV. 1970, 4(5), 975-8

DATE PUBLISHED--------70

SUBJECT AREAS--PHYSICS

TOPIC TAGS--FREQUENCY CHARACTERISTIC, IR PHOTOCONDUCTOR, SILICON, RELAXATION PROCESS, IR ABSORPTION SPECTRUM, CRYSTAL VACANCY, CAPTURE CROSS SECTION

CONTROL MARKING--NO RESTRICTIONS

DOCUMENT CLASS--UNCLASSIFIED

PROXY REEL/FRAME--3004/0885 STEP NO--UR/0449/70/004/005/0975/0978

CIRC ACCESSION NO--AP0131472

UNCLASSIFIED

APPROVED FOR RELEASE: 08/09/2001 CIA-RDP86-00513R002201520016-2"

"APPROVED FOR RELEASE: 08/09/2001 CIA-RDP86-00513R002201520016-2

2/2 035 UNCLASSIFIED PROCESSING DATE--13NOV70

CIRC ACCESSION NO--AP0131472

ABSTRACT/EXTRACT--(U) GP-0- ABSTRACT. THE WAVELENGTH (LAMBDA) DEPENDENCE OF THE RELAXATION TIME, TAU SUBIR, OF THE IR SURFACE PHOTOCOND. (PC) WAS DETD. IN SI BY MEASURING THE PC DECAY AND (OR) THE FREQUENCY (OMEGA) DEPENDENCE OF THE PC. TAU SUBIR DECREASED WITH INCREASING LAMBDA AND EXHIBITED 2 REGIONS IN THE OMEGA DEPENDENCE OF THE PC: ONE AT LOW OMEGA (10-20 HZ), THE OTHER AT HIGH OMEGA (2 TIMES 10 PRIME2-10 PRIME3 HZ). THE 2 REGIONS CORRESPOND TO STEPS IN THE PC SPECTRUM, INDICATING A LEVEL CHANGE WITH INCREASING LAMBDA. THE PHOTON CAPTURE CROSS SECTION, ALPHA SUBPHI WAS CALCD. FROM ALPHA SUBPHI EQUALS DELTA RHO SUBIR OVER TAU SUBIR RHO SUBT PRIMED L SUBIR, WHERE DELTA RHO SUBIR IS THE CHANGE IN THE CARRIER CONCN. IN THE SPACE CHARGE REGION OF THE VALENCE BAND, RHO SUBT PRIMED IS THE NO. OF VACANCIES ON THE LEVEL, AND L SUBIR IS THE NO. OF INCIDENT PHOTONS. THE VALUES FOR THE SLOW AND FAST REGIONS ARE ALPHA SUBPHI PRIME 3 SIMILAR TO 10 NEGATIVE PRIME15 CM PRIME2 AND ALPHA SUBPHI PRIMEF SIMILAR TO 10 NEGATIVEPRIME16-10 NEGATIVE PRIME17 CM PRIME2, RESP. FACILITY: INST. POLUPROV., KIEV, USSR.

UNCLASSIFIED

APPROVED FOR RELEASE: 08/09/2001 CIA-RDP86-00513R002201520016-2"

"APPROVED FOR RELEASE: 08/09/2001 CIA-RDP86-00513R002201520016-2

USSR UDC 620.171.3

PANASYUK, V. V., SHNITSER, K. M., and KOVCHIK, S. YE., Physicomechanical Institute, Academy of Sciences Ukrainian SSR, Lvov

"Effect of Prestressing in Air and Water on the Cracking Resistance of Titanium Alloy VT-14"

Kiev, Fiziko-Khimicheskaya Mekhanika Materialov, Vol 9, No 6, 1973, pp 10-13

Abstract: Results are presented from a study of the effect of static prestressing of VT-14 titanium alloy in air and tap water on its resistance to crack development. Results of the experiments for samples of the alloy prestressed to 0.8 and 0.4 of their breaking stress and without prestressing revealed that the resistance of VT-14 to crack propagation (in air at room temperature) depends on the prestress load P_1 and the time under load. When samples were prestressed for up to 10 hours their resistance to crack propagation was sharply lowered, while from 10 to 100 hours there was an increase in cracking resistance and at 100 hours the value of cracking resistance K_{1s} exceeded the initial magnitude of K_{1s} drops drastically during the first few

1/2

APPROVED FOR RELEASE: 08/09/2001 CIA-RDP86-00513R002201520016-2"

"APPROVED FOR RELEASE: 08/09/2001 CIA-RDP86-00513R002201520016-2

USSR

PANASYUK, V. V., et al., Fiziko- Khimicheskaya Mekhanika Materialov, Vol 9, No 6, 1973, pp 10-13

few hours under load for samples prestressed to 0.8 and 0.4. Then there is a rise in K_{1s} where maximums are reached around 100 hours, with the value of K_{1s} higher for the samples prestressed to 0.8 of their breaking load than for the 0.4 P_i. From 100 to 500 hours the samples at 0.8 P_i maintain a constant K_{1s} while for the samples at 0.4 P_i the value of K_{1s} drops off gradually. The same relationships held true for samples prestressed and then held under various loads in water. Three figures, four bibliographic references.

2/2

APPROVED FOR RELEASE: 08/09/2001 CIA-RDP86-00513R002201520016-2"

"APPROVED FOR RELEASE: 08/09/2001 CIA-RDP86-00513R002201520016-2

USSR

UDC 669. 018.25.539.56

PANASYUK, V. V., SHNITSER, K. M., and KOVCHIK, S. YE., Physical-Technical Institute, Academy of Sciences Ukrainian SSR, L'vov

"Determination of the resistance of VT-14 Titanium Alloy to Brittle Fracture"

L'vov Fiziko-Khimicheskaya Mekhanika Materialov, No 3, 1973, pp 64-69

Abstract: The resistance of VT-14 titanium alloy to brittle fracture was studied by two schemes of loading with consideration of the effect of the medium and direction of crack development relative to the direction of rolling. The alloy studied has the following chemical composition (in %): 3.5-4.5 Al, 2.8-3.8 Mo, and 0.7-1.5 V. Two methods of loading samples are proposed: cantilever bend of a beam, and tension of a square plate, both of which are applicable to the methods of applying brittle cracks -- fatigue and impact. Four figures, one table, seven bibliographic references.

1/1

APPROVED FOR RELEASE: 08/09/2001 CIA-RDP86-00513R002201520016-2"

"APPROVED FOR RELEASE: 08/09/2001 CIA-RDP86-00513R002201520016-2

USSR UDC 389.0:531.768

SMIRNOV, G. A., ANDRUSHCHUK, V. V., KOVCHIN, S. A.

"A Precision Installation for the Reproduction of Constant Acceleration"

Moscow, Izmeritel'naya Tekhnika, No 12, Dec 70, pp 31-32

Abstract: In the article are presented the basic data concerning the design of the PTs-3 precision centrifuge, latest of a series developed by the Leningrad Polytechnical Institute imeni M. I. Kalin'in, in the range of 0.01-160 g with a limit relative error of 0.01%. A description is given of the design features of the mechanical part, the electric-drive system, and the precision mercury current collector used for picking up electrical signals from the tested instruments. 1 figure, 3 bibliographic entries.

1/1

APPROVED FOR RELEASE: 08/09/2001 CIA-RDP86-00513R002201520016-2"

"APPROVED FOR RELEASE: 08/09/2001 CIA-RDP86-00513R002201520016-2

USSR UDC 621.762.001

ABARBANEL'. Z. I., and KOVCHUR, S. G.

"Photometric Method for the Determination of the Specific Surface of Powders"

Tr. Vitebsk. tekhnol. in-ta legk. prom-sti [Works of the Vitebsk Technological Institute for Light Industry], 1, 1970, pp. 82-85, (Translated from Referativnyy Zhurnal-Metallurgiya, No. 1, 1971, Abstract No.1 G426 by I. Brokhin).

Translation: A method is developed for turbidimetric determination of the specific surface of polydispersed powders, based on the scattering of light passing through a homogeneously distributed powder material. The homogeneous state must be retained throughout the time of the measurement. This is achieved either by continuous intensive mixing of the system or by using a viscous liquid (such as glycerine) to eliminate sedimentation of particles. Equations are presented characterizing the attenuation of a parallel light beam passing through a turbid polydispersed medium and the transmission factor, which is measured by known photometric methods. The final equation for the specific surface σ is $\sigma = k/\gamma \ln I_0/I$, where k is an instrument

APPROVED FOR RELEASE: 08/09/2001 CIA-RDP86-00513R002201520016-2"

"APPROVED FOR RELEASE: 08/09/2001 CIA-RDP86-00513R002201520016-2

USSR UDC 621.762.001

ABARBANEL', A. I., and KOVCHUR, S. G., Tr. Vitebsk. tekhnol. in-ta le.k. prom-sti (from Referativnyy Zhurnal-Metallurgiya, No 1, 1970, Abstract No 1 G426 by I. Brokhin).

constant determined using standard materials with known specific surface. Radiation with the shortest possible wavelength should be used. Photoelectric determination significantly reduces analysis time.

APPROVED FOR RELEASE: 08/09/2001 CIA-RDP86-00513R002201520016-2"

"APPROVED FOR RELEASE: 08/09/2001 CIA-RDP86-00513R002201520016-2

Epidemiology

USSR UDC 616.921.5-07

OBREKHT, S. D., KOVDYSHEV, B. V., PINSKIY, Z. A., and KARAULOV, V. S.

"Clinical and Epidemiological Characteristics of Influenza During the 1972-1973 Epidemic"

Moscow, Voyenno-Meditsinskiy Zhurnal, No 11, 1973, pp 44-46

Abstract: Late in December 1972 an influenza A_2 epidemic broke out among soldiers in coastal units and garrisons who had come from such large cities as Leningrad where an influenza epidemic among the civilian population had already reached substantial proportions. The sick rate peaked during the first 10 days of January and then declined sharply. Most of the personnel were not vaccinated until shortly before the outbreak because the incidence of influenza and other acute respiratory diseases remained low as late as November. The sick rate was highest among the young draftees. In general, the course was mild or moderately severe but complicated by pneumonia (much more frequently than in epidemics of previous years) in about 20% of the cases. The average number of bed-days in uncomplicated cases was 7.5. Treatment with antigrippine proved to be efficacious and the pneumonias yielded quickly to antibiotics. The authors conclude that such prophylactic

APPROVED FOR RELEASE: 08/09/2001 CIA-RDP86-00513R002201520016-2"

"APPROVED FOR RELEASE: 08/09/2001 CIA-RDP86-00513R002201520016-2

USSR

OBREKHT, S. D., et al., Voyenno-Meditsinskiy Zhurnal, No 11, 1973, pp 44-46

measures as anti-influenza serum, sulfanilamides, and oxolin ointment are much less useful than vaccinations if given well in advance of a predicted epidemic.

2/2

APPROVED FOR RELEASE: 08/09/2001 CIA-RDP86-00513R002201520016-2"

"APPROVED FOR RELEASE: 08/09/2001 CIA-RDP86-00513R002201520016-2

1/2 012 UNCLASSIFIED PROCESSING DATE--02OCT70

TITLE--PREPARATION OF CHROMIUM (III) COMPOUNDS BASED ON THE INTERACTION OF SODIUM CHROMATE SOLUTIONS WITH SULFUR DIOXIDE -U-

AUTHOR-(03)-KOVEL, M.S., BOROVSKIKH, L.A., VILNYANSKIY, YA.YE.

COUNTRY OF INFO--USSR

SOURCE--ZH. PRIKL. KHIM. (LENINGARD) 1970, 43(2), 236-40

DATE PUBLISHED--------70

SUBJECT AREAS--CHEMISTRY

TOPIC TAGS--CHEMICAL PRODUCTION, CHEMICAL REDUCTION, CHROMIUM COMPOUND, HYDROXIDE, SULFUR DIXOIDE, SODIUM CHROMATE

CONTROL MARKING--NO RESTRICTIONS

DOCUMENT CLASS--UNCLASSIFIED

PROXY REEL/FRAME--1989/1927 STEP NO--UR/0080/70/043/002/0236/0240

CIRC ACCESSION NO--AP0108256

UNCLASSIFIED

APPROVED FOR RELEASE: 08/09/2001 CIA-RDP86-00513R002201520016-2"

"APPROVED FOR RELEASE: 08/09/2001 CIA-RDP86-00513R002201520016-2

2/2 012 UNCLASSIFIED PROCESSING DATE--02OCT70

CIRC ACCESSION NO--AP0108256

ABSTRACT/EXTRACT--(U) GP-0- ABSTRACT. THE INFLUENCE OF A SERIES OF FACTORS ON THE COMPN. AND STRUCTURE OF PPTS. OF HYDROXIDE COMPDS. OF CR (CR CHROMATES AND HYDROXIDES), WHICH FORM UPON THE REDN. OF CHROMATE SOLNS. BY SO SUB2 GAS, IS STUDIED. THE POSSIBILITY OF AN EFFECTIVE USE OF THE GIVEN METHOD FOR THE RECOVERY OF CHROMATE SOLNS. IN VARIOUS CHEM. PRODUCTS SUCH AS TANNING AGENTS, ELECTROLYTES, CHROMIC OXIDE, ETC. IS SHOWN.

UNCLASSIFIED

APPROVED FOR RELEASE: 08/09/2001 CIA-RDP86-00513R002201520016-2"

"APPROVED FOR RELEASE: 08/09/2001 CIA-RDP86-00513R002201520016-2

USSR UDC: 539.192

SAMSONOV, G. V., GORYACHEV, Yu. M., KOVENSKAYA, B. A., and TEL'NIKOV, Ye. Ya.

"Electron Spectrum and Physical Characteristics of Titanium, Vanadium, and Chromium Diborides"

Tomsk, Izvestiya VUZ--Fizika, No 6, 1972, pp 37-42

Abstract: An account is given of the theoretical computations of the electronic spectra for titanium, vanadium, and chromium diborides by the KOLKAO /expansion unknown/ method, otherwise known as the strong bonding method, which makes it possible to obtain a redistribution of the electrons from the shells of isolated atoms to the orbitals of solid compounds. The purpose of the computation is to obtain information regarding the relative contribution of the electronic states of the metal and the boron to the bonding energy and the physical characteristics of the boride and the redistribution of the electrons for a change in the number of the metal's d-electrons. It is noted that the results of the computations explain the basic laws for the formation of the physico-chemical characteristics of this type of compound. The authors are connected with the Institute of Materials Science Problems, Ukrainian Academy of Sciences.

1/1

APPROVED FOR RELEASE: 08/09/2001 CIA-RDP86-00513R002201520016-2"

"APPROVED FOR RELEASE: 08/09/2001 CIA-RDP86-00513R002201520016-2

1/2 025 UNCLASSIFIED PROCESSING DATE--09OCT70

TITLE--ELECTRICAL PROPERTIES OF COMPOUNDS OF LANTHANUM HEXABORIDE WITH TRANSITION METALS -U-

AUTHOR-(03)-BONDARENKO, V.P., KOVENSKAYA, N.A., MOROZOV, V.V.

COUNTRY OF INFO--USSR

SOURCE--IZV. VYSSH. UCHEB. ZAVED., FIZ. 1970, 13(2), 12-15

DATE PUBLISHED--------70

SUBJECT AREAS--MATERIALS, CHEMISTRY

TOPIC TAGS--ELECTRICAL PROPERTY, LANTHANUM COMPOUND, BORIDE, ELECTROMOTIVE FORCE, HALL EFFECT, TUNGSTEN ALLOY, TANTALUM, RHENIUM, HAFNIUM

CONTROL MARKING--NO RESTRICTIONS

DOCUMENT CLASS--UNCLASSIFIED

PROXY REEL/FRAME--1993/1914 STEP NO--UR/0139/70/013/002/0012/0015

CIRC ACCESSION NO--AT0114354

UNCLASSIFIED

APPROVED FOR RELEASE: 08/09/2001 CIA-RDP86-00513R002201520016-2"

"APPROVED FOR RELEASE: 08/09/2001 CIA-RDP86-00513R002201520016-2

2/2 025 UNCLASSIFIED PROCESSING DATE--09OCT70

CIRC ACCESSION NO--AT0114354

ABSTRACT/EXTRACT--(U) GP-0- ABSTRACT. THE RESISTANCE, THERMAL EMF., AND THE HALL EFFECT WERE STUDIED FOR LAB SUB6 WITH W, TA, RE, AND HF. THE ALLOYS WITH 0.5 AT. PERCENT OF THE ADDN. ARE SINGLE PHASE. THOSE CONTG. 1, 5, 10, AND 15 AT. PERCENT OF THE ADDN. ARE 2 PHASE MIXTS. OF A SOLID SOLN. BASED ON LAB SUB6 AND THE BORIDE OF THE METAL. FOR ALL OF THE SYSTEMS THE ADDN. OF 0.5 AT. PERCENT OF THE METAL DECREASES THE SP. RESISTANCE. THE MAX. DECREASE (SIMILAR TO 45PERCENT) WAS OBSERVED WITH HF AND W. INCREASING THE AMT. OF METAL TO 1 AT. PERCENT INCREASES THE RESISTANCE. THE RESISTANCE REMAINS CONST. FOR FURTHER INCREASES IN THE ADDN. CALCNS. BASED ON THE HALL EFFECT SHOW THAT THE INTRODUCTION OF THE METALS RESULT IN SOME DECREASE IN THE CARRIER CONCN. AND THEREFORE THE DECREASE IN THE RESISTANCE IS ATTRIBUTED TO AN INCREASE IN THE MOBILITY OF THE CURRENT CARRIERS. FACILITY: KIEV. POLITEKH. INST., KIEV, USSR.

UNCLASSIFIED

APPROVED FOR RELEASE: 08/09/2001 CIA-RDP86-00513R002201520016-2"