"APPROVED FOR RELEASE: 08/09/2001 CIA-RDP86-00513R002201520018-0

USSR UDC 661.143(088.8)

SABITSKAYA, R. A., GORODINA, Z. F., ZYTNER, G. G., KOROVICHEVA, V. R., MAR-KOVSKIY, L. YA.

"Procedure for Obtaining a Luminescent Compound"

USSR Author's Certificate No 312864, filed 18 Aug 69, published 2 Dec 71 (from RZh-Khimiya, No 12, Jun 72, Abstract No 12L187P)

Translation: In order to reduce the cost and to obtain luminescent compounds which are efficient with respect to brightness of their luminescence, a group III metal orthovanadate and orthophosphate are used in combination with mixed group II metal orthovanadate and orthophosphate. Various rare-earth elements or a mixture of a rare-earth element and Bi is used as the activator. The activator and Bi are taken in the amount of 0.01-0.2 g/atom per mole of final product. The luminous compound obtained by the proposed procedure corresponds, for example, to the formula: $Me_{(3-1.5x)}^{2+}Me_x^{3+}(P_{1-y}K_yO_4)_2 \cdot zA$ where Me^{2+} are Ca^{2+} or Sr^{2+} ions with partial replacement by Zn^{2+} or Mg^{2+} ions; the Me^{3+} are Y^{3+} or La^{3+} or Al^{3+} ions; K is a group V element of the periodic system, for example, V; A are the activator ions Sn^{2+} or Eu^{3+} or Sm^{3+} or combined with a sensitizer, for example, Bi; $0.05 \leq x \leq 0.5$; $0 \leq y \leq 0.5$; $0.01 \leq z \leq 0.2$. In order to obtain the compound, the charge components are

1/2

APPROVED FOR RELEASE: 08/09/2001 CIA-RDP86-00513R002201520018-0"

"APPROVED FOR RELEASE: 08/09/2001 CIA-RDP86-00513R002201520018-0

USSR

BABITSKAYA, R. A., et al., USSR Author's Certificate No 311864, filed 16 Aug 69, published 2 Dec 71

mixed in advance and baked in the air or (in the case of using Sn^{2+}) in the presence of a reducing agent at a temperature of 600-1,200° for 2-4 hours. The luminescent compounds obtained are excited by a broad range of UV radiation.

2/2

APPROVED FOR RELEASE: 08/09/2001 CIA-RDP86-00513R002201520018-0"

"APPROVED FOR RELEASE: 08/09/2001 CIA-RDP86-00513R002201520018-0

USSR UDC 621.771.8

POLYKHIN, P. I., BERKOVSKIY, V. S., ZHADAN, V. T., FEDOSOV, B. M., STETSENKO, N. V., OSADCHIY, N. A., AVIJNIN, P. M., and KOVTANYUK, Yu. P.

"Developing New Technology for Rolling the PSh-20 Section from Kh18N10T Steel on the 550 Mill"

Moscow, Plasticheskaya Deformatsiya Metallov i Splavov, "Metallurgiya" Publishing House, No. 64, 1970, pp 106-113

Translation: A brief description is given of the technology for rolling the shaped sections being studied. An analysis is made of the existing rolled pass design and deformation parameters by templets, and data are given from an investigation of the power parameters of rolling. On the basis of an analysis of the data received and the technical-economic indicators, a new technology for the process of rolling the sections under study is developed. Eleven illustrations and one table.

1/1

APPROVED FOR RELEASE: 08/09/2001 CIA-RDP86-00513R002201520018-0"

"APPROVED FOR RELEASE: 08/09/2001 CIA-RDP86-00513R002201520018-0

(2)

CARON

JPRS 59636

27 July 1973

IMAGE CONVERTERS/SEMICONDUCTORS

UDC 621.383.5

IMAGE CONVERTER BASED ON MULTI-LAYER SEMICONDUCTOR-DIELECTRIC STRUCTURES

[illegible] Minsk, Zhurnal Prikladnoy Spektroskopii, Russian, vol 18, no 1, January 1973, submitted 6 December [illegible], pp 127-132]

Experimental investigations of image storing and reading systems on metal-dielectric-semiconductor-dielectric-metal structures (MDSDM) described in works [1-6]. When an image impinges on a structure, the relief of the electric field, corresponding to the different intensity of illumination of the individual crystal points, is formed in the bulk of a photoconductive semiconductor. The relief of the electric field is also created in the layers of the dielectric, but of opposite sign to the relief of the field in the semiconductor. In the section, where the minimum value of the field exists in the semiconductor, the maximum value of the field exists in the dielectric, and vice versa.

Reproduction of the recorded pattern is accomplished either by reading the photoconductivity signal by scanning with a light beam, or by reading the variation in the electrooptical properties of the semiconductor [illegible] electric field. In this case, the possibility exists for simultaneous reproduction of the whole image.

The arrangements, in which the reproduction of the recorded image is implemented by recording the variation in the electrooptical properties in layers of the dielectric, can be of significant interest. In this case, recording an image the light of one spectral region can be employed, for [illegible] the infrared region, and for reproduction -- the light of another spectral region, for example the visible region, i.e., it is possible to [illegible] an image converter, which converts an image in infrared rays into a visible image. The present report is dedicated to the analysis of the [illegible] of these types of converters.

A diagram of a converter is represented in Fig. 1. The visible [illegible] passing through the transparent metallic electrode 3 into the

[I - USSR - F]

APPROVED FOR RELEASE: 08/09/2001 CIA-RDP86-00513R002201520018-0"

"APPROVED FOR RELEASE: 08/09/2001 CIA-RDP86-00513R002201520018-0

JPRS 59268
6-73

4

U-6. MICROMECHANISM OF THE PROCESS OF EPITAXIAL GROWTH OF ZINC SULFIDE AND TELLURIDE ON THE GALLIUM ARSENIDE IN THE HYDROGEN FLOW

[Article by M. F. Kovtonyuk, N. M. Zondaurov, V. S. Orlov, G. N. Savkov, Moscow; Novosibirsk, III Simposium po Protsessam Rosta i Sinteza Poluprovodnikovykh Kristallov i Plenok, Russian, 12-17 June, 1972, p 57]

A study was made of the thermodynamic equilibrium in the $ZnS-H_2$ and the $ZnTe-H_2$ systems. The partial pressures of the components of the gas phase were calculated as temperature functions. The checking of the thermodynamic calculation by comparison of the calculated and experimental rates of removing the zinc telluride and sulfide by a hydrogen flow from a quasiequilibrium source demonstrated that in the temperature range of 625-925°C the results of the calculation agree well with the thermodynamic equilibrium in the investigated systems.

The processes of transport and growth of zinc chalcogenides in $ZnS-H_2$ and $ZnTe-H_2$ systems were studied. A comparison of the experimental deposition rate of zinc sulfide and telluride with the rate calculated by the quasiequilibrium and diffusion models and the observed dependence of the growth rate on the orientation of the substrate indicate that the growth process takes place with respect to a mixed diffusion-kinetic macromechanism. The authors of references [1, 2] arrive at an analogous result when investigating other open gas transport systems.

BIBLIOGRAPHY

1. Yu. M. Rumyantsev, F. A. Kuznetsov, Izv. SOAN SSSR. Ser. khim. nauk (News of the Siberian Department of the USSR Academy of Sciences, Chemical Sciences Series), No 9, vyp. 4, 49, 1969.

2. I. M. Kotelyanskiy, Izv. AN. SSSR. Neorgan. mater. (News of the USSR Academy of Sciences, Inorganic Materials), No 7, 925, 1971.

KOVTONYUK, N.F

APPROVED FOR RELEASE: 08/09/2001 CIA-RDP86-00513R002201520018-0"

"APPROVED FOR RELEASE: 08/09/2001 CIA-RDP86-00513R002201520018-0

3

SPRS 592.08
6.73

XIV-17. EFFECT OF THE TECHNOLOGICAL PARAMETERS ON THE EPITAXIAL GROWTH OF LAYERS OF THE GaAs-GaP SOLID SOLUTION

[Article by N. F. Kovtonyuk, N. M. Kondaurov, V. S. Orlov, Moscow; Novosibirsk, III, Simpozium po Protsessam Rosta i Sintezu Poluprovodnikovych Kristallov i Plenok, Russian, 12-17 June 1977, p 207]

The synthesis of the $GaAs_{1-x}P_x$ solution was carried out in a flow reactor from the initial gas solution ($H_2 + H_3As + H_3P$)($GaAs_{1-x}P_x$ + HCl) on a substrate of gallium arsenide with the orientation (111) and (100).

Results are presented from an experimental study of the growth kinetics of the epitaxial layers of the solid solution as a function of the structural characteristics of the reactor, the concentration of the gas solutions fed into the synthesis zone, the velocity of the aggregate gas flow above the substrate, and the relative velocities of the flows of the individual gas components forming the gas mixture in the deposition zone, the temperatures in the deposition zone of the layer and the source zone of the volatile gallium compounds.

Experimental data are presented on the etching kinetics of gallium arsenide using various gas mixtures occurring under specific conditions of the investigated system.

The optimal construction of the reactor and the technological parameters of the deposition process are proposed for a layer of solid solution of $GaAs_{1-x}P_x$ ($x = 0.3$) with a growth rate on the order of 90 microns/hour and for arsine and phosphine consumptions per cycle less than 100 cm^3/hour. The low consumption of hydrides in the given case is caused by the fact that the synthesis is carried out from highly diluted initial gas solutions of $H_3As + H_2$, $H_3P + H_2$.

KOVTONYUK, N.F.

APPROVED FOR RELEASE: 08/09/2001 CIA-RDP86-00513R002201520018-0"

"APPROVED FOR RELEASE: 08/09/2001 CIA-RDP86-00513R002201520018-0

USSR

UDC 621.382.2

KOVTONYUK, N. F., MOROZOV, V. A., FADIN, V. G., BOGOMOLOV, F. A., ALISULTANOV, YU. B., POTAPOV, I. S.

"Storage of Light Pulse Action in Metal-Dielectric-Semiconductor-Dielectric-Metal Structures Operating in the Prebreakdown Mode"

Leningrad, Fizika i Tekhnika Poluprovodnikov, Vol 6, No 3, 1972, pp 575-576

Abstract: A study was previously made of the phenomenon of accumulation of free carriers under the effect of pulse and stationary illumination in metal-dielectric-semiconductor-dielectric-metal structures in which there were no continuous currents through the dielectric layers [N. F. Kovtonyuk, et al., FTP, No 5, 1174, 1971]. A study has now been made of the case where significant leakage currents flow through the dielectric layers and accumulation of carriers does not occur in practice. Storage of the short light pulse action was detected. On inclusion of the voltage pulse in the absence of illumination of the sample, a capacitive current pulse is observed on the leading edge of the pulse. This capacitive current pulse is characteristic of structures without leakage. Then comes a segment where the continuous current has a comparatively low value (segment I) and only after this is a significant increase in the continuous current through the structure observed. After some time, it

1/2

APPROVED FOR RELEASE: 08/09/2001 CIA-RDP86-00513R002201520018-0"

"APPROVED FOR RELEASE: 08/09/2001 CIA-RDP86-00513R002201520018-0

USSR

KOVTONYUK, N. F., et al., Fizika i Tekhnika Poluprovodnikov, Vol 6, No 3, 1972, pp 575-576

reaches a constant value (segment II). The length of segment I is less the greater the voltage pulse amplitude. The magnitude of the saturation current in segment II approaches saturation with an increase in voltage. Under the effect of a light pulse, a photoconductivity signal is observed in segment II. Current oscillograms and the length of segment I and magnitude of the current of segment II as functions of the voltage pulse amplitude are presented.

Structures were manufactured so that the dielectric resistance was commensurate with the semiconductor resistance, and it was discovered that the sensitivity of such structures is no lower than in good metal-dielectric-semiconductor-dielectric-metal structures operating in the pulse accumulation mode. The data indicate that the prebreakdown operating mode of the investigated structures can be used in creating dynamic storage elements and also certain types of photoreceivers.

2/2

APPROVED FOR RELEASE: 08/09/2001 CIA-RDP86-00513R002201520018-0"

"APPROVED FOR RELEASE: 08/09/2001 CIA-RDP86-00513R002201520018-0

USSR UDC 621.315.592:546.19'681

KOVTONYUK, N. F., KURBATOV, L. N., NOZDRIN, V. V., ORLOV, V. S., RYABENKO, Ye. A., RASKIN, A. A., ROSTUNOVA, R. P., SOLOV"YEV, A. A., SEVAST'YANOV, V. G., UMNYAGIN, A. M., SHALUMOV, B. Z., and SHAULOV, Yu. Kh.

"Some Problems of a Technological Formulation of the Process of Obtaining Epitaxial Films of Gallium Arsenide by the Gas Phase Method"

V sb. Protsessy rosta kristallov i plenok poluprovodn. (Procedures for the Growth of Semiconductor Crystals and Films -- Collection of Works), Novosibirsk, 1970, pp 341-350 (from RZh-Elektronika i yeye primeneniye, No 7, July 1971, Abstract No 7B130)

Translation: The epitaxial films of GaAs obtained were produced by the gas phase method with the use of AsH_3, Ga, and HCL. GaAs wafers served as substrates. The surface of a wafer was subjected to chemical--mechanical processing and etching with H_2SO_4: H_2O_2: H_2O in the ratio 3: 1: 1. Synthesis of the GaAs was conducted in a reaction apparatus which was thoroughly scavenged by H_2 and etched by HCl at 950° C for 30 minutes. After cooling, the Ga was loaded into the chamber. The chamber was heated to a temperature of 850° C for activation of the Ga surface. After reduction of the temperature to 100--150° C, the GaAs substrate was introduced into the reaction zone. After heating the Ga area and the GaAs area, etching of the GaS was performed by HCl gas in a stream of AsH_3 and H_2. The films were doped by Se.

1/2

APPROVED FOR RELEASE: 08/09/2001 CIA-RDP86-00513R002201520018-0"

"APPROVED FOR RELEASE: 08/09/2001 CIA-RDP86-00513R002201520018-0

USSR

KOVTONYUK, N. F., et al., Protsessy rosta kristallov i plenok poluprovodn. (Procedures for the Growth of Semiconductor Crystals and Films -- Collection of Works), Novosibirsk, 1970, pp 341-350 (from RZh-Elektronika i yeye primeneniye, No 7, July 1971, Abstract No 7B130)

The best specimens of film had n-type conductivity and a mobility of 4000--5000 cm^2/v.sec. Films doped by Se had a concentration of $5 \cdot 10^{17}$-- $5 \cdot 10^{18}$ at/cm^3 and a mobility of 2000 cm^2/v.sec. 8 ref. V.B.

2/2

APPROVED FOR RELEASE: 08/09/2001 CIA-RDP86-00513R002201520018-0"

"APPROVED FOR RELEASE: 08/09/2001 CIA-RDP86-00513R002201520018-0

USSR UDC 621.315.592

KOVTONYUK, N. F., AMRENOV, N. M., and MAGOMEDOV, A. A., Moscow Institute of ~~Chemical Mechanical~~ Engineering

"Measurement of the Basic Electrophysical Parameters in Thin Films of Semiconductors Using the Method of an Insulated Crystal"

Tomsk, Izvestiya VUZ, Fizika, No 5, 71, pp 105-109

Abstract: The authors propose a procedure and set-up for measuring the specific resistance, concentration, and mobility of free charges in thin films of semiconductors. The basis of the method is the dependence of the magnitude of the power transmitted to the ultrahigh frequency transmission lines on the concentration and mobility of free charges in a semiconductor insulated from electrodes on both sides by dielectric films placed into the line. The experimental results are given. This article seeks to solve the problems in measuring the characteristic parameters of epitaxial films by substituting noncontact methods for the contact ones which are difficult to use in measuring samples with small linear dimensions. The authors discuss the method and support their statements with a block diagram of the set-up and with equations. The test results are shown in two figures depicting signal versus specific resistance of the crystals and signal versus concentration of free charges.

1/2

APPROVED FOR RELEASE: 08/09/2001 CIA-RDP86-00513R002201520018-0"

"APPROVED FOR RELEASE: 08/09/2001 CIA-RDP86-00513R002201520018-0

USSR

KOVTONYUK, N. F., et al, Izvestiya VUZ, Fizika, No 5, 71, pp 105-109

The measurement results were compared with measurements using the Hall effect and were found to be within satisfactory measurement error (15-25%). Finally, the authors state that by using the method of an insulated crystal it is possible to obtain the necessary information about the properties of materials, especially when the samples have an area greater than 1 mm^2 and a thickness greater than 10-100 μ. The article contains three figures and a bibliography of five titles.

2/2

APPROVED FOR RELEASE: 08/09/2001 CIA-RDP86-00513R002201520018-0"

"APPROVED FOR RELEASE: 08/09/2001 CIA-RDP86-00513R002201520018-0

UDC: 621.315.592

USSR

GOKHFEL'D, Yu.I., GURO, G.M., DAKHNOVETS, V.T., and KOVTONYUK, N.F.

"Effect of Deviations from Neutrality on the Electroluminescence of ZnS Monocrystals"

Leningrad, Fizika i Tekhnika Poluprovodnikov, Vol 4, No 4, 1970, pp 772-774

Abstract: The present communication is the most recent of a series of articles by the above-named authors regarding the electroluminescence of ZnS crystals insulated from both field electrodes. The difference between this system for investigating the characteristics of semiconductors and that of the field effect is that electrical neutrality is not violated in the specimen and that the field is screened only because of the redistribution of charges in the crystal volume. This communication describes experiments performed by the authors to confirm their ideas that: if the crystal is one of the capacitor faces (in the field effect system) its electrical neutrality will be violated when the voltage is connected; if the semiconductor resistance is high, ionization will permeate the semiconductor until the external dielectric field is completely screened by free charges; in a semiconductor in which only the impurity centers are excited, the electroluminescence may be different depending on the sign of the battery terminal connected to the crystal. Curves are given showing the radiation energy as a function of the voltage for various arrangements of the crystal.

APPROVED FOR RELEASE: 08/09/2001 CIA-RDP86-00513R002201520018-0"

"APPROVED FOR RELEASE: 08/09/2001 CIA-RDP86-00513R002201520018-0

1/2 025 UNCLASSIFIED PROCESSING DATE--20NOV70

TITLE--INFLUENCE OF A DEVIATION FROM NEUTRALITY ON THE ELECTROLUMINESCENCE OF ZINC SULFIDE SINGLE CRYSTALS -U-

AUTHOR-(04)-GOKHFELD, YU.I., GURO, G.M., DAKHNOVETS, V.T., KOVTONYUK, N.F.

COUNTRY OF INFO--USSR

SOURCE--FIZ. TEKH. POLUPROV. 1970, 4(4), 772-4

DATE PUBLISHED--------70

SUBJECT AREAS--PHYSICS, CHEMISTRY

TOPIC TAGS--SINGLE CRYSTAL, ZINC SULFIDE, COPPER, ELECTROLUMINESCENCE, DIELECTRIC CONSTANT

CONTROL MARKING--NO RESTRICTIONS

DOCUMENT CLASS--UNCLASSIFIED

PROXY REEL/FRAME--3001/0485 STEP NO--UR/0449/70/004/004/0772/0774

CIRC ACCESSION NO--AP0126237

UNCLASSIFIED

APPROVED FOR RELEASE: 08/09/2001 CIA-RDP86-00513R002201520018-0"

"APPROVED FOR RELEASE: 08/09/2001 CIA-RDP86-00513R002201520018-0

2/2 025 UNCLASSIFIED PROCESSING DATE--20NOV70

CIRC ACCESSION NO--AP0126237

ABSTRACT/EXTRACT--(U) GP-0- ABSTRACT. THE DEPENDENCE OF THE RADIATION ENERGY ON THE POTENTIAL PULSE AMPLITUDE WAS INVESTIGATED FOR INSULATED AND SEMI INSULATED ZNS-CU CRYSTALS BY A PREVIOUSLY DESCRIBED METHOD (1969). FOR INSULATED CRYSTALS, THE DEPENDENCE IS QUADRATIC AND INDEPENDENT OF THE POLARITY OF THE APPLIED POTENTIAL. FOR SEMI INSULATED CRYSTALS, A NO. OF ODSO. PECULIARITIES ARE DISCUSSED. TO BOTAIN HIGH RADIATION ENERGIES, IT IS ESSENTIAL TO INCREASE THE DIELEC. CONSTS. OF THE DIELECS. FACILITY: FIZ. INST. IM. LEBEDEVA, MOSCOW, USSR.

UNCLASSIFIED

APPROVED FOR RELEASE: 08/09/2001 CIA-RDP86-00513R002201520018-0"

"APPROVED FOR RELEASE: 08/09/2001 CIA-RDP86-00513R002201520018-0

1/2 029 UNCLASSIFIED PROCESSING DATE--18SEP70

TITLE--SURFACE CONDUCTIVITY IN POLARIZED BARIUM METATITANATE CRYSTALS -U-

AUTHOR-(02)-BOGATKO, V.V., KOVTONYUK, N.F.

COUNTRY OF INFO--USSR

SOURCE--FIZ. TVERD. TELA 1970, 12(2) 605-6

DATE PUBLISHED--------70

SUBJECT AREAS--CHEMISTRY, PHYSICS

TOPIC TAGS--SURFACE PROPERTY, ELECTRICAL CONDUCTIVITY, METAL COATING, GERMANIUM, BARIUM TITANATE, FERROELECTRIC CRYSTAL

CONTROL MARKING--NO RESTRICTIONS

DOCUMENT CLASS--UNCLASSIFIED

PROXY REEL/FRAME--1984/0128 STEP NO--UR/0181/70/012/002/0605/0606

CIRC ACCESSION NO--AP0054924

UNCLASSIFIED

APPROVED FOR RELEASE: 08/09/2001 CIA-RDP86-00513R002201520018-0"

"APPROVED FOR RELEASE: 08/09/2001 CIA-RDP86-00513R002201520018-0

2/2 029 UNCLASSIFIED PROCESSING DATE--18SEP70

CIRC ACCESSION NO--AP0054924

ABSTRACT/EXTRACT--(U) GP-0- ABSTRACT. AN ATTEMPT WAS MADE TO OBSERVE EXPTL. INCREASED SURFACE ELEC. COND. IN SINGLE DOMAIN FERROELEC. CRYSTALS. EXPTS. WERE CARRIED OUT ON SINGLE CRYSTAL BATIO SUB3, SIMILAR TO 0.02 CM THICK, WITH AN AREA OF SIMILAR TO 0.3 CM PRIME2. THE PRESENCE OF THE ABOVE EFFECT WAS ESTABLISHED WHEN N GE WAS SPUTTERED ON A PURIFIED SURFACE OF BATIO SUB3. THE RESULTS ARE EXPLAINED IN 2 WAYS: (1) UNDER THE ACTION OF A MACROSCOPIC POLARIZATION FIELD OF BATIO SUB3, THE SURFACE COND. OF THE GE LAYER CHANGES, AND (2) A LAYER OF HIGH COND. FORMED AT THE CRYSTAL SURFACE SHIELDS THE COND. OF THE GE LAYER.

UNCLASSIFIED

APPROVED FOR RELEASE: 08/09/2001 CIA-RDP86-00513R002201520018-0"

"APPROVED FOR RELEASE: 08/09/2001 CIA-RDP86-00513R002201520018-0

USSR

UDC 539.3:534.1

KOVTUN, A. V. (Kiev, Institute of Mechanics AN Ukr SSR)

"Vibrations of a Cylindrical Shell Under Random Loading"

Kiev, Academiya Nauk Ukr SSR. Prikladnaya Mechanika, Vol 7, No 2, Feb 71, pp 117-122

Abstract: Forced vibrations of a cylindrical shell under the effect of radial space-time random load are considered, taking into account the multiplicity of the excited vibration modes. The effect of flexure nonlinearity on basic probability characteristics of the shell reaction is investigated. This effect leads to a certain reduction of the flexure mean square and consequently, the more flexible shell in the transverse direction with inner pressure, is less affected by vibration modes. As an insignificant increase in shell inner pressure initiates a substantial increase in natural vibration frequency, thus, this leads to a reduction of the flexure mean square, both in linear problem and in a problem with consideration of nonlinearity. Consequently the consideration of nonlinearity leads to a still larger reduction in the flexure mean square, when compared with the linear problem. 19 formulas, 3 references.

1/1

APPROVED FOR RELEASE: 08/09/2001 CIA-RDP86-00513R002201520018-0"

"APPROVED FOR RELEASE: 08/09/2001 CIA-RDP86-00513R002201520018-0

USSR UDC 621.79

AZHAZHA, V. M., AMONENKO, V. M., KOVTUN, G. P., RYBAL'CHENKO, N. D.

"Effect of Titanium Coatings on the Plasticity of Molybdenum"

Moscow, Fizika i Khimiya Obrabotki Materialov, No 3, May-Jun 70, pp 59-62

Abstract: Titanium coatings cause a change in the plasticity of molybdenum. The nature and degree of the effect of the coatings depend on the thickness of the coating, the annealing conditions, and other factors. Titanium films up to 1 micron thick cause an increase in the elongation per unit length of molybdenum after annealing in the temperature range of 450-1100°C. Films 10 microns thick and more increase the plasticity of molybdenum if the annealing temperature after coating does not exceed 700°C, and they cause embrittlement after annealing above 800°C. The mechanism of the effect of titanium coatings on the plastic properties of molybdenum is discussed. Additional data are given on the effect of titanium coatings on the plastic properties of molybdenum and on the causes of the plasticizing and embrittling effect of titanium coatings.

Microphotographs of the samples after various heat treatments are presented. It is pointed out that during the process of annealing, diffusion of titanium in the surface layers of molybdenum takes place primarily with respect to the lattice defects, in particular, along the grain boundaries. In molybdenum the grain boundaries are the most probable centers of fracture. Fracture of polycrystalline

1/2

APPROVED FOR RELEASE: 08/09/2001 CIA-RDP86-00513R002201520018-0"

"APPROVED FOR RELEASE: 08/09/2001 CIA-RDP86-00513R002201520018-0

USSR

AZHAZHA, V. M., et al, Fizika i Khimiya Obrabotki Materialov, No 3, May-Jun 70, pp 59-62

samples of molybdenum almost always begins on the grain boundary, although propagation of the fracture can have a transcrystalline nature. The diffusion of titanium along the grain boundaries neutralizes the effect of the interstitial admixtures which usually are isolated along the grain boundaries and hamper the boundaries. This decreases the probability of occurrence of centers of fracture along the grain boundaries and leads to a more uniform deformation of polycrystals. This explains the fact that the maximum elongation of the molybdenum samples is reached with a titanium film 1 micron thick after annealing in the temperature range of 1000-1100°C.

2/2

APPROVED FOR RELEASE: 08/09/2001 CIA-RDP86-00513R002201520018-0"

"APPROVED FOR RELEASE: 08/09/2001 CIA-RDP86-00513R002201520018-0

1/2 037 UNCLASSIFIED PROCESSING DATE--11SEP70

TITLE--EFFECT OF ANNEALING CONDITIONS ON THE MECHANICAL PROPERTIES OF PURE NIOBIUM AND MOLYBDENUM COATED NIOBIUM -U-

AUTHOR--AMONENKO, V.M., AZHAZHA, V.M., KOVTUN, G.P.

COUNTRY OF INFO--USSR

SOURCE--FIZ. KHIM. MEKH. MATER. 1970, 5(6), 733-4

DATE PUBLISHED--------70

SUBJECT AREAS--MATERIALS, MECH., IND., CIVIL AND MARINE ENGR

TOPIC TAGS--NIOBIUM, HIGH PURITY METAL, METAL COATING, MOLYBDENUM, METAL FILM, GAS CONTAINING METAL, VACUUM ANNEALING, METAL DEFORMATION, GRAIN SIZE, METAL RECRYSTALLIZATION

CONTROL MARKING--NO RESTRICTIONS

DOCUMENT CLASS--UNCLASSIFIED

PROXY REEL/FRAME--1988/0622 STEP NO--UR/0359/70/005/006/0733/0735

CIRC ACCESSION NO--AP0105601

UNCLASSIFIED

APPROVED FOR RELEASE: 08/09/2001 CIA-RDP86-00513R002201520018-0"

"APPROVED FOR RELEASE: 08/09/2001 CIA-RDP86-00513R002201520018-0

2/2 037 UNCLASSIFIED PROCESSING DATE--11SEP70

CIRC ACCESSION NO--AP0105601

ABSTRACT/EXTRACT--(U) GP-0- ABSTRACT. THE EFFECT WAS STUDIED OF RESIDUAL GASES IN VACUUM ANNELAING (5 TIMES 10 PRIME NEGATIVE4 MINUS 5 TIMES 10 PRIME NEGATIVE7 TORR) AT 1000-1600DEGREES ON PURE NB. THE EFFECT OF THIN FILMS OF MO ON NB PROPERTIES AFTER ANNEALING IN VACUO WAS STUDIED ALSO. SPECIMENS (12 TIMES 2 TIMES 1 MM) WERE MADE FROM ROLLED BANDS (DEFORMATION DEGREE 80PERCENT) AND ANNEALED FOR 1 HR AT 1000-1600DEGREES. WHEN THE VACUUM WAS 5 TIMES 10 PRIME NEGATIVE7 TORR, THE TENSILE STRENGTH OF NB WAS LESS THAN THAT WHEN THE VACUUM WAS 10 PRIME NEGATIVE4 TORR; THE RELATIVE ELONGATION INCREASED. HOWEVER, ANNEALING AT IS GREATER THAN 1200DEGREES DECREASED THE RELATIVE ELONGATION, PARTICULARLY AT 10 PRIME NEGATIVE4 TORR. THESE CHANGES ARE DUE TO THE DEVELOPMENT OF PRIMARY AND SECONDARY RECRYSTN. WITH INCREASING GRAIN SIZE AT HIGHER TEMPS. INCREASED TENSILE STRENGTH AND DECREASED RELATIVE ELONGATION IS ASCRIBED TO THE INCREASED GAS CONTENT IN NB. WHEN THE NB SPECIMENS WERE COATED WITH MO, ALL THE ABOVE INDICATED EFFECTS WERE CONSIDERABLY LESS; MO IS LESS AFFECTED BY GASES THAN NB.

UNCLASSIFIED

APPROVED FOR RELEASE: 08/09/2001 CIA-RDP86-00513R002201520018-0"

"APPROVED FOR RELEASE: 08/09/2001 CIA-RDP86-00513R002201520018-0

USSR

KOVTUN, I. I.

"Solution of Certain Systems of Differential Equations with Random Perturbation"

Analit. i Kachestven. Metody Teorii Differents. Uravneniy [Analytic and Qualitative Methods in the Theory of Differential Equations -- Collection of Works], Kiev, 1972, pp 112-117 (Translated from Referativnyy Zhurnal, Kibernetika, No 3, Moscow, 1973, Abstract No 3 V102 by M. Benderskiy).

Translation: A study is made of the system

$$[L_0 - \xi(t)]x = \delta(t - t_0)x_0, \qquad (1)$$

where $L_0 = \frac{d}{dt} - A(t)$, $A(t) = \{a_{ij}(t)\}_{i,j=1,\dots,n}$, $\xi(t)$ — случ. is a random matrix of the process. The elements $\xi(t)$ are random Gaussian processes with zero means. Suppose $\tilde{G}(t, t_0)$ is the Green matrix of system (1), while $G_0(t, t_0)$ is the corresponding matrix of the unperturbed system ($\xi(t)$ 0). It is proven that

$$\tilde{G}(t, t_0) = G_0(t, t_0) + L_0^{-1}Q\tilde{G}(t, t_0), \qquad (2)$$

1/2

APPROVED FOR RELEASE: 08/09/2001 CIA-RDP86-00513R002201520018-0"

"APPROVED FOR RELEASE: 08/09/2001 CIA-RDP86-00513R002201520018-0

USSR

KOVTUN, I. I., Analit. i Kachestven. Metody Teorii Differents. Uravneniy, Kiev, 1972, pp 112-117.

where $L_0^{-1}f = \int_0^t G_0(t, s) f(s)\, ds$ and the operator Q is defined by the equation

$$M(\xi(t)\, x(t)) = QMx(t).$$

If A(t) = A and $\xi(t)$ is a homogeneous process, we can use a Fourier transform for solution of (2).

The method of successive approximations allows us to produce the following mean representation for Q:

$$Qf = \int_0^t Q(t-\tau) f(\tau)\, d\tau,$$

where Q = где $Q = M(\xi L_0^{-1}\xi) + \{M(\xi L_0^{-1}\xi L_0^{-1}\xi L_0^{-1}\xi) - M(\xi L_0^{-1}\xi) \times L_0^{-1} M(\xi L_0^{-1}\xi)\} + \ldots$.

Limiting himself to the first term, the author produces an explicit expression for Mx (t).

2/2

APPROVED FOR RELEASE: 08/09/2001 CIA-RDP86-00513R002201520018-0"

"APPROVED FOR RELEASE: 08/09/2001 CIA-RDP86-00513R002201520018-0

USSR

KOVTUN, N., Candidate of Physico-Mathematical Sciences, Deputy Director of the Donets Physico-Technical Institute of the Academy of Sciences Ukrainian SSR

"Pressure Which Yields Steel"

Izvestiya, 4 Jan 74, p 3, Cols 4-7

Abstract: Let us assume that we must prepare a drill of a predetermined diameter and length. For this we must have a metal billet of high-quality instrument steel and a metal-cutting lathe. We have the billet but its diameter is several times greater than it must be in the finished product. This means that we must remove the excess metal which in this case naturally becomes a shaving. But we can aboid this if we use a new method, that is, hydroextrusion. Essentially, the method consists of the metal being extruded through a matrix of predetermined dimensions approximately the same as paste from a tube. Of course for this we must have immeasurably higher pressures. To force cold steel to flow manageably through an opening, occasionally of a quite complex shape, is far from being a simple matter. The new method not only solves the problem of varying the shape of the billet. 1/5

APPROVED FOR RELEASE: 08/09/2001 CIA-RDP86-00513R002201520018-0"

"APPROVED FOR RELEASE: 08/09/2001 CIA-RDP86-00513R002201520018-0

USSR

KOVTUN, N., 4 Jan 74, p 3, Cols 4-7

As investigations have shown, materials undergoing hydroextrusion treatment, improve their physico-mechanical properties. The dependence of physico-mechanical properties of solids on pressure was detected more than a hundred years ago. But because of the great technical difficulties the systematic study of this problem was begun only about thirty years ago. In order to practically use the beneficial influence of high pressures on materials we need broad investigations in the field of physics of metals, physical metallurgy, and machine construction. We must develop methods for constructing and designing special equipment for the treatment of materials under high pressure and establish the optical technological conditions for this treatment. Research on problems of hydroextrusion was begun by Soviet scientists and engineers. Since 1954 they have carried out research at the Institute of High Pressure Physics of Metals of the Academy of Sciences USSR under the direction of Academician L. Vereshchagin and at the All-Union Scientific Research, Planning and Design Institute of Metallurgical Machinery under the direction of Academician A. Tselikov. Later, broad investigations in this field began to be conducted also at the Donets Physico-Technical Institute of the Academy of Sciences USSR under the direction of Academician of the Academy of Sciences Ukrainian SSR A.

2/5

APPROVED FOR RELEASE: 08/09/2001 CIA-RDP86-00513R002201520018-0"

"APPROVED FOR RELEASE: 08/09/2001 CIA-RDP86-00513R002201520018-0

USSR

KOVTUN, N., 4 Jan 74, p 3, Cols 4-7

Galkin. The basic advantage of hydroextrusion in comparison with other methods of treating parts involves the fact that the complex, prolonged, and multi-stage technology of preparation, including hot treatment of metals with pressure, cold treatment by cutting, heat treatment for the purposes of strengthening, finishing treatment (polishing), is replaced by a single-stage process of producing the finished product directly from the billet, it becomes stronger and quite plastic (which is completely unattainable with existing methods of heat treatment), and the quality of the surface is found to be no lower than class 7. For example, the durability of the instrument prepared from rods of high-speed steels subjected to hydroextrusion treatment is increased by 1.7 times. Computation of the technico-economic effectiveness of manufacturing a metal-cutting instrument by the new method shows that the introduction of this method at only ten large machine construction enterprises of the Ukraine will give two million rubles of annual savings. Data from the All-Union Scientific Research Institute of Refractory Metals and Hard Alloys determine the annual economic effect for the national economy of the country from increasing the durability of hard alloys by only 10 percent to be more than 400 million rubles.
3/5

APPROVED FOR RELEASE: 08/09/2001 CIA-RDP86-00513R002201520018-0"

"APPROVED FOR RELEASE: 08/09/2001 CIA-RDP86-00513R002201520018-0

USSR

KOVTUN, N., 4 Jan 74, p 3, Cols 4-7

The hydroextrusion method can be used to produce zinc with a tensile strength and plasticity one and a half times greater than after expensive and time--consuming treatment by drawing. Such an extraordinary transformation takes place with aluminum as well as with other metals and alloys. The technology of producing superconducting wire has always been complex. Hydroextrusion has introduced here as well its own corrections, It fully eliminates the hot processes of pressing, makes it possible to avoid rotational forging, and reduces the number of cycles for the production of superconducting wire by several times. The area of application of the new method is indeed unlimited. This includes machine construction and metallurgy, radio electronics and power engineering, the aviation industry and ship building. Strictly speaking, it is difficult to see an area where hydroextrusion could not find a broad field of activity. The scientists of the Donets Physico-Technical Institute of the Academy of Sciences Ukrainian SSR are introducing this new technology at a number of enterprises of the country. There are excellent testimonials, significiant amounts of economic effect are being achieved, data on savings in metal are being cited, as well as the release of lathe equipment, etcetera. Reports are coming from Moscow, Perma, Donetsk, Chirchin, and other cities about this. Thus the advantages of the new method are obvious. Unfortunately

4/5

APPROVED FOR RELEASE: 08/09/2001 CIA-RDP86-00513R002201520018-0"

"APPROVED FOR RELEASE: 08/09/2001 CIA-RDP86-00513R002201520018-0

USSR

KOVTUN, N., 4 Jan 74, p 3, Cols 4-7

the introduction of the hydroextrusion treatment of metals and alloys is not taking on such a broad front as we would desire. Basically only scientists are displaying interest in it. As far as the production workers are concerned they do not object to being armed with the new method as long as the scientists give them not only the technical documentation but also the equipment. Unfortunately we have not completed the commerical production of devices and presses for the new production process. And there is not plant where the technological processes developed by the scientists can undergo technical testing, where the practical problems of hydroextrusion could be solved tomorrow. The Donets Physico-Technical Institute of the Academy of Sciences of the Ukrainian SSR which for the given problem [hydroextrusion] was determined to be the leading institute has no sufficient base for carrying out the research and introductory work on a broad scale. It seems that the directors of the industrial ministries and departments must pay close attention to the problems of hydroextrusion because this is dictated by the interests of scientific--technical progress of the nation.

5/5

APPROVED FOR RELEASE: 08/09/2001 CIA-RDP86-00513R002201520018-0"

"APPROVED FOR RELEASE: 08/09/2001 CIA-RDP86-00513R002201520018-0

USSR

VASIL'KOVSKIY, V. A., KOVTUN, N. M., KUPROYANOV, A. K., NIKITIN, S. A., and OSTROVSKIY, V. F.

"Study of Nuclear Magnetic Resonance in $Gd_xY_{1-x}Fe_2$ Compounds"

Moscow, Zhurnal Eksperimental'noy i Teoreticheskoy Fiziki, Vol 65, No 2 (8), 1973, pp 693-697

Abstract : The nuclear magnetic resonance spectra were measured on gadolinium and yttrium nuclei in $Gd_xY_{1-x}Fe_2$ compounds at a temperature of 77° K. The contributions to the hyperfine fields in the gadolinium and yttrium nuclei on the part of the nearest neighbors of the gadolinium atom sublattice were evaluated. The primary contribution to the hyperfine fields in yttrium and gadolinium is made by the iron atom sublattice.

The variation of the position of the center of gravity of the nuclear magnetic resonance spectra of gadolinium and yttrium as a function of the atom % concentration of gadolinium and the variation with temperature, of the nuclear magnetic resonance of Gd^{155} in $GdFe_2$ and Y^{89} in YFe_2 are plotted. A table is presented for the probability of replacement of the neatest Gd atoms by a Y atom and the experimental procedure for obtaining and recording the 1/2

APPROVED FOR RELEASE: 08/09/2001 CIA-RDP86-00513R002201520018-0"

"APPROVED FOR RELEASE: 08/09/2001 CIA-RDP86-00513R002201520018-0

USSR

VASIL'KOVSKIY, V. A., et al., Zhurnal Eksperimental'noy i Teoreticheskoy fiziki, Vol 65, No 2 (8), 1973, pp 693-697

nuclear resonance spectra is described in detail. The dependence on composition and temperature of the nuclear magnetic resonance of Gd^{155}, Gd^{157}, and Y^{89} is determined both by the iron and gadolinium sublattices.

2/2

APPROVED FOR RELEASE: 08/09/2001 CIA-RDP86-00513R002201520018-0"

"APPROVED FOR RELEASE: 08/09/2001 CIA-RDP86-00513R002201520018-0

1/3 013 UNCLASSIFIED PROCESSING DATE--09OCT70

TITLE--ALPHA-(DITHIOCARBOXY)AMINO ACID AS MASKING REAGENTS -U-

AUTHOR-(04)-BUSEV, A.I., BYRKO, V.M., KOVTUN, N.P., KARALASHVILI, L.G.

COUNTRY OF INFO--USSR

SOURCE--ZH. ANAL. KHIM. 1970, 25(2), 237-42

DATE PUBLISHED--------70

SUBJECT AREAS--CHEMISTRY

TOPIC TAGS--ORGANIC SULFUR COMPOUND, AMINO ACID, HYDROGEN SULFIDE, CARBON DISULFIDE, COPPER COMPLEX, COBALT COMPLEX, METAL COMPLEX COMPOUND, PHOTOMETRIC ANALYSIS

CONTROL MARKING--NO RESTRICTIONS

DOCUMENT CLASS--UNCLASSIFIED

PROXY REEL/FRAME--1993/0925 STEP NO--UR/0075/70/025/002/0237/0242

CIRC ACCESSION NO--AP0113760

UNCLASSIFIED

APPROVED FOR RELEASE: 08/09/2001 CIA-RDP86-00513R002201520018-0"

"APPROVED FOR RELEASE: 08/09/2001 CIA-RDP86-00513R002201520018-0

2/3 013 UNCLASSIFIED PROCESSING DATE--09OCT70

CIRC ACCESSION NO--AP0113760

ABSTRACT/EXTRACT--(U) GP-0- ABSTRACT. N-(DITHIOCARBOXY-N-METHYLGLYCINE DI-NH SUB4 SALT (I), A DI-NH SUB4 SALT OF N-(DITHIOCARBOXY)SARCOSINE, WAS SYNTHESIZED AND SUGGESTED FOR MASKING OF A NO. OF ELEMENTS OF THE H SUB2 S AND (NH SUB4) SUB2 S GROUPS. I IS PREPD. BY ADDING CS SUB2 TO AN AQ.-AMMONIACAL SOLN. OF SARCOSINE. NONREACTED CS SUB2 WAS EXTD. WITH PHME, ETOH WAS ADDED TO CRYSTALLIZE I, DECOMP. 139DEGREES, SOL. IN H SUB2 O, LESS SOL. IN ALC. AND CHCL SUB3. I REACTS WITH CU(II) IN A 2:1 RATIO TO FORM A COLORED COMPLEX WITH MAX. ABSORBANCE AT 440 M MU, WITH NI(II) IN THE SAME RATIO WITH A MAX. AT 350 M MU. CO REACTS WITH I IN A 1:3 RATIO; THE COMPLEX HAS MAX. ABSORBANCE AT 320 M MU. ZN(II), GA(III), CR(III), MG(II), SB(III), AS(III), NB(V), AND W(VI) DO NOT FORM PPTS. OR COLORED COMPLEXES WITH I. A COMPLEXOMETRIC METHOD WAS DEVELOPED FOR THE DETN. OF GA WITH 4-(2,PYRIDYLAZO)RESORCINOL (II) AT PH 2-3. CD, IN, AND BI ARE MASKED WITH I AND DO NOT INTERFERE IN THE DETN. AL, BA, CA AND MG DO NOT INTERFERE. NEUTRALIZE THE SOLN. WITH H NAOH, ADJUST TO PH 2-3 WITH N HOAC, THEN ADD A 25 FOLD EXCESS OF I COMPARED TO THE ELEMENT THAT INTERFERES, 2-3 DROPS OF II AND TITRATE WITH COMPLEXON III FROM RED TO YELLOW. A PHOTOMETRIC METHOD WAS DEVELOPED FOR THE DETN. OF GA WITH II WITHOUT SEPN. OF IN. ADJUST THE SOLN. CONTG. GA AND IN TO PH 3.25 WITH AN NH SUB4 OAC BUFFER, ADD 1 ML 5PERCENT AQ. I, THEN 1.25 ML II, AND DIL. TO 25 ML WITH THE BUFFER. MEASURE THE ABSORBANCE PHOTOMETRICALLY BY USING A GREEN FILTER. AN EXTN. PHOTOMETRIC METHOD WAS DEVELOPED FOR W DETN. WITH RHODAMINE B (III); NO INTERFERENCE IS ELIMINATED BY MASKING WITH I.

UNCLASSIFIED

APPROVED FOR RELEASE: 08/09/2001 CIA-RDP86-00513R002201520018-0"

"APPROVED FOR RELEASE: 08/09/2001 CIA-RDP86-00513R002201520018-0

3/3 013 UNCLASSIFIED PROCESSING DATE--09OCT70

CIRC ACCESSION NO--AP0113760

ABSTRACT/EXTRACT--ADD TO THE SOLN. CONTG. W AND MO 15 ML 0.15N HCL, 20-30 MG I, AND 5 ML 0.1PERCENT III SOLN. EXT. W WITH 2 50 ML PORTIONS OF CHCL 3. COMBINE THE EXTS., WASH TWICE WITH 15 ML 0.15N HCL AND AGAIN EXT. WITH 5 ML CHCL SUB3. DIL. THE COMBINED ORG. LAYERS TO 100 ML WITH ISOAMYL ALC. AND DET. PHOTOMETRICALLY BY USING A NO. 4 FILTER.

FACILITY: MOSCOW STATE UNIV., MOSCOW, USSR.

UNCLASSIFIED

APPROVED FOR RELEASE: 08/09/2001 CIA-RDP86-00513R002201520018-0"

"APPROVED FOR RELEASE: 08/09/2001 CIA-RDP86-00513R002201520018-0

USSR UDC 612.014.3

DISHOVSKIY, Kh. D., KAGAN, Yu. S., KOVTUN, S. D., KOKSHAREVA, N. V., TODIONOV, G. O., and SASINOVICH, L. M., Division of Experimental Toxicology, All-Union Institute of the Hygiene and Toxicology of Pesticides, Polymers, and Plastics

"The Physiological Mechanism of the Action of Dipyroxime"

Kiev, Fiziologichniy Zhurnal, Vol 19, No 3, May/Jun 73, pp 310-314

Abstract: Therapeutic administration of dipyroxime to rats poisoned with the insecticides DDVP (0,0-dimethyl-2,2-dichlorovinyl phosphate) and chlorophos resulted in a partial reactivation of cholinesterase in the brain, spinal cord, and striated muscles, as shown by histochemical data. Cytophotometric studies showed that the reactivation of cholinesterase under the effect of dipyroxime in the brain of animals poisoned with DDVO was most pronounced in the caudate nucleus - putamen complex. Electromyographic investigation indicated a beneficial effect of dipyroxime on the transmission of impulses in nerve-muscle synapses. The results of the study of the physiological action of dipyroxime substantiated the conclusion arrived at in earlier work that this drug is effective in the treatment of poisonings with DDVP and chlorophos (cf. Kagan et al, Farmakol. i Toksikol., 3, 359, 1971).

1/1

APPROVED FOR RELEASE: 08/09/2001 CIA-RDP86-00513R002201520018-0"

"APPROVED FOR RELEASE: 08/09/2001 CIA-RDP86-00513R002201520018-0

Acc. Nr: AP0041736 Abstracting Service: CHEMICAL ABST. Y-70 Ref. Code: UR0459

79605u **Features of thermal and chemical (acid) degradation of poly-1,3-dioxolane.** Kumpanenko, E. N.; Kovtun, T. S.; Varshavskaya, A. L.; Karnilova, L. V.; Enikolopyan, N. S. (Inst. Khim. Fiz., Moscow, USSR). *Vysokomol. Soedin., Ser. A* 1970, 12(1), 229-42 (Russ). The kinetics and compn. of the products of the acid and thermal degradation of poly-1,3-dioxolane (I) at 140-310° were studied. I was prepd. by bulk polymn. of 1,3-dioxolane and had mol. wt. 16-18 × 10^3. Acid degradation was carried out in the presence of H_3PO_4 or picric acid. Initiation of degradation proceeded via "random" homo- or heterolytic cleavage of the chain at the acetal group. The major product of acid degradation was the cyclic monomer, while thermal degradation yielded a wide variety of volatile products including AcH, ethylene oxide, MeOH, and EtOH. Oligomeric fragments with d.p. 5-8 were formed in both cases; those formed by a thermal degradation were linear, but those formed during acidolysis were apparently cyclic. The fraction of monomer in the products decreased with increasing temp. and extent of decompn. Mechanisms for the formation of the major decompn. products are discussed. The activation energy and kinetic chain length for depolymn. (ν) were 17 ± 2 kcal/mole and 13-20, resp., for acidolysis, and 31 ± 2 kcal/mole and 5-8 × 10^{-2}, resp., for thermal cleavage. ν for acidolysis was independent of temp., but ν for thermal cleavage decreased sharply with increasing temp. Depolymn. was not the primary mechanism for thermal cleavage. DBJR

E6.

7

REEL/FRAME
19751613

APPROVED FOR RELEASE: 08/09/2001 CIA-RDP86-00513R002201520018-0"

"APPROVED FOR RELEASE: 08/09/2001 CIA-RDP86-00513R002201520018-0

USSR

UDC 669.011.7

SAMSONOV, G. V., KOVTUN, V. I., TIMOFEYEVA, I. I., ROGOZINSKAYA, A. A., And VINITSKIY, A. G., Institute of Problems of Material Science, Academy of Sciences Ukrainian SSR, Kiev

"Nature of the High Microhardness of Surfaces Hardened by Friction"

L'vov, Fiziko-Khimicheskaya Mekhanika Materialov, Vol 9, No 4, 1973, pp 26-30

Abstract: Strengthening of surfaces by dry sliding friction in a vacuum was studied for refractory metals of groups IV-VIII of the periodic system. Microhardness of the samples rises to a rather high maximum value and then drops off. In addition to microhardness, lattice parameters, mosaic block size, type II distortion, and dislocation density of the metals were determined after undergoing friction. The data on the fine structure and dislocation density in the deformed layers do account for the high degree of metal hardening nor do they explain the variance in metal strengthening at the characteristic pressure equal to 25% of the tensile strength. It was shown that the decisive factor in the strengthening is the electron structure of the metals and the change in this structure during deformation by friction. 6 figures, 3 tables, 21 bibliographic references.

1/1

APPROVED FOR RELEASE: 08/09/2001 CIA-RDP86-00513R002201520018-0"

"APPROVED FOR RELEASE: 08/09/2001 CIA-RDP86-00513R002201520018-0

1/2 024 UNCLASSIFIED PROCESSING DATE--20NOV70

TITLE--ELECTRODEPOSITION OF IRON ALLOYS -U-

AUTHOR-(04)-VINITSKIY, A.G., KOVTUN, V.I., PODA, V.A., RYASKOVSKIY, L.M.

COUNTRY OF INFO--USSR

SOURCE--U.S.S.R. 264,097
REFERENCE--OTKRYTIYA, IZOBRET., PROM. OBRAZTSY, TOVARNYE ZNAKI 1970,
DATE PUBLISHED--10FEB70

SUBJECT AREAS--CHEMISTRY, MATERIALS

TOPIC TAGS--CHEMICAL PATENT, IRON COBALT ALLOY, MANGANESE ALLOY, ELECTROLYTE, ELECTRODEPOSITION, METAL DEPOSITION

CONTROL MARKING--NO RESTRICTIONS

DOCUMENT CLASS--UNCLASSIFIED
PROXY REEL/FRAME--3004/1327 STEP NO--UR/0482/70/000/000/0000/0000

CIRC ACCESSION NO--AA0132092
UNCLASSIFIED

APPROVED FOR RELEASE: 08/09/2001 CIA-RDP86-00513R002201520018-0"

"APPROVED FOR RELEASE: 08/09/2001 CIA-RDP86-00513R002201520018-0

2/2 024 UNCLASSIFIED PROCESSING DATE--20NOV70

CIRC ACCESSION NO--AA0132092

ABSTRACT/EXTRACT--(U) GP-0- ABSTRACT. AN FE,CO,MN ALLOY IS PREPD. FROM AN ELECTROLYTE CONTG. FECL SUB2 100-150, COCL SUB2 50-100, AND MNCL SUB2 100-200 G-L. AT PH 0.8-1.6, C.D. 20-50 A-DM PRIME2, AND 30-60DEGREES.

FACILITY: KIROVOGRADSKIY INSTITUT SEL'SKOKHOZYAYSTVENNOGO MASHINOSTROYENIYA.

UNCLASSIFIED

APPROVED FOR RELEASE: 08/09/2001 CIA-RDP86-00513R002201520018-0"

"APPROVED FOR RELEASE: 08/09/2001 CIA-RDP86-00513R002201520018-0

USSR UDC 542.91:547.1'118

KOVTUN, V. YU., GILYAROV, V. A., KABACHNIK, N. I., Institute of Heteroorganic Compounds of the USSR Academy of Sciences

"Obtaining Some Asymmetric Diarylimines of Tetraphenylmethylene-diphosphine"

Moscow, Izvestiya Akademii Nauk SSSR-- Seriya Khimicheskaya, No 11, 1972, p 2612

Abstract: The experimental procedure and results are presented from using the reaction of tetraphenylmethylenediphosphine-(N-phenylimine) with arylazides to obtain tetraphenylmethylenediphosphine-(N-phenyl-N'-p-tolyldiimine), tetraphenylmethylenediphosphine-(N-phenyl-N'-m-tolyldiimine), and tetraphenylmethylenediphosphine-(N-phenyl-N'-m-chlorophenyldiimine). The paramagnetic resonance spectra were taken on the Perkin-Elmer R-12 spectrometer.

1/1

APPROVED FOR RELEASE: 08/09/2001 CIA-RDP86-00513R002201520018-0"

"APPROVED FOR RELEASE: 08/09/2001 CIA-RDP86-00513R002201520018-0

USSR UDC 542.91:661.718.1

KOVTUN, V. YU., GILYAROV, V. A., and KABACHNIK, M. I., Institute of Metal-organic Compounds, Academy of Sciences USSR

"Some Properties of Tetraphenylmethylenediphosphinedi(N-phenylimine)"

Moscow, Izvestiya Akademii Nauk SSSR, Seriya Khimicheskaya, No 10, Oct 71, pp 2217-2221

Abstract: Treating phenylazide with tetraphenylmethylenediphosphine or tetraphenylethylenediphosphine by the method of Shtaundinger yields tetraphenylmethylenediphosphinedi-(N-phenylimine) (I) and tetraphenylethylenediphosphinedi-(N-phenylimine) (II) respectively. These two compounds differ substantially in their properties. Treating (I) with excess methyl iodide leads tothe formation of monomethyliodide (II) while under analogous conditions (II) gives dimethyliodide (IV). Hydrolysis of (III) followed by separation of the amine showed a 1:1 ratio of N-methylamine:aniline, indicating that only one phosphineimine group was alkylated in (I). Refluxing (I) with aromatic aldehydes in xylene produces tetraphenylemthylenediphosphine (V). Treating (I) with excess metallic sodium or butyllithium in tetrahydrofurane leads to the replacement of one hydrogen atom on the methylene group. Metallic derivatives of (I) react with CH_3I in tetrahydrofurane yielding diphenyl-

1/2

APPROVED FOR RELEASE: 08/09/2001 CIA-RDP86-00513R002201520018-0"

"APPROVED FOR RELEASE: 08/09/2001 CIA-RDP86-00513R002201520018-0

USSR

KOVTUN, V. YU., et al., Izvestiya Akademii Nauk SSSR, Seriya Khimicheskaya, No 10, Oct 71, pp 2217-2221

[N-methyl-N'-phenylamino]-[diphenyl(N'-methyl-N'-phenyl)aminophosphoranilidene]methylphosphonium iodide.

2/2

APPROVED FOR RELEASE: 08/09/2001 CIA-RDP86-00513R002201520018-0"

"APPROVED FOR RELEASE: 08/09/2001 CIA-RDP86-00513R002201520018-0

UDC 543.42+541.6:661.718.1

USSR

MATROSOV, Ye. I., GILYAROV, V. A., KOVTUN, V. Yu., and KABACHNIK, M. I., Institute of Heteroorganic Compounds, Academy of Sciences USSR

"Spectra and Structure of Salts of Triphenylphosphine-N-phenylimine and Its Complexes with Phenols"

Moscow, Izvestiya Akademii Nauk SSSR, Seriya Khimicheskaya, No 6, Jun 71, pp 1162-1168

Abstract: The authors studied IR spectra of halomethylates and the hydrobromide of triphenylphosphine-N-phenylimine and its complexes with phenol, p-bromophenol and pentachlorophenol. On the basis of the resultant spectral data the structure of phosphinimine salts can be characterized as mesomeric with a pronounced phosphonium structure. The interaction of phosphinimine with phenol and p-bromophenol gives complexes with a hydrogen bond of the composition 1:1, isolated in crystalline form. Spectral data on the pentachlorophenol-phosphinimine complex indicate a strong acid-base interaction which apparently results in protonation of the phosphinimine molecule.

1/1

APPROVED FOR RELEASE: 08/09/2001 CIA-RDP86-00513R002201520018-0"

"APPROVED FOR RELEASE: 08/09/2001 CIA-RDP86-00513R002201520018-0

USSR

UDC 547.241:541.45

KOVTUN, V. Yu., GILYAROV, V. A., KOROLEV, B. A., MATROSOV, Ye. I., and KABACHNIK, M. I., Institute of Organometallic Compounds, Acad. Sc. USSR and Scientific Research Institute of Intermediates and Dyes

"Basicity and Nucleophilicity of Some Methylenediphosphinediimines"

Leningrad, Zhurnal Obshchey Khimii, Vol 41 (103), No 4, Apr 71, pp 772-778

Abstract: A series of substituted tetraphenylmethylenediphosphinedi-(N-phenylimines) was obtained from tetraphenylmethylenediphosphine by treatment with two moles of substituted phenylazides and converted to monomethiodides by refluxing them in benzene in presence of methyl iodide. Equimolar quantities of tetraphenylmethylenediphosphine react with benzyl or p-nitrobenzyl bromide in benzene to give the corresponding benzylphosphonium salts which upon reaction with phenylazides yielded diphenylbenzyl(or p-nitrobenzyl) [diphenyl(N-phenylimino)phosphinylmethyl(or phosphonylmethyl)]phosphonium bromides. The pK_a values were determined in nitromethane for all the compounds obtained. It was determined that the basicity of the nitrogen atom in these compounds depends on the nature of substituents in the phenyl ring bound to the imine nitrogen atom. Hammet's equation applies to these compounds.

1/1

APPROVED FOR RELEASE: 08/09/2001 CIA-RDP86-00513R002201520018-0"

"APPROVED FOR RELEASE: 08/09/2001 CIA-RDP86-00513R002201520018-0

1/2 013 UNCLASSIFIED PROCESSING DATE--18SEP70

TITLE--EFFECT OF OXYGEN PRESSURE AND ROASTING TEMPERATURE ON THE EXCESS METAL CONTENT IN POLYCRYSTALLINE SAMPLES OF BARIUM OXIDE, STRONTIUM

AUTHOR-(02)-NESTEROVA, I.L., KOVTUNENKO, P.V.

COUNTRY OF INFO--USSR

SOURCE--ZH. FIZ. KHIM. 1970, 44(2), 506-7

DATE PUBLISHED--------70

SUBJECT AREAS--MATERIALS

TOPIC TAGS--ROASTING FURNACE, BARIUM OXIDE, OXYGEN, STRONTIUM COMPOUND, POLYCRYSTAL

CONTROL MARKING--NO RESTRICTIONS

DOCUMENT CLASS--UNCLASSIFIED

PROXY REEL/FRAME--1988/0684 STEP NO--UR/0076/70/044/002/0506/0507

CIRC ACCESSION NO--AP0105660

UNCLASSIFIED

APPROVED FOR RELEASE: 08/09/2001 CIA-RDP86-00513R002201520018-0"

"APPROVED FOR RELEASE: 08/09/2001 CIA-RDP86-00513R002201520018-0

2/2 013 UNCLASSIFIED PROCESSING DATE--18SEP70

CIRC ACCESSION NO--AP0105660

ABSTRACT/EXTRACT--(U) GP-0- ABSTRACT. ROASTING OF POLYCRYST. SAMPLES OF SRO AND ITS EQUIMOLAR SOLN. WITH BAO AT AN O PRESSURE OF (3 PLUS OR MINUS 1) TIMES 10 PRIME NEGATIVE3 MM HG LEADS TO EXCESS METAL CONCNS. THAT ARE EXPONENTIALLY TEMP. DEPENDENT (900-1150DEGREES). AT 10 PRIME NEGATIVE3 MINUS 10 PRIME NEGATIVE4 TORR O, THE CONCN. OF EXCESS METAL IS INVERSELY PROPORTIONAL TO THE PRESSURE. THE BULK OF THE EXCESS METAL IS LOCALIZED ON THE SURFACE OF THE OXIDE CRYSTALS.

UNCLASSIFIED

APPROVED FOR RELEASE: 08/09/2001 CIA-RDP86-00513R002201520018-0"

"APPROVED FOR RELEASE: 08/09/2001 CIA-RDP86-00513R002201520018-0

AA0052407_ KOVTUNENKO W-7

Soviet Inventions Illustrated, Section I Chemical, Derwent,

2/70

243772 SYNTHETIC YARN MANUFACTURE is carried out in a device comprising hopper 1, container 2 for dye, tube 3 with screw 4, and melting element 5. The dyed polyamide is delivered to the element by port 9 of tube 3, the dye is metered out by pump 10. Brushes 8 at the top of the screw promote uniform spread of the dye, channels 12 ensure the evacuation of readily volatile fractions towards the hydraulic seal 13. The melt and the dye are fed to the spinneret 14 for yarn formation 17.11.67. as 1198120/28-12, KOVTUNENKO, V.T. et al. (3.10.69) Bul. 17/14.5.69. Class 29B, Int. Cl. D 01d.

1

Kovtunenko, V. T.; Naumenko, V. I.; Zvenyatskaya, M. L.

1/2

19821029

APPROVED FOR RELEASE: 08/09/2001 CIA-RDP86-00513R002201520018-0"

"APPROVED FOR RELEASE: 08/09/2001 CIA-RDP86-00513R002201520018-0

AA0052407

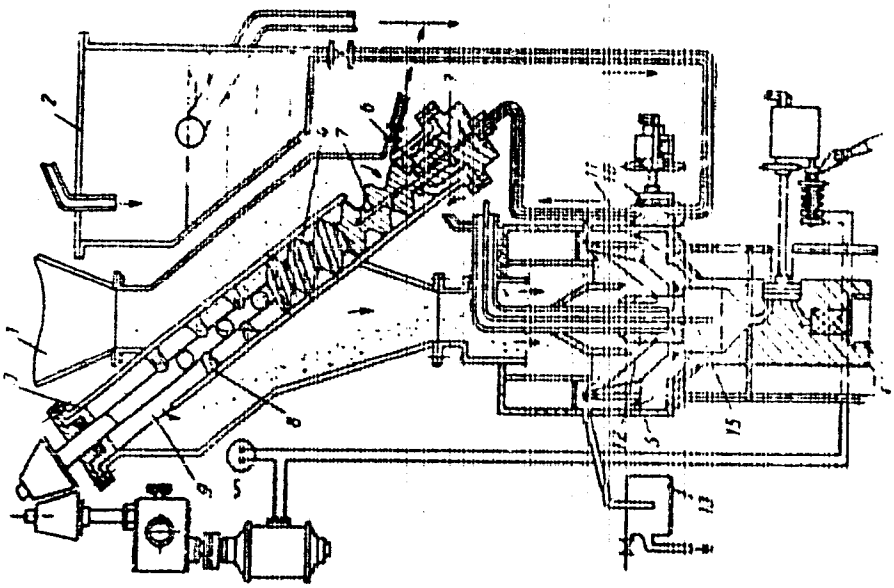

2/2

19821030

APPROVED FOR RELEASE: 08/09/2001 CIA-RDP86-00513R002201520018-0"

"APPROVED FOR RELEASE: 08/09/2001 CIA-RDP86-00513R002201520018-0

USSR

UDC 616.981.551-085.373.6-084

KOVTUNOVICH, L. G., KARAVANOV, A. G., and NAZARCHUK, L. V., Kiev Scientific Research Institute of Hematology and Blood Transfusion

"Obtaining Antitetanus Gamma-Globulin From Plasma of Immunized Donors"

Kiev, Vrachebnoye Delo, No 8, 1971, pp 140-144

Abstract: Since sera of noninoculated persons surviving tetanus contain no antitoxin, only the plasma from persons immunized with tetanus antitoxin can be used in preparing antitetanus gamma-globulin. In this study the first series of antitetanus gamma-globulin was prepared from plasma donors taken every 3, 5, 10 months after single inoculation of chemical sorbed typhoid-paratyphoid tetanus vaccine. The antitoxin level was determined in 38 individual sera at the same time by titration in white mice. Data showed that the antitoxin level in the sera was low, and in 21 out of 38 sera (in 55.4%), titers were below the protective level, that is, lower than 0.01 IU/ml. To prepare the next series of gamma-globulin, plasma was used from servicemen donors, taken during the first two months after the regular annual polyvalent inoculation. The induction of tetanus antitoxin in response to regular inoculation was fairly low. The titer was higher than 5 IU/ml in only 27.6% of sera tested, while most sera -- 60.6% -- contained antitoxin in a titer

1/2

APPROVED FOR RELEASE: 08/09/2001 CIA-RDP86-00513R002201520018-0"

"APPROVED FOR RELEASE: 08/09/2001 CIA-RDP86-00513R002201520018-0

USSR

KOVTUNOVICH, L. G., et al., Vrachebnoye Delo, No 8, 1971, pp 140-144

higher than 0.01, but less than 5 IU/ml. To obtain gamma-globulin of higher quality, plasma of inhabitants of Petropavlovskiy Rayon, Dnepropetrovskaya Oblast (twice immunized with sorbed tetanus antitoxin during 1965-1966, followed by revaccination after one year) was used. Individual sera and plasma for gamma globulin preparation were taken from 90 subjects in this group after a second revaccination. In 49.45%, the antitoxin level varied from 0.01 to 5 IU/ml, and in the same percentage -- from 5 to 100 IU/ml. It was found that the best antitetanus toxin levels are obtained upon re-vaccinating only persons with an initial high antitoxin level.

2/2

APPROVED FOR RELEASE: 08/09/2001 CIA-RDP86-00513R002201520018-0"

"APPROVED FOR RELEASE: 08/09/2001 CIA-RDP86-00513R002201520018-0

Acc. Nr: AP0050814 Abstracting Service: CHEMICAL ABST. 5-70 Ref. Code: UR0502

K

98347c Effect of the hypofunction of the thyroid gland on glycogenesis and RNase activity of the liver. Kovtunyak, N. A.; Tsapok, P. I.; Meshchishen, I. F. (Chernovtsy State Med. Inst., Chernovtsy, USSR). *Probl. Endokrinol.* 1970, 16(1), 64-7 (Russ). Blocking of the thyroid gland function in rats with 6-methylthiouracil (10 mg/100 g orally for 20 days) increased the liver glycogen and K levels and decreased the blood sugar, K, and Cu and liver Cu levels. 6-Methylthiouracil action reduced the protein content and increased the RNase activity of the liver. The increased enzymic activity may be connected with the increased liver K and the RNA breakdown may lead to disruption of protein biosynthesis. BJJR

1/1

REEL/FRAME
19810816

2

APPROVED FOR RELEASE: 08/09/2001 CIA-RDP86-00513R002201520018-0"

"APPROVED FOR RELEASE: 08/09/2001 CIA-RDP86-00513R002201520018-0

KOVYGIN, G. F.

SANITARY-HYGIENIC EVALUATION OF THE PROTECTIVE EFFECTIVENESS OF THE "LEPESTOK" MASK FOR FINELY DISPERSED AEROSOLS

(Article by L. N. Savel'yev, A. N. Bulygina, M. V. Shushinskiy and G. F. Kovygin; Moscow, Aktual'nye Voprosy Kosmicheskoy Biologii i Meditsiny (Current Problems in Space Biology and Medicine), Russian, 1971, pp 333-334)

The "Lepestok" mask is now the most widely used means for individual protection of the organs of respiration. The theoretical protective capability of the respirator, according to the instructions on use of the "Lepestok" respirator, is about 99%, that is, it almost does not differ from the intercepting properties of filters made of PPP fabric. However, information on the actual effectiveness of respirators used under working conditions could not be found in the available literature.

Our investigations were made under conditions characterized by atmospheric contamination by finely dispersed aerosols whose concentration in individual cases exceeded the maximum admissible concentration (MAC). The investigations were made at several working places in precise accordance with the Metodika Opredeleniya Zashchitnoy Effektivnosti Respiratora "Lepestok" (Pri Ekspluatatsionnykh Usloviyakh) (Method for Determining the Protective Effect of the "Lepestok" Respirator (Under Operating Conditions)). The time required for taking a sample was 30-60 minutes. The duration of presence of the subjects continuously at the working place varied from two to three hours. During rest in a clean zone the respirator was removed and then used again.

The results of the investigations revealed that the effectiveness of air purification in 53% of the cases exceeded 90%, and in 16% of the cases attained 100%. However, in 26% of the cases the effectiveness did not exceed 75%. The mean weighted effectiveness was 87%. It should be noted that when

JPRS 56, 499
14 JULY 72

APPROVED FOR RELEASE: 08/09/2001 CIA-RDP86-00513R002201520018-0"

"APPROVED FOR RELEASE: 08/09/2001 CIA-RDP86-00513R002201520018-0

Acc. Nr: AP0036530 Ref. Code: UR 0069

PRIMARY SOURCE: Kolloidnyy Zhurnal, 1970, Vol 32, Nr 1, pp 63-66

1 BEHAVIOR OF AQUEOUS SUSPENSIONS OF POLYACRYLONITRILE IN ALTERNATING ELECTRIC FIELD

Kovylov, A. Ye.; Lavrov, I. S.

Summary

The optical density of aqueous suspensions of polyacrylonitrile has been found to change in an alternating low frequency electric field. This change is explained by the oriented aggregation of polyacrylonitrile particles along the lines of force due to their polarization interaction caused by the ionic double layer polarization.

D.A.

REEL/FRAME 19721378

APPROVED FOR RELEASE: 08/09/2001 CIA-RDP86-00513R002201520018-0"

"APPROVED FOR RELEASE: 08/09/2001 CIA-RDP86-00513R002201520018-0

USSR

UDC 669.822.004.2

KORNILOV, A. N., KOVYGIN, G. F.

"Sanitary-Dosimetric Control of the Environment at Enterprises for Extracting and Processing Radioactive Ores"

Vopr. gigieny truda na uranov. rudnikakh i obogatit. predprivatiyakh -- V sb. (Problems of Hygiene of Labor in Uranium Mines and Beneficiation Enterprises -- collection of works), Moscow, Atomizdat Press, 1971, pp 103-116 (from RZh-Metallurgiya, No 4, Apr 71, Abstract No 4G267)

Translation: The basic procedures for all-around sanitary-dosimetric inspection of the external environment which are used at enterprises for extraction and processing of uranium ores are investigated. These procedures include control of the radioactive contamination of the territory, atmospheric air, open bodies of water, and water supply. The bibliography has 9 entries.

1/1

APPROVED FOR RELEASE: 08/09/2001 CIA-RDP86-00513R002201520018-0"

"APPROVED FOR RELEASE: 08/09/2001 CIA-RDP86-00513R002201520018-0

Acc. Nr: A P0036430

Ref. Code: UR 0213

PRIMARY SOURCE: Okeanologiya, 1970, Vol 10, Nr 1, pp 113-116

A. F. BERESNEV, V. M. KOVYLIN

THE RELIEF OF THE BASEMENT AND THE DISTRIBUTION OF THICKNESSES OF BOTTOM SEDIMENT IN THE CENTRAL PART OF THE JAPAN SEA

Summary

The seismic studies carried out in the Japan Sea by the Institute of Oceanology have been used by the authors as a basis for making a scheme of the sea bed relief as well as a scheme of the distribution of thicknesses of bottom sediment in its central part. Thicknesses of sediments are found to be dependent on the depth of the surface of the primary tectonic relief. The greatest thicknesses are confined to the areas of the deepest position of the basement whereas the raised parts of the latter are characterized by small thicknesses of sedimentary cover or even by its absence.

D.M.

1/1

REEL/FRAME
19721274

12

APPROVED FOR RELEASE: 08/09/2001 CIA-RDP86-00513R002201520018-0"

"APPROVED FOR RELEASE: 08/09/2001 CIA-RDP86-00513R002201520018-0

1/2 013 UNCLASSIFIED PROCESSING DATE--02OCT70

TITLE--STRUCTURE OF THE SEDIMENTARY STRATA AND THE EARTH'S CRUST IN THE SOUTHWESTERN AND CENTRAL PACIFIC FROM THE SEISMIC STUDIES -U-

AUTHOR--KOVYLIN, V.M.

COUNTRY OF INFO--USSR, PACIFIC OCEAN

SOURCE--OKEANOLOGIYA, 1970, VOL 10, NR 2, PP 287-300

DATE PUBLISHED--------70

SUBJECT AREAS--EARTH SCIENCES AND OCEANOGRAPHY, MECH., IND., CIVIL AND MARINE ENGR

TOPIC TAGS--EARTH CRUST, SEISMIC SOUNDING, SEISMIC REFRACTION, SEDIMENTARY ROCK, MOHOROVICIC DISCONTINUITY, OCEAN/(U)VITYAZ OCEANOGRAPHIC SHIP

CONTROL MARKING--NO RESTRICTIONS

DOCUMENT CLASS--UNCLASSIFIED

PROXY REEL/FRAME--1990/1316 STEP NO--UR/0213/70/010/002/0287/0300

CIRC ACCESSION NO--AP0109400

UNCLASSIFIED

APPROVED FOR RELEASE: 08/09/2001 CIA-RDP86-00513R002201520018-0"

"APPROVED FOR RELEASE: 08/09/2001 CIA-RDP86-00513R002201520018-0

2/2 013 UNCLASSIFIED PROCESSING DATE--02OCT70

CIRC ACCESSION NO--AP0109400

ABSTRACT/EXTRACT--(U) GP-0- ABSTRACT. SEISMIC STUDIES IN THE PACIFIC OCEAN WERE CARRIED OUT ON THE 37TH CRUISE OF THE R-V VITYAZ. THE SEISMIC REFRACTION METHOD WAS USED TO DETERMINE THE STRUCTURE OF SEDIMENTARY STRATA AT NUMEROUS STATIONS IN THE SOUTHWESTERN AND CENTRAL PARTS OF THE PACIFIC OCEAN. THE RESULTS OBTAINED BY THIS METHOD WERE COMPARED WITH THOSE YIELDED BY THE DEEP SEISMIC SOUNDING. THE COMPARISON GAVE MOST VALUABLE INFORMATION ABOUT THE STRUCTURE OF THE SECOND LAYER SHOWING IT AS HIGHLY INHOMOGENEOUS AND IRREGULAR. THIS LAYER CAN BE TRACED OVER THE WHOLE OF THE PACIFIC OCEAN AREA. THE SECOND LAYER SHOULD MORE CORRECTLY BE CALLED THE ABOVE BASALTIC LAYER OF THE OCEANIC CRUST. THE DEEP SEISMIC SOUNDING HELPED TO REVEAL THE STRUCTURE OF THE EARTH'S CRUST IN THE VICINITY OF THE COOK ISLE AND MURRAY FRACTURE ZONE. ALL THE PROFILES SHOW THE EXISTENCE OF THE SECOND LAYER. THE DATA FROM THE MURRAY FRACTURE ZONE CHARACTERIZE THE BASALTIC LAYER AND THE MOHO BOUNDARY. FACILITY: INSTITUT OKEANOLOGII IM. P. P. SHIRSHOVA AN SSSR.

UNCLASSIFIED

APPROVED FOR RELEASE: 08/09/2001 CIA-RDP86-00513R002201520018-0"

"APPROVED FOR RELEASE: 08/09/2001 CIA-RDP86-00513R002201520018-0

1/2 014 UNCLASSIFIED PROCESSING DATE--23OCT70

TITLE--NEW DATA ON THE STRUCTURE OF THE EARTH'S CRUST AND SEDIMENTARY STRATA IN THE CENTRAL PART OF THE ARABIAN BASIN -U-

AUTHOR--KOVYLIN, V.M.

COUNTRY OF INFO--USSR

SOURCE--OKEANOLOGIYA, 1970, VOL 10, NR 3, PP 457-461

DATE PUBLISHED--------70

SUBJECT AREAS--EARTH SCIENCES AND OCEANOGRAPHY, MECH., IND., CIVIL AND MARINE ENGR

TOPIC TAGS--EARTH CRUST, SEDIMENTARY ROCK LAYER, SEISMIC SOUNDING/(U)VITYAZ OCEANOGRAPHIC SHIP

CONTROL MARKING--NO RESTRICTIONS

DOCUMENT CLASS--UNCLASSIFIED

PROXY REEL/FRAME--3002/1865 STEP NO--UR/0213/70/010/003/0457/0461

CIRC ACCESSION NO--AP0129225

UNCLASSIFIED

APPROVED FOR RELEASE: 08/09/2001 CIA-RDP86-00513R002201520018-0"

"APPROVED FOR RELEASE: 08/09/2001 CIA-RDP86-00513R002201520018-0

2/2 014 UNCLASSIFIED PROCESSING DATE--23OCT70

CIRC ACCESSION NO--AP0129225

ABSTRACT/EXTRACT--(U) GP-0- ABSTRACT. SEISMIC PROFILING IN THE CENTRAL PART OF THE ARABIAN BASIN WAS CARRIED OUT ON THE 40TH CRUISE OF THE R.V VITYAZ OF THE INSTITUTE OF OCEANOLOGY, USSR ACADEMY OF SCIENCES. THE REFLECTION PROFILING HAS YIELDED DATA ON THE STRUCTURE OF SEDIMENTARY STRATA. THE THICKNESS OF SEDIMENTS HAS BEEN FOUND TO RANGE FROM 1.5 TO 1.8 KM. THE DEEP SEISMIC SOUNDING HAS REVEALED A BASALTIC LAYER OF THE EARTH'S CRUST BENEATH THE SEDIMENTS WITH THE BOUNDARY VELOCITY OF 6.5 TO 6.9 KM,SEC. FACILITY: INSTITUT OKEANOLOGII IM. P. P. SHIRSHOVA AN SSSR.

UNCLASSIFIED

APPROVED FOR RELEASE: 08/09/2001 CIA-RDP86-00513R002201520018-0"

"APPROVED FOR RELEASE: 08/09/2001 CIA-RDP86-00513R002201520018-0

USSR UDC 621.357.7:669.65'5

KOVYLYAYEVA, L. I., and PRATUSEVICH, YE. P.

"Electrolytic Plating of Tin-Zinc Alloy"

Elektron. tekhnika. Nauch.-tekhn. sb. Tekhnol., organiz., proiz-va i oborud. (Electronic Technology. Collection of Scientific Research Papers on Technology and Organization of Industrial Production and Equipment), Vyp 2(50), 1972, pp 57-62 (from Referativnyy Zhurnal -- Khimiya, Svodnyy Tom, No 23(II), 1972, Abstract No 23L261)

Translation: Comparative data are presented on plating the Sn-Zn alloy from different electrolytes. Suggestions are presented for the preparation of Sn-Zn alloy and of stable ammonium pyrophosphate electrolyte. The oxidation of Sn^{+2} into Sn^{+4} is prevented by the addition of 5-10 g of hydrazine sulfate and 2-4 ml. of 50% ethylenamine per liter of the electrolyte.

1/1

APPROVED FOR RELEASE: 08/09/2001 CIA-RDP86-00513R002201520018-0"

"APPROVED FOR RELEASE: 08/09/2001 CIA-RDP86-00513R002201520018-0

USSR

UDC 621.357.7:669.65'5(088.8)

KOVYLYAYEVA, L. I., PRATUSEVICH, YE. P.

"Method of Electrolytic Deposition of Tin-Zinc Alloy"

USSR Author's Certificate No 308099, filed 30 Oct 69, published 26 Aug 71 (from RZh-Khimiya, No 6 (II), Jun 72, Abstract No 6L317P)

Translation: A procedure was patented for electrolytic deposition of Sn-Zn alloy distinguished by the fact that in order to increase the corrosion resistance of the alloy, hydrazine sulfate, ethylenediamine and the Progress wetting agent with the following component ratio are introduced into the electrolyte: (in grams/liter): 28-40 $SnCl_2$, 140-150 $K_4P_2O_7$, 5-6 ZnO, 100-110 NH_4Cl, 0.5-1.0 gelatin, 5-10 hydrazine sulfate, 2-4 ethylenediamine (50% aqueous solution), 1-3 mℓ/liter of Progress wetting agent. The process takes place with a pH of 7.5-8.5, D_c of 1-5 a/dm^2 and at a temperature of 18-25°. The deposits of the alloy are semilustrous, fine crystalline, silver-white color. The alloy deposits are stable with respect to composition for a prolonged operating time of the electrolyte and do not in practice depend on D_c or the Sn concentration in the electrolyte within the recommended limits. The Zn content in the alloy is 18-22%, and the Sn content is 78-82%. The alloy has high corrosion resistance and is characterized by a prolonged capacity for soldering with an alcohol-rosin flux.

1/1

APPROVED FOR RELEASE: 08/09/2001 CIA-RDP86-00513R002201520018-0"

"APPROVED FOR RELEASE: 08/09/2001 CIA-RDP86-00513R002201520018-0

UDC 547.242

USSR

GATILOV, YU. F., IONOV, L. B., MOLODTSOV, S. S., and KONYPZINA, Y. P., Kazan' State Pedagogical Institute

"The Question of the Stereochemistry of Arsinous Acids"

Leningrad, Zhurnal Obshchey Khimii, Vol 42 (104), No 9, Sep 72, pp 1959-1961

Abstract: It was shown that the rearrangement of the enantiomers of tertiary arsine oxides due to the action of methyl iodide leads to the isolation of enantiomers of corresponding arsinous acid esters. Investigation of this rearrangement -- a process occuring by the S_N2 mechanism -- by the differential thermal analysis showed that the inversion of relative configuration took place.

1/1

APPROVED FOR RELEASE: 08/09/2001 CIA-RDP86-00513R002201520018-0"

"APPROVED FOR RELEASE: 08/09/2001 CIA-RDP86-00513R002201520018-0

USSR UDC 621.382:535.376

GOFSHTEYN-GARDT, A.L., KOVYREVA, N.I., KOGAN, L.M., KULAGIN, L.N., KURLYAND, B.I., TIN'KOV, A.P., TRUSHINA, V.YE.

"Semiconductor Light Source (Light-Emitting Diode) Of Gallium Phosphide"

V sb. Poluprovodn. pribory i ikh primeneniye (Semiconductor Devices And Their Application--Collection Of Works), Issue 4, Moscow, "Sov.radio," 1972, pp 3-14 (from RZh:Elektronika i yeye primeneniye, No 9, Sept 1972, Abstract No 9B310)

Translation: The results are discussed of the development and an investigation of the electrical and optical characteristics of gallium phosphide red-radiation light-emitting diodes. The method of creation of p-n structures and the design of the light-emitting diode are described. The principal areas of application of the light-emitting diodes are considered. The devices described are characterized by a quantum efficiency of radiation of 0.1--1 percent. 11 ill. 1 tab. 19 ref. Author's abstract.

1/1

APPROVED FOR RELEASE: 08/09/2001 CIA-RDP86-00513R002201520018-0"

"APPROVED FOR RELEASE: 08/09/2001 CIA-RDP86-00513R002201520018-0

USSR

UDC 621.822.7

KOVYRSHIN, O. N., Research Student

"Device for Experimental Study of Friction in Miniature Ball Bearings in Aggressive Gas Media"

Moscow, Izvestiya vysshikh uchebnykh zavedeniy — Mashinostroveniye, No 7, 1971, pp 51-56

Abstract: A procedure developed by the author for contactless oscillographing of very small static and kinetic friction moments in miniature ball bearings operating in aggressive gaseous media and the device proposed for implementation of this procedure are presented. The mechanical and optical-photoelectric systems of the device, means of obtaining aggressive gaseous media and the pendulum suspension for studying the effect of the aggressive gaseous media on the static moment of friction in the ball bearings are discussed on the basis of the schematics presented. The formulas and sample calculations of the friction moments from experimental results are given. The device permits the static moment of friction to be oscillographed in the case of discrete successive variation of the angle of rotation of a pin, an important feature when evaluating bearings as sensor elements. The example oscillograms of the starting (static) moment of friction show that with variation of the angle of

1/2

APPROVED FOR RELEASE: 08/09/2001 CIA-RDP86-00513R002201520018-0"

"APPROVED FOR RELEASE: 08/09/2001 CIA-RDP86-00513R002201520018-0

USSR

KOVYRSHIN, O. N., Izvysshikh uchebnykh zavedeniy -- Mashinostroyeniye, No 7, 1971, pp 51-56

inclination of the plane with the pendulum suspension the angle of deviation of the pendulum increases, and at some value the pendulum "breaks" and returns to the initial position. For the experiment performed the value of the starting moment of friction $M_{friction}$ corresponding to the maximum ordinate of the $M_{friction} = f(t)$ curve is quite close to the approximate values of industrial tests.

2/2

APPROVED FOR RELEASE: 08/09/2001 CIA-RDP86-00513R002201520018-0"

"APPROVED FOR RELEASE: 08/09/2001 CIA-RDP86-00513R002201520018-0

1/2 008 UNCLASSIFIED PROCESSING DATE--13NOV70

TITLE--SYNTHESIS OF 4,PHENOXYBIPHENYL -U-

AUTHOR-(04)-BARONI, YE.YE., KAREGISHVILI, L.I., KOVYRZINA, K.A., RADAIKINA, L.A.
COUNTRY OF INFO--USSR

SOURCE--ZH. PRIKL. KHIM. (LENINGRAD) 1970, 43(3), 719-20

DATE PUBLISHED--------70

SUBJECT AREAS--CHEMISTRY

TOPIC TAGS--CHEMICAL SYNTHESIS, BENZENE DERIVATIVE, OXYGEN COMPOUND, POLYNUCLEAR HYDROCARBON

CONTROL MARKING--NO RESTRICTIONS

DOCUMENT CLASS--UNCLASSIFIED
PROXY REEL/FRAME--1992/0341 STEP NO--UR/0080/70/043/003/0719/0720

CIRC ACCESSION NO--AP0111535
UNCLASSIFIED

APPROVED FOR RELEASE: 08/09/2001 CIA-RDP86-00513R002201520018-0"

"APPROVED FOR RELEASE: 08/09/2001 CIA-RDP86-00513R002201520018-0

2/2 008 UNCLASSIFIED PROCESSING DATE--13NOV70

CIRC ACCESSION NO--AP0111535

ABSTRACT/EXTRACT--(U) GP-0- ABSTRACT. ADDING 4.8 ML HNO SUB3 (D. 1.4) OVER 70 MIN TO A MIXT. OF 38.5 G PH SUB2, 100 ML HOAC, 31.8 G IODINE, AND 27.5 ML H SUB2 SO SUB4 (D. 1.84) AT 34-6DEGREES GAVE 54PERCENT 4,PHC SUB6 H SUB4 I (I), M. 112DEGREES (ETOH). REACTION OF 70 G I WITH KOPH (FROM 45.5 G PHOH AND 15.4 G KOH) 6 HR IN THE PRESENCE OF 1.5 G POHD. CU AT 270-90DEGREES GAVE 97PERCENT 4,PHOC SUB6 H SUB4 PH (II), B SUB2 160DEGREES, M. 68-9DEGREES. COM. FEASIBLE PREPN. OF II FROM PHBR AND 4,PHC SUB6, H SUB4 OH (III) WAS STUDIED WITH RESPECT TO REACTANT RATIO AND REACTION TIME AND TEMP. II YIELDS WERE MAX. (89.2PERCENT) WHEN 25 G III, 12 G KOH, 0.75 G CU, AND 40 ML PHBR WAS HEATED FIRST AT 180DEGREES UNDER A DEPHLEGMATOR 2.5 HR WITH DISTN. OF H SUB2 O FORMED IN THE REACTION AND THEN 1.5 HR AT 300DEGREES; THE MIXT., COOLED TO 50DEGREES, WAS TREATED WITH 50 ML AQ. 20PERCENT KOH, AND THE FILTERED, WASHED, DRIED PRODUCT WAS VACUUM DISTD. FACILITY: SUKHUM. FIZ.-TEKH. INST., SUKHUMI, USSR.

UNCLASSIFIED

APPROVED FOR RELEASE: 08/09/2001 CIA-RDP86-00513R002201520018-0"

"APPROVED FOR RELEASE: 08/09/2001 CIA-RDP86-00513R002201520018-0

Organometallic Compounds

UDC: 547.242

USSR

GATILOV, Yu. F., KOVYRZINA, V. P., KRALICHKINA, M. G., Kazan' Pedagogical Institute

"On the Question of Thermal Behavior of Quasiarsonium Salts"

Leningrad, Zhurnal Obshchey Khimii, Vol 42(104), No 6, Jun 72, pp 1303-1305

Abstract: The authors isolate a series of quasiarsonium salts -- intermediate products of rearrangement of tertiary arsine sulfides -- and show that when they are heated they are readily converted to esters of the corresponding thioarsinous acids. It is found that quasiarsonium salts behave differently when heated, depending on their melting point. An analysis of the results of the thermal study confirms the previously assumed $S_N i$ mechanism of rearrangement.

1/1

APPROVED FOR RELEASE: 08/09/2001 CIA-RDP86-00513R002201520018-0"

"APPROVED FOR RELEASE: 08/09/2001 CIA-RDP86-00513R002201520018-0

USSR UDC 547.242

GATILOV, Yu. F., and KOVYRZINA, N. P., Kazan' State Pedagogical Institute

"The Mechanism of Rearrangement of Arsenic Dialkylarylsulfides"

Leningrad, Zhurnal Obshchey Khimii, Vol 41 (103), No 3, Mar 71, pp 567-569

Abstract: Differential-thermal curve of diethylphenylarsinesulfide exhibits two exo-effects, pointing to the formation of two products in its rearrangement. The following mechanism is proposed: the arsenic atom in tertiary arsine sulfides carries a partial positive charge due to which the α-carbon atom of the ethyl radical becomes labile. On heating this effect increases, leading to eventual formation of ethylphenylthioarsenic acid anion and a carbonium cation. The second exo-effect is due to the formation of ethyl thioether of ethylphenylarsenic acid.

1/1

APPROVED FOR RELEASE: 08/09/2001 CIA-RDP86-00513R002201520018-0"

"APPROVED FOR RELEASE: 08/09/2001 CIA-RDP86-00513R002201520018-0

USSR UDC 547.242

GATILOV, Yu. F., and KOVYRZINA, V. P., Kazan' State Pedagogical Institute

"The Mechanism of Rearrangement of Arsenic Dialkylarylsulfides"

Leningrad, Zhurnal Obshchey Khimii, Vol 41 (103), No 3, Mar 71, pp 567-569

Abstract: Differential-thermal curve of diethylphenylarsinesulfide exhibits two exo-effects, pointing to the formation of two products in its rearrangement. The following mechanism is proposed: the arsenic atom in tertiary arsine sulfides carries a partial positive charge due to which the α-carbon atom of the ethyl radical becomes labile. On heating this effect increases, leading to eventual formation of ethylphenylthioarsenic acid anion and a carbonium cation. The second exo-effect is due to the formation of ethyl thioether of ethylphenylarsenic acid.

1/1

APPROVED FOR RELEASE: 08/09/2001 CIA-RDP86-00513R002201520018-0"

"APPROVED FOR RELEASE: 08/09/2001 CIA-RDP86-00513R002201520018-0

USSR UDC: 621.372.41.01-501.22

KOVZAN, A. A., MOROZOVA, R. A.

"Analysis of Type K Reactive Filters Loaded by a Fixed Resistance"

Tr. Mosk. aviats. in-ta (Works of the Moscow Aviation Institute), 1970, vyp. 220, pp 129-135 (from RZh-Radiotekhnika, No 5, May 71, Abstract No 5A107)

Translation: A condition is derived for signal transmission through a type K reactive iteration filter with Chebyshev characteristic of the insertion loss in the passband. Characteristic functions are found for a symmetric and an asymmetric filter. Three illustrations, bibliography of four titles. N. S.

1/1

APPROVED FOR RELEASE: 08/09/2001 CIA-RDP86-00513R002201520018-0"

"APPROVED FOR RELEASE: 08/09/2001 CIA-RDP86-00513R002201520018-0

USSR

UDC: 535.243

GVERDTSITELI, T. A., SHARIKADZE, A. P., CHARUYEY, N. G., KOVZCHASHVILI, U. A.,
Scientific Research Institute of Automation of Production Processes in Industry

"A Photometer"

Moscow, Otkrytiya, Izobreteniya, Promyshlennyye Obraztsy, Tovarnyye Znaki, No 7, Mar 72, Author's Certificate No 329408, Division G, filed 15 Jun 70, published 9 Feb 72, p 161

Translation: This Author's Certificate introduces a photometer containing two radiation sources with two light filters, a modulator, a commutator, three photoreceivers, amplifiers, and a registration module. Two of the photoreceivers produce commutating signals. As a distinguishing feature of the patent, the sensitivity of measurements is improved by introducing integral interrupters into the circuit for registration of the intensity of the working and comparison signals. The interrupters operate in the line switch mode, and their control elements are connected to the outputs of the commutating signal amplifiers. These integral interrupters are connected to alternating current sources in parallel with storage capacitors.
1/2

APPROVED FOR RELEASE: 08/09/2001 CIA-RDP86-00513R002201520018-0"

"APPROVED FOR RELEASE: 08/09/2001 CIA-RDP86-00513R002201520018-0

USSR

GVERDTSITELI, T. A., USSR Author's Certificate No 329408

Two slots are made in the commutating disc. These slots are no longer than the diameter of the light filters, and are located at different distances from the center of the disc.

2/2

APPROVED FOR RELEASE: 08/09/2001 CIA-RDP86-00513R002201520018-0"

"APPROVED FOR RELEASE: 08/09/2001 CIA-RDP86-00513R002201520018-0

1/2 013 UNCLASSIFIED PROCESSING DATE--30OCT70

TITLE--IMPARTING COLOR TO COPOLYMER AND FIBERS BASED ON POLYACRYLONITRILE -U-

AUTHOR-(05)-KOVZHIN, L.A., KIRPICHENKO, T.R., GLAZOMITSKIY, K.L., ROSKIN, YE.S., KHARKHAROV, A.A.

COUNTRY OF INFO--USSR

SOURCE--IZV. VYSSH. UCHEB. ZAVED., KHIM. KHIM. TEKHNOL. 1970, 13(1), 109-12

DATE PUBLISHED--------70

SUBJECT AREAS--MATERIALS

TOPIC TAGS--DYE, COPOLYMER, POLYACRYLONITRILE FIBER, ACRYLATE, AMIDE

CONTROL MARKING--NO RESTRICTIONS

DOCUMENT CLASS--UNCLASSIFIED

PROXY REEL/FRAME--2000/0975 STEP NO--UR/0153/70/013/001/0109/0112

CIRC ACCESSION NO--AP0124634

UNCLASSIFIED

APPROVED FOR RELEASE: 08/09/2001 CIA-RDP86-00513R002201520018-0"

"APPROVED FOR RELEASE: 08/09/2001 CIA-RDP86-00513R002201520018-0

UNCLASSIFIED PROCESSING DATE--30OCT70

2/2 013

CIRC ACCESSION NO--AP0124634

ABSTRACT/EXTRACT--(U) GP-0- ABSTRACT. ACRYLONITRILE METHYLOLMETHACRYLAMIDE COPOLYMER (I) WAS DYED WITH H SUB2 O SOL. DYES DURING THE COPOLYMN. OF THE RESP. MONOMERS IN AN. NASCN SOLN. DYED I EXHIBITED EXCELLENT LIGHT FASTNESS (COMPARABLE TO THAT OBTAINED BY DYEING POLYMER FIBERS WITH FIBER REACTIVE DYES). THE PHYSICOMECH. PROPERTIES OF DYED I FIBER WERE ESSENTIALLY UNCHANGED. AN EFFECTIVE TECHNIQUE WAS DEVELOPED FOR THE RECOVERY OF DYES FROM THE SETTING BATH.

FACILITY: LENINGRAD. INST. TEKST. LEGK. PROM. IM. KIROVA, LENINGRAD, USSR.

UNCLASSIFIED

APPROVED FOR RELEASE: 08/09/2001 CIA-RDP86-00513R002201520018-0"

"APPROVED FOR RELEASE: 08/09/2001 CIA-RDP86-00513R002201520018-0

Acc. Nr: AP0044143 Ref. Code: UR 0244

PRIMARY SOURCE: Voprosy Pitaniya, 1970, Vol 29, Nr 1, pp 7-9

GASTRIC SECRETION WITH DIFFERENT TIMING OF QUALITATIVELY DISSIMILAR FOOD INGESTION AND APPLICATION OF PHYSICAL LOADS

Z. Z. Kovziridze (Tbilisi)

Summary

Tests conducted on dogs brought evidence that a static physical load applied 30 and 60 minutes after food ingestion depressed gastric secretion. The intake of pre-eminently fatty, mixed and carbohydrate-rich food was seen to produce a particularly strong inhibitive action. Physical load applied 90—120 minutes following ingestion of food did not affect gastric secretion. A relatively mild depressive effect of physical load was noted to occur after intake of predominantly protein-rich food.

1/1

REEL/FRAME
19770624

2

APPROVED FOR RELEASE: 08/09/2001 CIA-RDP86-00513R002201520018-0"

"APPROVED FOR RELEASE: 08/09/2001 CIA-RDP86-00513R002201520018-0

1/2 023 UNCLASSIFIED PROCESSING DATE--11DEC70

TITLE--SINTERING OF A SILICON TITANIUM CONCENTRATE FROM THE YAREGA DEPOSIT WITH SODIUM FLUOROSILICATE -U-

AUTHOR-(03)-DELIMARSKIY, YU.K., CHERNOV, R.V., KOVZUN, I.G.

COUNTRY OF INFO--USSR

SOURCE--ZH. PRIKL. KHIM. (LENINGRAD) 1970, 43 (5), 1008-15

DATE PUBLISHED--------70

SUBJECT AREAS--EARTH SCIENCES AND OCEANOGRAPHY, MATERIALS

TOPIC TAGS--MELTING POINT, CHEMICAL COMPOSITION, SILICON, TITANIUM, MINERAL DEPOSIT, GEOGRAPHIC LOCATION, SILICATE, FLUORIDE, SINTERING FURNACE

CONTROL MARKING--NO RESTRICTIONS

DOCUMENT CLASS--UNCLASSIFIED

PROXY REEL/FRAME--3004/0957 STEP NO--UR/0080/70/043/005/1008/1015

CIRC ACCESSION NO--AP0131542

UNCLASSIFIED

APPROVED FOR RELEASE: 08/09/2001 CIA-RDP86-00513R002201520018-0"

"APPROVED FOR RELEASE: 08/09/2001 CIA-RDP86-00513R002201520018-0

UNCLASSIFIED PROCESSING DATE--11DEC70

2/2 023

CIRC ACCESSION NO--AP0131542

ABSTRACT/EXTRACT--(U) GP-0- ABSTRACT. THE EFFECTS OF THE PARTICLE SIZE DISTRIBUTION OF THE CONC., THE TEMP., THE CHEM. COMPN. OF THE STARTING MIXT., AND THE PRESSURE OF THE GASEOUS SIF SUB4 ON THE SINTERING PROCESS WERE STUDIED. THE EQUIL. PRESSURE OF SIF SUB4 OVER A MIXT. OF THE CONC. AND NA SUB2 SIF SUB6 INCREASES SHARPLY AS COMPARED TO THE PRESSURE OVER PURE NA SUB2 SIF SUB6 AT EQUAL TEMP. INTRODUCTION OF SUBSTANCES INTO THE REACTION MIXT. WHICH DECREASE THE M.P. EXERTS A POS. EFFECT ON THE DEGREE OF INTERACTION OF THE COMPONENTS. FACILITY: INST. OBSHCH. NEORG. KHIM., KIEV, USSR.

UNCLASSIFIED

APPROVED FOR RELEASE: 08/09/2001 CIA-RDP86-00513R002201520018-0"

"APPROVED FOR RELEASE: 08/09/2001 CIA-RDP86-00513R002201520018-0

1/2 006 UNCLASSIFIED PROCESSING DATE--30OCT70

TITLE--DETERMINATION OF BIURET IN COMPLEX FERTILIZERS -U-

AUTHOR-(02)-MAKAREVICH, V.M., KOYANDER, A.YE.

COUNTRY OF INFO--USSR

SOURCE--AGROKHIMIYA, 1970, 1, 139-43

DATE PUBLISHED--------70

SUBJECT AREAS--AGRICULTURE, CHEMISTRY

TOPIC TAGS--UREA DERIVATIVE, COMPLEX FERTILIZER, CHEMICAL ANALYSIS

CONTROL MARKING--NO RESTRICTIONS

DOCUMENT CLASS--UNCLASSIFIED

PROXY REEL/FRAME--1995/0444 STEP NO--UR/0435/70/000/001/0139/0143

CIRC ACCESSION NO--AP0116110

UNCLASSIFIED

APPROVED FOR RELEASE: 08/09/2001 CIA-RDP86-00513R002201520018-0"

"APPROVED FOR RELEASE: 08/09/2001 CIA-RDP86-00513R002201520018-0

2/2 006 UNCLASSIFIED PROCESSING DATE--30OCT70

CIRC ACCESSION NO--AP0116110

ABSTRACT/EXTRACT--(U) GP-0- ABSTRACT. THE COMMONLY USED METHOD FOR DETN. OF BIURET BY REACTION WITH CU SALTS IN ALK. SOLNS. CAN NOT BE USED FOR ANAL. OF COMPLEX FERTILIZERS CONTG. LARGE AMOUNTS OF NH SUB4 PRIME POSITIVE, CA PRIME2 POSITIVE, MG PRIME2 POSITIVE, K PRIME POSITIVE, FE PRIME3 POSITIVE, NO SUB3 PRIME NEGATIVE, SO SUB4 PRIME2 NEGATIVE, PO SUB4 PRIME3 NEGATIVE, AND CL PRIME NEGATIVE. THEREFORE, A METHOD WAS DEVELOPED FOR DETN. OF BIURET ON THE BASIS OF THE FORMATION OF A YELLOW COMPLEX WITH NI. THE SAMPLE OF FERTILIZER (10 G) WAS DISSOLVED IN DISTD. WATER AND MADE UP TO 500 ML. THE SOLN. WAS THOROUGHLY MIXED AND FILTERED, AND 15 ML OF FILTRATE WAS TRANSFERRED INTO A 50 ML VOLUMETRIC FLASK. THEN 5 ML OF ALK. NITARTRATE REAGENT (1 TO 1 SOLNS. OF 1.36 G NISO SUB4. 7H SUB2 O,500 ML AND 133 G NAOH PLUS 137 G NA-K TARTRATE,500 ML OF H SUB2 O) AND 5 ML 10PERCENT (SATD.) NA SUB4 P SUB2 O SUB7 WERE ADDED AND THE FLASK WAS KEPT FOR 30 MIN IN A WATER BATH AT 72-75DEGREES. AFTER COOLING TO ROOM TEMP. AND DILG. WITH DISTD. WATER, THE ABSORBANCE WAS DETD. AT 265 M MU. THE CONTENT OF BIURET WAS READ FROM STANDARD CURVES. FACILITY: NAUCH-ISSLED. INST. UOOBRINSEKTOFUNGITIS, MOSCOW, USSR.

UNCLASSIFIED

APPROVED FOR RELEASE: 08/09/2001 CIA-RDP86-00513R002201520018-0"

"APPROVED FOR RELEASE: 08/09/2001 CIA-RDP86-00513R002201520018-0

AT0032095

NUCLEAR SCI. ABST. 1-70 UR 0000

K

6511 (NP-tr-1862) SOME ASPECTS OF HEATING A PLASMA BY A STRAIGHT DISCHARGE CURRENT. Kovdan, V. S.; Papyrin, A. N.; Ponomarenko, A. G.; [illegible] (Akademiya Nauk SSSR, Novosibirsk, [illegible]). Translated for Culham Lab., Abingdon, Eng., [illegible] No. 241. 10p. (CTO-655). Dep. CFSTI C., S. Sales Only).

New experimental results on the turbulent heating of plasma by the current of a straight discharge are reported. It is shown that for different current shapes the potential drop in the plasma column is concentrated in a region of [illegible] cm and may move along the discharge gap. The maximum anomalous resistivity and gap voltage coincide with the instant of the abrupt drop of the current, and this moment coincides with the return electron current to the cathode. The onset of turbulence is characterized by a spreading of the plasma column to the chamber walls. Possible causes of the observed effects are suggested. (auth)

21

19700281

APPROVED FOR RELEASE: 08/09/2001 CIA-RDP86-00513R002201520018-0"

"APPROVED FOR RELEASE: 08/09/2001 CIA-RDP86-00513R002201520018-0

USSR UDC 681.326.36

KOYEKIN, A. I., CHICHERIN, Yu. Ye.

"A Logic Device With Standby Provisions"

Moscow, Otkrytiya, izobreteniya, promyshlennyye obraztsy, tovarnyye znaki, 1970, No 35, Soviet Patent No 287113, class 21, filed 21 Feb 69, published 19 Nov 70, p 62

Translation: This Author's Certificate introduces a logic device with standby provisions based on AND-NOT/OR-NOT elements. The device contains a combination logic circuit with standby provision, and a flip-flop with standby provision. As a distinguishing feature of the patent, the reliability of the device is improved and speed is increased by connecting the direct information outputs of the first channel of the combination circuit to the set terminal of the flip-flop in the first channel, while the inverse information outputs of the second channel of the combination circuit are connected to the reset terminals of this same flip-flop. The inverse information outputs of the third channel of the combination circuit are connected to the reset terminal of the flip-flop in the second channel. The inverse information outputs of the combination circuit are joined together in a majority hook-up and connected to the set terminal of the flip-flop in the

1/2

APPROVED FOR RELEASE: 08/09/2001 CIA-RDP86-00513R002201520018-0"

"APPROVED FOR RELEASE: 08/09/2001 CIA-RDP86-00513R002201520018-0

USSR

KOYEKIN, A. I., CHICHERIN, Yu. Ye., Otkrytiya, izobreteniya, promyshlennyye obraztsy, tovarnyye znaki, 1970, No 35, Soviet Patent No 287113, class 21, filed 21 Feb 69, published 19 Nov 70, p 62

second channel. The direct controlling outputs of the combination circuit are connected to the set terminal of the flip-flop in the first channel, to the reset terminal of the flip-flop in the first channel and the set terminal of the flip-flop in the second channel, and to the reset terminal of the flip-flop in the second channel respectively. The inverse controlling outputs of each channel in the combination circuit are joined together in an AND-NOT circuit and connected to the set terminals of the second control stage of the flip-flops in the first and second channels, to the reset terminal of the second control stage of the flip-flop in the first channel and the set terminal of the second control stage of the flip-flop in the second channel, and to the reset terminals of the second control stage of the flip-flops in the first and second channels respectively.

2/2

APPROVED FOR RELEASE: 08/09/2001 CIA-RDP86-00513R002201520018-0"

"APPROVED FOR RELEASE: 08/09/2001 CIA-RDP86-00513R002201520018-0

USSR UDC: 51.621.391

KOYFMAN, A. A.

"Calculating the Reliability of Computer Facilities by the Method of Statistical Modeling With the Use of Localized Redundancy and Rearrangement"

V sb. Veroyatnostn. avtomaty i ikh primeneniye (Probabilistic Automata and Their Use--collection of works), Riga, "Zinatne", 1971, pp 207-211 (from RZh-Kibernetika, No 9, Sep 71, Abstract No 9V436)

Translation: The paper deals with problems of determining the reliability index of computer facilities by statistical modeling on a digital computer. Author's resumé.

1/1

APPROVED FOR RELEASE: 08/09/2001 CIA-RDP86-00513R002201520018-0"

"APPROVED FOR RELEASE: 08/09/2001 CIA-RDP86-00513R002201520018-0

USSR UDC 621.382.2

KLIMKOVA, O.A., KOYFMAN, A.I., NIYAZOVA, O.R.

"Effect Of Radiation-Stimulated Diffusion Of Gold On Stability Of Silicon Diodes"

V sb. Radiats. fiz. nemet. kristallov (Radiation Physics Of Nonmetallic Crystals-Collection Of Works), Vol 3, Part 2, Kiev, "Nauk.dumka," 1971, pp 185-193 (from RZh--Elektronika i yeye primeneniye, No 10, October 1971, abstract No 10B56)

Translation: The paper studies diffusion, stimulated by Roentgen and γ-neutron irradiation, of Au into Si doped with P, with a resistivity of 150-200 ohm.cm and 7-20 ohm.cm, and also the change of the parameters of semiconductor devices with the introduction of Au into the volume of the semiconductor. The impurity profile of Au after radiated-stimulated diffusion was established by the γ-radiation of the isotope ^{198}Au (0.411 Mev) on a γ-spectrometer for the successively etched layers of Si. It was found that the stimulated diffusion of Au into Si at a temperature of 20° C ($D = 10^{-12}$ cm^2/sec with Roentgen irradiation; $D = 10^{-11}$ -- 10^{-10} with γ-neutron irradiation) corresponds to thermal diffusion at a temperature of 400--500° C. Under the effect of irradiation, semiconductor devices with gold contacts disclose major changes of all characteristics as a result of the combined effect of diffusion and defect formation. 4 ill. 20 ref. I.M.

1/1

APPROVED FOR RELEASE: 08/09/2001 CIA-RDP86-00513R002201520018-0"

"APPROVED FOR RELEASE: 08/09/2001 CIA-RDP86-00513R002201520018-0

1/2 020 UNCLASSIFIED PROCESSING DATE--11SEP70

TITLE--TWO DIMENSIONAL NONLINEAR PROBLEMS CONCERNING THE ELASTIC EQUILIBRIUM OF MULTIPLY CONNECTED BODIES -U-

AUTHOR--KOYFMAN, YU.I.

COUNTRY OF INFO--USSR

SOURCE--PRIKLADNAIA MEKHANIKA, VOL. 6, FEB. 1970, P 58-65

DATE PUBLISHED--------70

SUBJECT AREAS--MECH., IND., CIVIL AND MARINE ENGR

TOPIC TAGS--ELASTICITY THEORY, STRESS CONCENTRATION, METAL COMPRESSIBILITY, EQUILIBRIUM CONSTANT, FLAT PLATE, HOLE IN STRUCTURE, BIBLIOGRAPHY/(U)MINSK22 COMPUTER

CONTROL MARKING--NO RESTRICTIONS

DOCUMENT CLASS--UNCLASSIFIED

PROXY REEL/FRAME--1988/1327 STEP NO--UR/0198/70/006/000/0058/0065

CIRC ACCESSION NO--AP0106104

UNCLASSIFIED

APPROVED FOR RELEASE: 08/09/2001 CIA-RDP86-00513R002201520018-0"

"APPROVED FOR RELEASE: 08/09/2001 CIA-RDP86-00513R002201520018-0

UNCLASSIFIED PROCESSING DATE--11SEP70

2/2 020

CIRC ACCESSION NO--AP0106104

ABSTRACT/EXTRACT--(U) GP-0- ABSTRACT. DERIVATION OF THE PRINCIPAL RELATIONS IN GENERAL TWO DIMENTIONAL NONLINEAR ELASTICIY THEORY FOR MULTIPLY CONNECTED BODIES. EXPRESSIONS FOR THE STRESS CONCENTRATION COEFFICIENTS IN PLATES AND BULKY ELEMENTS MADE FROM NONLENEARLY ELASTIC MATERIALS ARE PROPOSED. SOLUTIONS TO THE ELASTIC EQUILIBRIUM PROBLEM FRO A PLANE WITH TWO HOLES AND A PLANE WITH A PERIODIC SEQUENCE OF IDENTICAL HOLES WHICH REMAIN CIRCULAR IN THE STRESSED STATE ARE OBTAINED WITHIN THE FRAMEWORK OF SECOND ORDER THEORY. NONLENEAR GEOMETRIC AND PHYSICAL EFFECTS OF THE STRESS STRAIN STATE OF PLATES AND BULKY ELEMENTS MADE FROM COMPRESSIBLE AND INCOMPRESSIBLE MATERIALS ARE STUDIED FOR VARIOUS TYPES OF EXTERNAL LOADING. SOME RESULTS OBTAINED ON A MINSK22 COMPUTER ARE PRESENTED AND DISCUSSED.

UNCLASSIFIED

APPROVED FOR RELEASE: 08/09/2001 CIA-RDP86-00513R002201520018-0"

"APPROVED FOR RELEASE: 08/09/2001 CIA-RDP86-00513R002201520018-0

1/2 020 UNCLASSIFIED PROCESSING DATE--11SEP70

TITLE--TWO DIMENSIONAL NONLINEAR PROBLEMS CONCERNING THE ELASTIC EQUILIBRIUM OF MULTIPLY CONNECTED BODIES -U-

AUTHOR--KOYFMAN, YU.I.

K

COUNTRY OF INFO--USSR

SOURCE--PRIKLADNAIA MEKHANIKA, VOL. 6, FEB. 1970, P 58-65

DATE PUBLISHED--------70

SUBJECT AREAS--MECH., IND., CIVIL AND MARINE ENGR

TOPIC TAGS--ELASTICITY THEORY, STRESS CONCENTRATION, METAL COMPRESSIBILITY, EQUILIBRIUM CONSTANT, FLAT PLATE, HOLE IN STRUCTURE, BIBLIOGRAPHY/(U)MINSK22 COMPUTER

CONTROL MARKING--NO RESTRICTIONS

DOCUMENT CLASS--UNCLASSIFIED

PROXY REEL/FRAME--1988/1327 STEP NO--UR/0198/70/006/000/0058/0065

CIRC ACCESSION NO--AP0106104

UNCLASSIFIED

APPROVED FOR RELEASE: 08/09/2001 CIA-RDP86-00513R002201520018-0"

"APPROVED FOR RELEASE: 08/09/2001 CIA-RDP86-00513R002201520018-0

2/2 020 UNCLASSIFIED PROCESSING DATE--11SEP70

CIRC ACCESSION NO--AP0106104

ABSTRACT/EXTRACT--(U) GP-0- ABSTRACT. DERIVATION OF THE PRINCIPAL RELATIONS IN GENERAL TWO DIMENTIONAL NONLINEAR ELASTICIY THEORY FOR MULTIPLY CONNECTED BODIES. EXPRESSIONS FOR THE STRESS CONCENTRATION COEFFICIENTS IN PLATES AND BULKY ELEMENTS MADE FROM NONLENEARLY ELASTIC MATERIALS ARE PROPOSED. SOLUTIONS TO THE ELASTIC EQUILIBRIUM PROBLEM FRO A PLANE WITH TWO HOLES AND A PLANE WITH A PERIODIC SEQUENCE OF IDENTICAL HOLES WHICH REMAIN CIRCULAR IN THE STRESSED STATE ARE OBTAINED WITHIN THE FRAMEWORK OF SECOND ORDER THEORY. NONLENEAR GEOMETRIC AND PHYSICAL EFFECTS OF THE STRESS STRAIN STATE OF PLATES AND BULKY ELEMENTS MADE FROM COMPRESSIBLE AND INCOMPRESSIBLE MATERIALS ARE STUDIED FOR VARIOUS TYPES OF EXTERNAL LOADING. SOME RESULTS OBTAINED ON A MINSK22 COMPUTER ARE PRESENTED AND DISCUSSED.

UNCLASSIFIED

APPROVED FOR RELEASE: 08/09/2001 CIA-RDP86-00513R002201520018-0"

"APPROVED FOR RELEASE: 08/09/2001 CIA-RDP86-00513R002201520018-0

UDC 669.295-145.2

USSR

SOROKIN, I. P., BABICH, D. D., KUDRICHENKO, S. A., GLUSECHENKO, Zh. N., and KOYGUSHSKIY, N. N.

"On the Nature of Chlorine Contained in Electrolytic Titanium"

Moscow, Metallurgiya i Khimiya Titana (Institut Titana), Metallurgiya Publishing House, Vol 6, 1[illegible], pp 72-77

Translation: Data are given [illegible] the effect of hydroprocessing conditions and nature of the solvent on [illegible] chlorine in electrolytic titanium. A description [illegible] of research on the influence of gorups of tetrava[illegible] solutions, on the content of surface [illegible] statistical data on the content of chlori[illegible] considered. It is demonstrated that deposit[illegible] after hydroprocessing of cathode [illegible] of hydrolysis of titanium chlorides. [illegible]

APPROVED FOR RELEASE: 08/09/2001 CIA-RDP86-00513R002201520018-0"

"APPROVED FOR RELEASE: 08/09/2001 CIA-RDP86-00513R002201520018-0

USSR

UDC 669.295.054.79

ANTIPIN, L. N., DROZDENKO, V. A., KOYGUSHSKIY, N. N., OLESOV, Yu. G., USTINOV, V. S., ZAPADNYA, V. I., VOLYNSKIY, V. V., and KALUZHSKAYA, E. L.

"The Technology for Obtaining Powders by the Electrolysis Method for Liquid Metals With a Soluble Anode"

Moscow, Metallurgiya i Khimiya Titana (Institut Titana), Metallurgiya Publishing House, Vol 6, 1970, pp 85-89

Translation: A technological chart for producing powders of titanium and its alloys by the electrolysis method with a soluble anode is worked out. Opitmal technological conditions for obtaining powders by electrolysis are selected. The chart has been adopted for introduction. The titanium powders obtained do not differ, in impurity content, from the best grades of titanium sponge. The effect of electrolyte temperature on the qualities of the metal obtained and the chlorine content in it are studied. The metal obtained is undergoing testing by users. Two illustrations, two tables, and two bibliographic entries.

1/1

APPROVED FOR RELEASE: 08/09/2001 CIA-RDP86-00513R002201520018-0"

"APPROVED FOR RELEASE: 08/09/2001 CIA-RDP86-00513R002201520018-0

USSR

UDC 669.295.295.472

SOROKIN, I. P., BABICH, D. D., KUDRICHENKO, S. A., GLUSHCHENKO, Zh. N., and KOYGUSHSKIY, N. N.

"The Nature of the Chlorine Contained in Electrolytic Titanium"

Sb. tr. Vses. n.-i. i proyektn. in-t titana [Collected works of All-Union Scientific-Research and Planning Institute for Titanium], 6, 1970, 72-77, (Translated from Referativnyy Zhurnal-Metallurgiya, No. 1, 1971, Abstract No.1 G192 by the authors).

Translation: Data are presented on the influence of the conditions of hydrometallurgical processing and the nature of the solvent on the content of residual Cl in electrolytic Ti. Results are described from studies of the influence of complexes of Ti^{4+} contained in the working solutions on the content of surface and total Cl in Ti. Statistical data are analyzed on the content of Cl in electrolytic Ti. The residual Cl in electrolytic Ti after processing of cathode precipitate in a solution of HCl (1%) is not a product of hydrolysis of Ti chlorides. 5 tables.

1/1

APPROVED FOR RELEASE: 08/09/2001 CIA-RDP86-00513R002201520018-0"

"APPROVED FOR RELEASE: 08/09/2001 CIA-RDP86-00513R002201520018-0

USSR UDC 621.762.2

ANTIPIN, L. N., DROZDENKO, V. A., KOYGUSHSKIY, N. N., OLESOV, YU. G., USTINOV, V. S., ZAPADNYA, V. I., VOLYNSKIY, V. V., and KALUSHSKAYA, E. L.

"Technology of Production of Powders by Electrolysis of Melts With Soluble Anode"

Sb. tr. Vses. n.-i. i proyektn. in-t titana [Collected Works of All-Union Scientific-Research and Planning Institute for Titanium], 6, 1970, pp. 85-89, (Translated from Referativnyy Zhurnal-Metallurgiya, No. 1, 1971, Abstract No.1 G456 by the authors).

Translation: A technological plan is developed for the production of Ti and titanium alloy powders by electrolysis with a soluble anode. The optimal technological mode is selected for electrolytic powder production. The plan has been accepted for use. The Ti powders produced are equal in impurity content to the best types of Ti sponge. The influence of electrolyte temperature on properties of the Ti produced and on content of Cl is studied. The Ti produced has passed consumers' tests. 2 figures; 2 tables.

1/1

APPROVED FOR RELEASE: 08/09/2001 CIA-RDP86-00513R002201520018-0"

"APPROVED FOR RELEASE: 08/09/2001 CIA-RDP86-00513R002201520018-0

USSR

KAROV, D. D., KOYKOV, S. N., Leningrad Polytechnical Institute imeni M. I. Kalinin

"Fundamentals of Theoretical Analysis of Polarization and Nonlinear Optical Properties of Single Crystals"

Leningrad, Fizika Tverdogo Tela, Vol 14, No 12, Dec 72, pp 3659-3664

Abstract: General principles are formulated and equations are derived for theoretical analysis of polarization and the nonlinear optical properties of single crystals based on the usually accepted models of the crystal lattice. It is shown that nonlinear effects in single crystals can be attributed to three causes: 1) multipole components in the expansion of the potential induced by a polarized dielectric; 2) multipole corrections to the effective electric field; 3) anharmonic corrections to the elastic force of interaction between particles. A general expression for nonlinear susceptibility characterizing the generation of optical harmonics for the range of frequencies far from the dispersion region is derived on the basis of the Dicke-Overhauser model.

1/1

APPROVED FOR RELEASE: 08/09/2001 CIA-RDP86-00513R002201520018-0"

"APPROVED FOR RELEASE: 08/09/2001 CIA-RDP86-00513R002201520018-0

Epidemiology

USSR

UDC 616.981.455-036.21(282.247.33:282.6)

SEMENOV, M. Ya., BADALOV, M. Ye., SEMENOVA, A. P., and KOTECHIDI, Ye. K.,
Rostov oblast Sanitary Epidemiological Station

"The Existence of Local Tularemia Foci in the Don Delta"

Moscow, Zhurnal Mikrobiologii, Epidemiologii i Immunobiologii, No 5, 1970, pp 37-40

Abstract: The building of Tsimlyansk dam on the Don River made it possible to regulate the drainage of flood water. This led to a reduction in the number of dwelling sites for Arvicola terrestis, a small murine rodent, and a decrease in their population. Because of this, the incidence of tularemia declined, and only 25% of the usual number of tularemia cultures were isolated in that territory. However, the flood lands on the Don delta began to be used as fish hatcheries and turned into fields surrounded by banks. This created favorable conditions for rodents' nests and new tularemia foci. An accumulation of small rodents, water rats, and D. marginatus ticks was noted in this region. The density of rodents is particularly great when the lands are flooded, and as a result the possibility of a reactivation of the tularemia focus in this area is not excluded. Therefore, special attention should be paid to these territories in conducting a complex program of prophylactic measures for eradication of tularemia foci.

1/1

APPROVED FOR RELEASE: 08/09/2001 CIA-RDP86-00513R002201520018-0"

"APPROVED FOR RELEASE: 08/09/2001 CIA-RDP86-00513R002201520018-0

UDC 619:615.415

USSR

~~KOYSHBAYEV, G. K., Aspirant~~, and SUPIN, G. S., Candidate of Chemical Sciences, Helminthology Laboratory of the USSR Academy of Sciences and the All-Union Scientific Research Institute of Chemical Plant Protection

"The Effect of Temperature on the Activity of Chlorophos Ointment"

Moscow, Veterinariya, No 3, Mar 71, pp 90-91

Abstract: In 1969-1970, a 40% chlorophos ointment was used for the treatment of ear skin filariasis in cattle. Since the effectiveness of treatment was 98.3% and the ointment may be used again, the shelf-life of this compound was tested. The test ointment was prepared by mixing five parts of 80% chlorophos with four parts of anhydrous lanolin and one part of water. Aliquot samples were sealed in flasks, kept for 3 months at temperatures of 56°, 35°, and 18-20°C, and then the concentration of the biologically active substance was determined by a special polarographic method. Samples kept as 56° C lost all chlorophos; samples kept at 35° lost 34% of initial chlorophos content; and samples kept at room temperature retained all of the inital chlorophos content.

1/1

APPROVED FOR RELEASE: 08/09/2001 CIA-RDP86-00513R002201520018-0"

"APPROVED FOR RELEASE: 08/09/2001 CIA-RDP86-00513R002201520018-0

USSR

Aerospace Medicine

USSR UDC 613.693

KURDYAYEV, K. V., Lt Col Med Serv, KOZACHA, P. G., Lt Col Med Serv, PEMSHEV, V.V., Maj Med Serv, and GNITSEVICH, V. M., Maj Med Serv

"Psychophysiological Characterization of the Work Performed by Air Force Transportation Flight Personnel in Low-Altitude Flights"

Moscow, Voyenno-Meditsinskiy Zhurnal, No 5, 1973, pp 62-63

Abstract: In low altitude flights, because of impeded visual orientation and a reduced effective range of radio equipment, the pilot devotes 75-85% of his time to surveying the air space and ground surface ahead of him and to visually maintaining the altitude and course. In rough weather, these flights require not only concentrated attention but also a considerable physical effort and quick reactions each time the aircraft is pitched and tossed. All these factors cause nervous tension and emotional stress which are aggravated by frequent landings at unfamiliar airports. During stopovers, the flight personnel have little time to rest since they participate in loading and unloading. These specific aspects of low-altitude flights should be given careful consideration by the Air Force Transportation Medical Service. Since during prolonged flights over monotonous plains visual depth perception deteriorates, it is

1/2

APPROVED FOR RELEASE: 08/09/2001 CIA-RDP86-00513R002201520018-0"

"APPROVED FOR RELEASE: 08/09/2001 CIA-RDP86-00513R002201520018-0

USSR

KURDYAYEV, K. V., et al., Voyenno-Meditsinskiy Zhurnal, No 5, 1973, pp 62-63

recommended periodically to rise higher altitudes for 3-5 min. Light-filtering spectacles should be worn during flights over large water bodies and snow-covered areas on sunny days. Transfer from high-to low-altitude flights presents definite difficulties even to experienced pilots. Air Force physicians should pay particular attention to pilots just learning low-altitude skills and to those physically weak and emotionally unstable. Physical examinations should be performed between and prior to flights, and training must be planned according to the results. It is especially important strictly to adhere to the schedule of drills of gradually increasing difficulty and to utilize all ground-training equipment prior to flights. Since it is seldom possible for pilots to get adequate pre-flight rest at home during daytime, suitable facilities for rest and some sports should be made available at the airport. Members of each crew should be selected according to mutual psychological compatibility.

2/2

APPROVED FOR RELEASE: 08/09/2001 CIA-RDP86-00513R002201520018-0"

"APPROVED FOR RELEASE: 08/09/2001 CIA-RDP86-00513R002201520018-0

USSR UDC 629.78.002.3

NAZARENKO, P. V., KOZACHENKO, A. I.

"Effect of Jet Fuels, the Component Parts and Admixtures on the Deformability of Thin Surface Layers of Metal in the Presence of Sliding Friction"

V sb. Kontaktnogidrodinamich. teoriya smazki i yeye prakt. primeneniye v tekhn. (Contact-hydrodynamic Theory of Lubrication and Its Practical Application in Engineering--collection of works), Kuybyshev, 1972, p 78 (from RZh-Raketostroyeniya, otdel'nyy vypusk, No 12, Dec 72, Abstract No 12.41.252)

Translation: During the operation and maintenance of jet equipment, it has been established that the wear of the fuel system parts depends on the chemical composition of the fuel. In this paper a study has been made of the effect of the chemical composition of the fuels on the deformability of metals in the presence of friction. The magnitude of the elastic-plastic flow was determined by the polarization-optical method with respect to the intensity of illumination of double-refraction bands on a friction device with linear contact of the specimens at a sliding rate of 0.002 m/sec. By the studies it was established that the greatest deformations developed during friction in hydrofined T-7 fuel and the least, in distilled T-1 fuel. It was also established that the lubricating properties of the fuels were determined by the presence

1/2

APPROVED FOR RELEASE: 08/09/2001 CIA-RDP86-00513R002201520018-0"

"APPROVED FOR RELEASE: 08/09/2001 CIA-RDP86-00513R002201520018-0

USSR

NAZARENKO, P. V., et al., Kontaktnogidrodinamich. teoriya smazki i yeye prakt. primeneniye v tekhn., Kuybyshev, 1972, p 78

in them of surface-active substances and do not depend on the viscosity of the fuel. A study was made of the effect of oxygen dissolved in the fuels on the deformability of the metals -- the decrease in the oxygen content promotes an increase in the degree of deformability of the metals in the presence of friction. The effect of the hydrocarbon composition of the fuel on the development of elastic-plastic flows in the metals during the friction process was also investigated. It was found that the friction in aromatic hydrocarbons is accompanied by smaller deformations of the surface layers in magnitude and less depth of their propagation than in paraffinic hydrocarbons. A study was made of the effect of the hetero-organic compounds entering into the fuel composition on the deformability of the metals. It was established that certain nitrogen-containing compounds, sulfides and resinous compounds promote a decrease in deformability of the metals. The oxygen-containing compounds, unsaturated hydrocarbons and some mercaptan compounds promote an increase in the degree of deformation of the surface layers of the metal.

2/2

APPROVED FOR RELEASE: 08/09/2001 CIA-RDP86-00513R002201520018-0"