"APPROVED FOR RELEASE: 09/17/2001 CIA-RDP86-00513R002201610016-2

USSR UDC 547.551.4 + 541.49

GARNOVSKIY, A. D. KOLODYAZHNYY, YU. V., ALIYEVA, S. A., KROKHINA, N. F., GRANDBERG, I. I., OSIPOV, O. A., and PRESNYAKOVA, T. M., Rostov-on-Don State University and All-Union Agricultural Academy imeni K. A. Timiryazev

"Complex Compounds of Metals With Nitrogen-Containing Ligands. XIX. Complexes of Tin Tetrachloride With 1-Pyridylpyrazoles and Their 5-Hydroxy(amino) Derivatives"

Leningrad, Zhurnal Obshchey Khimii, Vol 40, No 5, May 70, pp 1114-1120

Abstract: Continuing their study of complexing in systems with several donor centers, the authors studied the interaction of tin tetrachloride with 1-(α, β or γ-pyridyl)pyrazoles and their 5-hydroxy and amino derivatives. The dipole moments of the resultant complexes were determined and their IR spectra studied for purposes of solving the question of the configuration and tautomerism of the ligands. A comparative study was made of the IR spectra of ligand and complex molecules in order to establish the localization site of the coordination bond.

1/1

APPROVED FOR RELEASE: 09/17/2001 CIA-RDP86-00513R002201610016-2"

"APPROVED FOR RELEASE: 09/17/2001 CIA-RDP86-00513R002201610016-2

Acc. Nr: AP0100370 Abstracting Service: CHEMICAL ABST. Ref. Code: UR 0109

110632b Nitrogen-containing biheterocyclic systems. I. Dipole moments and structure of 1-pyridylpyrazoles. Aliyev, S. A.; Kolodyazhnyi, Yu. V.; Garnovskii, A. D.; Osipov, O. A.; Grandberg, I. I.; Krokhina, N. E. (Rostov-na-Donu Gos. Univ., Rostov-on-Don, USSR). *Khim. Geterotsikl. Soedin.* 1970, (1), 45-9 (Russ). The dipole moments of 1-pyridylpyrazoles and their amino derivs. were detd. in CaH_2 at 25° with 5×10^{-4}-2×10^{-4} mole fraction. Comparison of exptl.

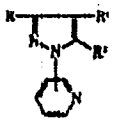

and vectorially calcd. dipole moments shows that 1-pyridyl pyrazoles, and 1-(3- or 4-pyridyl)5-aminopyrazoles have nonplanar configuration; the planar angle between the pyrazole and pyridine rings was calcd. For 1-(2-pyridyl)-5-aminopyrazoles the planar trans configuration is assumed due to intramol. H

REEL/FRAME 19841795

APPROVED FOR RELEASE: 09/17/2001 CIA-RDP86-00513R002201610016-2"

"APPROVED FOR RELEASE: 09/17/2001 CIA-RDP86-00513R002201610016-2

AP0100370

bonding. The following data were obtained (R, R', R', position attachment of pyridine ring, and planar angle between two rings given): Me, H, Me, 2, 58°; Me, H, Me, 3, 81°; Me, H, Me, 4, 0°; Pr, Et, NH_2, 3, 66°; $PhCH_2$, Ph, NH_2, 3, 56°; p-MeC_6H_4, H, NH_2, 3, 80°; Et, Me, NH_2, 4, 0°; Me, H, Cl, 1, 0°; Me, H, NH_2, 2, 0°; $PhCH_2$, Ph, NH_2, 2, 0°; Et, Me, NH_2, 2, 0°; Pr, Et, NH_2, 2, 0°; p-$H_2NC_6H_4$, H, NH_2, 2, 0°.

S. K. Banerjee et al

19841796

APPROVED FOR RELEASE: 09/17/2001 CIA-RDP86-00513R002201610016-2"

"APPROVED FOR RELEASE: 09/17/2001 CIA-RDP86-00513R002201610016-2

USSR UDC 542.91:547.1'118

IVANOV, B. YE., and KROKHINA, S. S., Institute of Organic and Physical Chemistry imeni A. Ye. Arbuzov, Academy of Sciences USSR

"Interaction of N-Aminomethylamides of Carboxylic Acids with Phosphorous Acid Esters"

Moscow, Izvestiya Akademii Nauk SSSR, Seriya Khimicheskaya, No 11, Nov 71, pp 2493-2499

Abstract: Continuing their study of the interaction of Mannich bases with trialkyl phosphites, the authors studied the interaction of Mannich bases from carboxylic acid amides with phosphorous acid esters, viz. the interaction of di- and trialkyl phosphites with N-dialkylaminomethylamides of acetic, benzoic, methacrylic acids and with N-dimethylaminomethylphthalimide. The reaction of the N-dialkylaminomethylamides of the above monoacids with trialkyl phosphites proceeds at 120-170° to give the corresponding esters of N-acylaminomethylphosphonic acids. N-Dimethylaminomethylphthalimide reacts with trialkyl phosphites only in the presence of a salt-forming agent -- acetic acid or methyl iodide, with the direction of the reaction depending on the character of the salt-forming agent. Thus, N-dimethylaminomethylphthalimide iodomethylate reacts

1/2

APPROVED FOR RELEASE: 09/17/2001 CIA-RDP86-00513R002201610016-2"

"APPROVED FOR RELEASE: 09/17/2001 CIA-RDP86-00513R002201610016-2

USSR

IVANOV, B. YE., and KORKHINA, S. S., Izvestiya Akademii Nauk SSSR, Seriya Khimicheskaya, No 11, Nov 71, pp 2493-2499

with triethyl phosphite at 200° to give diethyl ester of α-phthalimino-methylphosphonic acid. N-Dimethylaminomethylphthalimide reacts with trialkyl phosphites in the presence of acetic acid at 100-110° to give the corresponding esters of dimethylaminomethylphosphonic acid, phthalimide and alkyl acetate.

2/2

APPROVED FOR RELEASE: 09/17/2001 CIA-RDP86-00513R002201610016-2"

"APPROVED FOR RELEASE: 09/17/2001 CIA-RDP86-00513R002201610016-2

USSR UDC 542.91:661.718.1

IVANOV, B. YE., VALITOVA, L. A., and KROKHINA, S. S., Institute of Organic and Physical Chemistry imeni A. Ye. Arbuzov, Academy of Sciences USSR

"Reaction of N-(Acetoxymethyl)diethylamine with Certain Derivatives of Trivalent Phosphorus Acids"

Moscow, Izvestiya Akademii Nauk SSSR, Seriya Khimicheskaya, No 7, 1971, pp 1502-1505

Abstract: Reactions of mono-, di-, and triamidophosphites, triphenyl-, diethyl acetyl-, and diethyl chlorophosphites with (acetoxymethyl)diethylamine (I) was studied. The volatile reaction products were identified by gas-liquid chromatography in the reaction of (I) with mono- and diamidophosphites as being the corresponding esters of acetic acid and diethylacetamide in the reaction with triamidophosphite. Reactions of (I) with triphenyl phosphite occurs less vigorously than with amidophosphites: its completion requires heating to 80°. When the reaction mixture was distilled under vacuum, phenyl acetate and the diphenylester of diethylaminomethylphosphonic acid were isolated. When (I) reacts with diethyl acetylphosphite, the principal products were found to be acetic anhydride and the diethyl ester of diethylaminomethylphosphonic acid.

1/2

APPROVED FOR RELEASE: 09/17/2001 CIA-RDP86-00513R002201610016-2"

"APPROVED FOR RELEASE: 09/17/2001 CIA-RDP86-00513R002201610016-2

USSR

IVANOV, B. YE., et al., Izvestiya Akademii Nauk SSSR, Seriya Khimicheskaya, No 7, 1971, pp 1502-1505

It was found that the reaction of (I) with the acid chloride of diethylphosphorous acid occurs in two stages and that diethylchlorophosphite is an electrophile. This series of reactions shows that replacement of chlorine by an acetate group in an electrophilic reagent greatly expands the scope of the Arbuzov rearrangement.

2/2

APPROVED FOR RELEASE: 09/17/2001 CIA-RDP86-00513R002201610016-2"

"APPROVED FOR RELEASE: 09/17/2001 CIA-RDP86-00513R002201610016-2

USSR

UDC 547.341.26'118.07

IVANOV, B. Ye., and KROKHINA, S. S., "Order of the Red Banner of Labor" Institute of Physical and Organic Chemistry imeni A. Ye. Arbuzov

"A Method of Making N-Acylaminomethylphosphonate Esters"

Moscow, Otkrytiya, izobreteniya, promyshlennyye obraztsy, tovarnyye znaki, 1970, No 33, Soviet Patent No 284989, class 12, filed 9 Oct 69, published 29 Oct 70, p 25

Translation: This Author's Certificate introduces: 1. A method of making N-acylaminomethylphosphonate esters by the reaction of derivatives of N-methylolamides of carboxylic acids with a trialkyl phosphite with the application of heat and isolation of the product by conventional methods. As a distinguishing feature of the patent, the method is simplified while simultaneously increasing the yield of the product by using N-acetoxymethylamides of carboxylic acids as the methylolamides. 2. A modification of this method is distinguished by the fact that heating is done at 100-160°C.

1/1

APPROVED FOR RELEASE: 09/17/2001 CIA-RDP86-00513R002201610016-2"

"APPROVED FOR RELEASE: 09/17/2001 CIA-RDP86-00513R002201610016-2

USSR

UDC 542.91 + 661.718.1

IVANOV, B. YE., and KROKHINA, S. S., Institute of Organic and Physical Chemistry imeni A. Ye. Arbuzov, Academy of Sciences USSR

"Synthesis of p-Substituted Benzylphosphonic Acid Esters"

Moscow, Izvestiya Akademii Nauk SSSR, Seriya Khimicheskaya, No 11, Nov 70, pp 2629-2631

Abstract: The reaction of p-dimethylaminobenzyldiethylamine, p-dimethylaminobenzyl ethyl ether, p-methoxybenzyl ethyl ether and p-methoxybenzyl acetate with triethyl phosphite was studied. It was found that compounds containing the dimethylamino group in the para-position react with triethyl phosphite in the presence of acetic acid to give the diethyl ester of p-dimethylaminobenzylphosphonic acid. Esters of p-substituted benzylphosphonic acids could not be synthesized from p-methoxybenzyl ethyl ether and p-methoxybenzyl acetate and triethyl phosphite in the presence of acetic acid. p-Dimethylaminobenzyldiethylamine methiodide reacts with triethyl phosphite to give the diethyl

1/2

APPROVED FOR RELEASE: 09/17/2001 CIA-RDP86-00513R002201610016-2"

"APPROVED FOR RELEASE: 09/17/2001 CIA-RDP86-00513R002201610016-2

USSR

UDC 542.91 + 661.718.1

IVANOV, B. Ye., GORIN, Ya. A., and KROKHINA, S. S., Institute of Organic and Physical Chemistry imeni A. Ye. Arbuzov, Academy of Sciences USSR

"Synthesis of α-Acetaminomethylphosphonic Acid Esters"

Moscow, Izvestiya Akademii Nauk SSSR, Seriya Khimicheskaya, No 11, Nov 70, pp 2627-2629

Abstract: The reaction of N-alkoxymethylacetamides with trialkyl phosphites (in the presence of acetic acid), dialkyl chlorophosphites and diethyl acetylphosphite gives α-acetaminomethylphosphonic acid esters.

1/1

APPROVED FOR RELEASE: 09/17/2001 CIA-RDP86-00513R002201610016-2"

"APPROVED FOR RELEASE: 09/17/2001 CIA-RDP86-00513R002201610016-2

USSR UDC 612.823.5

BRYTVAN, Ya. M., VIYEVS'KIY, M. A., KROKHMAL', S. S., MAKAROVA, Z. O., NIKIFOROVA, I. P., POPLAV'SKA, L. I., and SLOVODYANYUK, Chair of Pathological Physiology, Vinnitsa Medical Institute

"Functional Response of Different Sections of the Brain to Extreme Stimuli"

Kiev, Fiziologicheskiy Zhurnal, No 5, 1972, pp 644-653

Abstract: Experiments on cats and rabbits showed that electrical activity of the cortex and subcortex, respiration, and arterial pressure are dependent on the original and present functional state of the nervous system. The effects of prolonged compression of soft tissues, increased intracranial pressure, alcoholic intoxication, asphyxia, blood loss, and various forms of hypertension were studied. Functional shifts were induced by preliminary injection of amphetamine sulfate or chlorpromazine, electrocoagulation of the anterior hypothalamus, and denervation of the sinocarotid and aortic vascular zones. Along with generalized and phasic reactions of electrical activity, cortical-subcortical dissociations occurred with signs of induction of the adjacent regions. A stress rhythm appeared quite often in the diencephalon and brainstem. The onset and course of the experimental pathology and accompanying electrical activity were dependent on both the original and

1/2

APPROVED FOR RELEASE: 09/17/2001 CIA-RDP86-00513R002201610016-2"

"APPROVED FOR RELEASE: 09/17/2001 CIA-RDP86-00513R002201610016-2

USSR

BRYTVAN, Ya. M., et al., Fiziologicheskiy Zhurnal, No 5, 1972, pp 644-653

present functional state of the nervous system. The mechanisms of the observed phenomena cannot be ascribed solely to the generalized influence of the reticular formation or to corticofungal impulses. Various neurogenic components are involved and it is through their interaction that the integral reaction of the brain is achieved.

2/2

APPROVED FOR RELEASE: 09/17/2001 CIA-RDP86-00513R002201610016-2"

"APPROVED FOR RELEASE: 09/17/2001 CIA-RDP86-00513R002201610016-2

1/3 024 UNCLASSIFIED PROCESSING DATE--20NOV70

TITLE--ABSORPTION SPECTRA OF FOUR PARTICLE NITROGEN EXCITON COMPLEXES IN SILICON CARBIDE -U-

AUTHOR-(02)-GORBAN, I.S., KROKHMAL, A.P.

COUNTRY OF INFO--USSR

SOURCE--FIZ. TVERD. TELA 1970, 12(3), 905-6

DATE PUBLISHED--------70

SUBJECT AREAS--PHYSICS, CHEMISTRY

TOPIC TAGS--ABSORPTION SPECTRUM, SILICON CARBIDE, NITROGEN, SINGLE CRYSTAL, COMPLEX COMPOUND

CONTROL MARKING--NO RESTRICTIONS

DOCUMENT CLASS--UNCLASSIFIED

PROXY REEL/FRAME--1996/1792 STEP NO--UR/0181/70/012/003/0905/0906

CIRC ACCESSION NO--AP0118762

UNCLASSIFIED

APPROVED FOR RELEASE: 09/17/2001 CIA-RDP86-00513R002201610016-2"

"APPROVED FOR RELEASE: 09/17/2001 CIA-RDP86-00513R002201610016-2

2/3 024 UNCLASSIFIED

CIRC ACCESSION NO--AP0118762 PROCESSING DATE--20NOV70

ABSTRACT/EXTRACT--(U) GP-0- ABSTRACT. THE ABSORPTION SPECTRA OF 4 PARTICLE N,EXCITON COMPLEXES WERE STUDIED. SINGLE CRYSTALS WERE STUDIED OF ALPHA SIC (6H) OF N TYPE 2-3 MM THICK AT 2 MUTUALLY PERPENDICULAR POLARIZATIONS OF THE VECTOR E RELATIVE TO THE HEXAGONAL C AXIS OF THE CRYSTAL AND AT 86DEGREESK WITH CONCN. OF BASIC CARRIERS 5.4 TIMES 10 PRIME17 MINUS 3.5 TIMES 10 PRIME18 CM PRIMENEGATIVE1. ABSORPTION CURVES ARE GIVEN FOR THE 2 POLARIZATIONS. AT E IS PERPENDICULAR TO C2 DOUBLET ABSORPTION LINES WERE OBSD. AT PHOTON ENERGIES 2.9828, 2.9945 AND 2.9978, 2.9995 EV, AND A WEAK MAX. AT 3.026 EV. ABSORPTION COEFF. OF THESE LINES IS LESS THAN1 CM PRIMENEGATIVE1. FROM THE SPECTRAL POSITION, THE ENERGY SEPN., AND RELATIVE INTENSITIES, THE LINES WITH ENERGY 2.9928 AND 2.9945 EV CAN BE IDENTIFIED WITH EXCITATION OF EXCITONS, LOCALIZED ON S AND RN CENTERS, WHICH ARE COMPOSED OF HOLES OF THE UPPER VALENCE SUBBAND T SUB6, AND THE ABSORPTION LINES WITH ENERGY 2.9976 AND 2.9995 EV WITH THE EXCITATION OF EXCITONS, LOCALIZED ON S AND R CENTERS, BUT COMPOSED OF HOLES OF THE LOWER SUBBAND T SUB6. THE ABSENCE OF THE ABSORPTION LINE CORRESPONDING TO THE P SUBONEGATIVE LINE OF LUMINESCENCE, IS PROBABLY RELATED TO THE FACT THAT THE BINDING ENERGY OF EXCITON WITH P N CENTER IS HALF THAT OF R AND S CENTERS, SO THAT THE PROBABILITY OF FORMATION OF N EXCITON COMPLEXES IN THE P POSITION IS SMALL AT 86DEGREESK OR THAT AN ESSENTIAL ROLE IS PLAYED BY THE PRESENCE OF AN INTERACTION BETWEEN IMPURITY ATOMS, AT THESE CONCNS. OF N. AT E IS PARALLEL TO C 1 ABSORPTION LINE IS OBSD. AT PHOTON ENERGY 3.040 EV.

UNCLASSIFIED

APPROVED FOR RELEASE: 09/17/2001 CIA-RDP86-00513R002201610016-2"

"APPROVED FOR RELEASE: 09/17/2001 CIA-RDP86-00513R002201610016-2

3/3 024 UNCLASSIFIED PROCESSING DATE--20NOV70

CIRC ACCESSION NO--AP0113762

ABSTRACT/EXTRACT--THIS LINE CAN BE RELATED TO THE EXCITATION OF N EXCITON COMPLEXES, COMPOSED OF HOLES OF THE VALENCE BAND T SUB1.

FACILITY: KIEV. GOS. UNIV. IM. SHEVCHENKO, KIEV. USSR.

UNCLASSIFIED

APPROVED FOR RELEASE: 09/17/2001 CIA-RDP86-00513R002201610016-2"

"APPROVED FOR RELEASE: 09/17/2001 CIA-RDP86-00513R002201610016-2

1/2 039 UNCLASSIFIED PROCESSING DATE--20NOV70

TITLE--MEASUREMENT OF IONOSPHERIC PARAMETERS FROM THE DOPPLER AND FARADAY EFFECTS OF COHERENT SIGNALS FROM GEOPHYSICAL ROCKETS RECORDED AT WIDELY

AUTHOR--(05)--MISYURA, V.A., KROKHMALNIKOV, YE.B., ZINCHENKO, G.N., FIRSAKOV, A.S., SLUTSKER, S.N.

COUNTRY OF INFO--USSR

SOURCE--GEOMAGNETIZM I AERONOMIIA, VOL. 10, NO. 2, 1970, P. 244-249

DATE PUBLISHED--------70

SUBJECT AREAS--ATMOSPHERIC SCIENCES, MISSILE TECHNOLOGY

TOPIC TAGS--GEOPHYSIC ROCKET, VERTICAL PROFILE, IONOSPHERE, IONOSPHERIC STATION, ELECTRON DENSITY, DOPPLER EFFECT, FARADAY EFFECT

CONTROL MARKING--NO RESTRICTIONS

DOCUMENT CLASS--UNCLASSIFIED

PROXY REEL/FRAME--1997/0145 STEP NO--UR/0203/70/010/002/0244/0429

CIRC ACCESSION NO--AP0119141

UNCLASSIFIED

APPROVED FOR RELEASE: 09/17/2001 CIA-RDP86-00513R002201610016-2"

"APPROVED FOR RELEASE: 09/17/2001 CIA-RDP86-00513R002201610016-2

2/2 039 UNCLASSIFIED PROCESSING DATE--20NOV70

CIRC ACCESSION NO--AP0119141

ABSTRACT/EXTRACT--(U) GP-0- ABSTRACT. APPLICATION OF A DIVERSITY RECEPTION TECHNIQUE TO THE DETERMINATION OF VERTICAL ELECTRON CONCENTRATION PROFILES, HORIZONTAL GRADIENTS, AND THE INTEGRAL ELECTRON CONTENT IN A VERTICAL IONOSPHERIC COLUMN AT HEIGHTS ON THE ORDER OF 500 KM. THE PARAMETERS OBTAINED ARE COMPARED WITH SIMULTANEOUS IONOSPHERIC SOUNDING DATA OBTAINED AT SEVERAL IONOSPHERIC STATIONS LOCATED AT DIFFERENT POINTS AROUND THE LAUNCHING SITE.

UNCLASSIFIED

APPROVED FOR RELEASE: 09/17/2001 CIA-RDP86-00513R002201610016-2"

"APPROVED FOR RELEASE: 09/17/2001 CIA-RDP86-00513R002201610016-2

1/2 049 UNCLASSIFIED PROCESSING DATE--20NOV70

TITLE--DETERMINING IONOSPHERIC EFFECTS ARISING DURING THE PROPAGATION OF RADIO WAVES FROM SPACED POINT REGISTRY OF THE FARADAY AND DOPPLER

AUTHOR-(05)-MISYURA, V.A., KROKHMALNIKOV, YE.B., ZINCHENKO, G.N., BIRYUKOV, G.A., GRIDIN, A.N.

K

COUNTRY OF INFO--USSR

SOURCE--MOSCOW, GEOMAGNETIZM I AERONOMIYA, VOL X, NO 3, 1970, PP 428-434

DATE PUBLISHED--------70

SUBJECT AREAS--ATMOSPHERIC SCIENCES, NAVIGATION, MISSILE TECHNOLOGY

TOPIC TAGS--RADIO WAVE PROPAGATION, IONOSPHERIC DISTURBANCE, GEOPHYSIC ROCKET, RADIO TRANSMITTER, DOPPLER EFFECT, FARADAY EFFECT, COHERENT SIGNAL

CONTROL MARKING--NO RESTRICTIONS

DOCUMENT CLASS--UNCLASSIFIED

PROXY REEL/FRAME--3005/0549 STEP NO--UR/0203/70/010/003/0428/0434

CIRC ACCESSION NO--AP0132735

UNCLASSIFIED

APPROVED FOR RELEASE: 09/17/2001 CIA-RDP86-00513R002201610016-2"

"APPROVED FOR RELEASE: 09/17/2001 CIA-RDP86-00513R002201610016-2

2/2 049 UNCLASSIFIED PROCESSING DATE--20NOV70

CIRC ACCESSION NO--AP0132735

ABSTRACT/EXTRACT--(U) GP-0- ABSTRACT. THIS PAPER DESCRIBES A METHOD FOR DETERMINING THE EFFECTS ARISING DURING RADIO WAVE PROPAGATION IN THE IONOSPHERE. THE AUTHORS GIVE INFORMATION ON VERTICAL IONOSPHERIC REFRACTION, IONOSPHERIC CORRECTIONS FOR THE OPTICAL AND GROUP PATH AND CORRECTIONS FOR THE DOPPLER SHIFT IN THE FREQUENCY OF COHERENT RADIO WAVES EMITTED BY TRANSMITTERS CARRIED ON GEOPHYSICAL ROCKETS. MORNING MEASUREMENTS WERE MADE AT FREQUENCIES OF 48 AND 144 MC-SEC IN SEPTEMBER AND OCTOBER 1965 IN THE MIDDLE LATITUDES OF THE SOVIET UNION FROM THREE STATIONS LOCATED SIMILAR TO 200 KM FROM THE ROCKET LAUNCHING POINT. THE RESULTS OF MEASUREMENTS OF THE REDUCED PHASE DIFFERENCE AND THE REDUCED DIFFERENCE IN DOPPLER FREQUENCY SHIFTS, AS WELL AS THE ROCKET SIGNAL FARADAY EFFECT AT TWO COHERENT FREQUENCIES, ARE GIVEN.

UNCLASSIFIED

APPROVED FOR RELEASE: 09/17/2001 CIA-RDP86-00513R002201610016-2"

"APPROVED FOR RELEASE: 09/17/2001 CIA-RDP86-00513R002201610016-2

USSR

UDC 615.477.24:616.12-089.28

SHUMAKOV, V. I., MOGILEVSKIY, E. B., KROL, A. D., ZUBAREV, V. A., SHIRKINA, T. V., and YUGIN. A. A., Scientific Research Institute of Clinical and Experimental Surgery, Moscow

"Model of an Artificial Heart for Intrapericardial Implantation"

Moscow, Meditsinskaya Tekhnika, No 5, Sep/Oct 70, pp 5-10

Abstract: A model is presented of an implantable artificial heart which consists of two mirror halves (right and left), each containing an artificial auricle and an artifical ventricle. The median surfaces of the ventricles are flat so that they may be easily connected after implantation. The overall dimensions of the unit and the volume of its cavities depend upon the heart dimensions of the animal for which the artificial heart is intended. Information is provided concerning the design, development, and testing of the artificial heart unit. Stand tests of implantable models developed by the authors and of control systems for them have made it possible to determine their functional parameters and to select the optimal operating conditions. It has been determined that the models can be used for experiments with total substitution of the pump function of the natural heart. Experiments on calves and dogs have been already initiated.

1/1

APPROVED FOR RELEASE: 09/17/2001 CIA-RDP86-00513R002201610016-2"

"APPROVED FOR RELEASE: 09/17/2001 CIA-RDP86-00513R002201610016-2

5

UDC 621.181.001.5

USSR

GRISHIN, A. D., GUTSALO, G. I., SHTAL'MAN, S. G., ABRYUTIN, A. A., DRONOV, L. A., SOLOMONOV, V. M., KROL', A. Ya. and BRITVIN, O. V., (all engineers); and Candidate of Technical Sciences VIKHREV, Yu. V., ORGRES-VTI-Kostromskaya GRES

"Results of a Study of the Combustion and Temperature Regime of the Lower Radiation Section of the TGMP-114 Boiler"

Moscow, Teploenergetika, No 3, 1973, pp 43-46

Abstract: Earlier gas-mazut boilers of this general type were not completely satisfactory on account of the low reliability of the heating surfaces (mainly the lower radiation section) and the great heat flow in the combustion chamber.

This difficulty has been corrected in the new main-series supercritical pressure TGMP-114 boiler by reducing the number of boilers (from 8 to 6), securing maximal removal of the extreme burners from the side walls, and use of recirculation of cold smoke gases into the lower part of the furnace chamber.

The direct-flow TGMP-114 boiler has an output of 950 t/hr, with steam parameters of 255 kg/cm^2 and 565/570°C. Analysis of operational data on chemical control

APPROVED FOR RELEASE: 09/17/2001 CIA-RDP86-00513R002201610016-2"

"APPROVED FOR RELEASE: 09/17/2001 CIA-RDP86-00513R002201610016-2

USSR

GRISHIN, A. D., et al., Teploenergetika, No 3, 1973, pp 43-46

shows that in 1971 iron content of feed water was 10-15 μg/kg, 15-20 μg/kg the previous year, and 20-50 μg/kg during the start-up period in 1969, with high content of 100-150 μg/kg in individual cases. These facts point up the formation of iron oxide deposits as a basic cause of the external corrosion of the screening pipes of the lower radiation section, and emphasize the necessity of water control and chemical cleansing.

2/2

APPROVED FOR RELEASE: 09/17/2001 CIA-RDP86-00513R002201610016-2"

"APPROVED FOR RELEASE: 09/17/2001 CIA-RDP86-00513R002201610016-2

USSR UDC: 8.74

JAKUBOWSKI, Ryszard, KRÓL, Jerzy

"Modeling Complex Systems With the Use of Functional Graphs"

Podst. sterow. (Principles of Control), 1972, 2, No 3, pp 269-277 (from RZh-Kibernetika, No 5, May 73, abstract No 5V857 by the authors)

Translation: The article considers a method of representing complex systems by a functional graph which is a modification of the method proposed in previous papers by the authors, and also the arrangement of data associated with this procedure, which enables modeling of complex systems by the union of programs which model subsystems. A description is given of the structure of data for a language constructed on the basis of this method.

In conclusion, a rough draft is presented of a modeling algorithm.

1/1

APPROVED FOR RELEASE: 09/17/2001 CIA-RDP86-00513R002201610016-2"

"APPROVED FOR RELEASE: 09/17/2001 CIA-RDP86-00513R002201610016-2

AA0040703 K Krol', L. Ya. UR 0482

Soviet Inventions Illustrated, Section I Chemical, Derwent, 1-70

240681 OBSERVATION OF HIGH-TEMPERATURE PROCESSES, e.g. in equipment for growing single crystals of semi-conductor compounds containing a volatile component, is improved by eliminating the effect of convective gas flows on the observations. In the case of hermetically-sealed vessels made of opaque material, with an optical quartz window in a branch pipe, a heated tube is installed in the branch pipe and sealed at the ends with sheets of optically-transparent material. Heating of materials to above 500°C in the vessel is possible without interference to observation.
2.8.67 as 1177543/22-1. L.YA.KROL' et ali. STATE SCIENTIFIC RES. & DES. INST. OF THE RARE-METALS IND. (11.9.69) Bul 13/1.4.69. Class 12g. Int.Cl.B 01j.

21

10

19750333

APPROVED FOR RELEASE: 09/17/2001 CIA-RDP86-00513R002201610016-2"

"APPROVED FOR RELEASE: 09/17/2001 CIA-RDP86-00513R002201610016-2

AA0040703

AUTHORS: Krol', L. Ya.; Matveyev, V. S.; Nashel'skiy, A. Ya.; [redacted] and Dmitriyev, G. D.

Gosudarstvennyy Nauchno - Issledovatel'skiy i Proyektnyy Institut Redkometallicheskoy Promyshlennosti

19750334

APPROVED FOR RELEASE: 09/17/2001 CIA-RDP86-00513R002201610016-2"

"APPROVED FOR RELEASE: 09/17/2001 CIA-RDP86-00513R002201610016-2

UDC 678.762.2/.3.002.2

USSR

KROL', V. A., and ESTRIN, A. S., All Union Scientific Research Institute of Synthetic Rubber imeni S. V. Lebedev

"Production of Stereoregular Butadiene and Isoprene Rubbers in the USSR"

Moscow, Kauchuk i Rezina, No 2, 1971, pp 13-14

Abstract: Research, experimental and planning-and-design work on the synthesis of regularly constructed cis-1,4 polymers of butadiene and isoprene with the use of complex organometallic catalysts first suggested by Ziegler and Natta was climaxed in 1964 with the creation of large-scale industrial facilities for the production of isoprene rubber (SKI-3) at the Kuybyshev and Volzhsk Synthetic Rubber Plants and the production of butadiene rubber (SKD) at the Yefremov Synthetic Rubber Plant. These rubbers are now being turned out by six major enterprises. The proportion of stereoregular rubber consumption was 30 percent in 1970 and is slated to rise in the future. Industry's mastery of the technology of stereoregular rubber production is evidenced by the fact that the technological cycle of putting polybutadiene and polyisoprene production facilities into production was accomplished in 20-30 days in 1967-1970. The article describes the principal properties of SKI-3 and SKD rubbers and

1/2

APPROVED FOR RELEASE: 09/17/2001 CIA-RDP86-00513R002201610016-2"

"APPROVED FOR RELEASE: 09/17/2001 CIA-RDP86-00513R002201610016-2

USSR

KROL', V. A., and ESTRIN, A. S., Kauchuk i Rezina, No 2, 1971, pp 13-14

their vulcanizates. The following directions for the further development of the production of these rubbers are listed:

1. Expanding the assortment of rubbers with the optimal complex of physico-mechanical properties for use in different sectors of industry (cable, electrical engineering, light industry, etc.).

2. Mastering the production of rubbers with non-discoloring antioxidants, as well as oil- and oil furnace black-reinforced rubbers.

3. Improvements in manufacturing processes for the purpose of raising the quality of rubbers and improving the technical and economic indicators of their production.

2/2

APPROVED FOR RELEASE: 09/17/2001 CIA-RDP86-00513R002201610016-2"

"APPROVED FOR RELEASE: 09/17/2001 CIA-RDP86-00513R002201610016-2

1/2 014 UNCLASSIFIED PROCESSING DATE--30OCT70

TITLE--DETERMINING THE TECHNOLOGICAL PROPERTIES OF SKD-1 RUBBER -U-

AUTHOR-(03)-K~~NDL,~~ V.A., DINER, YE.Z., GRECHANOVSKIY, V.A.

COUNTRY OF INFO--USSR

SOURCE--KAUCH. REZINA 1970, 29(3), 1-3

DATE PUBLISHED-------70

SUBJECT AREAS--MATERIALS, MECH., IND., CIVIL AND MARINE ENGR

TOPIC TAGS--VISCOELASTICITY, SYNTHETIC RUBBER, FLUID VISCOSITY, RUBBER WORKING MACHINERY/(U)SKD1 SYNTHETIC RUBBER

CONTROL MARKING--NO RESTRICTIONS

DOCUMENT CLASS--UNCLASSIFIED

PROXY REEL/FRAME--1997/0463 STEP NO--UR/0138/70/029/003/0001/0003

CIRC ACCESSION NO--AP0119399

UNCLASSIFIED

APPROVED FOR RELEASE: 09/17/2001 CIA-RDP86-00513R002201610016-2"

"APPROVED FOR RELEASE: 09/17/2001 CIA-RDP86-00513R002201610016-2

2/2 014 UNCLASSIFIED PROCESSING DATE--30OCT70

CIRC ACCESSION NO--AP0119399

ABSTRACT/EXTRACT--(U) GP-0- ABSTRACT. STATISTICAL METHODS INDICATE A LINEAR RELATION BETWEEN MOONEY VISCOSITY (M SUB2 SUB0) DETD. AT 20DEGREES OF SYNTHETIC SKD-1 RUBBER AND ITS WORKABILITY (W): W EQUALS 225,M SUB2 SUB0 MINUS 2.46. THE RELATION IS RECOMMENDED FOR ROUTINE PROCESS CONTROL USE. M SUB2 SUB0 IS RELATED LINEARLY TO MOONEY VISCOSITY DETD. AT 100DEGREES BY THE STD. SOVIET METHOD. THE VISCOELASTIC PROPERTIES OF SKD-1 (AND W) IMPROVE WITH THE INCREASE OF ITS POLYDISPERSITY. FACILITY: VSES. NAUCH.-ISSLED. INST. SIN. KAUCH. IM. LEBEDEVA, LENINGRAD, USSR.

UNCLASSIFIED

APPROVED FOR RELEASE: 09/17/2001 CIA-RDP86-00513R002201610016-2"

"APPROVED FOR RELEASE: 09/17/2001 CIA-RDP86-00513R002201610016-2

1/2 033 UNCLASSIFIED PROCESSING DATE--30OCT70

TITLE--RHEOLOGICAL BEHAVIOR OF POLYDISPERSED CIS,POLYBUTADIENES -U-

AUTHOR-(03)-GRECHANOVSKIY, V.A., DINER, YE.Z., KROL, V.A.

COUNTRY OF INFO--USSR

SOURCE--VYSOKOMOL. SOEDIN., SER. A 1970, 12(3), 561-7

DATE PUBLISHED--------70

SUBJECT AREAS--MATERIALS, CHEMISTRY

TOPIC TAGS--POLYMER RHEOLOGY, POLYBUTADIENE, SYNTHETIC RUBBER, CATALYTIC POLYMERIZATION, SHEAR STRESS, VISCOMETER, FLUID VISCOSITY

CONTROL MARKING--NO RESTRICTIONS

DOCUMENT CLASS--UNCLASSIFIED

PROXY REEL/FRAME--1995/1198 STEP NO--UR/0459/70/012/003/0561/0567

CIRC ACCESSION NO--AP0116663

UNCLASSIFIED

APPROVED FOR RELEASE: 09/17/2001 CIA-RDP86-00513R002201610016-2"

"APPROVED FOR RELEASE: 09/17/2001 CIA-RDP86-00513R002201610016-2

2/2 033 UNCLASSIFIED PROCESSING DATE--30OCT70

CIRC ACCESSION NO--AP0116663

ABSTRACT/EXTRACT--(U) GP-0- ABSTRACT. THE RHEOL. PROPERTIES OF CIS,POLYBUTADIENE (SKD RUBBER) (I) (OBTAINED BY POLYMN. IN THE PRESENCE OF TI SALTS) WERE STUDIED AT LOW AND HIGH SHEAR STRESSES (SIGMA) AND SHEAR RATES (GAMMA) BY MEANS OF A MODIFIED MOONEY VISCOMETER AT 20-100DEGREES. RAPID SEDIMENTATION ANAL. IN AN ULTRACENTRIFUGE SPINCO GAVE 3 SETS OF I SAMPLES HAVING DIFFERENT WT. AV. MOL. WT. AND (OR) POLYDISPERSITY INDEX. INCREASED POLYDISPERSITY AT A CONST. VISCOSITY AV. MOL. WT. BROUGHT ABOUT LOWER VISCOSITY. AT A GAMMA SIMILAR TO 1 SEC PRIME NEGATIVE1, THE VISCOSITY OF I WAS DEPENDENT OF POLYDISPERSITY, WHEREAS AT GAMMA IS LARGER THAN OR EQUAL TO 10 SEC PRIME NEGATIVE1, THE VISCOSITY WAS A SINGLE VALUED FUNCTION OF POLYDISPERSITY. THREE EQUATIONS, WHICH RELATED THE VISCOSITY OF I TO THE MOL. WT. UNDER VARIOUS FLOW CONDITIONS, WERE DERIVED. THE EXPONENT IN THE EQUATION WAS INVERSELY PROPORTIONAL TO SIGMA AND (OR) GAMMA. FACILITY: VSES. NAUCH. ISSLED. INST. SIN. KAUCH. IM. LEBEDEVA, LENINGRAD, USSR.

UNCLASSIFIED

APPROVED FOR RELEASE: 09/17/2001 CIA-RDP86-00513R002201610016-2"

"APPROVED FOR RELEASE: 09/17/2001 CIA-RDP86-00513R002201610016-2

USSR

UDC 615.214.9.915:612.825.266

KROLEVETS, G. N., and MARKIN, V. A., Laboratory of Nervous System Pharmacology, Institute of Pharmacology, Academy of Medical Sciences USSR, Moscow

"Electrophysiological and Histochemical Studies of the Effects of Neuroleptics on the Hippocampus"

Moscow, Farmakologiya i Toksikologiya, Vol 36, No 2, 1973, pp 146-149

Abstract: The effects of chlorpromazine (I) and trifluoperazine (II) on the hippocampus were studied electrophysiologically in rabbits and histochemically in rats. Investigations with unanesthetized and curare-treated rabbits that had received 1-5 mg/kg of I or II intravenously, showed that with both drugs the amplitude of hippocampal electrical activity increased by 60-100% at the time of the maximum response (20-60 min following drug administration), and had returned to initial levels by 2.5-3 h. Similar alterations in electrical activity were seen in the transcommissural response. Under the influence of I, stimulation of the sciatic nerve did not change, or changed insignificantly, the electrical activity. I and II differed with respect to hippocampal background electrical activity, in that I showed a greater synchronizing effect, and II frequently elicited spontaneous convulsive-like episodes. Histochemical studies were conducted on 135 white male rats (180-200 g) given one subcutaneous

1/2

APPROVED FOR RELEASE: 09/17/2001 CIA-RDP86-00513R002201610016-2"

"APPROVED FOR RELEASE: 09/17/2001 CIA-RDP86-00513R002201610016-2

USSR

KROLEVETS, G. N. and MARKIN, V. A., Farmakologiya i Toksikologiya, Vol 36, No 2, 1973, pp 146-149

injection of 1, 5, or 20 mg/kg of I or II, and decapitated 1,3, and 24 h later. The results showed that 5 and 20 mg doses of I or II significantly depressed activities of the flavin enzymes (DPN- and TPN-diaphorases and succinate dehydrogenase) and the pyridine dehydrogenases (lactic, isocitric, malic, glutamate, and alpha-glycerophosphate); the inhibiting effects on the former group were somewhat more pronounced. Furthermore, glucose-6-phosphate dehydrogenase was either unaffected or slightly elevated following treatment of the rats with I or II. In addition, II depressed hippocampal enzyme activity somewhat more than I did. The changes were most pronounced in the anterior hippocampus, and hardly evident in the posterior hippocampus. The layers most affected were II (Oriens) and IV (Rudiata). Maximum enzyme depression was apparent at 3 h, and by 24 h had been partially restored. These observations indicate the importance of metabolic and electrical changes in the hippocampus in the pharmacologic effects of I and II.

2/2

APPROVED FOR RELEASE: 09/17/2001 CIA-RDP86-00513R002201610016-2"

"APPROVED FOR RELEASE: 09/17/2001 CIA-RDP86-00513R002201610016-2

USSR UDC: 612.825.266.014.423.014.46:[615.241.3:547.757].
015.23:615.214.21

KROLEVETS, G. N., Laboratory of Pharmacology of the Nervous System, Institute of Pharmacology, Academy of Medical Sciences USSR, Moscow

"Antagonistic Effect of 5-Hydroxytryptophan and Neuroleptics on Evoked Potentials of the Hippocampus"

Moscow, Byulleten' eksperimental'noy biologii i meditsiny, No 8, 1972, pp 43-46

Abstract: The effect of neuroleptics and 5-hydroxytryptophan on the evoked potentials of the hippocampus was studied using nonanesthesized, curarized rabbits. Several types of hippocampus responses were examined, including local, transcommissural, and somatic. A detailed description of the experimental method and of each of the studied responses are given in a previous paper in this journal (No 12, 1969, p 47). Chlorpromazine, and triftazin were injected intravenously in doses of 1-5 mg/kg. It was found that chlorpromazine and triftazin markedly increased the amplitude of the local and transcommissural responses 100-200% above the original level, while the potentials responding to stimulation of the sciatic nerve varied only slightly from the original. Oscillograms of the responses are reproduced.
1/1

APPROVED FOR RELEASE: 09/17/2001 CIA-RDP86-00513R002201610016-2"

"APPROVED FOR RELEASE: 09/17/2001 CIA-RDP86-00513R002201610016-2

USSR

UDC 615.214.22:547.869(Fluorphenazinum)

LYUBIMOV, B. I., RAYEVSKIY, K. S., OSTROVSKAYA, R. U., BANKOV, N. K., and KROLEVETS, G. M., Laboratory of the Pharmacology of Nervous System, Pharmacology Institute, Academy of Medical Science USSR, Moscow

"Neurotropic Properties of Fluzophenazine"

Moscow, Farmakologiya i Toksikologiya, Vol 34, No 3, May-Jun 71, pp 287-290

Abstract: Neurotropic properties of fluzophenazine -- 10-{γ-[4-(β-hydroxyethyl)-piperazinyl-1]-propyl}-2-trifluoromethylphenothiazine dihydrochloride were investigated. The drug was found to be a highly potent neuroleptic. It produced catalepsy, inhibited conditioned reflexes of avoidance, spontaneous motor activity, averted phenamine-induced hyperactivity, prolonged and potentiated the anesthesizing effect of sodium thiopental and hexobarbital, synchronized EEG, and blocked EEG-activation provoked by an acoustic stimulant and phenamine. Fluphenazine is an extremely potent antiemetic. Compared with triftazin, fluphenazine is less toxic and exceeds trifluoperazine in neurotropic activity.

1/1

APPROVED FOR RELEASE: 09/17/2001 CIA-RDP86-00513R002201610016-2"

"APPROVED FOR RELEASE: 09/17/2001 CIA-RDP86-00513R002201610016-2

1/2 020 UNCLASSIFIED PROCESSING DATE--16OCT70

TITLE--RETROSTERNAL PLASTY IN CICATRICIAL ESOPHAREAL OBSTRUCTION IN CHILDREN -U-

AUTHOR-(03)-KROLEVETS, I.P., KRIVONOGOV, YU.B., PAVOLV, V.V.

COUNTRY OF INFO--USSR

SOURCE--VESTNIK KHIRURGII IMENI I. I. GREKOVA, 1970, VOL 104, NR 4, PP 109-111

DATE PUBLISHED--------70

SUBJECT AREAS--BIOLOGICAL AND MEDICAL SCIENCES

TOPIC TAGS--DIGESTIVE SYSTEM, PEDIATRICS, SMALL INTESTINE, LARGE INTESTINE, SURGERY

CONTROL MARKING--NO RESTRICTIONS

DOCUMENT CLASS--UNCLASSIFIED

PROXY REEL/FRAME--1988/0047 STEP NO--UR/0589/70/104/004/0109/0111

CIRC ACCESSION NO--AP0105146

UNCLASSIFIED

APPROVED FOR RELEASE: 09/17/2001 CIA-RDP86-00513R002201610016-2"

"APPROVED FOR RELEASE: 09/17/2001 CIA-RDP86-00513R002201610016-2

2/2 020 UNCLASSIFIED PROCESSING DATE--16OCT70

CIRC ACCESSION NO--AP0105146

ABSTRACT/EXTRACT--(U) GP-0- ABSTRACT. IN THE PAPER THE RESULTS OF 34 RETROSTERNAL PLASTIES IN CICATRICIAL ESOPHAGEAL OBSTRUCTION IN CHILDREN ARE DISCUSSED. THE TECHNIC OF CONSTRUCTION OF A RETROSTERNAL TUNNEL IS DESCRIBED. THE ADVANTAGES AND DESADVANTAGES OF INTESTINAL GRAFTS PRODUCED FROM THE SMALL INTESTINE AND COLON ARE CONSIDERED. IT IS RECOMMENDED TO USE THE SMALL BOWEL AND THE RIGHT COLON FOR ESOPHAGOPLASTY.

UNCLASSIFIED

APPROVED FOR RELEASE: 09/17/2001 CIA-RDP86-00513R002201610016-2"

"APPROVED FOR RELEASE: 09/17/2001 CIA-RDP86-00513R002201610016-2

Microelectronics

KROLEVETS, K.M.

JPRS 57333

25 October 1972

MICROELECTRONICS

Excerpts from Russian-language book edited by F. V. Lukin, Mikroelektronika, No 5, 1972, Sovetskoye Radio Publishing House, Moscow, UDC 621.382:621.396.6-181.5.

CONTENTS

	PAGE
Annotation	1
Obituary of Fedor Viktorovich Lukin	2
Foreword	3
Abstracts	5

[I - USSR - F]

APPROVED FOR RELEASE: 09/17/2001 CIA-RDP86-00513R002201610016-2"

"APPROVED FOR RELEASE: 09/17/2001 CIA-RDP86-00513R002201610016-2

cuits, an important role is played by the choice of a constant current source.

The article analyzes the dependence of instability of the logic differential of the integrated circuits for the current switches on change in the destabilizing factors (supply voltage, temperature, and technological scatter in the component parameters) by using different modifications of the constant current source.

Recommendations are given for the optimal selection of the constant current source.

The article contains 4 figures, 1 table, and 5 bibliographic references.

UDC 539.186.3.211.27

Distribution of Thermoelastic Deformations in the Surface Region of Thermally Oxidized Silicon. Valiyev, K.A., Kozlov, B.I., Kozin, A.A., Malov, A.G., and Rakov, A.V. in the Collection Mikroelektronika, edited by F.V. Lukin, No 5, p 282, Sovetskoye Radio Publishing House, 1972.

The article theoretically analyzes the distribution of elastic deformations in the surface region of thermally oxidized silicon. The authors examine the case of a dense oxide film on a semiconductor and the case of termination of its denseness. The value obtained agrees with the theoretical computation. The authors discuss the results of experiments testifying to the localization of the deformations in the surface layer of silicon at the sites of termination of denseness of the oxide. They show the influence of thermoelastic deformations on the chemical activity and volt-Faraday characteristics of the MDP structures.

The article contains 3 figures and 11 bibliographic references.

UDC 621.383.42:546.48.22/23

Investigation of the Longitudinal Operating Mode of CdS-CdSe Film Photoresistors. Vdovenkov, A.A., Krolevets, K.M., Komashko, V.A., and Skarzhevskaya, E.P. in the Collection Mikroelektronika, edited by F.V. Lukin, No 5, p 296, Sovetskoye Radio Publishing House, 1972.

The article describes a manufacturing method and the parameters of the CdS-CdSe photoresistors, operating in a longitudinal mode. The authors mention their high specific sensitivity (0.5-1 A/V·lu) and the weak dependence of the

APPROVED FOR RELEASE: 09/17/2001 CIA-RDP86-00513R002201610016-2"

"APPROVED FOR RELEASE: 09/17/2001 CIA-RDP86-00513R002201610016-2

parameters on temperature of the surrounding atmosphere. They give a comparison of the parameters of the photoresistors during operation in longitudinal and transverse modes.

The article contains 11 figures and 6 bibliographic references.

UDC 621.383.311 → 621.396.6-181.416

Analysis of Several Characteristics of the Operation of a Resonance High-Frequency Hybrid-Film Amplifier Made According to a Circuit With a Common Emitter. Aksenov, A.I., Blyachakov, V.I., Korobeynikov, M.V., Shagimuratov, [illegible], and Kutyrkin, Yu.N. In the Collection Mikroelektronika, edited by F.V. Lukin, No 5, p 310, Sovetskoye Radio Publishing House, 1972.

The article cites an analysis of the operation of a resonance microminiature high-frequency amplifier, operating in a linear mode. The authors show that with a constant time of the emitter circuit equal to zero, the magnitude of the capacitance of the blocking condenser is found to be the least. They also established that, for contemporary cascades high-frequency dynamic capacitances on the frequency characteristics of the cascade can be ignored.

The article contains 6 figures, 2 tables, and 6 bibliographic references.

-END-

11.734
CSO: 0702/73-S

APPROVED FOR RELEASE: 09/17/2001 CIA-RDP86-00513R002201610016-2"

"APPROVED FOR RELEASE: 09/17/2001 CIA-RDP86-00513R002201610016-2

USSR

UDC: 621.315.592

ALIYEVA, M. Kh., ALIYEV, T. I., and KROLEVETS, N. M., Institute of Physics, Baku

"Emission Hole-Trapping by Sensitivity Centers in High-Resistance GaTe:Ge"

Leningrad, Fizika i tekhnika poluprovodnikov, No 8, 1972, pp 1528-1531

Abstract: This paper represents an advance beyond the information acquired in an earlier article (T. I. Aliyev, et al, DAN AzSSR, 28, 1972, p 21) in which the authors reported on recombination transitions in high-resistance p-GaTe monocrystals alloyed with Ge and determined the parameters of sensitized recombination r-centers. The purpose of the present paper is to find out whether electrons and holes are captured by r-centers in GaTe, and to clarify the mechanism of hole capture by the r-centers. To make this latter clarification, the authors studied the steady-state photocurrents and luminescence intensity as functions of the temperature and excitation intensity at various temperatures. Curves are plotted for the photoluminescence spectra of GaTe at 138 and 300° K. It

1/2

APPROVED FOR RELEASE: 09/17/2001 CIA-RDP86-00513R002201610016-2"

"APPROVED FOR RELEASE: 09/17/2001 CIA-RDP86-00513R002201610016-2

USSR

ALIYEVA, M. Kh., et al, Fizika i tekhnika poluprovodnikov, No 8, 1972, pp 1528-1531

is proved that the band of maximum luminescence energy is the result of emission hole-capture by the r-centers in the GaTe. The authors thank G. B. Abdullayev for his interest in the work and M. K. Sheynkman for his discussion of the results.

2/2

APPROVED FOR RELEASE: 09/17/2001 CIA-RDP86-00513R002201610016-2"

"APPROVED FOR RELEASE: 09/17/2001 CIA-RDP86-00513R002201610016-2

Crystals & Semiconductors

UDC 539.293:535.374:546.681'191.1

USSR

BELEN'KIY, G. L., KROLEVETS, N. M., LASHKAREV, V. E., and SHEYNKMAN, M. K., Institute of Semiconductors, Academy of Sciences Ukrainian SSR, Kiev; Institute of Physics, Academy of Sciences Azerbaydzhan SSR, Baku

"Radiative Electron Capture by Sensitivity Centers in High-Pre sistivity GaAs"

Kiev, Ukrainskiy Fizicheskiy Zhurnal, Vol 16, No 1, Jan 71, pp 128-132

Abstract: In order to elucidate the mechanism of electron capture by r-centers, the authors studied the stationary dependence of the photocurrent and luminous intensity on temperature and excitation intensity (at various temperatures) as well as optical infrared quenching of photocurrent and luminescence. High-resistivity Cu-doped ($\sim 10^{-3}$ percent Cu) GaAs single crystals were studied. The photoluminescence spectra of typical specimens display two luminescence bands $h\nu_m = 0.99$ ev (band 1)

1/3

APPROVED FOR RELEASE: 09/17/2001 CIA-RDP86-00513R002201610016-2"

"APPROVED FOR RELEASE: 09/17/2001 CIA-RDP86-00513R002201610016-2

USSR

BELEN'KIY, G. L., et al., Ukrainskiy Fizicheskiy Zhurnal, Vol 16, No 1, Jan 71, pp 128-132

and $h\nu_m$ = 1.23 ev (band 2), which undergo thermal quenching due to thermal excitation of holes from the r-centers into the v-band and their subsequent capture by s-centers of fast recombination. It is shown that band 1 is due to radiative capture of electrons by the centers of slowest recombination of the majority carriers (r-centers). In the GaAs : Cu forbidden gap, and situated closer to the v-band than the r-centers are recombination m-centers $E_{vm} \approx$ 0.3 ev, which take part in the recombination at $T \leq 120^{\circ}$ K. It is shown that band 2 is due to electron capture by these centers.

In order to determine whether the r-centers are due to the Cu atoms present in the crystals, the intensity of the luminescence $h\nu_m$ = 1.04 ev observed in n-type GaAs specimens undoped

2/3

APPROVED FOR RELEASE: 09/17/2001 CIA-RDP86-00513R002201610016-2"

"APPROVED FOR RELEASE: 09/17/2001 CIA-RDP86-00513R002201610016-2

USSR

BELEN'KIY, G. L., et al., Ukrainskiy Fizicheskiy Zhurnal, Vol 16, No 1, Jan 71, pp 128-132

with Cu atoms whose Cu content, according to chemical analysis data, did not exceed $5 \cdot 10^{-6}$ percent (electron concentration $n = 1 \cdot 10^{15} - 1 \cdot 10^{16}$ cu m and mobility $\mu_n = 3 \cdot 10^{-3} - 5.5 \cdot 10^{-3}$ sq cm/v·sec in different crystals) was compared with the intensity of band 1 in the Cu-doped crystals. It was found that the luminescence band intensities of 1.04 and 0.99 ev in both types of crystals differed by a factor of three at most and the variation with temperature of the intensities of both bands and the variations of their intensities with excitation intensity were similar. This indicates that the luminescence centers responsible for the band $h\nu_m = 1.04$ ev are not directly related to copper atoms.

The authors thank A. V. LYUBCHENKO, Candidate of Physico-mathematical Sciences, for discussing the results.

3/3

APPROVED FOR RELEASE: 09/17/2001 CIA-RDP86-00513R002201610016-2"

"APPROVED FOR RELEASE: 09/17/2001 CIA-RDP86-00513R002201610016-2

Hydrobiology

USSR

KROM, A. (Reviewer)

"Golosa v Mire Bezmolviya" (Voices in the World of Silence) by V. R. Protasov and I. D. Nikol'skiy, Moscow, Pishchevaya Promyshlennost', 1969

Moscow, Rybovodstvo i Rybolovstvo, No 4, Jul/Aug 70, p 33

Abstract: The book contains diverse information on underwater sound phenomena and fishing. Topics discussed include the noise background of the sea, recently discovered hydronic waves that are of a type resembling electromagnetic oscillations, the structure of the auditory organ of fish, the "voices" and the frequencies perceived by fish, the significance of sounds emitted by fish, and how one can construct simple tape recorders and stethoscopes and use them. The history of the development of bionics is reviewed. Interesting facts are presented on the detonation of acoustic mines by fish and the technique of masking acoustic direction-finding by means of special sound films. However, there are several inconsistencies in the book. For instance, the authors state that success in fishing is purely a matter of chance, while information given in the book indicates that precise knowledge of the locations in which fish can be found and experience play a considerable role in fishing. The range over which sound emitted by fish propagates in air (e.g., the loud noise made by a perch

1/2

APPROVED FOR RELEASE: 09/17/2001 CIA-RDP86-00513R002201610016-2"

"APPROVED FOR RELEASE: 09/17/2001 CIA-RDP86-00513R002201610016-2

USSR

KROM, A., Rybovodstvo i Rybolovstvo, No 4, Jul/Aug 70, p 33

catching its prey on the surface) is confused with that of propagation in water. The assertion that adult fish generally do not train their young is contradicted by the observation that adult trout chase young trout away from fishing lures after having learned their significance themselves.

2/2

APPROVED FOR RELEASE: 09/17/2001 CIA-RDP86-00513R002201610016-2"

"APPROVED FOR RELEASE: 09/17/2001 CIA-RDP86-00513R002201610016-2

Acc. Nr: AP0041505 Abstracting Service: CHEMICAL ABST. 4/70 Ref. Code: UR 0366

K

89501r Molecular rearrangements during addition to unsaturated compounds. V. Intramolecular rearrangement during the halogenation of 3-methyl-1-buten-3-ol. Kartashov, V. R.; Kronn, E. N.; Bodrikov, I. V. (Gor'k. Politekh. Inst., Gorki, USSR). *Zh. Org. Khim.* 1970, 6(1), 15-19 (Russ). The reaction of $H_2C{:}CHCMe_2OH$ with *tert*-BuOCl in MeOH at 0-5° gave 8.5% $ClCH_2CHMeCOMe$, 2.5% 2-chloromethyl-3,3-dimethyloxirane (I), and 73.5 mixt. of 1:10 $ClCH_2CH(OMe)CMe_2OH$ (II)–$MeOCH_2CHClCMe_2OH$ (III). The structure of I was proven by dehydrochlorinating $ClCH_2CHClCMe_2OH$ with KOH. The action of KOH on II and III gave, resp., 2-methoxy-

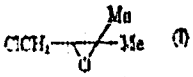

(I)

3-methyloxetane or 2-methoxymethyl-3,3-dimethyloxirane. In AcOH soln., 1:1 II–III product ratio is obtained. The formation of anti-Markovnikov product II depends on the electrophilic activity of the entering group and thus changes with the solvent polarity. CPJR

1/1

REEL/FRAME
19751373

APPROVED FOR RELEASE: 09/17/2001 CIA-RDP86-00513R002201610016-2"

"APPROVED FOR RELEASE: 09/17/2001 CIA-RDP86-00513R002201610016-2

1/2 019 UNCLASSIFIED PROCESSING DATE--18SEP70

TITLE--HIGH STRENGTH SILICATE CONCRETE ON THE BASIS OF LIME SILICA BINDERS
-U-

AUTHOR-(02)-SATALKIN, A.W., KROMIN, L.P.

COUNTRY OF INFO--USSR

SOURCE--BAUSTOFFINDUSTRIE, 1970, VOL 13, NR 3, PP 101-103

DATE PUBLISHED--------70

SUBJECT AREAS--MATERIALS

TOPIC TAGS--CONCRETE, CHEMICAL COMPOSITION, MECHANICAL STRENGTH, LIME, SILICATE, MAGNESIUM CHLORIDE, MAGNESIUM OXIDE, AMMONIUM CHLORIDE

CONTROL MARKING--NO RESTRICTIONS

DOCUMENT CLASS--UNCLASSIFIED
PROXY REEL/FRAME--1989/0172 STEP NO--GE/0157/70/013/003/0101/0103

CIRC ACCESSION NO--AP0106828

UNCLASSIFIED

APPROVED FOR RELEASE: 09/17/2001 CIA-RDP86-00513R002201610016-2"

"APPROVED FOR RELEASE: 09/17/2001 CIA-RDP86-00513R002201610016-2

2/2 019 UNCLASSIFIED PROCESSING DATE--13SEP70

CIRC ACCESSION NO--AP0106828

ABSTRACT/EXTRACT--(U) GP-0- ABSTRACT. THE AUTHORS REPORT ON A COMPREHENSIVE RESEARCH PROGRAMME WHICH WAS AIMED AT THE DEVELOPMENT OF A NEW SILICATE CEMENT ON THE BASIS OF LIME AND SAND. IT WAS STATED THAT THE CRUSHING STRENGTH OF THE LIME SILICA CEMENT DECREASES WITH RISING MGO CONTENT OF THE LIME. THE USE OF ADDITIVES MADE IT POSSIBLE TO ARRIVE AT A NEW GAIN IN STRENGTH. HIGHLY EFFICIENT ADDITIVES ARE MGCL SUB2 AND NH SUB4 CL. SILICATE CONCRETE WITH MGO LIME ARE REMARKABLY RESISTANT TO LOW TEMPERATURES. THE RESULTS OF INVESTIGATIONS INTO THE INFLUENCE OF CORROSION PROCESSES ON THE REINFORCEMENT OF SILICATE CONCRETE BASED ON MGO LIME ARE BRIEFLY DISCUSSED.

UNCLASSIFIED

APPROVED FOR RELEASE: 09/17/2001 CIA-RDP86-00513R002201610016-2"

"APPROVED FOR RELEASE: 09/17/2001 CIA-RDP86-00513R002201610016-2

USSR

UDC 547.971.2

FREYDLIN, L. KH., SHARF, V. Z., [redacted], and SHCHERBAKOVA, S. I.,
Institute of Organic Chemistry imeni N. D. Zelinskiy, Academy of Sciences USSR

"An Investigation of the Reduction of Cyclohexanone with an Alcohol in the Presence of Tris(triphenylphosphine)dichlororuthenium"

Leningrad, Zhurnal Organicheskiy Khimii, Vol 8, Vyp 5, May '72, pp 979-981

Abstract: The authors investigated the homogeneous catalysis by tris(triphenylphosphine)dichlororhuthenium of the reduction of cyclohexanone with several five- to seven-carbon aliphatic alcohols. Reactions were conducted under reflux condenser under an atmosphere of argon or hydrogen, and analysed by gas-liquid chromatography. The low yield of cyclohexanol shows that condensation is a side reaction. The reaction rates for various degrees of substitution on the alpha carbon were studied. They showed a correlation between increased steric hindrance and slower rate of reaction. The intermediate formation of a hydride of tris(triphenylphosphine)dichlororhuthenium was suggested as a mechanism. Hydrogenation by the ambient medium contributes to the reduction of cyclohexanone.

1/1

APPROVED FOR RELEASE: 09/17/2001 CIA-RDP86-00513R002201610016-2"

"APPROVED FOR RELEASE: 09/17/2001 CIA-RDP86-00513R002201610016-2

USSR

UDC 621.385.017.72:536.58(088.8)

BAKEYEV, P.B., BOYKO, B.I., ITUNIN, L.L., SERBINOV, A.M., KROMOY, YU. D.

"Unit For Control Of The Temperature Of Electrovacuum Devices"

USSR Author's Certificate No 262527, filed 2 Dec 68, published 13 May 70 (from RZh--Elektronika i yeye primeneniye, No 12, December 1970, Abstract No 12A113P)

Translation: A unit is proposed for control of the temperature of electrovacuum devices, which contains a curved thermosensitive plate acting on the regulating organ for the flow rate of a coolant flowing in a spiral which encircles the body of the device. At the extremes of the coils of the spiral, two intermediate plates are attached at the outer extremity of which the thermosensitive plate is secured and at the inner, fixed screws for adjustment of the moment of turning on of the regulating organ. Such construction of the device assures production of a signal proportional to the average temperature of the body. G.B.

1/1

APPROVED FOR RELEASE: 09/17/2001 CIA-RDP86-00513R002201610016-2"

"APPROVED FOR RELEASE: 09/17/2001 CIA-RDP86-00513R002201610016-2

USSR

YANAYT, Yu. A., ABAKUMOV, G. A., KROMSKIY, G. I., SEMENOV, A. P., FADEYEV, V. V., and KHOKHLOV, R. V., Moscow State University imeni M. V. Lomonosov and The Physico-Chemical Institute imeni L. Ya. Karpov

"Generation in the Ultraviolet Band With Frequency Tuning in a Paraterphenyl Solution Excited by a Flash Bulb"

Moscow, Pis'ma v Zhurnal Eksperimental'noy i Teoreticheskoy Fiziki, Vol 13, No 11, 5 Jun 71, pp 616-619

Abstract: This article discusses generation with fine tuning in the wavelength of 330-350 nm in a paraterphenyl solution excited by a flash bulb. One of the real problems in quantum electronics is the design of a frequency-tunable laser in the ultraviolet band of the spectrum. The authors show the broad possibilities here of using organic compounds as the active media especially paraterphenyl, which is found to be the best compound for producing tunable lasers in the ultraviolet band pumped by flash bulbs. The experimental procedures are discussed and the results are given in the form of an oscillogram and a table, which gives the threshold values and the limits of frequency tuning. The low values of the threshold energies for exciting the solutions shown in this table indicate that this pumping system is also effective for exciting a large number of other organic compounds. 1 figure, 1 table, bibliography of 3 titles.

1/1

APPROVED FOR RELEASE: 09/17/2001 CIA-RDP86-00513R002201610016-2"

"APPROVED FOR RELEASE: 09/17/2001 CIA-RDP86-00513R002201610016-2

UDC 632.95

USSR

KALABINA, A. V., BYCHKOVA, T. I., STEPANOV, D. Ye., KRON, V. A.

"Synthesis of New Physiologically Active Compounds Based on Aroxyethylenes"

V sb. Khimiya atsetilena (Chemistry of Acetylene--Collection of Works), Moscow, Nauka, 1972, pp 121-125 (from RZh-Khimiya, No 6 (II), Abstract No 6N610)

Translation: Substances with the formula $CHXX'CH(OR')S(S)P(OR)_2$ (I) were synthesized and tested, (X, X', R, R', the boiling point °C/mm, d^{20}_4 and n^{20}_D are presented): Cl, Cl, Et, 2-MeC_6H_4, 140-5/0.03, 1.2674, 1.5540; Cl, Cl, Et, 4-MeC_6H_4, 160-2/0.07, 1.2748, 1.5540; Cl, Cl, Et, 3-MeC_6H_4, 133-6/0.02, 1.2500, 1.5498; Cl, Cl, Et, 4-ClC_6H_4, 154-9/0.05, 1.3593, 1.5632; Cl, Cl, Et, 2.4-Cl_2-C_6H_3, 157-162/0.04, 1.3923, 1.5672; Cl, Cl, Me, Ph, 140-2/0.04, 1.4100, 1.5772; Cl, Cl, Me, 4-ClC_6H_4, 150-7/0.03, 1.4310, 1.5812, H, Br, Et, Ph, --, 1.3535, 1.5680; Cl, Br, Et, Ph, --, 1.4153, 1.5700; Br, Br, Et, Ph, --, --, 1.5820; and also $CH_2ClCh(OPh)SCOMe$, boiling point 90-1°/0.1, melting point 41-2°; $Ch_2ClCH(OC_6H_4Me\text{-}2)SCOMe$, boiling point 91-3°/0.07, melting point 43°; $CHCl_2$-$CH(OPh)SC(S)NEt_2$, melting point 60-1°. The I reveals high activity with respect to the tetranychoidea superfamily and houseflies. The tests demonstrate that the adducts of vinyl esters of phenols with cyclopentadiene and

1/2

APPROVED FOR RELEASE: 09/17/2001 CIA-RDP86-00513R002201610016-2"

"APPROVED FOR RELEASE: 09/17/2001 CIA-RDP86-00513R002201610016-2

USSR

KALABINA, A. V., et al., V sb. Khimiya atsetilena, 1972, pp 121-125

its derivatives are significantly inferior to the compounds used at the present time with respect to fungicidal, insecticidal and acaricidal activity. The pesticidal activity of the adducts increases as a result of the addition of thyilating reagents.

2/2

APPROVED FOR RELEASE: 09/17/2001 CIA-RDP86-00513R002201610016-2"

"APPROVED FOR RELEASE: 09/17/2001 CIA-RDP86-00513R002201610016-2

USSR UDC 632.95

KRON, YE. M., POPOVA, M. N., STEPANOV, D. YE., KALABINA, A. V.

"Thiylation of Aorxynorbornenes"

Irkutsk, Khimiya aromat. i nepredel'n. soyedin.--sbornik (Chemistry of Aromatic and Unsaturated Compounds -- collection of works), 1971, pp 305-310 (from RZh-Khimiya, No 10, May 73, Abstract No 10N533 by T. G. Chekareva)

Translation: Compounds of general formula (I)

[R =Bu, Ph, MeCO, $(MeO)_2PS$, $(EtO)_2PS$, R' = aryl] are produced by thiylation of aroxynorbornenes. Examples: 5.5 g of PhSH is added by drops to 10 g of 4-cresoxynorbornene. Catalyst is HCl (gas). The mixture is held for 3 hours at 45-50°C, and 9.3 g of compound I is isolated by vacuum distillation (R = Ph, R' = $4\text{-}MeC_6H_4$), boiling point 162-5°C/0.01, $n^{20}D$ 1.5985, yield 63%. BuSH is added analogously, but at 85-90°C. Addition of $(MeO)_2PSSH$ and $(EtO)_2PSSH$ is done without a catalyst. The following type I compounds are synthesized (given are R, R', boiling point in °C/mm, $n^{20}D$, d_4^{20}, yield in %): MeCO,

1/3

APPROVED FOR RELEASE: 09/17/2001 CIA-RDP86-00513R002201610016-2"

"APPROVED FOR RELEASE: 09/17/2001 CIA-RDP86-00513R002201610016-2

USSR

KRON, YE. M., et al., Khimiya aromat. i nepredel'n. soyedim.--sbornik, 1971, pp 305-310

2-MeC_6H_4, 145-8/0.03, 1.5585, 1.1464, 54; MeCO, 3-MeC_6H_4, 142-5/0.03, 1.5581, 1.1456, 69; MeCO, 4-MeC_6H_4, 160-2/0.03, 1.5608, 1.1428, 62.2; MeCO, 4-ClC_6H_4, 210-5/1, 1.5684, 1.1266, 69.6; Ph, 2-MeC_6H_4, 153-9/0.03, 1.6015, 1.1420, 56.5; Ph, 3-MeC_6H_4, 152-3/0.03, 1.6019, 1.1429, 59.7; Ph, 4-ClC_6H_4, 129-33/0.08, 1.5413, 1.112, 50.1; Ph, 4-BrC_6H_4, 172-4/0.08, 1.6184, —— , 54; $(MeO)_2PS$, 2-MeC_6H_4, —— , 1.5655, 1.1849, 95.5; $(MeO)_2PS$, 3-MeC_6H_4, —— , 1.5547, 1.1630, 98; $(MeO)_2PS$, 4-MeC_6H_4, —— , 1.5665, 1.2005, 94.4; $(MeO)_2PS$, α-naphthyl, —— , 1.5995, —— , 99; Bu, 2-MeC_6H_4, 142-7/0.06, 1.5465, —— , 62; Bu, 4-MeC_6H_4, 141-4/0.03, 1.5451, 1.0328, 65; Bu, 3-MeC_6H_4, 150-2/0.06, 1.5443, 1.1004, 67; Bu, 4-ClC_6H_4, 200-3/0.03, 1.5545, 1.3006, 60; $(EtO)_2PS$, 2-MeC_6H_4, —— , 1.5545, —— , 97.9; $(EtO)_2PS$, 4-MeC_6H_4 —— ,

2/3

APPROVED FOR RELEASE: 09/17/2001 CIA-RDP86-00513R002201610016-2"

"APPROVED FOR RELEASE: 09/17/2001 CIA-RDP86-00513R002201610016-2

USSR

KRON, YE. M., et al., Khimiya aromat. i nepredel'n. soyedin.--sbornik., 1971, pp 305-310

1.5541, 1.1546, 99; $(EtO)_2PS$, 3-MeC_6H_4, ——, 1.5558, ——, 98.2; $(EtO)_2PS$, 4-ClC_6H_4, ——, 1.5519, ——, 97.8; $(EtO)_2PS$, 2-$MeOOCC_6H_4$, ——, 1.5549, ——, 99. Compounds I have acaracidal properties, but are not up to the accepted standards for activity. It is shown that the acidity of the corresponding thiol determines the ease with which the reaction takes place.

3/3

APPROVED FOR RELEASE: 09/17/2001 CIA-RDP86-00513R002201610016-2"

"APPROVED FOR RELEASE: 09/17/2001 CIA-RDP86-00513R002201610016-2

1/2 024 UNCLASSIFIED PROCESSING DATE--09OCT70

TITLE--DETERMINATION OF ABSORBED DOSES OF LONG WAVE ROENTGEN RADIATION WITH THE AID OF TISSUE EQUIVALENT PLASTIC SCINTILLATORS -U-

AUTHOR-(03)-FROLOVA, A.V., KOLTILOVA, V.G., KRONGAUZ, A.N.

COUNTRY OF INFO--USSR

SOURCE--MEDITSINSKAYA RADIOLOGIYA, 1970, VOL 15, NR 4, PP 57-61

DATE PUBLISHED--------70

SUBJECT AREAS--BIOLOGICAL AND MEDICAL SCIENCES

TOPIC TAGS--PLASTIC, SCINTILLATOR, RADIATION DOSIMETRY, RADIUM, RADIOTHERAPY, X RAY MEASUREMENT

CONTROL MARKING--NO RESTRICTIONS

DOCUMENT CLASS--UNCLASSIFIED

PROXY REEL/FRAME--1990/0956 STEP NO--UR/0241/70/015/004/0057/0061

CIRC ACCESSION NO--AP0109113

UNCLASSIFIED

APPROVED FOR RELEASE: 09/17/2001 CIA-RDP86-00513R002201610016-2"

"APPROVED FOR RELEASE: 09/17/2001 CIA-RDP86-00513R002201610016-2

2/2 024 UNCLASSIFIED PROCESSING DATE--09OCT70

CIRC ACCESSION NO--AP0109113

ABSTRACT/EXTRACT--(U) GP-0- ABSTRACT. THE PAPER DEALS WITH PROBLEMS OF USING TISSUE EQUIVALENT SCINTILLATORS FOR DETERMINING THE ABSORBED ENERGY AND DISTRIBUTION OF ABSORBED DOSES OF LONG WAVE RDENTGEN RADIATION. IT IS SHOWN THAT THE RATIO BETWEEN THE VALUE OF ABSORBED ENERGY AND THE TECHNICAL EFFICIENCY OF THE SCINTILLATOR IS DETERMINED BY A NUMBER OF PARAMETERS. THE AUTHORS GIVE THE VALUES OF THESE PARAMETERS FOR SOME RADIATION REGIMES USED IN RADIUM THERAPY. FACILITY: MOSKOVSKIY N-I RENTGENORADIOLOGICHESKIY INST. MINISTERSTVA ZDRAVOOKHRANENIYA RSFSR.

UNCLASSIFIED

APPROVED FOR RELEASE: 09/17/2001 CIA-RDP86-00513R002201610016-2"

"APPROVED FOR RELEASE: 09/17/2001 CIA-RDP86-00513R002201610016-2

Acc. Nr: AP0052538 Abstracting Service: CHEMICAL ABST. 5-70 Ref. Code: UR0459

101159a **Kinetic dependences of polycyclization in polyphosphoric acid. Synthesis of high-molecular-weight poly - 1,3,4-oxadiazoles.** Krongauz, E. S.; Korshak, V. V.; Virpsha, Z. O.; Travnikova, A. E.; Sheina, V. E.; Loishin, H. V. (Inst. Elementoorg. Soedin., Moscow, USSR). *Vysokomol. Soedin., Ser. A* 1970, 12(1), 135-9 (Russ). The polycondensation-polycyclization of HO_2CRCO_2H (R is 4,4'-$C_6H_4OC_6H_4$, 1,3-C_6H_4, or 1,4-C_6H_4) with $H_2NNH_2.H_2SO_4$ or $H_2NNH_2.H_3PO_4$ (I) in polyphosphoric acid (II) gave III. In the presence of acids stronger

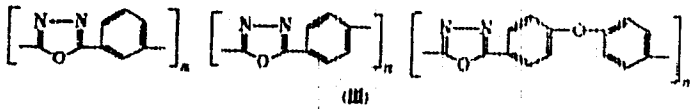

(III)

than II the mol. wt. of III was reduced. The reaction of HO_2CRCO_2H with H_2NNH_2 in the absence of strong acids was slow. High temps. accelerated the reaction, but also reduced the mol. wt. of III. The highest yields and mol. wts. were obtained when instead of H_2OCRCO_2H their K or Na salts were used. The optimum I-dicarboxylic acid salt ratio was 1:1.2; the optimum temps. were 160°, 180°, or 200° for 4-$NaO_2CC_6H_4OC_6H_4CO_2Na$ - 4, 4-$NaO_2CC_6H_4CO_2Na$, or 3-$NaO_2CC_6H_4CO_2Na$, resp. CPJR

REEL/FRAME
19821181

APPROVED FOR RELEASE: 09/17/2001 CIA-RDP86-00513R002201610016-2"

"APPROVED FOR RELEASE: 09/17/2001 CIA-RDP86-00513R002201610016-2

1/2 038 UNCLASSIFIED PROCESSING DATE--30OCT70

TITLE--PHOTOCHROMISM OF ORGANIC COMPOUNDS. II. KINETICS OF REVERSIBLE AND IRREVERSIBLE PHOTOREACTIONS OF 2,2 PRIME, 4 PRIME,DINITROBENZYL PYRIDINE

AUTHOR-(03)-PARSHUTKIN, A.A., BAZOV, V.P., KRONGAUZ, V.A.

COUNTRY OF INFO--USSR

SOURCE--KHIM. VYS. ENERG. 1970, 4(2), 131-8

DATE PUBLISHED-------70

SUBJECT AREAS--CHEMISTRY

TOPIC TAGS--RADIATION EFFECT, CHEMICAL REACTION KINETICS, AROMATIC NITRO COMPOUND, PYRIDINE, PHOTOCHEMISTRY

CONTROL MARKING--NO RESTRICTIONS

DOCUMENT CLASS--UNCLASSIFIED

PROXY REEL/FRAME--1992/1626 STEP NO--UR/0456/70/004/002/0131/0138

CIRC ACCESSION NO--AP0112620

UNCLASSIFIED

APPROVED FOR RELEASE: 09/17/2001 CIA-RDP86-00513R002201610016-2"

"APPROVED FOR RELEASE: 09/17/2001 CIA-RDP86-00513R002201610016-2

2/2 038 UNCLASSIFIED PROCESSING DATE--30OCT70

CIRC ACCESSION NO--AP0112620

ABSTRACT/EXTRACT--(U) GP-0- ABSTRACT. THE DIRECTION AND QUANTUM YIELDS WERE STUDIED ON PHOTOCHEM. REACTIONS OCCURRING IN SOLNS. OF THE TITLE COMPD. (I) IN ETOH AT 195DEGREESK. THE SPECTRUM OF THE SOLNS. IS NOT CHANGED DURING THE REACTIONS, WITH THE EXCEPTION OF THE APPEARANCE OF A NEW ABSORPTION BAND AT 567.5 NM, WHICH BELONGS TO A COLORED PRODUCT (II) FORMED DIRECTLY AND REVERSIBLY FROM I. IN IRRADIATING AN ETOH SOLN. OF I BY MONOCHROMATIC RADIATION (366 NM) WITH THE INTENSITY OF 6.9 TIMES 10 PRIME NEGATIVE5 EINSTEIN-L.-SEC, THE DEPENDENCE OF THE ABSORBANCE AT 567 NM ON TIME HAS A MAS. AT SIMILAR TO 24 MIN. THE ANAL. OF THE DEPENDENCE SHOWED THAT 2 SIDE REACTION PRODUCTS ARE ALSO FORMED IN WHICH BY PRODUCTS III AND IV, HAVING THE SAME ABSORPTION SPECTRUM AS I, ARE FORMED DIRECTLY AND IRREVERSIBLY FROM I AND II, RESP. EQUATIONS WERE DERIVED FOR DETG. MOLAR ABSORPTIVITIES AND QUANTUM YIELDS.

FACILITY: FIZ.-KHIM. INST. IM. KARPOVA, MOSCOW, USSR.

UNCLASSIFIED

APPROVED FOR RELEASE: 09/17/2001 CIA-RDP86-00513R002201610016-2"

"APPROVED FOR RELEASE: 09/17/2001 CIA-RDP86-00513R002201610016-2

1/2 019 UNCLASSIFIED PROCESSING DATE--30OCT70

TITLE--PHOTOCHROMISM OF ORGANIC COMPOUNDS. III. EFFECT OF TEMPERATURE AND SOLVENT NATURE ON REVERSIBLE AND IRREVERSIBLE PHOTOREACTIONS OF 2,(2

AUTHOR-(03)-BAZOV, V.P., PARSHUTKIN, A.A., KRONGAUZ, V.A.

COUNTRY OF INFO--USSR

SOURCE--KHIM. VYS. ENERG. 1970, 4(2), 174-5

DATE PUBLISHED--------70

SUBJECT AREAS--CHEMISTRY

TOPIC TAGS--PHOTOCHEMISTRY, PYRIDINE, AROMATIC NITRO COMPOUND, CHEMICAL REACTION KINETICS, STYRENE, METHACRYLATE

CONTROL MARKING--NO RESTRICTIONS

DOCUMENT CLASS--UNCLASSIFIED

PROXY REEL/FRAME--1992/1625 STEP NO--UR/0456/70/004/002/0174/0175

CIRC ACCESSION NO--AP0112619

UNCLASSIFIED

APPROVED FOR RELEASE: 09/17/2001 CIA-RDP86-00513R002201610016-2"

"APPROVED FOR RELEASE: 09/17/2001 CIA-RDP86-00513R002201610016-2

2/2 019 UNCLASSIFIED PROCESSING DATE--30OCT70

CIRC ACCESSION NO--AP0112619

ABSTRACT/EXTRACT--(U) GP-0- ABSTRACT. THE KINETICS WAS STUDIED OF REVERSIBLE AND IRRVERSIBLE PHOTOREACTIONS OF THE TITLE COMPD. (I) IN ETOH SOLNS. AT 77DEGREESK, IN THIN LAYERS OF POLYSTYRENE AND PLOYMETHACRYLATE AT 195 AND 77DEGREESK, AND IN C SUB7 H SUB16 SOLNS. AT 195DEGREESK. IN THE GLASS LIKE ETOH MATRIX AT 77DEGREESK, PRODUCTS II AND III ARE FORMED DIRECTLY FROM I INREVERSIBLE AND IRREVERSIBLE REACTIONS, RESP., WITH QUANTUM YIELDS OF 0.08 AND 0.02 MOLE-EINSTEIN. THE QUANTUM YIELDS ARE MARKEDLY LOWER THAN THOSE AT 195DEGREESK; THIS IS DUE TO THE EXISTENCE OF ETOH IN SOLID STATE AT 77DEGREESK. THE REPLACEMENT OF POLAR ETOH BY NONPOLAR C SUB7 H SUB16 AT 195DEGREESK LOWERS THE QUANTUM YIELD OF THE REVERSIBLE FORMATION OF II AND INCREASES THE IRREVERSIBLE REACTION YIELD. FACILITY: FIZ. KHIM. INST. IM. KARPOVA, MOSCOW, USSR.

UNCLASSIFIED

APPROVED FOR RELEASE: 09/17/2001 CIA-RDP86-00513R002201610016-2"

"APPROVED FOR RELEASE: 09/17/2001 CIA-RDP86-00513R002201610016-2

1/3 022 UNCLASSIFIED PROCESSING DATE--30OCT70

TITLE--PHOTOCHROMISM OF ORGANIC COMPOUNDS. IV. BEHAVIOR OF A 2, 2 PRIME,4,4 PRIME,5,5 PRIME, HEXAPHENYL,1,2

AUTHOR-(02)-KRONGAUZ, V.A., PROKHODA, A.L.

COUNTRY OF INFO--USSR

SOURCE--KHIM. VYS. ENERG. 1970, 4(2), 176

DATE PUBLISHED-------70

SUBJECT AREAS--CHEMISTRY

TOPIC TAGS--SPECTROPHOTOMETRIC ANALYSIS, EPR SPECTRUM, IMIDAZOLE, FREE RADICAL, COMPLEX COMPOUND, UV RADIATION, PHOTO EFFECT, BENZENE DERIVATIVE

CONTROL MARKING--NO RESTRICTIONS

DOCUMENT CLASS--UNCLASSIFIED

PROXY REEL/FRAME--1997/1155 STEP NO--UR/0456/70/004/002/0176/0176

CIRC ACCESSION NO--AP0120005

UNCLASSIFIED

APPROVED FOR RELEASE: 09/17/2001 CIA-RDP86-00513R002201610016-2"

"APPROVED FOR RELEASE: 09/17/2001 CIA-RDP86-00513R002201610016-2

2/3 022 UNCLASSIFIED PROCESSING DATE--30OCT70

CIRC ACCESSION NO--AP0120005

ABSTRACT/EXTRACT--(U) GP-0- ABSTRACT. SPECTROPHOTOMETRIC AND EPR METHODS SHOWED THAT RECOMBINATION IN THE DARK OF THE FREE TRIPHENYLIMIDAZYL RADICALS (I) IN C SUB6 H SUB6 IN THE PRESENCE OF THE TITLE BIIMIDAZOLYL DERIV. (II) IS A 2ND ORDER REACTION AT THE II CONCN. OF SIMILAR TO 10 PRIME NEGATIVE5 M AND A 1.5TH ORDER REACTION OF THE II CONCN. SIMILAR TO 10 PRIME NEGATIVE4 M. THIS IS EXPLAINED BY AN INTERMEDIATE COMPLEX FORMATION BETWEEN I AND II; THE COMPLEX REACTS WITH I IN FORMING 2 MOLS. OF II AND ITS CONCN. (AS DETD. BY THE II CONCN.) AFFECTS THE REACTION ORDER. THE SPLITTING OF H FROM THE ETOH MOL. BY I HAS THE RATE CONST. OF SIMILAR TO 1.6 TIMES 10 PRIME NEGATIVE4 IN THE DARK AT 23DEGREES AND LARGER THAN OR EQUAL TO 3.5 TIMES 10 PRIME3 L.-MOLE-SEC IN IRRADIATING THE SYSTEM (2M ETOH IN C SUB6 H SUB6 CONTG. I AND II) BY THE LIGHT WITH LAMBDA 546 NM. EXCITED I ARE ASSUMED TO PARTICIPATE IN THE H SPLITTING, THE QUANTUM YIELD BEING SIMILAR TO 0.007 MOLE=EINSTEIN. THE FORMATION OF TRIPHENYLIMIDAZOLE WAS STUDIED IN DEPENDENCE ON THE TIME OF THE IRRADN. WITH UV RADIATION OF SOLNS. OF II. BOTH EXCITED AND GROUND STATE MOLS. OF II TAKE PART IN THE REACTION, THE QUANTUM YIELDS OF WHICH ARE 0.2-0.3 AND 0.3-0.4 MOLE-EINSTEIN AT LAMBDA 303-313 AND 365 NM, RESP. THE PHOTODECOMPN. OF II TO RADICALS BY LAMBDA 253.7 AND 365 NM RADIATION WAS STUDIED WITH C SUB6 H SUB6 AND BENZOPHENONE AS THE SENSITIZERS, RESP. THE QUANTUM YIELDS DEPEND ON THE STARTING II CONCN. AND REACH THE SATD. VALUES OF SIMILAR TO 1 AND 0.01 MOLE-EINSTEIN AT THE II CONCNS. OF SIMILAR TO 10 PRIME NETATIVE2 AND SIMILAR TO 10 PRIME NEGATIVE4 M IN THE 1ST AND 2ND CASES, RESP.

UNCLASSIFIED

APPROVED FOR RELEASE: 09/17/2001 CIA-RDP86-00513R002201610016-2"

"APPROVED FOR RELEASE: 09/17/2001 CIA-RDP86-00513R002201610016-2

3/3 022 UNCLASSIFIED PROCESSING DATE--30OCT70

CIRC ACCESSION NO--AP0120005

ABSTRACT/EXTRACT--FACILITY: FIZ.-KHIM. INST. IM. KARPOVA, MOSCOW, USSR.

UNCLASSIFIED

APPROVED FOR RELEASE: 09/17/2001 CIA-RDP86-00513R002201610016-2"

"APPROVED FOR RELEASE: 09/17/2001 CIA-RDP86-00513R002201610016-2

USSR UDC 661.143:546.41'78

KRONGAUZ, V. G., MIKHAIEV, A. A. and KAPLENOV, I. G.,

"Effect of Purity and Thermal History on the Thermal De-excitation of Calcium Tungstate"

Stavropol' Sb. nauch. tr. VNII lyuminoforov i osobo chist. veshchestv (Collection of Scientific Papers of the All-Union Scientific Research Institute of Phosphors and Ultra-Pure Compounds), No 7, 1972, pp 27-32 (from Referativnyy Zhurnal -- Khimiya, No 7, 1973, Abstract No 7L198)

Translation: The thermal relaxation curves were studied after excitation with UV light and Xrays in samples of $CaWO_4$ obtained from the fractional recrystallation of tungstic acid. The nature of the factors causing differences in the structure of the curves of different samples was determined.

1/1

APPROVED FOR RELEASE: 09/17/2001 CIA-RDP86-00513R002201610016-2"

"APPROVED FOR RELEASE: 09/17/2001 CIA-RDP86-00513R002201610016-2

USSR UDC 661.143

MERZLYAKOV, A. T., KRONGAUS, V. G.

"Infrared Stimulation of Some Powdered Luminophors"

Sb. nauch. tr. VNII lyuminoforov i osobo chist. veshchestv (Collection of Scientific Works of the All-Union Scientific Research Institute of Luminophors and Materials of Extreme Purity), 1972, vyp. 7, pp 75-77 (from RZh-Khimiya, No 6 (II), 1973, Abstract No 6L164)

Translation: Data are presented on the sensitivity to radiation with $\lambda \geq 1$ micron of a large group of polycrystalline luminescent compounds: ZnS:Pr, SrS:Ag, SrS:Eu, SrS:Cu, $Ba_2P_2O_7:TiO_2$, Y_2SiO_5:Ce, $Y_2Al_5O_{12}$:Ce, YBO_3:C2, Y_2O_3:Nd and so on.

1/1

APPROVED FOR RELEASE: 09/17/2001 CIA-RDP86-00513R002201610016-2"

"APPROVED FOR RELEASE: 09/17/2001 CIA-RDP86-00513R002201610016-2

USSR UDC 661.143.017

KRONGAUZ, V. G., KHALUPOVSKIY, M. D., and DESYUK, V. G.

"Thermoluminescence of Halophosphate Phosphors Due to Mercury Adsorption"

Sb. nauch. tr. VNII lyuminoforov i osobo chist. veshchestv (Collection of Scientific Works of All-Union Scientific Research Institute for Phosphors and Ultrapure Substances), 1971, vyp. 6, pp 19-22 (English summary) (from Zhur. Khimiya, No 16, 25 Aug 72, Abstract No 16L137 from summary)

Translation: The authors investigated the thermally stimulated luminescence of halophosphate luminescent materials after the technological operations of fabricating a fluorescent lamp. They found high-temperature thermoluminescence with a maximum at $\sim 320^{\circ}$ C; the interaction of the phosphor with mercury vapor sufficed to cause it to appear without photoexcitation. Similar luminescence is also observable on heating of the specimens in air. This effect is due to the presence of Mn^{3+} in the luminescent materials.

1/1

APPROVED FOR RELEASE: 09/17/2001 CIA-RDP86-00513R002201610016-2"

"APPROVED FOR RELEASE: 09/17/2001 CIA-RDP86-00513R002201610016-2

USSR UDC: 661.143

PIVNEVA, S. P., KRONGAUZ, V. G., PAN'KOVA, L. T., GUGEL', B. M.

"Formation of (Zn·Cd)S Solid Solutions During Sintering"

Sb. Nauch. tr. VNII lyuminoforov i osobo chist. veshchestv (Collected Scientific Works of the All-Union Scientific Research Institute of Phosphors and Very Pure Substances), 1971, vyp. 6, pp 36-41 (from RZh-Khimiya, No 15, Aug 72, Abstract No 15L184)

Translation: The high sensitivity of the method of diffusion reflection spectra to analysis of the composition and degree of homogeneity in the ZnS·CdS system is used for studying the peculiarities of the formation of a solid solution as a function of preparative conditions and the quality of the raw material. The authors reveal the degree to which the rate of sintering is affected by the quality of the initial zinc- and cadmium sulfides, treatment of ZnS with various "washing agents" (NH_4OH, NH_4Cl and KOH), conditions of heating the charge, and the gas atmosphere (vacuum, hydrogen, argon, hydrogen sulfide). Existing methods for charge preparation and equipment for calcining do not ensure complete reproducibility of the product even in the presence of fluxes.

1/1

APPROVED FOR RELEASE: 09/17/2001 CIA-RDP86-00513R002201610016-2"

"APPROVED FOR RELEASE: 09/17/2001 CIA-RDP86-00513R002201610016-2

UDC 536.24:532.54

USSR

KRONIN, I. V., POKHVALOV, YU. YE. VOSKRESENSKIY, K. D.

"Problem of Studying Critical Thermal Fluxes in the Case of Forced Movement of Water"

V sb. Vopr. teplofiz. yadern. reaktorov. Vyp. 3 (Problems of Thermophysical Nuclear Reactors. vyp. 3--collection of works), Moscow, Atomizdat Press, 1971, pp 32-38 (from RZh-Mekhanika, No 11, Nov 71, Abstract No 11B668)

Translation: Distilled water was boiled in a copper tube with an inside diameter of 5 mm and 80mm long. The experiments were performed at pressures of 1.5 and 30 bars with underheating of the liquid close to zero in the range of mass velocities W_ρ from 40 to 20,000 kg/m^2-sec. A low-inertia oscillograph was used in the experiments to measure the flow rate through the operating channel, the vapor content at its exit, and the wall temperature of the channel.

It was established that in thermal fluxes close to critical, high frequency (~10 hertz) pulsations of the vapor content develop in the channel at the exit and corresponding pulsations develop in the water flow rate through the channel. At $W_\rho < 2 \cdot 10^3$ kg/m^2-sec, the mass flow rate during the pulsations reaches practically zero values. Choking the flow before the working channel reached 5-7 absolute atmospheres, and the ordinarily used electron devices of

1/2

APPROVED FOR RELEASE: 09/17/2001 CIA-RDP86-00513R002201610016-2"

"APPROVED FOR RELEASE: 09/17/2001 CIA-RDP86-00513R002201610016-2

USSR

KRONIN, I. V., et al., Vopr. teplofiz. yadern. reaktorov. vyp. 3, Moscow, Atomizdat Press, 1971, pp 32-38

the EPID type with DM-6 and the standard manometers failed to record any pulsations. The noted phenomenon is most clearly exhibited at low pressures and low velocities. The dependence of q_{cr} on W_ρ turned out to be nonmonotonic. In the range of low velocities $q_{cr} \sim W_\rho^{0.5}$ and q_{cr} can be appreciably smaller than in a large volume. In the medium velocity range the dependence on the velocity is strongest $q_{cr} \sim W_\rho^{1.2}$, and at high velocities (a pressure of 30 bars) a region is observed where the increase in velocity by more than an order either has no effect or weakly reduces q_{cr}. The nature of the oscillograms obtained permits the conclusion that in these three regions the mechanism of occurrence of the crises differs qualitatively. The bibliography has 14 entries.

2/2

APPROVED FOR RELEASE: 09/17/2001 CIA-RDP86-00513R002201610016-2"

"APPROVED FOR RELEASE: 09/17/2001 CIA-RDP86-00513R002201610016-2

USSR UDC 537.533.2+537.534

DOROZHKIN, A. A., KRONKALNS, G. YE.

"Ion-Electron Emission of Incandescent Metals"

Tr. Leningr. politekhn. in-ta (Works of Leningrad Polytechnical Institute), 1970, No 311, pp 77-82 (from RZh-Fizika, No 12(I), Dec 70, Abstract No 12Zh655)

Translation: A technique for measuring ion-electron emission of incandescent metals by using an ion beam periodically modulated in intensity is discussed. The design of an experimental setup for investigating electron emission of various metals under the action of H_2^+ ions at target temperatures up to 2100°K is described. Data is presented on ion-electron emission of Ta at H_2^+ ion energies from 0.2 to 10 kev and target temperatures from 300 to 2100°K. Authors abstract.

1/1

APPROVED FOR RELEASE: 09/17/2001 CIA-RDP86-00513R002201610016-2"

"APPROVED FOR RELEASE: 09/17/2001 CIA-RDP86-00513R002201610016-2

USSR

UDC 661.143:546.41'78

KRONRAYZ, V. G., MERZLYAKOV, A. T., KAPLENOV, I. G., GURVICH, A. M., and MIKHALEV, A. A.

Sb. nauch. tr. VNII lyuminoforov i asobo chist. vechshestv (Collection of Scientific Works From the All-Union Scientific Research Institue of Lumenophors and Principles for Purifying These Compounds), Vyp 7, 1972, pp 72-74 (from Referativnyy Zhurnal -- Khimiya, No 8(II), 1973, Abstract No 8L162 by N. Sh.)

Translation: A preliminary study of the photostimulated luminescence allowed the establishment of the spectral characteristics of a series of basic capture centers in $CaWO_4$ and explained the relationship between the excited absorption bands and peaks of thermal-stimulated luminescence. This permitted the expectation that further study of the photostimulated luminescence in complexes by other methods would give useful information on the nature of the capture centers, the mechanism of the recombination processes, and the role of these factors in the luminescence of this interesting and industrially important class of luminescent compounds of the type $CaWO_4$.

1/1

APPROVED FOR RELEASE: 09/17/2001 CIA-RDP86-00513R002201610016-2"

"APPROVED FOR RELEASE: 09/17/2001 CIA-RDP86-00513R002201610016-2

1/2 015 UNCLASSIFIED PROCESSING DATE--09OCT70

TITLE--COPOLYMERS STUDIED FROM GELATION CURVES -U-

AUTHOR-(05)-PETERBURGSKAYA, L.D., BALAKIRSKAYA, V.L., KRONMAN, A.G., SVETOZARSKIY, S.V., KOCHNEVA, N.N.

COUNTRY OF INFO--USSR

SOURCE--PLAST. MASSY 1970, (3), 9-11

DATE PUBLISHED--------70

SUBJECT AREAS--MATERIALS, CHEMISTRY

TOPIC TAGS--COPOLYMER, GELATION, PLASTICIZER, POLYVINYL CHLORIDE, ACRYLATE, PHTHALATE, LATEX

CONTROL MARKING--NO RESTRICTIONS

DOCUMENT CLASS--UNCLASSIFIED

PROXY REEL/FRAME--1992/1923 STEP NO--UR/0191/70/000/003/0009/0011

CIRC ACCESSION NO--AP0112907

UNCLASSIFIED

APPROVED FOR RELEASE: 09/17/2001 CIA-RDP86-00513R002201610016-2"

"APPROVED FOR RELEASE: 09/17/2001 CIA-RDP86-00513R002201610016-2

2/2 015 UNCLASSIFIED PROCESSING DATE--09OCT70

CIRC ACCESSION NO--AP0112807

ABSTRACT/EXTRACT--(U) GP-0- ABSTRACT. GELATION CURVES MAY BE USED TO DET. CONTENT AND HOMOGENEITY OF SIMILARLY PREPD. COPOLYMERS BY DETG. TEMP. BEHAVIOR IN PLASTICIZERS. GELATION CURVES FOR POLY(VINYL CHLORIDE) (I) AND ME ACRYLATE (II) VINYL CHLORIDE (III) COPOLYMERS (IV), PREPD. BY (NH SUB4) SUB2 S SUB2 O SUB8 CATALYZED EMULSION POLYMN., IN BU BENZYL PHTHALATE PLASTICIZER DIFFERED WITH CONTENT OF II. THE TEMPS. OF SWELLING AND OF SOLN. DECREASED LINEARLY WITH INCREASE IN COMPONENT (II OR VINYL ACETATE (V)) CONTENT SO THAT COMPNS. OF NEW COPOLYMERS CAN BE DETD. FROM SUCH CURVES. A MIXT. (A) OF I WITH IV SHOWED THE CHARACTERISTIC VISCOSITY MAX. OF IV AND I AND THE GELATION CURVE OF A WAS BROADER THAN THAT OF I. GELATION CURVES OF III-V COPOLYMERS PREPD. BY 3 DIFFERENT METHODS (DISPERSION, LATEX, AND SOLN. POLYMN.) DIFFERED BY SWELLING TEMPS. AND SOLN. TEMPS. AND IN WIDTH (DISTANCE FROM EACH OTHER).

UNCLASSIFIED

APPROVED FOR RELEASE: 09/17/2001 CIA-RDP86-00513R002201610016-2"

"APPROVED FOR RELEASE: 09/17/2001 CIA-RDP86-00513R002201610016-2

USSR

KRONROD, M. A., MERZLYAKOV, N. S., and YAROSLAVSKIY, L. P.

"Experiment in Hologram Reproduction Using Computers"

Leningrad, Zhurnal Tekhnicheskoy Fiziki, No 2, 1972, pp 419-420

Abstract: The authors, members of IPPI (Institute of Information Transmission Problems) of the USSR Academy of Sciences, conducted an experiment on the Minsk-22 digital computer for the purpose of reproducing the image of an object from its hologram developed from a Fourier system. The results of this experiment, described as the first step in the use of a computer for this purpose, are given in the present paper. A hologram made in the A. F. Ioffe Physico-technical Institute was used in the experiment for the purpose of investigating the possibility of transmitting holograms over a phototelegraphic channel. The basic stages of the experiment are outlined, and three photographs showing an original hologram, its reproduction through the use of the computer, and its reproduction by laser are obtained. The authors note that the whole reproduction procedure using the computer takes about six hours of machine time on the Minsk-22.

1/1

APPROVED FOR RELEASE: 09/17/2001 CIA-RDP86-00513R002201610016-2"

"APPROVED FOR RELEASE: 09/17/2001 CIA-RDP86-00513R002201610016-2

KRONSHTADTSKIY-KAREV, V.I.

Medicine-underwater sports

JPRS 57439

7 November 1972

MEDICAL SUPERVISION IN THE PURSUIT OF UNDERWATER SPORTS

Translation of Russian-language monograph edited by A. A. Askerov, and V. I. Kronshtadtskiy-Karev: Vrachebnyy Kontrol' Pri Zanyatiyakh Podvodnym Sportom, 1971, Signed to press 18 November 1971, Medicine Publishing House, 268 pages. UDC: 797.22.083.

CONTENTS

	PAGE
Introduction	1
1. Underwater Sports in the Soviet System of Physical Training	3
2. The Influence of Systematic Underwater Sports Exercises on the Human Body	11
3. Hygienic Characteristics of Respiratory Equipment Utilized in Underwater Sports	40
4. The Direct Influence of Underwater Sports Exercises on the Body	62
5. The Medical Safeguarding of Underwater Sports Training and Competition	160
6. Otorhinolaryngological Supervision of Underwater Sports Activities	[illegible]
7. Supervision of the Functional Condition of the Central Nervous System in Athlete-Underwater Swimmers	177
8. First Aid, Treatment and Prevention of Certain Illnesses Specific to Athlete-Underwater Swimmers	194

APPROVED FOR RELEASE: 09/17/2001 CIA-RDP86-00513R002201610016-2"

"APPROVED FOR RELEASE: 09/17/2001 CIA-RDP86-00513R002201610016-2

USSR UDC [537.226 + 537.311.33] : [537 + 535]

KROO, N. Ya., SENTIRMAY, Zh.

"Anomalies of Tunnel Resistance Due to the Effect of the Semiconductor-Dielectric Junction"

Dubna, Soobshch. ob"yedin. in-ta yadern. issled. (Reports of the United Institute of Nuclear Research) Laboratory of Neutron Physics, R 13-5852 (Reprint), 1971, 10 pp, illustrated (from RZh-Fizika, No 11, 1971, Abstract No 11E1221)

Translation: Null anomalies of tunnel resistance are detected in contacts with thin layers of unmagnetized metal on the insulator surface. The resultant anomalies are interpreted on the basis of the theory of small capacitances.

1/1

APPROVED FOR RELEASE: 09/17/2001 CIA-RDP86-00513R002201610016-2"

"APPROVED FOR RELEASE: 09/17/2001 CIA-RDP86-00513R002201610016-2

USSR UDC 519.1

KROPACHEV, L. A. and LOMAYEV, G. V.

"Calculation of Twice-Symmetric Systems by the Method of Bi-directional Graphs"

Izhevsk, Avtomat. ustroystva ucheta i kontrolya--Sbornik (Automatic Devices for Recording and Monitoring -- Collection of Works), No 6, 1970, pp 264-273 (from Referativnyy Zhurnal -- Matematika, No 6, June 71, Abstract No 6V388, by V. Yevstigneyev)

Translation: The problem of the transformation of the so-called twice-symmetric electric circuit to a form that permits application to calculation of the transfer coefficients based on the Mason formula, using an algorithm developed by the authors for multi-component chain circuits (Abstract No 6V387), is solved.

1/1

APPROVED FOR RELEASE: 09/17/2001 CIA-RDP86-00513R002201610016-2"

"APPROVED FOR RELEASE: 09/17/2001 CIA-RDP86-00513R002201610016-2

USSR

VIL'NER, L. M., ZEYTLENOK, N. A., CHIMAKOV, M. P., KROPACHEV, V. A., and TRUKHMANOVA, L. B., Institute of Poliomyelitis and Viral Encephalitides, Academy of Medical Sciences USSR, Institute of High-Molecular-Weight Compounds, Academy of Sciences USSR

"Use of Synthetic Copolymers Derived From Vinylpyrrolidone for Interferon Induction and for Increasing Resistance to Viral Infections"

Riga, Fiziologicheski i Opticheski Aktivnyye Polimernyye Veshchestva, "Zinatne," 1971, pp 137-144

Abstract: Antiviral and interferon-inducing activities of copolymers of vinylpyrrolidone (VP) with crotonic acid (CA), crotonic aldehyde (CAL), and maleic anhydride (MA) were studied. Interferon activity was determined by intraperitoneal injection of mice with 0.5 ml. of copolymers of different concentration, followed by blood serum analysis. Analysis results showed that interferon titers were <16, 16, 32-24, 42, 128-155 for VP with CA; and <16, <16, 48, not determined, 188-252 for VP with MA 2, 4, 6, 8, and 24 hrs, respectively, after injection. Effectiveness of these copolymers was high if they were administered to mice prior to infection with tickborne encephalitis virus. However, all of them were ineffective if given to mice 24 hr after infection. Injection of a large group of mice infected with low doses

1/2

APPROVED FOR RELEASE: 09/17/2001 CIA-RDP86-00513R002201610016-2"

"APPROVED FOR RELEASE: 09/17/2001 CIA-RDP86-00513R002201610016-2

USSR

VIL'NER, L. M., et al., Fiziologicheski i Opticheski Aktivnyye Polimernyye Veshchestva, "Zinatne," 1971, pp 137-144

of tickborne encephalitis virus with less than 100 LD_{50} dose of copolymers tested showed that VP with CA (No 20) and VP with MA (No 2) possessed high antiviral activity (95 and 60% of mice survived). This means that copolymers with polyanionic structure were the most effective. With respect to mol. wt. the most active copolymers were those with 50 ÷ 200,000 mol. wt. and with characteristic viscosity of ~0.24-0.5 in 0.02 N HCl. Thus, in the case of VP with CA and MA a possibility was established of inducing interferon-production in animal blood by chemical means. Results were negative with chicken embryos and with cell cultures of chicken and mouse embryos.

2/2

APPROVED FOR RELEASE: 09/17/2001 CIA-RDP86-00513R002201610016-2"

"APPROVED FOR RELEASE: 09/17/2001 CIA-RDP86-00513R002201610016-2

USSR

VAVILIN, G. I., VASIL'YEV, A. V., IL'INA, T. B., KROPACHEV, V. A., LAVRENT'YEVA, Ye. M., RABINOVICH, I. M., and TRUKHMANOVA, L. B., Institute of High-Molecular Compounds, Academy of Sciences USSR; State Scientific Research Institute of Tuberculosis, Ministry of Health of RSFSR; Leningrad Scientific Research Institute of Antibiotics, Ministry of Medical Industry USSR

"Use of Polymers for Modification of Antibacterial Preparations"

Riga, Fiziologicheski i Opticheski Aktivnyy Polimernyye Veshchestva, "Zinatne," 1971, pp 175-180

Abstract: Antibacterial preparations were modified by forming strong chemical bonds with polymers, and by protective coatings. Mixtures of p-aminosalicylic acid (PASA), streptomycin and hydrazine of isonicotinic acid (HINA) with polyvinyl alcohol (PVA) and polyvinylpyrrolidone (PVP), gels of iodopolyvinyl alcohol, as well as polymer preparations with PASA and HINA were studied. Coating of streptomycin, PASA, and HINA were accomplished with acetylphthalylcellulose (APC) and with its ammonium salt (NH_4-APC). All prepared antitubercular preparations preserved their potency in vitro for not less than 1 year. Therapeutic properties of PASA, tubaside, and streptomycin with polymers were tested on dogs and guinea pigs. The long-lasting effect of preparations depended first of all on the polymer-carrier, its mol. wt.,

1/2

APPROVED FOR RELEASE: 09/17/2001 CIA-RDP86-00513R002201610016-2"

"APPROVED FOR RELEASE: 09/17/2001 CIA-RDP86-00513R002201610016-2

USSR

VAVILIN, G. I., et al., Fiziologicheski i Opticheski Aktivnyye Polimernyye Veshchestva, "Zinatne," 1971, pp 175-180

and the method of administration into the animal organism. Best results were shown by polymers with mol. wt. of 50,000-60,000. Coating of tubaside, PASA, and streptomycin with APC and NH_4-APC eliminated some side effects, excessive production of gastric juices, increased tolerance by patients who could not take them without coatings, and prolonged effectiveness of all drugs tested. PASA pills with APC coating preserved their antimicrobial effect for 2 years (1.5 years for uncoated pills). Solubility of APC and NH_4-APC coatings in artificial gastric juices at pH 7.4 was 20 and 15 min, respectively, and 3 hr at pH 1.2. Some coated pills reached small intestine before being completely decomposed. NH_4-APC coatings were more penetrable by fluids than APC coatings.

2/2

APPROVED FOR RELEASE: 09/17/2001 CIA-RDP86-00513R002201610016-2"

"APPROVED FOR RELEASE: 09/17/2001 CIA-RDP86-00513R002201610016-2

1/2 020 UNCLASSIFIED PROCESSING DATE--20NOV70

TITLE--COPOLYMERIZATION OF CROTONIC DERIVATIVES OF ISONICOTINIC ACID HYDRAZIDE WITH VINYLPYRROLIDONE -U-

AUTHOR-(03)-ASCPACHEV, V.A., MAKKELOVA, T.M., TRUKHRANOVA, L.B.

COUNTRY OF INFO--USSR

SOURCE--VYSOKOMOL SOEDIN., SER. A 1970, 12(5), 1091-6.

DATE PUBLISHED--------70

SUBJECT AREAS--CHEMISTRY

TOPIC TAGS--COPOLYMERIZATION, CHEMICAL REACTION RATE, ORGANIC NITRILE COMPOUND, NICOTINIC ACID

CONTROL MARKING--NO RESTRICTIONS

DOCUMENT CLASS--UNCLASSIFIED

PROXY REEL/FRAME--3006/1374 STEP NO--UR/0459/70/012/005/1091/1096

CIRC ACCESSION NO--APX[illegible]

UNCLASSIFIED

APPROVED FOR RELEASE: 09/17/2001 CIA-RDP86-00513R002201610016-2"

"APPROVED FOR RELEASE: 09/17/2001 CIA-RDP86-00513R002201610016-2

2/2 020 UNCLASSIFIED PROCESSING DATE--20NOV70

CIRC ACCESSION NO--AP0135646

ABSTRACT/EXTRACT--(U) GP-0- ABSTRACT. THE COPOLYMN. OF N,VINYL,2,PYRROLIDONE (I) WITH N,ISONICOTINOYL,N',CROTONOYLHYDRAZINE (II) IN THE PRESENCE OF A,A'BISISOBUTYRONITRILE GAVE III. THE REACTIVITY RATIOS ARE 0.04 PLUS OR MINUS 0.04 FOR I AND 0.58 PLUS OR MINUS 0.02 FOR II. THE MAX. YIELD WAS 80PERCENT. THE SOLY. OF III IN WATER DECREASED WITH DECREASING NO. OF II UNITS IN THE CHAIN. III IS INSOL. IN WATER WHEN GREATER THAN OR EQUAL TO 26 MOLE PERCENT II UNITS ARE PRESENT. SIMILARLY, I WAS COPOLYMD. WITH N,ISONICOTINOYL,N'PRIME, CROTYLIDENEHYDRAZINE, BUT THE POLYMN. RATES WERE VERY SLOW AND ONLY SIMILAR TO 6PERCENT COPOLYMER WAS OBTAINED. FACILITY: INST. VYSOKOMOL. SOEDIN., LENINGRAD, USSR.

UNCLASSIFIED

APPROVED FOR RELEASE: 09/17/2001 CIA-RDP86-00513R002201610016-2"

"APPROVED FOR RELEASE: 09/17/2001 CIA-RDP86-00513R002201610016-2

USSR UDC 669.295.053.27

ANDREYEV, YE. A., MAL'SHIN, V. M., and KROPACHEV, V. K.

"Thermophysical Studies of Vacuum Processes for the Separation of Titanium Sponge"

V. sb. Vakuumn. protesessy v tsvetnn. metallurgii (Vacuum Processes in Non-ferrous Metallurgy -- Collection of Works), Alma-Ata, "Nauka," 1971, pp 166-170 (from Referativnyy Zhurnal -- Metallurgiya, No 6, Jun 71, Abstract No 6G195)

Translation of Abstract: The temperature field was investigated in a vacuum apparatus for the separation of Ti sponge. A method was proposed for the calculation of the length of the basic cycle of vacuum separation. Four illustrations, 9 bibliographic entries.

1/1

APPROVED FOR RELEASE: 09/17/2001 CIA-RDP86-00513R002201610016-2"

"APPROVED FOR RELEASE: 09/17/2001 CIA-RDP86-00513R002201610016-2

USSR UDC 547.853.7.07:539.183.2

SAVIN, YU. I., SINGIN, A. S., SAZONOV, N. V., KROPACHEVA, A. A., and SAFONOVA T. S., Scientific Research Institute of Medical Radiology, Academy Medical Sciences USSR, Obninsk; All Union Scientific Chemical-Pharmaceutical Institute imeni S. Ordzhonikidze, Moscow

"Synthesis of Phosphorus Tagged Diethyleneimide of Pyrimidyl-2-imidophosphoric Acid [Phosphemide]"

Riga, Khimiya Geterotsiklicheskikh Soyedineniy, No 9, Sep 73, pp 1251-1253

Abstract: The following synthetic route was selected for the synthesis of diethyleneimide of pyrimidyl-2-amidophosphoric acid [phosphemide] (I). From the reaction of equimolar quantities of 2-aminopyrimidine and phosphorus pentachloride in benzene 2-trichlorophosphazopyrimidine hydrochloride was obtained which was then converted to pyrimidyl-2-amidophosphoric acid dichloride by a reaction with 98% formic acid, which finally could be reacted without purification with ethyleneimine to yield I. Depending on the activity of the starting $^{32}PCl_5$ the specific activity of phosphemide-^{32}P was 5-10 μc per gram.

1/1

APPROVED FOR RELEASE: 09/17/2001 CIA-RDP86-00513R002201610016-2"

"APPROVED FOR RELEASE: 09/17/2001 CIA-RDP86-00513R002201610016-2

Organophosphorous Compounds

USSR UDC 543.51+661.718.1

SHAPIRO, A. B., KROPACHEVA, A. A., SUSKINA, V. I., ROMYNOV, E. V., and ROZANTSEV, E. G., Institute of Chemical Physics, Academy of Sciences USSR, and All-Union Institute of Pharmaceutical Chemistry imeni S. Ordzhonikidze

"Mass Spectrometric Study of Ethylenephosphoramide Paramagnetic Derivative"

Moscow, Izvestiya Akademii Nauk SSSR, Seriya Khimicheskaya, No 4, Apr 71, pp 864-867

Abstract: The authors synthesized previously unknown paramagnetic derivatives of 2,2,5,5-tetramethylpyrrolidine-1-oxyl-3-amido- and 2,2,6,6-tetramethyl-piperidine-1-oxyl-4-amidodiethyleneimidothiophosphoric acid and made a mass spectrometric study of their fragmentation by electron impact. A mechanism is suggested for the decay of molecular ions of ethylenephosphoramide paramagnetic derivatives.

1/1

APPROVED FOR RELEASE: 09/17/2001 CIA-RDP86-00513R002201610016-2"

"APPROVED FOR RELEASE: 09/17/2001 CIA-RDP86-00513R002201610016-2

USSR

UDC 615.277.3:546.185.225

SAZONOV, N. V., KNOPACHEVA, A. A., and SAFONOVA, T. S., All Union Scientific Chemical-Pharmaceutical Research Institute Imeni S. Ordzhonikidze, Moscow

"Diethyleneimides of Pyridyl-2-amidophosphoric Acids"

Moscow, Khimiko-Farmatsevticheskiy Zhurnal, Vol 5, No 1, Jan 71, pp 80-84

Abstract: In an attempt to synthesize novel antitumor agents, a series of acyl chlorides and diethyleneimides of pyridyl-2-amidophosphoric acid was obtained. A suspension of 3 g of 2-aminopyridine and 0.65 g HCl, in 50 ml benzene was refluxed for 2 hrs under a stream of nitrogen, cooled, filtered, washed with ether; 100 ml of ether was added to the precipitate and treated with 1.47 g anhydrous formic acid. After 12 hrs the precipitate was collected to give pyridyl-2-amidophosphoric acid chloride, m.p. 177-180°. Analogously 6-methylpyridyl-2-amidophosphoric acid chloride, m.p. 127-129° was obtained. To obtain the diethyleneimides of pyridyl-2-amidophosphoric acid, 5-nitropyridyl-2-amidophosphoric acid chloride was added with stirring and cooling to a mixture of ethyleneimine and triethylamine in benzene. The mixture was stirred 2 hrs and worked up to yield desired products.

1/1

APPROVED FOR RELEASE: 09/17/2001 CIA-RDP86-00513R002201610016-2"

"APPROVED FOR RELEASE: 09/17/2001 CIA-RDP86-00513R002201610016-2

Acc. Nr: AP0100364 Abstracting Service: CHEMICAL ABST. Ref. Code: UR 0409

111403q Pyrimidyl-4-amidophosphoric acid dichlorides. Sazonov, N. V.; Kropacheva, A. A. (Vses. Nauch.-Issled. Khim.-Farm. Inst. im. Ordzhonikidze, Moscow, USSR). *Khim. Geterotsikl. Soedin.* 1970, (1), 97-9 (Russ). Treatment of 4-(trichlorophosphazo)pyrimidines with HCO_2H is a general method for prepg. the title compds. (I). Thus, equimolar amts. of a 4-aminopyrimidine (II) and PCl_5 in a solvent heated under N until no more HCl was liberated and treated with an equimolar amt. HCO_2H in Et_2O at 15-20° gave the I (R^1, R^2, R^3,

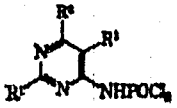

(I)

m.p. (recrystn. solvent), % yield, and m.p. hydrochloride given): Cl, H, Cl, 146-9° (C_6H_6), 96.2, —; MeO, H, Cl, 145-7° (decompn.) (Et_2O), 95.5, —; MeO, H, MeO, 151-2° (decompn.) (Et_2O), 92.4, —; Me, H, MeO, 176-7° (Et_2O), 77.2, —; H, Br, H, 172-4° (Me_2CO-Et_2O), 96, —; Me, Br, H, 180-83° (C_6H_6), 92, —; H, Br, Me, 170-71.5° (Et_2O), 88.5, —; Cl, H, H, —, 82.5, 147-50° (decompn.); Me, H, Me, —, 91, 164° (decompn.); Me, H, H, —, 89.2, 164-6° (decompn.); H, H, Me, 149-51°, 85, 185-6°, H, H, piperidino 176-7° (decompn.), 90.2, 162-3° (decompn.). All I undergo hydrolysis to give starting II upon heating.

Jaroslav Jonas

REEL/FRAME
19841784

APPROVED FOR RELEASE: 09/17/2001 CIA-RDP86-00513R002201610016-2"

"APPROVED FOR RELEASE: 09/17/2001 CIA-RDP86-00513R002201610016-2

1/3 008 UNCLASSIFIED PROCESSING DATE--13NOV70

TITLE--REACTION OF 2,AMINOPYRIDINES WITH PHOSPHORUS PENTACHLORIDE -U-

AUTHOR-(02)-SAZONOV, N.V., KROPACHEVA, A.A.

K

COUNTRY OF INFO--USSR

SOURCE--KHIM. GETEROTSIKL. SOEDIN. 1970, (1), 55-7

DATE PUBLISHED--------70

SUBJECT AREAS--CHEMISTRY, BIOLOGICAL AND MEDICAL SCIENCES

TOPIC TAGS--PYRIDINE, CHEMICAL REACTION, PHOSPHORUS CHLORIDE, HETEROCYCLIC BASE COMPOUND

CONTROL MARKING--NO RESTRICTIONS

DOCUMENT CLASS--UNCLASSIFIED

PROXY REEL/FRAME--1983/1367 STEP NO--UR/0409/70/000/001/0055/0057

CIRC ACCESSION NO--AP0054240

UNCLASSIFIED

APPROVED FOR RELEASE: 09/17/2001 CIA-RDP86-00513R002201610016-2"

"APPROVED FOR RELEASE: 09/17/2001 CIA-RDP86-00513R002201610016-2

2/3 008 UNCLASSIFIED PROCESSING DATE--13NOV70

CIRC ACCESSION NO--AP0054240

ABSTRACT/EXTRACT--(U) GP-0- ABSTRACT. FOR I-II THROUGHOUT: A, R EQUAL R PRIME2 EQUAL H, R PRIME1 EQUAL CL; B, R EQUAL R PRIME2 EQUAL H, R PRIME1 EQUAL BR; C, R EQUAL R PRIME2 EQUAL H, R PRIME1 EQUAL I; D, R EQUAL R PRIME2 EQUAL H, R PRIME1 EQUAL NH SUB2; E, R EQUAL H, R PRIME1 EQUAL R PRIME2 EQUAL CL; F, R EQUAL R PRIME1 EQUAL R PRIME2 EQUAL H; AND G, R EQUAL ME, R PRIME1 EQUAL BR, R PRIME2 EQUAL H. A SUSPENSION OF 1.5 G 2,AMINO,5,CHLOROPYRIDINE AND 2.43 G PCL SUB5 IN 30 ML C SUB6 H SUB6 WAS REFLUXED 2 HR IN N WITH CONST. STIRRING TO GIVE A SOLN. OF 2,TRICHLOROPHOSPHAZO,5,CHLOROPYRIDINE; TO THIS WAS ADDED WITH COOLING (10-15DEGREES) 4.07 G MORPHOLINE IN 20 ML C SUB6 H SUB6, AND THE MIXT. STIRRED 3 HR AT 20DEGREES TO GIVE 82PERCENT IA, M. 77-9DEGREES. SIMILARLY PREPD. WERE (PERCENT YIELD AND M.P. GIVEN): IB, 92.3, 101-2DEGREES; IC, 82.8, 121-2DEGREES; ID, 97.5, 107-8DEGREES; AND IE, 92, 117-19DEGREES. A SUSPENSION OF 1.5 G 2,AMINOPYRIDINE AND 3.32 G PCL SUB5 IN 40 ML C SUB6 H SUB6 WAS REFLUXED 2 HR UNDER N WITH STIRRING, FILTERED TO GIVE 3.91 G 2,TRICHLOROPHOSPHAZOPYRIDINE-HCL, WHICH WAS SUSPENDED IN 100 ML ET SUB2 O, COOLED (10-15DEGREES) 6.4 G MORPHOLINE IN 20 ML ET SUB2 O ADDED, AND THE MIXT. STIRRED 30 MIN AT 15DEGREES AND 3 HR AT 20DEGREES, THEN LEFT OVERNIGHT TO GIVE 54PERCENT IF, M. 77-8DEGREES. ON STANDING IN AIR IA-F ARE SLOWLY HYDROLYZED. A SUSPENSION OF 5 G IA IN 50 ML ETOH WAS REFLUXED 45 MIN TO GIVE 86.4PERCENT IIA, M. 147-8 (ETOAC).

UNCLASSIFIED

APPROVED FOR RELEASE: 09/17/2001 CIA-RDP86-00513R002201610016-2"

"APPROVED FOR RELEASE: 09/17/2001 CIA-RDP86-00513R002201610016-2

3/3 006 UNCLASSIFIED PROCESSING DATE--13NOV70

CIRC ACCESSION NO--AP0054240

ABSTRACT/EXTRACT--SIMILARLY PREPD. WERE (M.P. AND PERCENT YIELD GIVEN): IIB, 177-5-8.5DEGREES (ETOAC), 76.8; IIC, 198-9DEGREES (MEOH), 93.7; IID, 121-2DEGREES (ETOAC), 68.8; IIE, 147.5-48DEGREES (ETOAC), 94.5; IIF, 156-7DEGREES (ETOAC), 89; ADN IIG, 174.5-75DEGREES (C SUB6 H SUB6), 80.5.

UNCLASSIFIED

APPROVED FOR RELEASE: 09/17/2001 CIA-RDP86-00513R002201610016-2"

"APPROVED FOR RELEASE: 09/17/2001 CIA-RDP86-00513R002201610016-2

KROPISNOV M.K.

Acc. Nr. AA0108722 Abstracting Service: 3-70 Ref. Code: UR 0482

Soviet Inventions Illustrated, Section II Electrical, Derwent,

244352 ROLL PELLETISER to produce hard alloys from powder comprises smooth sprung metal rolls (1) enclosed by a cowl (3) with a bin (4) at the top and a portioner (5). A rubber sleeve (7) in the channel (4) connects to the uppers of a vibro-screen (8) carried on shock absorbers (9). Above the screen deck is an intermediate deck (10) with paddle. The two screen decks are enclosed together with a channel (12). A bin (13) below the screen (8) has a vibrator (14) and worm (15) to feed the rolls.

27.5.63 as 838490/22-2. PARFENOV.F.I., A.P. CHERNOZUBOV. V.P. MELNIKOV et al. (9.10.69) Bul 18/28.5.69. Class 18a. Int.Cl. C 21 b.

AUTHORS: Parfenov, F. I.; Chernozubov, A. P.; Mel'nikov, V. P.; Kropisnov, M. K.; Yakovlev, V. P.; Nelidov, M. A.

18

1/2

REEL/FRAME
19900498

APPROVED FOR RELEASE: 09/17/2001 CIA-RDP86-00513R002201610016-2"

"APPROVED FOR RELEASE: 09/17/2001 CIA-RDP86-00513R002201610016-2

Acc. Nr.: AA0108722

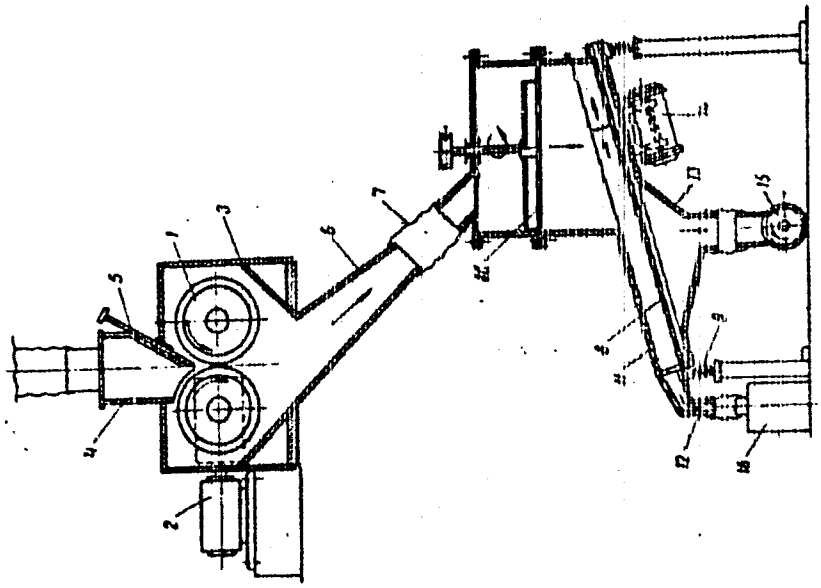

Reel/Frame

2/2

BS

19900499

APPROVED FOR RELEASE: 09/17/2001 CIA-RDP86-00513R002201610016-2"

"APPROVED FOR RELEASE: 09/17/2001 CIA-RDP86-00513R002201610016-2

USSR UDC: 621.391.883.2

ZAYTSEV, V. A., KROPIVNITSKIY, A. D.

"Theoretical Study of the Effect of Interference on Structured Signal Parametric Filters"

V sb. Materialy Nauch.-tekhn. konf. Leningr. radiotekhn. in-t svyazi. Vyp. 1 (Materials of the Scientific and Technical Conference of Leningrad Electrical Engineering Institute of Communications--collection of works, No 1), Leningrad, 1971, pp 50-56 (from RZh-Radiotekhnika, No 3, Mar 72, Abstract No 3A36)

Translation: The paper discusses passage of signals and interference through structured-signal parametric filters for FM and AM-FM waveforms and gives the calculation of their interference immunity. Resumé.

1/1

APPROVED FOR RELEASE: 09/17/2001 CIA-RDP86-00513R002201610016-2"

"APPROVED FOR RELEASE: 09/17/2001 CIA-RDP86-00513R002201610016-2

USSR UDC: 621.391.81

ZAYTSEV, V. A., [redacted]

"Some Results of an Experimental Study of the Effect of Interference on a Structured-Signal Parametric Filter"

V sb. Materialy Nauch.-tekhn. konf. Leningr. elektrotekhn. in-t svyazi. Vyp. 1 (Materials of the Scientific and Technical Conference of Leningrad Electrical Engineering Institute of Communications--collection of works, No 1), Leningrad, 1971, pp 56-62 (from RZh-Radiotekhnika, No 3, Mar 72, Abstract No 3A57)

Translation: The paper presents the results of an experimental study of a structured-signal parametric filter for FM signals. Transmission of spectrum-lumped and time-lumped jitter is considered. Experimental and theoretical results are compared. Resumé.

1/1

APPROVED FOR RELEASE: 09/17/2001 CIA-RDP86-00513R002201610016-2"