"APPROVED FOR RELEASE: 09/17/2001 CIA-RDP86-00513R002201620004-4

USSR UDC 621.791.1:546.26-162:546.821

KAZAKOV, N. F., KRYUCHKOVA, V. P., ZAZOVSKIY, D. G., and VERNYY, V. A.

"Graphite and Titanium Diffusion Welding in a Vacuum"

Kiev, Avtomaticheskaya Svarka, No 2, Feb 71, pp 70-71

Abstract: Results are given of experiments designed to ascertain the optimal modes of welding titanium to graphite. Specimens of the two original metals measured 80 x 50 x 20 mm for Ti and 50 x 50 x 20 mm for the graphite, and were welded together in the SDVU-8M diffusion vacuum machine at a temperature of 1100° C obtained from an LZ-67 high-frequency oscillator with an output power of 60 kW and a frequency of 66-74 kHz. The temperature was controlled by a KhA thermocouple. Metallographic analysis after the welding process was completed showed that complete melting occurred at the point of contact of the metals, and that damage resulting from the mechanical testing was restricted to the graphite. The low resistance to a d-c current passed through the weld indicated its high quality.

1/1

APPROVED FOR RELEASE: 09/17/2001 CIA-RDP86-00513R002201620004-4"

"APPROVED FOR RELEASE: 09/17/2001 CIA-RDP86-00513R002201620004-4

USSR UDC: 621.396.6-181.5(088.8)

TOCHITSKIY, Ya. I., MAL'TO, V. I., KRYUK, I. P.

"A Device for Registering a Phototemplate With a Substrate"

USSR Author's Certificate No 263011, filed 19 Aug 68, published 8 Jun 70 (from RZh-Radiotekhnika, No 6, Jun 71, Abstract No 6V207 P)

Translation: A device is proposed for registering a phototemplate with a substrate. The device contains a fixed base, a micromanipulator, and a recess with a spherical segment which carries the substrate. To improve the precision of registration, the recess is made in an armature connected to a spring-loaded frame by means of guides made in the form of double parallelograms equipped with elastic hinges. Inside the armature is a plunger with pneumatic stopper.

1/1

APPROVED FOR RELEASE: 09/17/2001 CIA-RDP86-00513R002201620004-4"

"APPROVED FOR RELEASE: 09/17/2001 CIA-RDP86-00513R002201620004-4

Radiation Chemistry

UDC 548.3

USSR

MINTS, R. I., MIL'MAN, I. I., KRYUK, V. I., and TARASOV, L. S., Ural Polytechnical Institue, Sverdlovsk, and Institute of Geochemistry and Analytical Chemistry imeni I. V. Vernadskiy, Academy of Sciences USSR, Moscow

"Exoelectronic Emission of Particles of Lunar Anorthosite Rocks Supplied by the Automatic Station 'Luna-20'"

Moscow, Geokhimiya, No 5, May 73, pp 683-688

Abstract: The experiments carried out showed that particles of the lunar anorthosite rocks recovered by the lunar automatic station "Luna-20" possess natural exoelectronic emission. The characteristics of this electronic emission is related to the structural state of the fragments under investigation. With increased degree of recrystallization the number of emission peaks increases, especially of the high temperature peaks. This is accompanied by increased activation energy of the electron ejection. The exoemission parameters (such as temperature, location, number and intensity of the emission peaks, activation energy of the process) lead to an assumption that close to the surface of anorthosite particles there exist structural irregularities which differ by their energetic stability.

1/1

APPROVED FOR RELEASE: 09/17/2001 CIA-RDP86-00513R002201620004-4"

"APPROVED FOR RELEASE: 09/17/2001 CIA-RDP86-00513R002201620004-4

USSR UDC: 621.311.001.2.003.1

KOKHOV, V. I., [redacted], MARKOVICH, I. M., Moscow

"Optimization Models for Development of Electric Power Systems and System Mergers"

Moscow, Izv. AN SSSR: Energetika i Transport, No 3, May/Jun 72, pp 3-11

Abstract: The authors consider three types of optimization models of development of electric power systems: utilizing a previously developed model of the estimation type, a block optimization model, and a global model. Their advantages and disadvantages are compared. The results of the analysis show that an optimization model should be developed which utilizes the estimation model as a sub-block. The problem of selecting variants of the development of power plants in a power supply system is mathematically formulated, and an algorithm is devised for solving this problem, utilizing the method of branches and boundaries.

1/1 - END -

CSO: 1860-H

APPROVED FOR RELEASE: 09/17/2001 CIA-RDP86-00513R002201620004-4"

"APPROVED FOR RELEASE: 09/17/2001 CIA-RDP86-00513R002201620004-4

USSR UDC: 62-225-752

PANKOV, N. P., KRYUKOV, A. I.

"Effect of Axial Force on the Frequency Characteristic of Compensated Connection Lines in an Aircraft Engine"

Tr. Ufim. aviats. in-ta (Works of the Ufa Aviation Institute), 1970, vyp. 14, pp 3-8 (from RZh-Aviatsionnyye i raketnyye dvigateli, No 3, Mar 71, Abstract No 3.34.28)

Translation: The natural frequencies of tubing with a displacement compensator are appreciably dependent on the axial force which develops in the connecting lines when compensating for installation and thermal displacements, as well as under the effect of the pressure of the working fluid. Analytical equations are derived which can be used to account for the effect of axial loading on the frequency characteristics of compensated connecting lines in an aircraft engine. Two illustrations. Resumé.

1/1

APPROVED FOR RELEASE: 09/17/2001 CIA-RDP86-00513R002201620004-4"

"APPROVED FOR RELEASE: 09/17/2001 CIA-RDP86-00513R002201620004-4

4

USSR

UDC 621.391.2

ALEKSEYEV, V. A., ANTONETS, M. A., GATELYUK, E. D., ZHIVOTA, P. S., IVANOV, B. S., KRYUKOV, A. YE., TIKHONOV, YU. A., YANKAVTSEV, N. V.

"Interference Correlometer using a Digital Computer"

Moscow, Radiotekhnika i elektronika, Vol XVII, No 2, 1972, pp 332-339

Abstract: Specific problems connected with the construction of a correlation detection system in which the receivers are located at a distance excluding the possibility of direct coupling with the correlator are discussed. The problems of constructing the interference correlometer with recording of the investigated signals at each point on magnetic tapes and calculation of the correlation function on a digital computer are considered. The peculiarities of calculating the correlation function connected with the application of superheterodyne receivers are noted, and results are presented from laboratory checking of the system. Satisfactory coincidence of the experimental and theoretical results was obtained. For 10 kilohertz $\leq F \leq 75$ kilohertz and $T = 30$ seconds, the correlation gain of the developed system $Q = 1000$. The investigated system can also be used for autocorrelation and cross correlation analysis of processes represented by electric signals and for spectral analysis of signals represented in analog form for multilevel quantization at a digital computer input.

1/1

APPROVED FOR RELEASE: 09/17/2001 CIA-RDP86-00513R002201620004-4"

"APPROVED FOR RELEASE: 09/17/2001 CIA-RDP86-00513R002201620004-4

USSR

KUTUZOV, B. N., KRYUKOV, G. M., GABDRAKIMANOV, S. B.

"Methods and Results of Experimental Studies of Mechanical Properties of Rock at High Deformation Rates"

Termomekh. Metody Razrusheniya Gorn. Porod. Ch. 1. [Thermomechanical Methods of Rock Destruction, Part 1 -- Collection of Works], Kiev, Nauk. Dumka Press, 1972, pp 28-33, (Translated from Referativnyy Zhurnal, Mekhanika, No 10, 1972, Abstract No 10 V729, by Ye. I. Shemyakin).

Translation: Cylindrical specimens 30-42 mm in diameter and two to four diameters high were studied on an installation for monaxial dynamic deformation of rock at deformation rates $\dot{\varepsilon}$ of up to 500 sec^{-1}. The experiments showed that the modulus of elasticity is independent of deformation rate and corresponds to the dynamic modulus determined by the ultrasonic method in the range of change of $\dot{\varepsilon}$ from 30 to 500 sec^{-1}. It was established that, in contrast to the modulus of elasticity, the strength characteristics of rock depend significantly on the deformation rate. With $\dot{\varepsilon}$ = 500-600 sec^{-1}, the strengths of the rocks studied in monaxial compression increased by 5-7 times over their static values, reaching approximately 0,01 E_2; the rise rate of strength decreases with increasing deformation rate. 6 Biblio. Refs.

1/1

APPROVED FOR RELEASE: 09/17/2001 CIA-RDP86-00513R002201620004-4"

"APPROVED FOR RELEASE: 09/17/2001 CIA-RDP86-00513R002201620004-4

2

USSR UDC 621.373.826

AKIMOV, YU. A., BUROV, A. A., GOVORKOV, O. I., KRYUKOV, E. V., RODICHENKO, G. V., STEPANOV, B. M.

"KGP-1M Semiconductor Quantum Generator with Electron Excitation"

V sb. Ispol'z. optich. kvant. generatorov v sovren. tekhn. i med. Ch. 2-3 (Utilization of Lasers in Modern Engineering and Medicine. Parts 2-3--collection of works), Leningrad, 1971, pp 15-20 (from RZh-Radiotekhnika, No 1, 1972, Abstract No 1D376)

Translation: The KGP-1M laser designed for generation of a series of radiation pulses with the interferometric and shadow methods of investigating the optical inhomogeneities is described. The basic characteristics of the laser are as follows: The radiation pulse duration is 10 nanoseconds to 1 microsecond, the repetition rate is 100 hertz to 1 hertz, the radiation power is 100 watts to 1 watt. When operating in the pulse mode, the packet repetition rate is 100 hertz, the number of pulses per packet is 20-30, the pulse repetition rate in the packet is 100 megahertz to 1 gigahertz, the duration of the light pulses is 1-0.1 nanoseconds, and the radiation power per pulse is 100 watts. As the working medium of the semiconductor target, n-type gallium arsenide alloyed with Te is used with an impurity concentration of $1\text{-}3\cdot10^{18}$ cm^{-3}. At the temperature of liquid nitrogen, λ = 0.084-0.86 microns. There are 4 illustrations and a 3-entry bibliography.

1/1

APPROVED FOR RELEASE: 09/17/2001 CIA-RDP86-00513R002201620004-4"

"APPROVED FOR RELEASE: 09/17/2001 CIA-RDP86-00513R002201620004-4

USSR UDC 531.76/77

RYAPOLOV, V. A., KRYUKOV, L. V., KULIKOV, S. V., CHISTYAKOV, B. V., PERFIL'YEV, L. M., and OREL-KHOMYAKOV, G. A.

"A Device for Indicating the Direction of Rotation of a Stepping Motor"

USSR Author's Certificate No 363922 Kl G 01 p 13/00, filed 17 Oct 70, published 21 Mar 73 (from RZh Avtomatika Telemekhanika i Vychislitel'naya Tekhnika, No 11, Nov 73, abstract No 11 A 387P)

Translation: A device is proposed for indicating the direction of rotation of a stepping motor, containing a differentiating element and valves. To simplify and improve the reliability of the apparatus, one of the valve inputs is connected to each phase winding of the step motor; the other input is connected through the differentiating element to the following phase winding of the stepping motor, while the outputs of the valves are combined and connected to the output terminal. One illustration.

1/1

APPROVED FOR RELEASE: 09/17/2001 CIA-RDP86-00513R002201620004-4"

"APPROVED FOR RELEASE: 09/17/2001 CIA-RDP86-00513R002201620004-4

USSR UDC 621.373.531.1(088.8)

KULIKOV, S. V., RYAPOLOV, V. A., KRYUKOV, L. V., CHISTYAKOV, B. V.

"Multivibrator with a Synchronization Circuit"

USSR Author's Certificate No 251614, Filed 27 Jun 68, Published 3 Feb 70 (from RZh-Radiotekhnika, No 9, Sep 70, Abstract No 9G255P)

Translation: This author's certificate introduces a multivibrator with a synchronization circuit containing basic and auxiliary transistors, switching and starting transistors, a stabilitron and the synchronization circuit resistors. In order to decrease the delay of the synchronized pulses, the base of one of the basic transistors is connected to the collector of the switching transistor of the synchronization circuit. The base of the latter is connected via a resistor to the collector of the starting transistor and via a semiconductor diode to the collector of the second transistor of the multivibrator the base of which is connected via the stabilitron and the resistor to a common point of the semiconductor diode and the collector of the starting transistor of the synchronization circuit.

1/1

APPROVED FOR RELEASE: 09/17/2001 CIA-RDP86-00513R002201620004-4"

"APPROVED FOR RELEASE: 09/17/2001 CIA-RDP86-00513R002201620004-4

USSR

UDC 621.375.82

KRYUKOV, P. G., MATVEYETS, YU. A., SENATSKIY, YU. V., FEDOSIMOV, A. I., CHEKALIN, S. V., and SHATBERASHVILI, O. B.

"On Mechanisms for Radiation Energy and Power Limitation During the Amplification of Ultrashort Pulses in Neodymium Glass Lasers"

V sb. Kvant. elektronika (Quantum Electronics -- Collection of Works), No 2(14), Moscow, "Sov. Radio," 1973, pp 102-105 (English summary) (from RZh-Fizika, No 10, Oct 73, Abstract No 10D834 from authors' abstract)

Translation: It is shown that a limitation of the energy and power of ultrashort pulses during amplification in Nd glass lasers sets in as a result of the nonlinear interaction of the laser radiation with the optical medium of the laser itself. Emerging as limitation mechanisms here are breakdowns due to self-focusing in the case of the propagation of light beams close to parallel through the amplifier, and spectrum broadening and radiation scattering in the case of divergent beams.

1/1

APPROVED FOR RELEASE: 09/17/2001 CIA-RDP86-00513R002201620004-4"

"APPROVED FOR RELEASE: 09/17/2001 CIA-RDP86-00513R002201620004-4

USSR

UDC: 533.9...16

BASOV, N. G., ZARITSKIY, A. R., ZAKHAROV, S. D., KRYUKOV, P. G., MATVEYETS, Yu. A., SENATSKIY, Yu. V., FEDOSIMOV, A. I., CHEKALIN, S. V.

"Producing High-Power Light Pulses on Wavelengths of 1.06 and 0.53 μm and Using Them to Heat a Plasma. II. A Neodymium Glass Laser With Conversion of Emission to the Second Harmonic"

Moscow, Kvant. elektronika--sbornik (Quantum Electronics--collection of works), "Sov. radio", 1972, pp 50-55 (from RZh-Fizika, No 6, Jun 73, abstract No 6G375)

Translation: Investigations of processes of heating by means of laser sources with different wavelengths are of considerable importance for explaining mechanisms of energy transfer in laser heating of a plasma. This paper tells of the development of a high-power light source for heating experiments with emission on two wavelengths: the wavelength of a neodymium laser (1.06 μm) and its second harmonic (0.53 μm). An efficiency of greater than 50% in converting 1.06-μm emission to the second harmonic is achieved in a KDP crystal. The emission energy on the 0.53-μm wavelength is 10 j with a pulse duration of 1.0 ns. Part I, see RZhFiz, 1973, 5G239.

1/1

APPROVED FOR RELEASE: 09/17/2001 CIA-RDP86-00513R002201620004-4"

"APPROVED FOR RELEASE: 09/17/2001 CIA-RDP86-00513R002201620004-4

USSR UDC 621.378.325 + 535.46

BASOV, N.G., ZARIPSKIY, A.R., ZAKHAROV, S.D., KRYUKOV, P.G., [illegible], YU.A., SENATSKIY, YU.V., FEDOSIMOV, A.I., CHEKALIN, S.V.

"Achievement Of Powerful Light Pulses At A Wavelength Of 1.06 And 0.53 Microns And Their Use For Plasma Heating. II--Nd-Glass Laser With Conversion Of Radiation To The Second Harmonic"

Kvantovaya elektronika (Quantum Electronics), Moscow, No 6(18), 1972, pp 50-[illegible]

Abstract: The construction is described and the characteristics presented of a multistage Nd-glass laser. The laser assembly consists of the following: 1) Active elements of GLS-1 neodymium glass, 700 mm long with ends cut at a Brewsterian angle; 2) Resonator mirror; 3) Cells with steering resonator; 4) Aperture diaphragms; 5) Selectors of longitudinal type of oscillations in oscillator; 7) Lenses; and 8) Electrooptical gate with a laser discharger. A driving oscillator assembled according to the scheme of an oscillator with self-synchronization of modes serves as the source of short light pulses in the device. The length of the oscillator resonator, formed by two mirrors with reflection coefficients of 100 and 25 percent, amounts to [illegible] m. Cells with a nonlinear absorber -- a solution of No. 5955 dye in nitrobenzene -- were in contact with an opaque mirror. Two selectors of axial modes in the form of

1/2

APPROVED FOR RELEASE: 09/17/2001 CIA-RDP86-00513R002201620004-4"

"APPROVED FOR RELEASE: 09/17/2001 CIA-RDP86-00513R002201620004-4

USSR

BASOV, N.G., et al, Kvantovaya elektronika, Moscow, No 6(12), pp [illegible]

inclined Fabry-Perot interferometers were used for narrowing of the generation spectrum. With the aid of these interferometers the generation spectrum was narrowed to ~0.05 Å and in so doing the pulses emitted by the oscillator were expanded to 1 nanosec. In the KDP crystal the radiation at the output is converted into a second harmonic with an efficiency greater than [illegible] percent. The radiation energy at a 0.55 micron wavelength amounts to 10 joule. The authors thank M.F. Stel'makh, I.S. Rem, A.I.Kovrigin, and V.F.Polev for assistance in conducting experiments with KDP crystals. 5 ill. 16 ref. Received by editors, 25 Oct 1971.

2/2

- 7[illegible] -

APPROVED FOR RELEASE: 09/17/2001 CIA-RDP86-00513R002201620004-4"

"APPROVED FOR RELEASE: 09/17/2001 CIA-RDP86-00513R002201620004-4

USSR

UDC 543.46 + 621.375.325

BASOV, N.G., ZARITSKIY, A.R., ZAKHAROV, S.D., KROKHIN, O.N., KRYUKOV, P.G., MATVEYETS, YU.A., SENATSKIY, YU.V., FEDOSIMOV, A.I.

"Achievement Of Powerful Light Pulses At 1.06 And 0.53 Micron Wavelengths And Their Use For Plasma Heating. I. Experimental Study Of The Processes Of Radiation Reflection During Laser Heating Of Plasma At Two Wavelengths"

Kvantovaya elektronika (Quantum Electronics), Moscow, No 5(11), 1972, pp 65-71

Abstract: The experimental results are presented of calorimetric, temporal, spectral and polarization measurements of radiation reflected back from plasma which is heated by nanosecond laser pulses with a wavelength of 1.06 and 0.53 micron with fluxes at targets of various materials exceeding 10^{14} watt/cm^2. The results discussed represent the first attempt to study laser heating of plasma which is produced at solid targets in the green region of the spectrum. It is found that plasma absorption of the heating light at a 0.53 micron wavelength is three times greater than at a 1.06 micron wavelength. The authors express their appreciation to V.B. Rozanov for discussion of the results of the work. 3 fig. 19 ref. Received by editors, 25 Oct 1971.

1/1

APPROVED FOR RELEASE: 09/17/2001 CIA-RDP86-00513R002201620004-4"

"APPROVED FOR RELEASE: 09/17/2001 CIA-RDP86-00513R002201620004-4

USSR

UDC: 621.378.9:533.9.02

ZARITSKIY, A. R., ZAKHAROV, S. D., KRYUKOV, P. G., FEDOSIMOV, A. I.

"Measuring the Polarization of Back-Scattered Radiation Accompanying Laser Heating of a Plasma"

Moscow, Kvantovaya Elektronika, Sbornik Statey, No 2(8), 1972, pp 89-90

Abstract: When a plasma is heated by powerful laser emission with the use of solid targets, the laser light is strongly back-scattered. Polarization measurements are made on a wavelength of 530 nm using polaroid films; the degree of polarization of the reflected emission comes to 90-95%. Bibliography of three titles.

1/1

APPROVED FOR RELEASE: 09/17/2001 CIA-RDP86-00513R002201620004-4"

"APPROVED FOR RELEASE: 09/17/2001 CIA-RDP86-00513R002201620004-4

USSR

UDC: None

KRYUKOV, P. G., MATVEYETS, Yu. A., CHEKALIN, S. V., and SHATBERASHVILI, O. B.

"Forming Ultrashort Laser Pulses With a Two-Component Medium"

Moscow, Pis'ma v Zhurnal Eksperimental'noy i Teoreticheskoy Fiziki, vol 16, No 3, 1972, pp 117-120

Abstract: The purpose of this letter is to investigate the possibility of forming single ultrashort laser pulses using a medium which amplifies and is a nonlinear absorber with fast relaxation time in the light-transmission state. Since such a medium is absorbent for weak signals and amplifying for strong, powerful amplification, discrimination is exerted on the input pulse. If the relaxation time for the absorber is low enough, the already short pulse derived from a laser with autosynchronization can be made even shorter. A diagram of the experimental arrangement for this investigation is given and comparison diagrams of the pulse before and after passage through the two-component medium are shown. Associated with the P. N. Lebedev Physics Institute of the USSR Academy of Sciences, the authors express their gratitude to S. A. Churilova, A. N. Zherikhin, and Ye. V. Kurganova for their assistance with the experimental work.

1/1

APPROVED FOR RELEASE: 09/17/2001 CIA-RDP86-00513R002201620004-4"

"APPROVED FOR RELEASE: 09/17/2001 CIA-RDP86-00513R002201620004-4

USSR

UDC: 621.378.325

BYKOVSKIY, N. Ye., KAN, V., ERYUKOV, [redacted] G., MATVEYETS, Yu. A., NI, N. I., SENATSKIY, Yu. V., and CHEKALIN, S. V.

"Increasing the Energy Ratio of Ultrashort Laser Pulses to Noise"

Moscow, Kvantovaya elektronika, No 7, 1972, pp 68-70

Abstract: The purpose of this paper is to investigate the contrast, i.e., the ratio of the basic pulse energy to the background noise radiation energy, of a laser generating ultrashort pulses. The laser considered uses neodymium glass. In real lasers, the limiting contrast is reached not because of the nonlinear losses in the interaction of the radiation with the optical material of the laser equipment, as some researchers insist, but for other reasons. These losses weaken the most intense of the pulses, and consequently reduce the contrast. This brief communication demonstrates how these losses can be reduced in exchange for a reduction in the energy density of the resonator. The theory behind this procedure is presented, and the schematic of an amplifier for the laser in a stable two-component medium is reproduced. Estimates, made from oscillograms, indicated that the contrast was at least doubled by this device.

1/1

APPROVED FOR RELEASE: 09/17/2001 CIA-RDP86-00513R002201620004-4"

"APPROVED FOR RELEASE: 09/17/2001 CIA-RDP86-00513R002201620004-4

USSR

ZARITSKIY, A. R., ZAKHAROV, S. D., KRYUKOV, P. G., MATVEYETS, YU. A., and FEDOSIMOV, A. I., Physics Institute imeni P. N. Lebedev, Academy of Sciences USSR

"Variations in Back-Scattered Radiation Spectrum During Laser Heating of Plasma"

Moscow, Pis'ma v Zhurnal Eksperimental'noy i Teoreticheskoy Fiziki, Vol 15, No 4, 20 Feb 72, pp 184-186

Abstract: It is known that strong back-scattering of laser light occurs during the high-power laser radiation heating of a plasma with the use of solid targets. The authors measured the spectrum of the laser light reflected by the plasma. The targets used were LiD, $(CD_2)_n$, heavy ice, Al. The radiation source was a self-mode-locking Nd laser consisting of a master oscillator and a six-stage amplifier. The plasma heating and spectral measurements were carried out on the fundamental frequency (λ = 1.06 microns), as well as on the second harmonic frequency (λ = 0.53 micron). The measurements were

APPROVED FOR RELEASE: 09/17/2001 CIA-RDP86-00513R002201620004-4"

"APPROVED FOR RELEASE: 09/17/2001 CIA-RDP86-00513R002201620004-4

USSR

ZARITSKIY, A. R., et al., Pis'ma v Zhurnal Eksperimental'noy i Teoreticheskoy Fiziki, Vol 15, No 4, 20 Feb 72, pp 184-186

made on a grating spectrograph with f = 130 cm. The back-scattered radiation spectrum was found to have a large number of equidistant lines, situated generally both in the Stokes and the anti-Stokes part of the spectrum. This is due to the presence at the line of incident radiation from weak satellites, the distance between which equals the interval between the lines of reflected light. The observed process is of a stimulated character. Its explanation may be related to the phase modulation of high-power light pulses in the plasma layer.

2/2

APPROVED FOR RELEASE: 09/17/2001 CIA-RDP86-00513R002201620004-4"

"APPROVED FOR RELEASE: 09/17/2001 CIA-RDP86-00513R002201620004-4

USSR UDC: 621.385:530.145-6:53

BASOV, N. G., ZAKHAROV, S. D., KROKHIN, O. N., KRYUKOV, P. G., SENATSKIY, Yu. V., CHEKALIN, S. V., FEDOSIMOV, A. I., SHCHELEV, M. Ya.

"Investigation of Heating of a Plasma Formed by Ultrashort Laser Pulses"

Kratk. soobshch. po fiz. (Brief Reports on Physics), 1970, No 8, pp 48-52 (from RZh-Radiotekhnika, No 12, Dec 70, Abstract No 12D464)

Translation: In order to form a plasma, ultrashort pulses of emission from a neodymium glass laser operating under conditions of self-synchronization of modes on a wavelength of 1.06 μ were focused on a target of LiD in a vacuum. The period between pulses was 15 nsec. The individual laser pulse is not simple, but rather consists of a series of peaks, the interval between them and the number of peaks varying from flash to flash. The overall pulse duration reaches 10 nsec, the duration of an individual peak being in the range of 10^{-11}-10^{-12} s. The output energy is ~0.1 J. The diameter of the focal spot on the target is $2 \cdot 10^{-2}$ cm. Heating of the plasma was studied by the methods of shadow photography and schlieren photography. A. K.

1/1

APPROVED FOR RELEASE: 09/17/2001 CIA-RDP86-00513R002201620004-4"

"APPROVED FOR RELEASE: 09/17/2001 CIA-RDP86-00513R002201620004-4

UDC 621.378.9:533.9.02

USSR

BASOV, N. G., ZAKHAROV, S. D., KROKHIN, O. N., KRYUKOV, P. G., SENATSKIY, Yu. V., TYURIN, Ye. L., FEDOSIMOV, A. I., CHEKALIN, S. V., SHCHEBLEV, M. Ya.

"Studies of a Plasma Formed by Ultrashort Laser Pulses"

Moscow, Kvantovaya Elektronika, No. 1, 1971, pp 4-28

Abstract: Experimental studies of processes occurring in the high-temperature heating of a plasma by focusing ultrashort laser radiation on the surface of lithium deuteride are described. Studies of plasma heating with laser radiation of duration 10^{-11}-10^{-12} sec were begun in 1968 at the Laboratory of Quantum Radiophysics of the Physics Institute imeni P. N. Lebedev. Fast neutrons were recorded upon focusing these pulses on the surface of a lithium deuteride target, indicating the rise of conditions for a thermonuclear db-reaction and for obtaining a plasma of high temperature and density. Subsequent research raised the following questions: how does absorption of energy by a solid occur if the laser radiation is concentrated in a pulse with a duration of several picoseconds? How is the strong reflection of laser radiation from the target explained? What are the possibilities of raising ion temperature, and consequently neutron yield, in

USSR

APPROVED FOR RELEASE: 09/17/2001 CIA-RDP86-00513R002201620004-4"

"APPROVED FOR RELEASE: 09/17/2001 CIA-RDP86-00513R002201620004-4

BASOV, N. G., et al, Kvantovaya Elektronika, No. 1, 1971, pp 4-28

heating a plasma with ultrashort pulses? Shadow photographs of the plasma with illumination by ultrashort pulses and the recording of plasma dispersion with the aid of an electron-optical converter are described. The same electron-optical converter was used to study the change in the reflection of laser pulses with time, and x-ray measurements were made of the electron temperature of the plasma. A review of the basic experimental data indicates that the results are from laser pulses consisting not of one, but of several subpulses. Experiments show that the interaction of each subpulse with the target is not the same but a function of the previous history and repetition time of the subpulse relative to the beginning of the process. Heating of the plasma occurs as follows: one of the first subpulses incident on the target ionizes it to a depth approximately equal to the wavelength of the laser radiation. When the value of n_e becomes comparable to the value of n_{cr}, the remaining part of the subpulse is reflected. Heating of the plasma to a temperature of several electron-volts occurs simultaneously with ionization. As a result, the plasma formed is slowly dispersed. All subpulses incident on the target at this stage will be reflected until the particle density drops, as a result of dispersion, to a value corresponding to n_{cr}. At this time high-temperature heating of the plasma is possible. It is thus established that reflection of ultrasonic pulses arises in plasma regions where the electron density is close to critical. Other subjects discussed in the article include plasma radiation and heat conductivity, the effect of laser radiation pressure, and electron-ion relaxation in a plasma formed by a powerful ultrashort laser pulse.

2/2

APPROVED FOR RELEASE: 09/17/2001 CIA-RDP86-00513R002201620004-4"

"APPROVED FOR RELEASE: 09/17/2001 CIA-RDP86-00513R002201620004-4

1/2 024 UNCLASSIFIED PROCESSING DATE--30OCT70

TITLE--MECHANISM AND KINETICS OF ISOHEXENE DIMERIZATION ON AN ALUMINOSILICATE CATALYST -U-

AUTHOR-(03)-OSOKIN, YU.G., KRYUKOV, S.I., FELDBLYUM, V.I.

COUNTRY OF INFO--USSR

SOURCE--ZH. ORG. KHIM. 1970, 6(4), 691-8

DATE PUBLISHED--------70

SUBJECT AREAS--CHEMISTRY

TOPIC TAGS--HEXENE, DIMERIZATION, CHEMICAL KINETICS, ALUMINUM SILICATE, ACTIVATION ENERGY, CHEMICAL REACTION MECHANISM

CONTROL MARKING--NO RESTRICTIONS

DOCUMENT CLASS--UNCLASSIFIED

PROXY REEL/FRAME--2000/1959 STEP NO--UR/0366/70/006/004/0691/0698

CIRC ACCESSION NO--AP0125548

UNCLASSIFIED

APPROVED FOR RELEASE: 09/17/2001 CIA-RDP86-00513R002201620004-4"

"APPROVED FOR RELEASE: 09/17/2001 CIA-RDP86-00513R002201620004-4

2/2 024 UNCLASSIFIED PROCESSING DATE--30OCT70

CIRC ACCESSION NO--AP0125548

ABSTRACT/EXTRACT--(U) GP-0- ABSTRACT. THE DIMERIZATION OF THE THERMODYNAMIC EQUIL. MIXT. OF H SUB2 C:CMEPR (I) WITH ME SUB2 C:CHET (II) IN THE PRESENCE OF ALUMINOSILICATE CATALYSTS IS A 2ND ORDER REACTION WITH 15.9 KCAL-MOLE ACTIVATION ENERGY. THE FOLLOWING ISOMERIC C SUB12 ALKENES ARE FORMED: PRCME SUB2 CH SUB2 C(:CH SUB2)PR, PRCME SUB2 CH SUB2 CME:CHET, PRCME SUB2 CH:CMEPR, PRCME SUB2 CHETCME:CH SUB2, AND PRCME SUB2 CET:CME SUB2. THE DIMERIZATION MECHANISM INVOLVES THE ADDNS. OF ME SUB2 C PRIME POSITIVE PR TO I OR II; I REACTS ABOUT 5 TIMES AS FAST AS II IN THIS ADDN. REACTION. FACILITY: YAROSLAV. TEKHNOL. INST., YAROSLAVL, USSR.

UNCLASSIFIED

APPROVED FOR RELEASE: 09/17/2001 CIA-RDP86-00513R002201620004-4"

"APPROVED FOR RELEASE: 09/17/2001 CIA-RDP86-00513R002201620004-4

USSR

UDC 621.575.126

VAKKE, V.A., ZAYTSEV, A.A., KRYUKOV, S.P., LOPUKHIN, V.N. [Moscow State University]

"Problems Of Designing A Narrow-Band Tunable DC-Pumped Amplifier"

Izv.VUZ:Radiofizika, Vol XV, No 2, Feb 1972, pp 291-299

Abstract: The possibility is discussed of designing a narrow-band tunable amplifier-filter on the basis of a diptron [diftron]. The scheme of this unit contains a ferromagnetic tip, an electron gun, an input distribution coupler, an amplification zone, an output distribution coupler, and a coupler. The dispersion characteristics of waves of the electron flow and delay system are presented. The advisibility is shown of using a single-row comb as an input coupler of the amplifier. The parameters are numerically calculated. A graph is shown of the dispersion characteristics of a zero-order space harmonic and the distribution of high-frequency electrical fields of a single-row plane comb. The scheme is presented of an amplifier-filter with a combined delay system and one of the variants of such a system. The physical processes during interaction between the electron beam with a delay system and the dc-pumped fields are considered. Numerical estimates are given. 5 fig. 9 ref. Received by editors, 26 Apr 1971.

1/1

APPROVED FOR RELEASE: 09/17/2001 CIA-RDP86-00513R002201620004-4"

"APPROVED FOR RELEASE: 09/17/2001 CIA-RDP86-00513R002201620004-4

1/2 018 UNCLASSIFIED

TITLE--PRESSURE TEMPERATURE DIAGRAMS OF AQUEOUS CALCIUM AND LITHIUM SOLUTIONS -U- PROCESSING DATE--04DEC70

AUTHOR-(03)-KLIMENKO, A.P., MOGILNYI, V.I., KRYUKOV, V.A.

COUNTRY OF INFO--USSR

SOURCE--CHIM. IND., GENIE CHIM. 1970, 103(5), 591-3

DATE PUBLISHED-------70

SUBJECT AREAS--CHEMISTRY

TOPIC TAGS--CALCIUM CHLORIDE, LITHIUM COMPOUND, PRESSURE EFFECT

CONTROL MARKING--NO RESTRICTIONS

DOCUMENT CLASS--UNCLASSIFIED

PROXY REEL/FRAME--3005/0945 STEP NO--FR/0000/70/103/005/0591/0593

CIRC ACCESSION NO--AP0133031

UNCLASSIFIED

APPROVED FOR RELEASE: 09/17/2001 CIA-RDP86-00513R002201620004-4"

"APPROVED FOR RELEASE: 09/17/2001 CIA-RDP86-00513R002201620004-4

2/2 018 UNCLASSIFIED

CIRC ACCESSION NO--AP0133031 PROCESSING DATE--04DEC70

ABSTRACT/EXTRACT--(U) GP-0- ABSTRACT. VAPOR PRESSURES WERE DETD. FOR AQ. CACL SUB2 AND AQ. LICL AS A FUNCTION OF TEMP. (219-300DEGREESK FOR AQ. CACL SUB2; AND 210-320DEGREESK FOR AQ. LICL) AND SOLUTE CONCN. (0-60PERCENT). THE CALCD. WATER CONTENTS IN A GAS DRIED AT 250DEGREESK AND 25 KG-CM PRIME2 WITH PRECOOLED AQ. CACL SUB2 AND AQ. LICL WERE 4 AND 2 PPM, RESP. A FLOW DIAGRAM FOR GAS DRYING FRACTIONATING SYSTEM WITH AQ. CHLORIDE SOLNS. IS GIVEN.

FACILITY: GASENINST., KIEV, USSR.

UNCLASSIFIED

APPROVED FOR RELEASE: 09/17/2001 CIA-RDP86-00513R002201620004-4"

"APPROVED FOR RELEASE: 09/17/2001 CIA-RDP86-00513R002201620004-4

USSR

UDC 536.24

KRYUKOV, V. N., and SOLNTSEV, V. P.

"Investigation of the Heat Exchange on a Rough Plate"

V Sb. "Teplo i Massoperenos". [In the Collection "Heat and Mass Transfer"], Technical Information Minsk, 1972, pp 57-61 (from Referativnyy Zhurnal, No 6, Jun 72. 34. Aviation and Rocket Engines. Abstract No 6.34.21)

Translation: Results are presented of the experimental investigation of heat flows on rough plates. The investigation was carried out on plates with a dense two-dimensional geometrically similar roughness of 0.2, 2.0, and 10.0 mm depths. A control experiment on a smooth surface was used for comparison. Besides, the local heat exchange on the surface with projections and the vortex structure between the roughness components were measured on the plate with 10 mm deep roughness. Four illustr., two biblio. refs.

1/1

APPROVED FOR RELEASE: 09/17/2001 CIA-RDP86-00513R002201620004-4"

"APPROVED FOR RELEASE: 09/17/2001 CIA-RDP86-00513R002201620004-4

Welding

USSR

UDC 621.774.2

MATVEYEV, Yu. M., MAKAROV, I. P., KRYUKOV, V. N., ZUBAREVA, V. A., SAMARYANOV, Yu. V., ANTIPOV, B. F., KOZLOV, D. G., and ZIMINA, N. G., Ural Scientific Research Pipe Institute, Vyksunskiy Metallurgical Plant

"Production of Furnace-Welded Pipes With Oxygen Blowing of Skelp Edges"

Moscow, Metallurg, No 1, Jan 71, pp 34-35

Abstract: The quality of furnace-welded pipe is assessed by the welded seam quality, which is a function of the chemical composition of the metal, reduction in the welding pass, heating temperature, and the finish of the edges to be welded. In order to remove the scale and preheat the metal prior to welding, the edges are blown with high-pressure air. Blowing with oxygen makes it possible to raise the temperature of the edges. Oxygen facilitates the melting of refractory oxides and their removal from the surface of the skelp. The use of oxygen for blowing skelp edges on the furnace welding line of the Vyksunskiy Metallurgical Plant resulted in a marked increase in the quality of pipes. The strength of the weld in cone flaring tests was found to increase more than six-fold and the weld structure improved as well. The yearly savings with the use of oxygen on one mill was about 50,000 rubles.

1/1

APPROVED FOR RELEASE: 09/17/2001 CIA-RDP86-00513R002201620004-4"

"APPROVED FOR RELEASE: 09/17/2001 CIA-RDP86-00513R002201620004-4

USSR UDC: 539.3/5:678

UMANSKIY, E. S., KRYUCHKOV, V. V., VEREMCHUK, S. S., Kiev

"Creep and Recovery of Composite Films at High Temperatures"

Kiev, Problemy Prochnosti, No 7, Jul 72, pp 111-115.

Abstract: Results are presented from a study of the creep and recovery of six types of magnetic media based on lavsan under isothermal conditions at temperatures of 20, 40, 60 and 80° C. The instantaneous viscoelastic and residual deformation was studied as a function of temperature, load and time. A linear integral hereditary equation with a kernel in the form of the diffractional-exponent function of Yu. M. Rabotnov is used to describe the creep curves of the class of materials studied. Calculation values of creep deformation are produced at working stress levels which coincide with the experimental results with accuracy sufficient for practice.

1/1

APPROVED FOR RELEASE: 09/17/2001 CIA-RDP86-00513R002201620004-4"

"APPROVED FOR RELEASE: 09/17/2001 CIA-RDP86-00513R002201620004-4

1/2 018 UNCLASSIFIED PROCESSING DATE--09OCT70

TITLE--REACTIONS OF BENZYL ALCOHOL UNDER CONDITIONS FOR THE SYNTHESIS OF ALIPHATIC COMPOUNDS FROM CARBON MONOXIDE AND HYDROGEN --U--

AUTHOR-(04)-KRYUKOV, YU.B., SHUIKIN, A.N., SHUMAYEVA, Z.T., BASHKIROV, A.N.

COUNTRY OF INFO--USSR

K

SOURCE--NEFTEKHIMIYA 1970, 10(1), 83-7

DATE PUBLISHED--------70

SUBJECT AREAS--CHEMISTRY

TOPIC TAGS--BENZYL ALCOHOL, CATALYTIC ORGANIC SYNTHESIS, METAL OXIDE, CARBON MONOXIDE, HYDROGEN, GAS CHROMATOGRAPHY, BENZENE DERIVATIVE, ETHANOL, PROPANOL, HYDROGENATION, HYDROCARBON SYNTHESIS

CONTROL MARKING--NO RESTRICTIONS

DOCUMENT CLASS--UNCLASSIFIED

PROXY REEL/FRAME--1992/1863 STEP NO--UR/0204/70/010/001/0083/0087

CIRC ACCESSION NO--AP0112863

UNCLASSIFIED

APPROVED FOR RELEASE: 09/17/2001 CIA-RDP86-00513R002201620004-4"

"APPROVED FOR RELEASE: 09/17/2001 CIA-RDP86-00513R002201620004-4

2/2 018 UNCLASSIFIED PROCESSING DATE--09OCT70

CIRC ACCESSION NO--AP0112863

ABSTRACT/EXTRACT--(U) GP-0- ABSTRACT. PHCH SUB2 OH-CO-H WAS PASSED OVER A FE SUB2 O SUB3-AL SUB2 O SUB3-V SUB2 O SUB5-K SUB2 O CATALYST AT 450DEGREES-50 ATM DURING 12 HR AND THE PRODUCTS WERE DISTD. AND ANALYZED BY GAS LIQ. CHROMATOG. PHCH SUB2 OH WAS, IN PART, CONVERTED DIRECTLY TO PHME, BZH, AND BIBENZYL. CHAIN FORMATION TO 2,PHENYLETHANOL, 3,PHENYLPROPANOL, AND HIGHER HOMOLOGS AND HYDROGENATION OF THESE TO THE CORRESPONDING HYDROCARBONS ALSO OCCURRED. FACILITY: INST. NEFTEKHIM. SIN. IM. TOPCHIEVA, MOSCOW, USSR.

UNCLASSIFIED

APPROVED FOR RELEASE: 09/17/2001 CIA-RDP86-00513R002201620004-4"

"APPROVED FOR RELEASE: 09/17/2001 CIA-RDP86-00513R002201620004-4

USSR UDC 621.375.443

ZAVADOVSKIY, A.Z., KRYUKOV, YU.G. [Members, Scientific-Technical Society Of Radio Engineering, Electronics, And Communication imeni A.S. Popov]

"Computation Of The Scattering Of Transistor Parameters During Design Of Transistorized IF Amplifiers With Pairs Of Staggered Stages"

Radiotekhnika, Vol 27, No 4, Apr 1972, pp 70-77

Abstract: In a previous work by the authors (Radiotekhnika, Vol 24, 1969, No 5), the effect is analyzed of the scattering of the reactive and active constituent parameters of transistors on the indices of intermediate frequency amplifiers with tuned circuits. The present work considers an IF amplifier with pairs of staggered stages using the common emitter circuit most often employed in practice. Relationships are obtained characteristic of the effect of the scattering of transistor parameters on the principal indices of such an amplifier. Recommendations are made concerned with the use of these relationships during engineering design of IF amplifiers. 2 ill. 5 ref. Received, 17 Dec 1969; after further improvement, 9 Dec 1970.

1/1

APPROVED FOR RELEASE: 09/17/2001 CIA-RDP86-00513R002201620004-4"

"APPROVED FOR RELEASE: 09/17/2001 CIA-RDP86-00513R002201620004-4

Acc. Nr: AP0052436 Abstracting Service: CHEMICAL ABST. 5-70 Ref. Code: UR0342

K

101738p Effect of washing on the quality of cotton fabric finished by Karbamol TsEM [1,3-bis(hydroxymethyl)-2-imidazolidinone]. Kryukova, A. S.; Nesterenko, R. V. (NIOPiK, Moscow, USSR). *Tekst. Prom. (Moscow)* 1970, 30(1), 50-3 (Russ). Samples of cotton poplin were treated with a finishing soln. contg. 300 Karbamol TsEM and 20 g/l. $MgCl_2.6H_2O$ One portion of the samples was washed with 0.2% household soap soln. The washed samples after storage at 20° and 65% relative air humidity for 28 days retained their original crease recovery angle (α) and lost 3.8% of the chem. bound HCHO. The unwashed samples after 28 days storage lost 10% bound HCHO; α was decreased 10%. The evolution of HCHO from the washed samples, stored in a closed space, was 1/6 of that from the unwashed samples. CPJR

JC

REEL/FRAME 19821070

APPROVED FOR RELEASE: 09/17/2001 CIA-RDP86-00513R002201620004-4"

"APPROVED FOR RELEASE: 09/17/2001 CIA-RDP86-00513R002201620004-4

175 - 008 UNCLASSIFIED PROCESSING DATE--23OCT70

TITLE--POLAROGRAPHIC AND POTENTIOMETRIC DETERMINATION OF BENZENEPOLYCARBOXYLIC ACIDS -U-

AUTHOR-(04)-KRYUKOVA, G.G., RUSAKOVA, M.S., PAVELKO, N.V., TURKYAN, YA.I.

COUNTRY OF INFO--USSR

K

SOURCE--ZH. ANAL. KHIM. 1970, 15(2), 369-73

DATE PUBLISHED--------70

SUBJECT AREAS--CHEMISTRY

TOPIC TAGS--AROMATIC CARBOXYLIC ACID, POLAROGRAPHIC ANALYSIS, POTENTIOMETRIC TITRATION, CHEMICAL ANALYSIS

CONTROL MARKING--NO RESTRICTIONS

DOCUMENT CLASS--UNCLASSIFIED

PROXY REEL/FRAME--1993/0694 STEP NO--UR/0075/70/025/002/0369/0373

CIRC ACCESSION NO--AP0113562

UNCLASSIFIED

APPROVED FOR RELEASE: 09/17/2001 CIA-RDP86-00513R002201620004-4"

"APPROVED FOR RELEASE: 09/17/2001 CIA-RDP86-00513R002201620004-4

2/3 008 UNCLASSIFIED PROCESSING DATE--23OCT70

CIRC ACCESSION NO--AP0113562

ABSTRACT/EXTRACT--(U) GP-0- ABSTRACT. POLAROGRAPHIC CHARACTERISTICS OF 3,3 PRIME,4,4 PRIME BENZOPHENONETETRACARBOXYLIC ACID (I), 3,3 PRIME,BENZOPHENONEDICARBOXYLIC ACID (II) AND 4,4 PRIME,OXYDIPHTHALIC AICDS (III) WERE OBTAINED. THE 1ST POLAROGRAPHIC WAVE OF I WAS STUDIED MICROCOULOMETRICALLY. THIS WAVE IN BOTH ACID AND ALK. BUFFERS AND THE WAVE OF II IN ALK. BUFFER ARE OF THE 2 ELECTRON TYPE (REDN. OF THE ACRBONYL GROUP). THE 2ND WAVE OF I AND THE WAVE OF III IN AN ACID SOLN. IS OF THE 4 ELECTRON TYPE. IN AN ALK. SOLN. THIS WAVE SHIFTS TO THE AREA OF THE SUPPORTING ELECTROLYTE DISCHARGE POTENTIAL. POLAROGRAPHIC AND POTENTIOMETRIC METHODS WERE DEVELOPED FOR THE DETN. OF I IN THE PRESENCE OF HNO SUB3, OF I IN THE PRESENCE OF II AND ACOH AND OF III IN THE PRESENCE OF ACOH. TO ANALYZE A 1:5 MIXT. OF I-HNO $UB3 POLAROGRAPHICALLY, NEUTRALIZE A 0.1-G SAMPLE BY USING PHENOLPHTHALEIN AS INDICATOR, ADD 2.5 ML PH 2.0 BUFFER AND 10 ML 2.5M KCL, AND DIL. TO 25 ML WITH H SUB2 O. RECORD THE POLAROGRAM IN THE RANGE MINSU 0.55 TO MINUS 0.75 V. DET. I CONCN. BY THE 1ST WAVE AND THE METHOD OF STD. ADDNS. IN THE POTENTIOMETRIC METHOD DISSOLVE 0.05-0.20 G IN 25 ML MEOH (CONTG. 4PERCENT H SUB2 O), AND TITRATE WITH 0.1M KOME. THE 1ST JUMP REPRESENTS THE NEUTRALIZATION OF HNO SUB3, THE 2ND NEUTRALIZATION OF 2 CO SUB2 H GROUPS OF I. THE ERROR IS PLUS OR MINUS 4.0PERCENT. WHEN DETG. I AND II IN THE PRESENCE OF ACOH BY THE POLAROGRAPHIC METHOD, DISSOLVE 1.0-1.5 G IN 25 ML 0.1M (SOLN. A), NEUTRALIZE 2.0 ML OF SOLN. A TO PHENOLPHTHALEIN, ADD 2.5 ML PH 9.0 BUFFER AND 10 ML 2.5M KCL, AND DIL. TO 25 ML WITH H SUB2 O. RECORD THE POLAROGRAM IN THE MINUS 1.15 TO MINUS 1.40 V RANGE.

UNCLASSIFIED

APPROVED FOR RELEASE: 09/17/2001 CIA-RDP86-00513R002201620004-4"

"APPROVED FOR RELEASE: 09/17/2001 CIA-RDP86-00513R002201620004-4

3/3 008 UNCLASSIFIED PROCESSING DATE--23OCT70

CIRC ACCESSION NO--AP0113562

ABSTRACT/EXTRACT--DET. THE SUM OF I AND II CONCNS. BY THE METHOD OF ADDNS. TO DET. I ALONE, NEUTRALIZE 2.0 ML OF SOLN. A, ADD 2.5 ML UNIVERSAL BUFFER (PH 2.0) AND 10 ML 2.5M KCL, AND DIL. TO 25 ML WITH H SUB2 O. FILTER AND RECORD THE POLAROGRAM IN THE MINUS 0.55 TO MINUS 0.75 V RANGE. IN THE POTENTIOMETRIC METHOD DISSOLVE 0.05-0.10 G IN 25 ML MECOET CONTG. 4PERCENT H SUB2 O AND TITRATE POTENTIOMETRICALLY WITH A 0.2M KOME. THE 1ST JUMP REPRESENTS THE NEUTRALIZATION OF 2 CO SUB2 H GROUPS OF I. TO DET. III IN THE PRESENCE OF ACOH BY POLAROGRAPHY NEUTRALIZE 0.1-0.2 G OF SAMPLE WITH 0.1M NAOH BY USING PHENOLPHTHALEIN AS INDICATOR, ADD 2.5 ML PH 2.0 BUFFER AND 10 ML 2.5M KCL, DIL. TO VOL. WITH H SUB2 O, RECORD THE POLAROGRAM IN THE RANGE MINUS 1.15 TO MINUS 1.30 V, AND DET. III CONCN. BY THE METHOD OF ADDNS. IN THE POTENTIOMETRIC METHOD DISSOLVE 0.05-0.10 G IN 25 ML MECOET CONTG. 4PERCENT H SUB2 O AND TITRATE WITH 0.1M KOME. THE 1ST JUMP REPRESENTS III CONCN. THE ERROR IN THE DETN IS PLUS OR MINUS 2.5PERCENT.

FACILITY: YAROSLAV. TECHNOL. INST. SCI. RES. INST. MONOMERS SYN. RUBBER, YAROSLAVL, USSR.

UNCLASSIFIED

APPROVED FOR RELEASE: 09/17/2001 CIA-RDP86-00513R002201620004-4"

"APPROVED FOR RELEASE: 09/17/2001 CIA-RDP86-00513R002201620004-4

1 USSR

UDC 621.378.325

BOGDANKEVICH, O.V., BORISOV, N.A., KALENDIN, V.V., KOVSH, I.B., KRYUKOVA, I.V.

"Kinetics Of Reproduction Of Luminescent Properties Of GaAs Single Crystals Irradiated By An Intense Beam Of Electrons"

Kvantovaya elektronika (Quantum Electronics), Moscow, No 5(11),1972,pp 108-111

Abstract: In previous papers by the authors,studies of the principal characteristics of a GaS laser with pumping by a beam of electrons with an energy up to 1 Mev (i.e., above the threshold for formation of defects) showed that with a sufficiently prolonged operation of the laser in such a regime, a decrease of power was observed at approximately 30--50 percent. However, annealing of the crystals at room temperature over several hours leads to practically a complete reduction of it. In the present work new results are reported concerning improvement of the radiating power of GaAs after irradiation by intense electrons. Irradiation of the single crystal was conducted at 300° K with the following parameters of the electron beam: energy of electrons, 600 kev; current density in beam, 20--30 a/cm^2; duration of current impulse, 15 nanosec; and recurrence frequency, 1--2 Hz. Before and after irradiation the spectra were studied of the photoluminescence of specimens in the 0.75--1.2 micron region at 78° as well as the change of the laser threshold of generation with excitation by electrons.

1/2

APPROVED FOR RELEASE: 09/17/2001 CIA-RDP86-00513R002201620004-4"

"APPROVED FOR RELEASE: 09/17/2001 CIA-RDP86-00513R002201620004-4

USSR

BOGDANKEVICH, O.V., et al., Kvantovaya elektronika, Moscow, No 5(11), 1972, pp 108-111

and a 50 kev energy at 300° K. The specimens had the form of a rectangular parallelepiped: length of resonator 0.5--1 mm, thickness 0.2 mm, width 2--3 mm. The gallium arsenide was grown by the Czochralski method and doped with tellurium to a concentration of $5 \cdot 10^{17}$ cm^{-3} as well as by the liquid epitaxy method (without doping) with a concentration of carriers of $1.2 \cdot 10^{15}$ cm^{-3} and a mobility of 46,000 cm^2/sec at 78° K. (The total concentration of impurity in these specimens amounted to 10^{16} cm^{-3}.) An increase of photoluminescent intensity and a decrease of the laser threshold was observed in the n-GaAs. These changes depend on the intensity and dose of irradiation and the parameters of the initial material. In the non-doped epitaxial specimens an improvement of the luminescent properties was not observed. A qualitative explanation is given of the observed effects. The authors thank O.N. Grigor'yev for measurement of the spectrum of x-ray reflection. 3 fig. 8 ref. Received by editors, 22 Feb 1972.

2/2

APPROVED FOR RELEASE: 09/17/2001 CIA-RDP86-00513R002201620004-4"

"APPROVED FOR RELEASE: 09/17/2001 CIA-RDP86-00513R002201620004-4

USSR

UDC: 539.14.144

KRYUKOVA, L. N., RYASNYY, G. K., and SOROKIN, A. A., Scientific-Research Institute of Nuclear Physics, Moscow State University imeni M. V. Lomonosov

"Studying the Disturbed Angular Correlation of ^{181}Ta in the Hf-Ni Alloy"

Moscow, Izvestiya Akademii Nauk SSSR, Seriya Fizicheskaya, Vol 37, No 9, 1973, pp 1818-1821

Abstract: The authors measure disturbed angular gamma-gamma-correlations using a ^{181}Hf source in the form of a 0.3 at. % wt. Ni alloy made by the arc melting method. A value of H_{eff}=91 ±2 conversion electrons is obtained from the differential measurements for the 133-482 kev cascade on Ta nuclei. This is in agreement with known data. The parameters of the experimental curve show that approximately 45 percent of the Hf atoms of the given source are at matrix lattice points. This is close to that value which was achieved by sources which were produced by the implantation method. It is obvious that significantly smaller (or null) fields are acting on the nuclei of atoms not located at lattice points. In further studies, the $HfFe_2$ or $(Hf_xZr_{1-x})Fe_2$ type intermetallides should be used.

1/1

APPROVED FOR RELEASE: 09/17/2001 CIA-RDP86-00513R002201620004-4"

"APPROVED FOR RELEASE: 09/17/2001 CIA-RDP86-00513R002201620004-4

1/2 024 UNCLASSIFIED PROCESSING DATE--13SEP70

TITLE--BILE BYPASSING OPERATIONS IN MECHANICAL JAUNDICE ASSOCIATED WITH ALVEOCIATED WITH ALVEOCOCCOSIS OF THE LIVER -U-

AUTHOR-(03)-DEDERER, YU.M., KRYLOVA, N.P., MELENTYEVA, L.N.

COUNTRY OF INFO--USSR

K

SOURCE--KHIRURGIYA, 1970, NR 2, PP 16-20

DATE PUBLISHED-------70

SUBJECT AREAS--BIOLOGICAL AND MEDICAL SCIENCES

TOPIC TAGS--BILE, SURGERY, JAUNDICE, LIVER, TUMOR, PARASITIC DISEASE

CONTROL MARKING--NO RESTRICTIONS

DOCUMENT CLASS--UNCLASSIFIED

PROXY REEL/FRAME--1983/1317 STEP NO--UR/0531/70/000/002/0016/0020

CIRC ACCESSION NO--AP0054201

UNCLASSIFIED

APPROVED FOR RELEASE: 09/17/2001 CIA-RDP86-00513R002201620004-4"

"APPROVED FOR RELEASE: 09/17/2001 CIA-RDP86-00513R002201620004-4

2/2 024 UNCLASSIFIED PROCESSING DATE--18SEP70

CIRC ACCESSION NO--AP0054201

ABSTRACT/EXTRACT--(U) GP-0- ABSTRACT. THE ISSUE SETS FORTH THE RESULTS OF BILE BY PASSING OPERATIONS PERFORMED IN 93 PATIENTS FOR MECHANICAL JAUNDICE ASSOCIATED WITH ALVEOCOCCOSIS OF THE LIVER. FIVE PRINCIPAL TYPES OF OPERATIVE INTERVENTIONS WERE CARRIED OUT, CHOLANGIOHEPATOJEJUNOSTOMY WITH A CLOSE DRAINAGE (IN LOCALIZATION OF THE PARASITIC TUMOR IN THE RIGHT LOBE AND HEPATIC PORTALS, 41 OPERATIONS), CHOLANGIOCHOLECYSTOJEJUNOSTOMY OR CHOLANGIOCHOLECYSTOGASTROSCOPY (IN PARASITIC TUMOR IN THE LEFT LOBE, FIVE OPERATIONS CAVERNOJEJUNOSTOMY AND IN THE PRESENCE OF THE LESION IN THE DISINTEGRATION CAVITY COMMUNICATING WITH A LARGE BILIARY PASSAGE IN PROFILIRATION, IN ALVEOCOCCOCUS PROLIFERATION NOT ONLY INTO THE RIGHT AND LEFT HEPATIC DUCTS BUT EVEN MINOR BRANCHING, DISSECTION OF THE CONTRAL PART OF THE PARASITIC NODE WITH DRAINAGE AND SUBSEQUENT FISTULOJAJUNOSTOMY. IN COMPRESSION OF MAJOR DUCTS BOUGINAGE AND INTERNAL DRAINAGE WAS DONE DURING THE OPERATION. THE OPERATION ELIMINATED COMPLETELY IN 35 PATIENTS, REDUCED IN 24. 10 PATIENTS WERE DISCHARGED WITHOUT CHANGES AND 23 DIED. THE AVERAGE LIFE SPAN COMPRISED 2-3 YEARS. THE AUTHORS ARRIVED AT THE CONCLUSION THAT SUCH OPERATIONS IN A COMPLEX OF ANTIPARASITIC AGENTS IMPROVE THE STATE OF PATIENTS.

UNCLASSIFIED

APPROVED FOR RELEASE: 09/17/2001 CIA-RDP86-00513R002201620004-4"

"APPROVED FOR RELEASE: 09/17/2001 CIA-RDP86-00513R002201620004-4

1/2 009 UNCLASSIFIED PROCESSING DATE--27NOV70

TITLE--BETA PHENYLHYDRAZONE OF ALPHA BETA DIOXOBUTYRIC ACID AND ITS TRANSFORMATIONS -U-

AUTHOR-(02)-IOFFE, I.S., KRYUKOVA, L.M.

K

COUNTRY OF INFO--USSR

SOURCE--ZH. OBSHCH. KHIM. 1970, 40(2), 403-6

DATE PUBLISHED-------70

SUBJECT AREAS--CHEMISTRY

TOPIC TAGS--HYDRAZONE, KETONE, BUTYRIC ACID, PYRAZOLE, POLYNUCLEAR HYDROCARBON

CONTROL MARKING--NO RESTRICTIONS

DOCUMENT CLASS--UNCLASSIFIED

PROXY REEL/FRAME--3006/1486 STEP NO--UR/0079/70/040/002/0403/0406

CIRC ACCESSION NO--AP0135149

UNCLASSIFIED

APPROVED FOR RELEASE: 09/17/2001 CIA-RDP86-00513R002201620004-4"

"APPROVED FOR RELEASE: 09/17/2001 CIA-RDP86-00513R002201620004-4

2/2 009 UNCLASSIFIED PROCESSING DATE--27NOV70

CIRC ACCESSION NO--AP0135149

ABSTRACT/EXTRACT--(U) GP-0- ABSTRACT.

1,PHENYL,3,METHYL,4,5,DIOXOPYRAZOLINE (IA) DISSOLVED IN 10PERCENT NAOH, FILTERED AND ACIDIFIED WITH HCL, GAVE A GRADUALLY SOLIDIFYING OIL, WHICH GAVE 41PERCENT PHNHN:CMECOCO SUB2 H (I), M. 123DEGREES. WHEN THIS WAS CRYSTD. FROM AQ. ME SUB2 CO IT GAVE YELLOW PHNHN:CMEC (CO SUB2 H):NNHPH(II), M. 196-7DEGREES, WHILE ITS MOTHER LIQUOR ON STANDING 3 DAYS GAVE 1,PHENYL,3,METHYLDIOXOPYRAZOLINE,4,5,DIONE,4,PHENYLHYDRAZONE, M. 153-4DEGREES. I IN AQ. ETOH TREATED AT 40DEGREES WITH PHNHNH SUB2 AND 50PERCENT ACOH GAVE 93PERCENT II. HOLDING 1,PHENYL,3,METHYL,4,5,DIOXOPYRAZOLINE 4,THIOSEMICARBAZONE (III) IN 0.5N NAOH 2 HR AT 65DEGREES GAVE, ON ACIFIFICATION, 76.5PERCENT PHNHN:CMEC(CO SUB2 H):NNHCSNH SUB2 (IV), M. 219DEGREES. I AND THIOSEMICARBAZIDE IN AQ. ETOH GAVE A SOLID, M. 170-7DEGREES, CONTG. BOTH III AND IV. II IN ALC. HCL 1 DAY GAVE 21PERCENT 1,PHENYL,3,METHYL,4,5,PYRAZOLINEDIONE 4,PHENYLHYDRAZONE, ALSO FORMED FROM II AND AQ. ALC. HCL 1 DAY. IA IN AQ. ETOH ACOH GAVE, WITH THIOSEMICARBAZIDE, 81PERCENT 1,PHENYL,3,METHYL,4,5,DIOXOPYRAZOLINE 4,THIOSEMICARBAZONE, DECOMPD. 224-5DEGREES, ALSO FORMED FROM IV BY HEATING WITH AQ. ALC. ACOH. I HEATED 1 HR IN ACOH GAVE V, M. 184-5DEGREES, ALSO FORMED FROM I HEATED TO ABOVE ITS M.P. OR FROM IA HEATED WITH ACOH NH SUB4 OH 1 HR.

UNCLASSIFIED

APPROVED FOR RELEASE: 09/17/2001 CIA-RDP86-00513R002201620004-4"

"APPROVED FOR RELEASE: 09/17/2001 CIA-RDP86-00513R002201620004-4

K

USSR

BAKIYEV, S. A., KORDYUKEVICH, V. O., KRYUKOVA, L. N., MURAV'YEVA, V. V., and SOROKIN, A. A., Scientific Research Institute of Nuclear Physics of Moscow State University imeni M. V. Lomonosov

"Investigation of Radioactive Decay of Neutron Deficient Isotopes of Pt, Ir, and Os"

Moscow, Izvestiya Akademii Nauk SSSR, Seriya Fizicheskaya, Vol. 34, No. 1, Jan 70, pp 59-61

Abstract: The γ-radiation of neutron deficient isotopes Pt^{189}, Pt^{188}, Ir^{189}, and Os^{185} formed by bombarding gold with protons on the synchrocyclotron of the Joint Institute of Nuclear Research was investigated on a Ge(Li)-spectrometer. A chemical method was used to separate the disintegration products of the gold. The energies and relative intensities of the γ-rays are presented in tables for each of the isotopes. The experimental values obtained are compared with data of other authors. In the case of Pt^{189}, it was difficult to separate the lines of Pt^{189} in Pt^{191}, so only upper limits of the intensity were given for γ-rays of 81 and 94 kev. The discrepancy in the intensities of the lines 94, 140, and 300 kev with data of Fourier, et al were beyond the limits of the experimental error; it was impossible

1/2

APPROVED FOR RELEASE: 09/17/2001 CIA-RDP86-00513R002201620004-4"

"APPROVED FOR RELEASE: 09/17/2001 CIA-RDP86-00513R002201620004-4

USSR

BAKIYEV, S. A., et al, Izvestiya Akademii Nauk SSSR, Seriya Fizicheskaya, Vol. 34, No. 1, Jan 70, pp 59-61

to explain this divergence by the possible contribution of lines caused by the presence of other isotopes in the platinum fraction. Explanations of certain other discrepancies in the measurements are offered.

2/2

APPROVED FOR RELEASE: 09/17/2001 CIA-RDP86-00513R002201620004-4"

"APPROVED FOR RELEASE: 09/17/2001 CIA-RDP86-00513R002201620004-4

DYKHNENKO, L. M., KRYUKOVA, N. A., and MATVEYEVA, L. T.

"Device for Transmitting Digital Information from an Electronic Computer to a Controlled Object"

Moscow, Pribory i Tekhnika Eksperimenta, No. 3, 1971, pp 84-86

Abstract: This article describes an instrument capable of receiving a 20-digit parallel potential binary code from an electronic computer, transforming the code into a sequential paraphase pulse code, transmitting this code over a two-conductor coaxial line to a device for transforming the sequential code into a parallel one, and finally transmitting the code to an object controlled by the computer. The instrument has unit time synchronization for realizing the control algorithm, during which it can put out 105 control words containing the three-bit address of the object, the four-bit address of the activating device in the selected object, and a 13-bit information word for the activating device. A block diagram of the whole system is given, plus diagrams of the section for converting the parallel potential code into the pulse paraphase sequential code, and the seven-unit section for information reception and distribution. The components of most of these sections consist of the "Logik" silicon integrated circuits, types 1LB 211A-D. Silicon transistors types 2T312A-C are also used.

1/1

APPROVED FOR RELEASE: 09/17/2001 CIA-RDP86-00513R002201620004-4"

"APPROVED FOR RELEASE: 09/17/2001 CIA-RDP86-00513R002201620004-4

RAN/ /R-760/ 5 ... 72

Dec '72

(4

Kryukova, S. G., and V. S. Nikolayev. Experimental investigation of optimally balanced profiles in viscous supersonic flow. IN: Uchenyye zapiski Tsentral'nogo aero-gidrodinamicheskogo instituta, v. 2, no. 5, 1971, 94-98. (RZhMekh, 5/72, no. 5B377)

The optimal shapes of three classes of profiles with a given location of the balancing center of pressure were investigated in viscous hypersonic flow stream (M_∞ = 5.2, R = 150). The upper boundary of the quality factor as a function of the location of the center of pressure is found for the profiles under consideration. The experimental results are compared with theoretical data calculated by one of the authors (Nikolayev, Uchenyye zapiski Tsentral'nogo aero-gidrodinamicheskogo instituta, v. 1, no. 6, 1970, 67-74, RZhMekh, 1971, no. 10B229).

Rakhmatulin, Kh. A., and S. I. Mevlyudov. Supersonic flow around a slender body in a two-phase mixture. IN: Voprosy vychislitel'noy i prikladnoy matematiki, Tashkent, no. 9, 1971, 166-175. (RZhMekh, 5/72, no. 5B1204)

The problem of supersonic flow around a slender profile or body of revolution by a two-phase mixture is considered in an approximation of linear theory. A model of the interpenetrating motion of two or three interacting continuous media (components) is used. Instead of an equation of energy of the gas or mixture, an assumption of barotropicity is used; i.e., the pressure perturbation p is considered to be a known function

KRYUKOVA, S.G.

APPROVED FOR RELEASE: 09/17/2001 CIA-RDP86-00513R002201620004-4"

"APPROVED FOR RELEASE: 09/17/2001 CIA-RDP86-00513R002201620004-4

USSR UDC 616.981.553-071

KRYUKOVA, Z. V., SUK, I. S., and BONDAREV, L. S., Chair of Infectious Diseases, Donetsk Medical Institute

"Clinical Symptoms of Botulism"

Kiev, Vrachebnoye Delo, No 7, Jul 70, pp 130-133

Abstract: A discussion is presented of 37 cases of botulism observed between 1954 and 1968 caused by consumption of home-canned foods, primarily pork products. In most patients the initial dyspepsia was quickly followed by general weakness, headache, nausea, dryness in the mouth, and constipation. These symptoms were generally associated with neurologic disturbances (mydriasis, diplopia, anisocoria, decreased visual acuity, nystagmus, absence of or decrease in pharyngeal reflex, difficulty in swallowing, speech disorders), cardiovascular disturbances (muffling of heart sounds and, less commonly, bradycardia, arterial hypotension, myocarditis), and elevated temperature (varying with the severity of the course of the disease). Through comprehensive therapy, with emphasis on the use of antibotulism serum, 34 of the 37 patients recovered.

1/1

APPROVED FOR RELEASE: 09/17/2001 CIA-RDP86-00513R002201620004-4"

"APPROVED FOR RELEASE: 09/17/2001 CIA-RDP86-00513R002201620004-4

USSR UDC 621.791.75:621.3.014.3:62-229.213.001.5:
669.715

LITVINTSEV, A. I., Candidate of Technical Sciences, KRYUKOVSKIY, V. N., Candidate of Technical Sciences, and TENENBAUM, F. Z., Engineer

"Specifics of the Structure of the Arc Produced in the Pulsed Arc Welding of AMg6 Alloy"

Moscow, Svarochnoye Proizvodstvo, No 11, Nov 70, pp 8-10

Abstract: The processes which occur in the visible arc during pulsed welding with a melting electrode are analyzed. The arc consists of three zones with characteristic physical and chemical processes. The smooth film around the endge of the welding bath and seam consist of a mechanical mixture of atoms of Al, Mg, and MgO, condensed from the vapor phase on the surface of the welded metal. The dull black film formed near the welded seam consists of $MgAl_2O_4$ and MgO powdered oxides and pure Al and Mg. The oxygen and mositure contained in the Ar protective gas oxidize the Mg vapors. The process of oxidation of metal vapors occurs most strongly in the outer envelope of the arc. 1/2

APPROVED FOR RELEASE: 09/17/2001 CIA-RDP86-00513R002201620004-4"

"APPROVED FOR RELEASE: 09/17/2001 CIA-RDP86-00513R002201620004-4

USSR

LITVINTSEV, A. I., et al., Svarochnoye Proizvodstvo, No 11, Nov 70, pp 8-10

The primary source of oxygen is mositure absorbed by the surface of the electrode wire. As the absorption capacity of the surface of the electrode wire is decreased by chemical or mechanical processing, the intensity of oxidation of metal vapors in the arc can be significantly decreased.

2/2

APPROVED FOR RELEASE: 09/17/2001 CIA-RDP86-00513R002201620004-4"

"APPROVED FOR RELEASE: 09/17/2001 CIA-RDP86-00513R002201620004-4

USSR UDC 621.791.053.004.64:669.715

KRYUKOVSKIY, V. N., Candidate of Technical Sciences, NOVIKOV, O. M., Engineer, MESHKOVA, O. V., Candidate of Technical Sciences, and SUSHKOV, V. N., Engineer

"Discontinuities in Welds of Alloy AMg6 in the Presence of Oxide Inclusions"

Moscow, Svarochnoye Proizvodstvo, No 12, Dec 70, pp 25-27

Abstract: The article describes results of a study of the reasons for the formation of discontinuities in welds of alloy AMg6. Weld discontinuities due to the presence of oxide skins can be divided into two types, viz. long ones forming along the axis of the weld (poor fusion) and short ones situated at an angle to the axis of the weld. The first type results from poor preparation of the groove face surface, shifting of the arc relative to the butt, as well as increased butt gap. The second type results from oxidation of the filler wire and groove face surface during welding. For purposes of establishing the quantitative dependence of total discontinuity length on the butt gap size, 500 x

1/2

APPROVED FOR RELEASE: 09/17/2001 CIA-RDP86-00513R002201620004-4"

"APPROVED FOR RELEASE: 09/17/2001 CIA-RDP86-00513R002201620004-4

USSR

KRYUKOVSKIY, V. N., et al., Svarochnoye Proizvodstvo, No 12, Dec 70, pp 25-27

250 x 4 mm plates were welded with a gap of 0.25-3.0 mm. Single-phase and three-phase nonconsumable-electrode argon welding was used. The results indicate that there is a range of butt gap values (1.0-1.5 mm) in which there is a minimum cathode sputtering area and a maximum discontinuity length. This range is wider in single-phase than in three-phase welding. An accelerated single-phase welding regime (increasing the weld rate from 10-15 to 20-25 m/hr with a corresponding increase in the welding current) contributes to more complete breakdown and dispersion of the oxide skins, resulting in over a threefold decrease in the total discontinuity length. The assembly and fixation of weldable elements with a minimum butt gap and the use of accelerated procedure and a three-phase instead of a single-phase arc are recommended to prevent the formation of discontinuities due to oxide inclusions in welds.

2/2

APPROVED FOR RELEASE: 09/17/2001 CIA-RDP86-00513R002201620004-4"

"APPROVED FOR RELEASE: 09/17/2001 CIA-RDP86-00513R002201620004-4

AA0040443

UR 0482

3-70

Soviet Inventions Illustrated, Section K Chemical, Derwent,

236676 ARGON-ARC WELDING TORCH has a water-cooled arrangement in the form of two coaxial cylindrical channels inside a housing, which are joined at the lower part by radial openings. To reduce the protrusion of the electrode to 10-15mm the ratio of length of cylindrical part of nozzle to its bore is made 0.5-0.6 and this improves the life of the tungsten electrode. 30.11.67. as 1200836/25-27. A.K.BARANOV et alia. (19.6.69.) Bul.7/3.2.69 Class 21h. Int.Cl. B23k.

AUTHORS: Baranov, A. K.; Kryukovskiy, V. N.; Kucherenko, G. P.; Konradi, G. G.; Raymond, E. D.; Agroskin, Ya. Z.

18

19741933

APPROVED FOR RELEASE: 09/17/2001 CIA-RDP86-00513R002201620004-4"

"APPROVED FOR RELEASE: 09/17/2001 CIA-RDP86-00513R002201620004-4

AA0040443

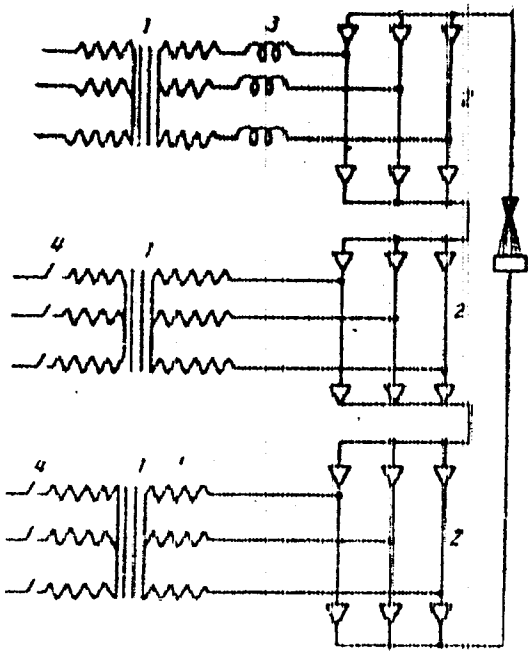

2/2

APPROVED FOR RELEASE: 09/17/2001 CIA-RDP86-00513R002201620004-4"

"APPROVED FOR RELEASE: 09/17/2001 CIA-RDP86-00513R002201620004-4

USSR UDC 621.910.71

KRYUKOVSKIY, V. V., PAPIVIN, V. N., and CHERNYSHEVA, S. P.

"On Chip Formation When Cutting Secondary Titanium Alloys"

Moscow, Metallurgiya i Khimiya Titana (Institut Titana), Metallurgiya Publishing House, Vol 6, 1970, pp 122-126

Translation: Results are given of an investigation of the effect of cutting conditions and the surrounding environment on contraction of chips in cutting secondary titanium alloy. The power dependencies are determined and the microstructures and microhardness of the chip are studied. It is shown that with an increase in the power of feeding and cutting, contraction of the alloy chip decreases, and the coefficient of contraction may take on a value less than one. The speed of cutting influences the formation of "negative" chip contraction more than feeding does. The surrounding environment in which the cutting takes place does not influence chip contraction. The force of cutting rises noticeably with an increase in the depth of feeding. Increasing the cutting speed leads to a certain reduction in it. Increasing the microhardness of the chip layer next to the cutting takes place primarily through work hardening. One illustration, three tables, and one bibliographic entry.

1/1

APPROVED FOR RELEASE: 09/17/2001 CIA-RDP86-00513R002201620004-4"

"APPROVED FOR RELEASE: 09/17/2001 CIA-RDP86-00513R002201620004-4

USSR

UDC: 621.317.726

KRYVIN, N. M., NEUSTROYEV, L. S.

"The IIN-3M Pulse Voltage Meter"

Dokl. Nauchno-tekhn. seminara "Metrol. i radioelektron." Tezisy, Ch. 1 (Reports of the Scientific and Technical Seminar on Metrology in Radio Electronics. Summaries, Part 1), Moscow, 1970, pp 33-35 (from RZh-Radiotekhnika, No 7, Jul 70, Abstract No 7A184)

Translation: The IIN-3M meter designed for measuring instantaneous periodic pulse voltages in the microsecond range is based on a compensation principle. The instantaneous pulse voltage is compensated by a DC voltage which is read out. As a compensation indicator, the unit uses a special CRT with high amplitude resolution. This CRT is a null indicator. The design of this indicator is briefly described. The instrument has a range of 0-100 V for a pulse duration from 1 μsec to 1 msec with an error of 0.2% (+5 mV). The power taken from the line by the instrument is no more than 700 W. The weight is 85 kg. E. L.

1/1

APPROVED FOR RELEASE: 09/17/2001 CIA-RDP86-00513R002201620004-4"

"APPROVED FOR RELEASE: 09/17/2001 CIA-RDP86-00513R002201620004-4

1/2 009 UNCLASSIFIED PROCESSING DATE--04DEC70

TITLE--BLAST FURNACE GRANULATED SLAGS RAISE THE QUALITY OF SLAG PORTLAND CEMENT -U-

AUTHOR-(05)-KRYZHANOVSKAYA, I.A., DOROSHENKO, N.M., POPUDRENKO, M.K., TOKAR, V.A., SHEVCHENKO, I.I.

COUNTRY OF INFO--USSR

SOURCE--TSEMENT 1970, (3), 20-1

DATE PUBLISHED--------70

SUBJECT AREAS--MATERIALS

TOPIC TAGS--BLAST FURNACE SLAG, CEMENT

CONTROL MARKING--NO RESTRICTIONS

DOCUMENT CLASS--UNCLASSIFIED

PROXY FICHE NO----FD70/605018/C08 STEP NO--UR/0101/70/000/003/0020/0021

CIRC ACCESSION NO--AP0140817

UNCLASSIFIED

APPROVED FOR RELEASE: 09/17/2001 CIA-RDP86-00513R002201620004-4"

"APPROVED FOR RELEASE: 09/17/2001 CIA-RDP86-00513R002201620004-4

2/2 009 UNCLASSIFIED PROCESSING DATE--04DEC[illegible]

CIRC ACCESSION NO--AP0140817

ABSTRACT/EXTRACT--(U) GP-0- ABSTRACT. LAB. AND PRODUCTION TESTS SHOW THAT PORTLAND CEMENT BASED ON SLAGS OF BLAST FURNACE GRANULATION RAISE CONSIDERABLY THE CEMENT QUALITY AND INCREASE OUTPUT. FACILITY: KRIVOROZH. TSEM. ZAVOD., KRIVOI ROG, USSR.

UNCLASSIFIED

APPROVED FOR RELEASE: 09/17/2001 CIA-RDP86-00513R002201620004-4"

"APPROVED FOR RELEASE: 09/17/2001 CIA-RDP86-00513R002201620004-4

1/2 020 UNCLASSIFIED PROCESSING DATE--30OCT70

TITLE--GLUCOCORTICOID FUNCTION OF THE ADRENAL CORTEX IN ULCER DISEASE -U-

AUTHOR-(02)-KRYZHANOVSKAYA, I.I., PETIY, S.I.

COUNTRY OF INFO--USSR

SOURCE--VRACHEBNOYE DELO, 1970, NR 4, PP 112-115

DATE PUBLISHED--------70

SUBJECT AREAS--BIOLOGICAL AND MEDICAL SCIENCES

TOPIC TAGS--ADRENAL CORTEX, DUODENUM, CORTICOSTEROID, DIGESTIVE SYSTEM DISEASE, STOMACH

CONTROL MARKING--NO RESTRICTIONS

DOCUMENT CLASS--UNCLASSIFIED

PROXY REEL/FRAME--3002/1706 STEP NO--UR/0475/70/000/004/0112/0115

CIRC ACCESSION NO--AP0129076

UNCLASSIFIED

APPROVED FOR RELEASE: 09/17/2001 CIA-RDP86-00513R002201620004-4"

"APPROVED FOR RELEASE: 09/17/2001 CIA-RDP86-00513R002201620004-4

2/2 020 UNCLASSIFIED PROCESSING DATE--30OCT70

CIRC ACCESSION NO--AP0129076

ABSTRACT/EXTRACT--(U) GP-0- ABSTRACT. PATIENTS WITH GASTRIC AND DUODENAL ULCER SHOWED AN INCREASED GLUCOCORTICOID FUNCTION OF THE ADRENAL CORTEX MAINLY AT THE EXPENSE OF FREE 17, OXYCORTICOSTEROIDS. TREATMENT OF ULCER RESULTED IN SOME NORMALIZATION OF THE GLUCOCORTICOID FUNCTION OF THE ADRENAL CORTEX, BUT IN DUODENAL ULCER DURING EXACERBATION THE PERCENT OF FREE 17, OXYCORTICOSTEROIDS REMAINS HIGH INSPITE OF CLINICAL REMISSION. DETERMINATION OF FREE 17, OXYCORTICOSTEROIDS IS OF CERTAIN VALUE IN ANALYZING THE DURATION OF ULCER EXACERBATION AND EFFICIENCY OF TREATMENT. FACILITY: DNEPROPETROVSKOGO MEDITSINSKOGO INSTITUTA.

UNCLASSIFIED

APPROVED FOR RELEASE: 09/17/2001 CIA-RDP86-00513R002201620004-4"

"APPROVED FOR RELEASE: 09/17/2001 CIA-RDP86-00513R002201620004-4

Public Health, Hygiene and Sanitation

USSR

KRYZHANOVSKAYA, V. V.

"Hygiene of Mental Work for Persons of Advanced Age"

Moscow, Zdorov'ye, No 2, Feb 72, pp 22-23

Abstract: On the basis of studies conducted at the Institute of Gerontology, Academy of Medical Sciences USSR, the following advice can be given to persons of advanced age engaged in mental work. Proper organization of mental work is necessary in order to achieve the required efficiency. This applies particularly to persons of advanced age, because they must adjust the physical and mental load involved to the physiological capacity of the organism. Regular working hours must be kept, because the central nervous system adapts itself to a certain rhythm that is imposed. After a while this rhythm becomes optimal for the organism. The efficiency increases during the first 2-3 hours of a working day and then drops - hence, the most difficult tasks must be performed during the first half of the working day. One should not work until exhaustion, but include regular rest periods involving muscular relaxation and breathing exercises. If the work is of a sedentary type, movement is the best form of rest. One should not sit in a strained position at a desk, e.g., not lean with one's chest on the edge of the desk. Adequate lighting is essential because of the visual strain that is as a rule involved in mental work and because of the fact

APPROVED FOR RELEASE: 09/17/2001 CIA-RDP86-00513R002201620004-4"

"APPROVED FOR RELEASE: 09/17/2001 CIA-RDP86-00513R002201620004-4

USSR

KRYZHANOVSKAYA, V. V., Zdorov'ye, No 2, Feb 72, pp 22-23

that aged persons are incapable of standing an excessive visual strain. A visual strain that exceeds the permissible limit damages not only the eyes, but the whole organism. Light of the right strength that is properly applied acts as a stimulant of the nervous system. A temperature of 18-20°C and a relative humidity of 50-60% should be maintained in the room in which the work is carried out. Extraneous noise should be reduced to a minimum. An environment that is attractive from the esthetic standpoint and harmonious social relations contribute to increasing the efficiency of the work that is being done. Persons of advanced age are adjusted to a definite sequence of periods of work and rest. They develop a dynamic stereotype in this respect which, according to studies carried out at the Institute of Gerontology, can be altered only with great difficulty. If an older mental worker wants to change the routine to which he is accustomed by engaging in a new activity such as skiing or working in a garden, he should consult a physician and acquire the new habits gradually. If harmful effects develop, the advice of a physician should be sought again.

2/2

APPROVED FOR RELEASE: 09/17/2001 CIA-RDP86-00513R002201620004-4"

"APPROVED FOR RELEASE: 09/17/2001 CIA-RDP86-00513R002201620004-4

USSR

UDC 612.84-053-058.9:061.12

KRYZHANOVSKAYA, V. V., and NAVAKATIKYAN, A. O., Institute of Gerontology, Academy of Medical Sciences USSR, and Institute of Labor Hygiene and Occupational Diseases

"Age-Related Changes in the Information Parameters of the Visual Analysor of Persons Doing Intellectual Work"

Moscow, Gigiyena Truda i Professional'nyye Zabolevaniya, No 7, 1971, pp 28-32

Abstract: Sixty-five well-educated persons 20 to 74 years of age were tested on coding tables with Landolt rings to study their visual and visuomotor pathways as indicators of work capacity. The subjects were required to code 5 types of tables differing from one another in the size of the alphabet and number of directions of the breaks in the Landolt rings (2, 4, 05 8). Each cycle was repeated in 3 days. The amount of information processed per symbol changed little with age. With different alphabet lengths, the results approached the maximum characteristic of the particular alphabet. The rate of information processing in the visuomotor pathway increased during the repetitions with equal alphabet lengths and different methods of coding. It gradually decreased in the 60- to 64-year group but slightly increased

1/2

APPROVED FOR RELEASE: 09/17/2001 CIA-RDP86-00513R002201620004-4"

"APPROVED FOR RELEASE: 09/17/2001 CIA-RDP86-00513R002201620004-4

USSR

KRYZHANOVSKAYA, V. V., and NAVAKATIKYAN, A. O., Gigiyena Truda i Professional'nyye Zabolevaniya, No 7, 1971, pp 28-32

in the next older groups. The rate of information processing was higher in the visual pathway, but with increasing age decreased more than in the visuomotor pathway. With increasing alphabet length of the symbols to be coded, the throughput of the visual pathway decreased, especially when the coding involved complicated problems. Hence, persons over 50 to 55 should not be used in jobs where maximum rates of information processing are required because the throughput of their visual pathway is less than half that of younger people.

2/2

APPROVED FOR RELEASE: 09/17/2001 CIA-RDP86-00513R002201620004-4"

"APPROVED FOR RELEASE: 09/17/2001 CIA-RDP86-00513R002201620004-4

1/2 009 UNCLASSIFIED PROCESSING DATE--20NOV70

TITLE--AERATED CONCRETES -U-

AUTHOR-(05)-SHVARTZAYD, M.S., CAPARDIN, V.N., KRYZHANOVSKIY, B.B., LEONTYEV, YE.N., ZEMTSOV, D.G.

COUNTRY OF INFO--USSR

K

SOURCE--U.S.S.R. 267,427

REFERENCE--OTKRYTIYA, IZOBRET., PROM. OBRAZTSY, TOVARNYE ZNAKI 1970,

DATE PUBLISHED--------70

SUBJECT AREAS--MATERIALS

TOPIC TAGS--PATENT, CONCRETE

CONTROL MARKING--NO RESTRICTIONS

DOCUMENT CLASS--UNCLASSIFIED

PROXY REEL/FRAME--3002/1402 STEP NO--UR/0482/70/000/000/0000/0000

CIRC ACCESSION NO--AA0128801

UNCLASSIFIED

APPROVED FOR RELEASE: 09/17/2001 CIA-RDP86-00513R002201620004-4"

"APPROVED FOR RELEASE: 09/17/2001 CIA-RDP86-00513R002201620004-4

2/2 009 UNCLASSIFIED PROCESSING DATE--20NOV70

CIRC ACCESSION NO--AA0126801

ABSTRACT/EXTRACT--(U) GP-0- ABSTRACT. CELLULAR CONCRETES BASED ON GROUND QUICKLIME AND SILICEOUS COMPONENTS WERE PREPD. BY 2 STAGE MIXING OF THESE COMPONENTS. IN THE 1ST STAGE ALL DRY COMPONENTS WERE MIXED WITH THE ADDN. OF 70-100PERCENT WATER. THE MIXT. WAS ALLOWED TO STAND WHILE THE TEMP. WAS LOWERED TO 35-40DEGREES. THEN THE MIXT. WAS THIXOTROPICALLY THINNED BY PUTTING INTO IT A STEAM GENERATOR AND THE REMAINING WATER, AND THEN IT WAS MIXED A 2ND TIME. FACILITY: ALL UNION SCIENTIFIC RESEARCH INSTITUTE OF CONSTRUCTION MATERIALS AND CONSTRUCTION.

UNCLASSIFIED

APPROVED FOR RELEASE: 09/17/2001 CIA-RDP86-00513R002201620004-4"

"APPROVED FOR RELEASE: 09/17/2001 CIA-RDP86-00513R002201620004-4

1/2 034 UNCLASSIFIED PROCESSING DATE--09OCT70

TITLE--CHANGES IN THE AMOUNT OF ERYTHROCYTES AND THEIR FUNCTION IN ACUTE PERITONITIS -U-

AUTHOR-(04)-ROTENBERG, D.L., NEYKO, YE.M., KRYZHANOVSKIY, N.A., KRYZHANOVSKIY, G.A.

COUNTRY OF INFO--USSR

SOURCE--VESTNIK KHIRURGII IMENI I. I. GREKOVA, 1970, VOL 104, NR 2 PP 57-59

DATE PUBLISHED--------70

SUBJECT AREAS--BIOLOGICAL AND MEDICAL SCIENCES

TOPIC TAGS--ERYTHROCYTE, RESPIRATION, BLOOD CHEMISTRY, DOG, PERITONEUM, HEMOGLOBIN, HEMATOCRIT, HYPOXIA

CONTROL MARKING--NO RESTRICTIONS

DOCUMENT CLASS--UNCLASSIFIED

PROXY REEL/FRAME--1985/1731 STEP NO--UR/0589/70/104/002/0057/0059

CIRC ACCESSION NO--AP0101784

UNCLASSIFIED

APPROVED FOR RELEASE: 09/17/2001 CIA-RDP86-00513R002201620004-4"

"APPROVED FOR RELEASE: 09/17/2001 CIA-RDP86-00513R002201620004-4

2/2 034 UNCLASSIFIED PROCESSING DATE--09OCT70

CIRC ACCESSION NO--AP0101784

ABSTRACT/EXTRACT--(U) GP-0- ABSTRACT. THE DYNAMICS OF CHANGES IN A QUANTITATIVE CORRELATION OF VARIOUS VOLUMES OF ERYTHROCYTES WAS OBSERVED, SIMULTANEOUSLY THE DEGREE OF DISTRUBANCES IN RESPIRATORY PROPERTIES OF BLOOD WAS STUDIED ON THE MODEL OF ACUTE PERITONITIS IN DOGS. THESE STUDIES WERE MADE WITH THE AID OF A CONDUCTOMETRIC METHOD OF DRAWING THE ERYTHROCYTES VOLUME DISTRIBUTION CURVES, AND ALSO USING THE VAN SLAKE APPARATUS WITH AN ION MAGNETIC MIXER FOR QUANTITATIVE DETERMINATION OF BLOOD GASES AND STUDYING THE OXYHEMOGLOBIN DISSOCIATION PROCESS. IN ADDITION, HEMOGLOBIN AND HEMATOCRIT INDICES WERE RECORDED. THESE STUDIES HAVE DEMONSTRATED THAT IN ACUTE PERITONITIS ALONG WITH INTENSIFICATION OF THE INFLAMMATORY PROCESS RELATIVE POLYCYTHEMIA, ANICYTOSIS WITH A PREDOMINANCE OF ENLARGED FORMS OF ERYTHROCYTES ARE INCREASED, AND ALSO DISTURBANCES IN THE BLOOD RESPIRATORY FUNCTION WITH TYPICAL SIGNS OF CIRCULATORY HYPOXIA ARE ENHANCED.

UNCLASSIFIED

APPROVED FOR RELEASE: 09/17/2001 CIA-RDP86-00513R002201620004-4"

"APPROVED FOR RELEASE: 09/17/2001 CIA-RDP86-00513R002201620004-4

Acc. Nr.: AT0046709

Ref. Code: 21RC146

USSR

UDC 531.383
62-505

KRYZHANOVSKIY, G.A.

"Synthesis of Insensitive Controls in a Circuit for the Stabilization of Gyrostabilizers"

Sintez malochuvstvitel'nykh upravleniy v tsepi stabilizatsii girostabilizatorov (cf. English above), Leningrad, Izvestiya Vysshikh Uchebnykh Zavedeniy, Priborostroyeniye, 1970, No 1, pp 97-102

4

4

Real/Frame
19790012

APPROVED FOR RELEASE: 09/17/2001 CIA-RDP86-00513R002201620004-4"

"APPROVED FOR RELEASE: 09/17/2001 CIA-RDP86-00513R002201620004-4

AT0046709

Translation:

The results of variable structure system theory (Ref 1) and optimal process theory are used to synthesize the control in a gyrostabilizer stabilization circuit such that the control is insensitive to variation of the gyro-stabilizer parameters and is optimal in a given sense. An example is presented of the simulation of the operation of a gyrostabilizer during gyro rundown with $H(t) = H_0 - bt + at^2$ and the use of the synthesized insensitive control demonstrates its high qualities.

2/2

19790013

APPROVED FOR RELEASE: 09/17/2001 CIA-RDP86-00513R002201620004-4"

"APPROVED FOR RELEASE: 09/17/2001 CIA-RDP86-00513R002201620004-4

USSR UDC 616.981.55-092.9-085.214.22-059:615.221]-07:616.832-008-07

KRYZHANOVSKIY, G. N., SHEYKHON, F. D., and IGON'KINA, G. I., Institute of Normal and Pathological Physiology, USSR Academy of Medical Sciences

"Effect of Some Phenothiazine Compounds and α-Adrenergic Blocking Agents on Spinal Cord Activity After Disruption of the Inhibitory Mechanisms by Tetanus Toxin"

Moscow, Farmakologiya i Toksikologiya, No 3, 1973, pp 276-280

Abstract: Intravenous injection of chlorpromazine (0.75 mg/kg) resulted in deep depression of background and trace electrical activity of the extensor and flexor muscles in rats with local tetanus and intact spinal cord but only mild inhibition of evoked activity. However, in animals with transected spinal cord, chlorpromazine in the same dose produced the opposite effect -- intensification of background and especially trace activity. Chlorpromazine also intensified the electrical activity of the muscles in animals without tetanus but with transected spinal cord. The α-adrenergic blocking agents phentolamine and to a lesser extent dihydroergotoxin also inhibited electrical activity in rats with intact spinal cord and intensified it in the injured animals. Trifluoperazine had virtually no effect on animals with tetanus whether their spinal cord was intact or not.

1/1

APPROVED FOR RELEASE: 09/17/2001 CIA-RDP86-00513R002201620004-4"

"APPROVED FOR RELEASE: 09/17/2001 CIA-RDP86-00513R002201620004-4

USSR

UDC 615.372:576.851.551].033.81.018.1

BONDARCHUK, N. G., KRYZHANOVSKIY, G. N., and ROZANOV, A. Ya., Chair of Biochemistry, Odessa University imeni I. I. Mechnikov, and Laboratory of the Pathophysiology of Infection Intoxications, Institute of Normal and Pathological Physiology, Academy of Medical Sciences USSR, Moscow

"The Effect of Natitoxin on Tetanus Toxin Fixation by Subcellular Structures of the Brain"

Moscow, Byulleten' Eksperimental'noy Biologii i Meditsiny, Vol 75, No 3, 1973, pp 39-42

Abstract: Experimental findings indicate that purified tetanus toxin labeled with I^{131} is bound by the so-called crude mitochondria fraction of guinea pig brain, which includes mitochondria, synaptosomes, and myelin fragments. The largest portion of the toxin is bound by synaptosomes, a smaller by myelin fragments, and the smallest by mitochondria. Tetanus toxin neutralized by antitoxin is also bound by these structures but to a somewhat lesser extent. No such reduction in fixation occurs when tetanus toxin and antitoxin are added to the crude mitochondria extract simultaneously. The data support the previously advanced hypothesis that the tetanospasmin molecule has separate sites at which fixation to nervous tissue and to antitoxin takes place.

1/1

APPROVED FOR RELEASE: 09/17/2001 CIA-RDP86-00513R002201620004-4"

"APPROVED FOR RELEASE: 09/17/2001 CIA-RDP86-00513R002201620004-4

USSR

UDC 612.822.1:547.952]:576.851.551.097.29-06:
612.015.12

KRYZHANOVSKIY, G. N. and SAKHAROVA, O. P., Laboratory of the Pathophysiology of Infectious Intoxications, Institute of Normal and Pathological Physiology, Academy of Medical Sciences USSR, Moscow

"Effect of Neuraminidase on the Protagon-Tetanus Toxin Complex"

Moscow, Byulleten' Eksperimental'noy Biologii i Meditsiny, No 6, 1972, pp 36-38

Abstract: The addition of neuraminidase (5 to 50 mg/ml) to a mixture of protagon (50 mg) homogenized in 0.85% NaCl solution and tetanus toxin (1 mg) resulted in the appearance of sialic acid and tetanus toxin in the supernatant. The effect was dose-dependent: the larger the amount of neuraminidase added, the greater the amount of sialic acid and tetanus toxin in the supernatant. This was caused by the splitting off of sialic acid from the gangliosides. Tetanus toxin is bound with gangliosides and, consequently, with its receptor in brain tissue through ganglioside sialic acid.

1/1

APPROVED FOR RELEASE: 09/17/2001 CIA-RDP86-00513R002201620004-4"

"APPROVED FOR RELEASE: 09/17/2001 CIA-RDP86-00513R002201620004-4

USSR UDC 616.74-018.83-02:576.851.551.097.29

POZDNYAKOV, O. M., POLGAR, A. A., SMIRNOVA, V. S. and [redacted], G. N., Electron Microscopy Group, Laboratory of Pathophysiology of Infections-Intoxications, Institute of Normal and Pathological Physiology of the Academy of Medical Sciences USSR, Moscow

"Change in the Ultrastructure of the Neuromuscular Junction Under the Action of Tetanus Toxin"

Moscow, Byulleten' Eksperimental'noy Biologii i Meditsiny, Vol 74, No 7, 1972, pp 113-116

Abstract: Changes in the ultrastructure of the neuromuscular junction of the rat diaphragm were studied 3-5 hours after intramuscular injection of $2 \cdot 10^5$ DLM of tetanus toxin. The general relationship of structures remained intact, and changes were noted mainly in the axon terminal, the most marked of which was an increase in the number of presynaptic vesicles, most of which appeared normal. The number of matrix density of mitochondria in axon terminals was increased. Some injury and degeneration of the presynaptic terminals was noted. It is suggested that the observed changes are consistent with damage to the axon membrane leading to a decreased release of neurotransmitter with accumulation in the axon terminal.

1/1

APPROVED FOR RELEASE: 09/17/2001 CIA-RDP86-00513R002201620004-4"

"APPROVED FOR RELEASE: 09/17/2001 CIA-RDP86-00513R002201620004-4

Physiology

USSR UDC 612.816.018.014.46:576.851.097.29

KRYZHANOVSKIY, G. N., POZDNYAKOV, O. M., D'YAKONOVA, M. V., POLGAR, A. A., and SMIRNOVA, V. S., Laboratory of the Pathological Physiology of infectious Intoxications and Electron Microscopy Group, Institute of Normal and Pathological Physiology, Academy of Medical Sciences USSR

"Impairment of Neurosecretion in the Myoneural Junctions of Muscle Poisoned With Tetanus Toxin"

Moscow, Byulleten' Eksperimental'noy Biologii i Meditsiny, No 12, 1971, pp 27-31

Abstract: Electrophysiological and electron-microscopic study was conducted of the neuromuscular synapses in the rat diaphragm locally poisoned with tetanus toxin ($2 \cdot 10^5$ MLD). Injection of the toxin resulted in a progressive decrease in the amplitude of the respiratory burst in the poisoned diaphragm, but it had no effect on the actual nature of the respiratory electrical activity. The animals died in 7 to 9 hours with symptoms of paralysis of the respiratory muscles. A comparison of the histograms for intact neuromuscular preparations isolated from the diaphragm with those for preparations isolated 3 to 3-1/2 hours after injection of the toxin revealed a sharp decrease in the level of spontaneous synaptic activity in the poisoned muscles, an indication

APPROVED FOR RELEASE: 09/17/2001 CIA-RDP86-00513R002201620004-4"

"APPROVED FOR RELEASE: 09/17/2001 CIA-RDP86-00513R002201620004-4

USSR

KRYZHANOVSKIY, G. N., et al., Byulleten' Eksperimental'noy Biologii i Meditsiny, No 12, 1971, pp 27-31

of impairment of the neurosecretory apparatus. Injection of inactivated toxin did not impair neurosecretion. Electron-microscopic examination showed that the neuromuscular synapse in the poisoned muscle retained its structure. Changes were noted only in the axon terminal in the form of swelling of the mitochondria and increased number of synaptic vesicles. There were no changes in the subsynaptic structures.

2/2

APPROVED FOR RELEASE: 09/17/2001 CIA-RDP86-00513R002201620004-4"

"APPROVED FOR RELEASE: 09/17/2001 CIA-RDP86-00513R002201620004-4

Therapy

USSR UDC 616.981.551-085.373.39-032:611:819.57

KRYZHANOVSKIY, G. N. and KRASNOVA, N. M., Laboratory of the Pathological Physiology of Intoxication of Infections, Institute of Normal and Pathological Physiology, Academy of Medical Sciences USSR

"Intracisternal Injection of Tetanus Antitoxin in Experimental Tetanus"

Moscow, Byulleten' Eksperimental'noy Biologii i Meditsiny, No 5, 1971, pp 38-42

Abstract: Intracisternal injection of tetanus antitoxin into rats with the ascending or hematogenous form of tetanus had a greater therapeutic effect than either the intravenous or intramuscular method. In the early stage of the disease (36 hours) when intravenous injection of the antitoxin did not prevent the animals from dying, intracisternal injection saved the lives of 50% of the animals, and the life-span of nonsurvivors that died was one and one-half times longer than the animals given intravenous injections of antibody. In the later stages of the diseases (after 48 to 50 hours with the ascending form and after 42 to 44 hours with the hematogenous form) neither intravenous nor intramuscular injection of the antitoxin had any effect on the course of the disease (all the animals died at about the same time as the untreated control), but intracisternal injection, although it did not prevent

1/2

APPROVED FOR RELEASE: 09/17/2001 CIA-RDP86-00513R002201620004-4"

"APPROVED FOR RELEASE: 09/17/2001 CIA-RDP86-00513R002201620004-4

USSR

KRYZHANOVSKIY, G. N. and KRASNOVA, N. M., Byulleten' Eksperimental'noy Biologii i Meditsiny, No 5, 1971, pp 38-42

death, lengthened their survival time considerably (1 1/2 times). The survival time of these animals at this stage was somewhat longer than, or just as long as, that of the animals that received the antitoxin intravenously in the early period of the disease (after 36 hours).

2/2

APPROVED FOR RELEASE: 09/17/2001 CIA-RDP86-00513R002201620004-4"

"APPROVED FOR RELEASE: 09/17/2001 CIA-RDP86-00513R002201620004-4

USSR

UDC 616.981.551-092:612.833.6

KRYZHANOVSKIY, G. N., and SHEYKHON, F. D., Laboratory of the Pathophysiology of Infectious Intoxications Institute of Normal and Pathological Physiology, Academy of Medical Sciences USSR, Moscow

"Descending Facilitating and Inhibiting Effects From the Medulla Oblongata on the Monosynaptic Reflexes in Tetanus Intoxication"

Moscow, Byulleten' Eksperimental'noy Biologii i Meditsiny, Vol 70, No 7, Jul 70, pp 34-39

Abstract: The effect of stimulation of the facilitating and inhibiting structures of the medulla oblongata on the monosynaptic reflexes in local tetanus was studied in experiments on cats under mild nembutalchloralose anesthesia. With the development of tetanus intoxication, facilitation of monosynaptic reflexes increased and polysynaptic activity appeared upon stimulation of the facilitating structures. Stimulation of the inhibiting structures, instead of the normally characteristic depression, causes facilitation of monosynaptic reflexes and appearance of polysynaptic activity on the side of injection. This effect is noted immediately or during the first dozen milliseconds after stimulation, i.e., at a time when inhibition is most pronounced under normal conditions. On the side contralateral to toxin injection, inhibition is preserved upon stimulation of the same structures. In local tetanus, the appearance of excitation reactions instead of inhibition is

1/2

APPROVED FOR RELEASE: 09/17/2001 CIA-RDP86-00513R002201620004-4"

"APPROVED FOR RELEASE: 09/17/2001 CIA-RDP86-00513R002201620004-4

USSR

KRYZHANOVSKIY, G. N., et al, Byulleten' Eksperimental'noy Biologii i Meditsiny, Vol 70, No 7, Jul 70, pp 34-39

explained by the disappearance, under the effect of the toxin, of the normally prevailing inhibiting component from mixed inhibition-excitation influences, which motorneurons sustain upon stimulation of inhibiting structures and which increase due to the activity of interneurons.

2/2

APPROVED FOR RELEASE: 09/17/2001 CIA-RDP86-00513R002201620004-4"

"APPROVED FOR RELEASE: 09/17/2001 CIA-RDP86-00513R002201620004-4

1/2 029 UNCLASSIFIED PROCESSING DATE--18OCT70

TITLE--ACTION OF VALIUM (DIAZEPAM) ON THE CONVULSION SYNDROME DURING TETANUS -U-

AUTHOR-(02)-KRYZHANOVSKIY, G.N., DANILOVA, YE.Z.

COUNTRY OF INFO--USSR

SOURCE--FARMAKOL. TOKSIKOL. (MOSCOW) 1970, 33(2), 165-9

DATE PUBLISHED-------70

SUBJECT AREAS--BIOLOGICAL AND MEDICAL SCIENCES

TOPIC TAGS--TETANUS, RAT, MUSCLE RELAXANT, NEURON, SPINAL CORD, ANTICONVULSANT DRUG

CONTROL MARKING--NO RESTRICTIONS

DOCUMENT CLASS--UNCLASSIFIED

PROXY REEL/FRAME--1994/1168 STEP NO--UR/0390/70/033/002/0166/0169

CIRC ACCESSION NO--AP0115187

UNCLASSIFIED

APPROVED FOR RELEASE: 09/17/2001 CIA-RDP86-00513R002201620004-4"

"APPROVED FOR RELEASE: 09/17/2001 CIA-RDP86-00513R002201620004-4

2/2 029 UNCLASSIFIED PROCESSING DATE--26OCT70

CIRC ACCESSION NO--AP0115187

ABSTRACT/EXTRACT--(U) GP-0- ABSTRACT. VALIUM (DIAZEPAM) ADMINISTERED I.V. TO RATS AT 5-10 MG-KG HAD STRONG MYORELAXING ACTIVITY, AND IN THE SPINAL CORD REGION INHIBITED THE ACTIVITY OF INTERNEURONS DEVELOPING IN THE EFFERENT SYSTEM (DECREASED ELEC. ACTIVITY OF THE MUSCLE DURING LOCAL TETANUS) AND OF INTERNEURONS FACILITATING GENERALIZED ACTIVITY IN THE SPINAL CORD. FACILITY: INST. NORM. PATOL. FIZIOL., MOSCOW, USSR.

UNCLASSIFIED

APPROVED FOR RELEASE: 09/17/2001 CIA-RDP86-00513R002201620004-4"

"APPROVED FOR RELEASE: 09/17/2001 CIA-RDP86-00513R002201620004-4

USSR

UDC 616.981.551-092.9-07:616.24-005-072.7

KRYZHANOVSKIY, G. N., YESIPOVA, I. K., and KRAINCHEV, A. K., Institute of Normal and Pathological Physiology, Academy of Medical Sciences USSR, Moscow

"Changes in the Microcirculation of the Lungs in Experimental Tetanus"

Moscow, Byulleten' Eksperimental'noy Biologii i Meditsiny, No 1, 1973, pp 78-83

Abstract: At the height of tetanus, ascending or hematogenic, induced in rats by intramuscular or intravenous injection of lethal doses of the toxin, light microscopy revealed the following changes in pulmonary tissue: marked dilatation of the alveolar capillaries with numerous erythrocytes and indications of diapedetic bleeding; hemorrhages into the lumens of the bronchi; dilatation of the lumens of the lymphatics; contraction of the smooth muscles of the small veins; foci of atelectasis alternating with foci of ectasia. Electron microscopy revealed the following in the lungs of infected mice: alteration of the ultrastructure of the alveolar capillaries and formed blood elements; local destruction of the external cytoplasmatic membranes of endothelial and small alveolar cells, erythrocytes, leukocytes, and thrombocytes; formation and disintegration of vesicles on the surface of the endothelial cells; both vacuolation of erythrocytes and their gradual or instantaneous disintegration

1/2

APPROVED FOR RELEASE: 09/17/2001 CIA-RDP86-00513R002201620004-4"

"APPROVED FOR RELEASE: 09/17/2001 CIA-RDP86-00513R002201620004-4

USSR

KRYZHANOVSKIY, G. N., et al., Byulleten' Eksperimental'noy Biologii i Meditsiny, No 1, 1973, pp 78-83

into spherical fragments in the lumens of the capillaries. No signs of inflammation were noted except in two animals successfully treated with tetanus antitoxin and later sacrificed (both showed symptoms of serous-hemorrhagic pneumonia and bronchitis).

2/2

APPROVED FOR RELEASE: 09/17/2001 CIA-RDP86-00513R002201620004-4"

"APPROVED FOR RELEASE: 09/17/2001 CIA-RDP86-00513R002201620004-4

1/2 007 UNCLASSIFIED PROCESSING DATE--04DEC70

TITLE--OUTER SPHERE AND INNER SPHERE COMPLEXES OF COBALT II, NICKEL II, AND COPPER II -U-

AUTHOR-(04)-MIRONDOV, V.YE., MAKASHEV, YU.A., MAVRINA, E.YA., KRYZHANOVSKIY, M.M.

COUNTRY OF INFO--USSR

SOURCE--ZH. NEORG. KHIM. 1970, 15(5), 1301-4

DATE PUBLISHED--------70

SUBJECT AREAS--CHEMISTRY

TOPIC TAGS--COBLAT COMPLEX, NICKEL COMPLEX, COPPER COMPLEX, CHLROINE, BROMINE, NITRATE, SULFATE, STABILITY CONSTANT

CONTROL MARKING--NO RESTRICTIONS

DOCUMENT CLASS--UNCLASSIFIED

PROXY REEL/FRAME--3008/0943 STEP NO--UR/0078/70/015/005/1301/1304

CIRC ACCESSION NO--AP0137971

UNCLASSIFIED

APPROVED FOR RELEASE: 09/17/2001 CIA-RDP86-00513R002201620004-4"

"APPROVED FOR RELEASE: 09/17/2001 CIA-RDP86-00513R002201620004-4

2/2 007 UNCLASSIFIED PROCESSING DATE--04DEC70

CIRC ACCESSION NO--AP0137971

ABSTRACT/EXTRACT--(U) GP-0- ABSTRACT. STABILITY CONSTS. WERE DETD. FOR INNER AND OUTER SPHERE COMPLEXES OF CO(II), NI(II), AND CU(II) HEXAAQUA IONS WITH HALIDES, THIOCYANATE, SULFATE, AND NITRATE IONS. THE TENDENCY TO INNER AND OUTER SPHERE INTERACTION DECREASES IN GOING FROM CL PRIME NEGATIVE TO BR PRIME NEGATIVE. THIS IS ATTRIBUTED TO THE ELECTROSTATIC NATURE OF THE OUTER SPHERE BONDS. THE TENDENCY FOR NITRATE AND SULFATE IONS IN THE CU COMPLEXES TO ENTER THE INNER SPHERE IS SMALL AND APPROX. THE SAME. THE HIGHER STABILITY OF THE CU SULFATE COMPLEXES IS RELATED TO THE HIGH STABILITY OF INNER SPHERE SULFATE ASSOCNS. FACILITY: LENINGRAD. GOS. PEDAGOG. INST. IM. GERTSENA, LENINGRAD, USSR.

UNCLASSIFIED

APPROVED FOR RELEASE: 09/17/2001 CIA-RDP86-00513R002201620004-4"

"APPROVED FOR RELEASE: 09/17/2001 CIA-RDP86-00513R002201620004-4

1/2 034 UNCLASSIFIED PROCESSING DATE--09OCT70

TITLE--CHANGES IN THE AMOUNT OF ERYTHROCYTES AND THEIR FUNCTION IN ACUTE PERITONITIS -U-

AUTHOR-(04)-ROTENBERG, D.L., NEYKO, YE.M., KRYZHANOVSKIY, [illegible], KRYZHANOVSKIY, G.A.

COUNTRY OF INFO--USSR

SOURCE--VESTNIK KHIRURGII IMENI I. I. GREKOVA, 1970, VOL 104, NR 2 PP 57-59

DATE PUBLISHED--------70

SUBJECT AREAS--BIOLOGICAL AND MEDICAL SCIENCES

TOPIC TAGS--ERYTHROCYTE, RESPIRATION, BLOOD CHEMISTRY, DOG, PERITONEUM, HEMOGLOBIN, HEMATOCRIT, HYPOXIA

CONTROL MARKING--NO RESTRICTIONS

DOCUMENT CLASS--UNCLASSIFIED

PROXY REEL/FRAME--1985/1731 STEP NO--UR/0589/70/104/002/0057/0059

CIRC ACCESSION NO--AP0101784

UNCLASSIFIED

APPROVED FOR RELEASE: 09/17/2001 CIA-RDP86-00513R002201620004-4"

"APPROVED FOR RELEASE: 09/17/2001 CIA-RDP86-00513R002201620004-4

2/2 034 UNCLASSIFIED PROCESSING DATE--09OCT70

CIRC ACCESSION NO--AP0101784

ABSTRACT/EXTRACT--(U) GP-0- ABSTRACT. THE DYNAMICS OF CHANGES IN A QUANTITATIVE CORRELATION OF VARIOUS VOLUMES OF ERYTHROCYTES WAS OBSERVED, SIMULTANEOUSLY THE DEGREE OF DISTRUBANCES IN RESPIRATORY PROPERTIES OF BLOOD WAS STUDIED ON THE MODEL OF ACUTE PERITONITIS IN DOGS. THESE STUDIES WERE MADE WITH THE AID OF A CONDUCTOMETRIC METHOD OF DRAWING THE ERYTHROCYTES VOLUME DISTRIBUTION CURVES, AND ALSO USING THE VAN SLAKE APPARATUS WITH AN ION MAGNETIC MIXER FOR QUANTITATIVE DETERMINATION OF BLOOD GASES AND STUDYING THE OXYHEMOGLOBIN DISSOCIATION PROCESS. IN ADDITION, HEMOGLOBIN AND HEMATOCRIT INDICES WERE RECORDED. THESE STUDIES HAVE DEMONSTRATED THAT IN ACUTE PERITONITIS ALONG WITH INTENSIFICATION OF THE INFLAMMATORY PROCESS RELATIVE POLYCYTHEMIA, ANICYTOSIS WITH A PREDOMINANCE OF ENLARGED FORMS OF ERYTHROCYTES ARE INCREASED, AND ALSO DISTURBANCES IN THE BLOOD RESPIRATORY FUNCTION WITH TYPICAL SIGNS OF CIRCULATORY HYPOXIA ARE ENHANCED.

UNCLASSIFIED

APPROVED FOR RELEASE: 09/17/2001 CIA-RDP86-00513R002201620004-4"

"APPROVED FOR RELEASE: 09/17/2001 CIA-RDP86-00513R002201620004-4

USSR UDC: 53.07/.08+53.001.5

BARABASH, L. Z., KRYZHANOVSKIY, O. I., LEBEDEV, P. I.

"A Device for Feeding the Deflecting Plates of a Ring Accelerator"

USSR Author's Certificate No 307542, Division H, filed 31 Mar 70, published 5 Aug 71 (from RZh-Fizika, No 4, Apr 72, Abstract No 4A516 P)

Translation: Rapid discharge of the deflecting voltage from the plates of an electrostatic inflector is extensively used for single-revolution injection in cyclic accelerators. An impulse thyratron is ordinarily used for discharging the inflector capacitance. In the initial part of the acceleration period, the deflection voltage across the inflector must be held close to the zero level. Ordinarily for this purpose the commutating thyratron is artificially maintained in the ignited conductive state through the entire acceleration period. This mode considerably cuts down the life of the thyratron and reduces the reliability of the injection system. This invention proposes a method of eliminating this disadvantage. An electronic switch is added to the primary circuit of the high-voltage rectifier of the inflector supply system to disconnect the rectifier supply immediately after voltage discharge across the inflector. Throughout the

1/2

APPROVED FOR RELEASE: 09/17/2001 CIA-RDP86-00513R002201620004-4"

"APPROVED FOR RELEASE: 09/17/2001 CIA-RDP86-00513R002201620004-4

USSR

BARABASH, L. Z. et al., USSR Author's Certificate No 307542

entire process of rectifier disconnection, the ignited state of the commutating thyratron is maintained by a low-voltage RC circuit connected through a decoupling diode. L. N. Kazanskiy.

2/2

APPROVED FOR RELEASE: 09/17/2001 CIA-RDP86-00513R002201620004-4"

"APPROVED FOR RELEASE: 09/17/2001 CIA-RDP86-00513R002201620004-4

KRYZHANOVSKIY, V.D.

Television

[illegible] Kryzhanovskiy, [illegible] Teoriya i Raschet Spetsialnykh Mechanizmov Mashin Pochtovoy Svyazi (Theory and Calculation of Special Mechanisms of Postal Machinery), 1972, 160 pages. Price 59 kopeks.

Television technology is most widespread. Used at first as a means of broadcasting it is now used in a great variety of spheres of human activity. The extensive penetration of television in various areas of the national economy, science, and culture requires both the [illegible] specialists and familiarization of broad segments of the population with the fundamentals of television.

This book describes the physical basis of television technology in [illegible]. It examines elements of lighting engineering, optics, and the physiology of vision, basic principles of television, the photoelectric effect, photocells, and photoelectronic multipliers.

Information is then given on the basics of electronic optics, a description of receiving and transmitting television tubes is given along with television scanning and spectra of television signals, and formation of the television signal.

Subsequent chapters are devoted to amplification of video signals, description of time-base generators, and the design of television antennas. Considerable interest is presented by sections of the book examining television receiving units, problems of the large screen, color and three-dimensional television, recording of television images, and the technology of applied television.

The concluding part is devoted to questions dealing with adjustment and regulation of television apparatus.

*** *** ***

Kryzhanovskiy, N. N., Teoriya i Raschet Spetsialnykh Mechanizmov Mashin Pochtovoy Svyazi (Theory and Calculation of Special Mechanisms of Postal Machinery), 1972, 160 pages. Price 59 kopeks.

The book examines the dynamics of electromagnetic drive and proposes calculation of the working ability of electric magnets. A description of apron hoists is given and a method of calculating them is cited. An analysis is made of complex systems for the vertical and horizontal transportation of cargoes. Elements of the theory of sorting containers are given. Various kinematic schemes of machine separators for letter [illegible] are described and fundamentals of theory of their operation are included. Methods of calculating various semiautomatic magazine and stamp [illegible] machines are cited.

The book is designed for engineers and mechanics engaged in design bureaus and production laboratories of postal enterprises. It may be useful to teachers and students in communications institutes and technicums.

*** *** ***

APPROVED FOR RELEASE: 09/17/2001 CIA-RDP86-00513R002201620004-4"

"APPROVED FOR RELEASE: 09/17/2001 CIA-RDP86-00513R002201620004-4

USSR

UDC 621.378.325

VANYUKOV, M. P., KRYZHANOVSKIY, V. I., SEREBRYAKOV, V. A., STARIKOV, A. D.

"Laser Systems for Generating High-Intensity Picosecond Light Pulses"

Moscow, Kvantovaya Elektronika, No. 5, 1971, pp 69-76

Abstract: A laser system with a radiation energy of 60-80 joules in a pulse of duration $(2-5)\cdot 10^{-11}$ sec was developed, and the energy densities of total surface and internal breakdown of active elements by pulses of various durations were determined. The authors note that a high-intensity laser system is required to heat a plasma up to thermonuclear temperatures and that the system should incorporate the possibility of producing radiation pulses of great power at a low divergence of the light beam. This paper is devoted to problems arising in developing the following: (1) a master generator of picosecond pulses with a radiation divergence close to the diffraction limit; (2) a multicascade amplifier system with minimum distortion of the wave front of the beam; (3) a nonaberrational optical system to concentrate radiation on the target. A multipass amplifier with an amplification coefficient of up to 10^5 was designed with which it was possible to obtain an output energy of 0.6 joule for a pulse length of $(5-10)\cdot 10^{-12}$ sec at an angle close to the diffraction limit while using the low-power master generator. Further amplification of the light beam raised the radiation energy up to 40 joules and provided a brightness in the diffraction core of the beam of $(4-5)\cdot 10^{19}$ w/sterad·cm^2 and an axial brightness of more

1/2

APPROVED FOR RELEASE: 09/17/2001 CIA-RDP86-00513R002201620004-4"

"APPROVED FOR RELEASE: 09/17/2001 CIA-RDP86-00513R002201620004-4

USSR

VANYUKOV, M. P., et al, Kvantovaya Elektronika, No. 5, 1971, pp 69-76

than 10^{20} w/sterad·cm^2. The authors claim that this is higher than the known values of brightness obtained in powerful laser systems by an order of magnitude. Studies also showed that the energy density in a pulse at which the active elements of the amplifier cascades begin to breakdown intensively is 5-6 joule/cm^2 and changes very little with a change in the duration of the laser pulse in the range $5 \cdot 10^{-9}$ - $5 \cdot 10^{-11}$ sec. Upon achieving these energy densities there was a light breakdown causing total dulling of the surface after only 4-5 bursts on the surface of the output end. In the opinion of the authors intensive self-focusing arising in the rods of the output amplifier cascades is primarily responsible for breakdown of the ends of the active elements. In neodymium glass there arise multiple intensive nets of self-focusing, a considerable portion of which end at the output face of the active element, and this determines the appearance of light breakdown at the face. In rods with a platinum admixture there were local breakdowns with the formation of bubbles, which in the case of self-focusing led to strong scattering of the radiation. The authors conclude that a further rise in the energy and power of the output radiation of solid state lasers will involve increasing the resistance of active elements to the action of the intense light field and the fabrication of active elements of greater cross section with higher optical homogeneity.

2/2

APPROVED FOR RELEASE: 09/17/2001 CIA-RDP86-00513R002201620004-4"

"APPROVED FOR RELEASE: 09/17/2001 CIA-RDP86-00513R002201620004-4

USSR

UDC 621.378.325

VANYUKOV, M. P., Doctor of Sciences, Deceased, KRYZHANOVSKIY, V. I., SEREBRYAKOV, V. A., SIZOV, V. N., STARIKOV, A. D.

"Multichannel Neodymium Glass Laser System with Picosecond Radiation Pulse Length"

Optiko Mekhanicheskaya Promyshlennost', No 12, 1972, pp 51-32.

Abstract: A powerful three-channel laser system made with neodimium glass with picosecond pulse length and an angular divergence near the diffraction limit is described. The output radiation energy of the device reaches 1,000 j with a pulse power of 10^{14} w.

1/1

APPROVED FOR RELEASE: 09/17/2001 CIA-RDP86-00513R002201620004-4"

"APPROVED FOR RELEASE: 09/17/2001 CIA-RDP86-00513R002201620004-4

USSR

ACCESSION NR: AP4006278 S/0286/63/000/023/0026/0028

AUTHOR: Kry*zhanovskiy, V. P.; Kuznetsov, A. Ya.

TITLE: Method of applying electroconductive layer to a dielectric surface. Class 21, No. 158936

SOURCE: Byul. izobret. i tovarn. znakov, no. 23, 1963, 28

TOPIC TAGS: electroconductive coating, dielectric surface coating, electroconductive film, dielectric coating, electroconductive layer, dielectric, copper sulfide coating

ABSTRACT: This Author Certificate introduces a method of depositing on a dielectric surface a conductive layer which is transparent to both visible and infrared radiation. The conductive substance is first evaporated in a vacuum and then treated with sulfur vapors also in a vacuum. To improve the conductivity and transparency of the layer, a copper sulfide layer is deposited on the dielectric.

Card 1/2

APPROVED FOR RELEASE: 09/17/2001 CIA-RDP86-00513R002201620004-4"

"APPROVED FOR RELEASE: 09/17/2001 CIA-RDP86-00513R002201620004-4

ACCESSION NR: AP4006278

ASSOCIATION: none

SUBMITTED: 04Jan63 DATE ACQ: 09Jan64 ENCL: 00

SUB CODE: SD NO REF SOV: 000 OTHER: 000

Card 2/2

APPROVED FOR RELEASE: 09/17/2001 CIA-RDP86-00513R002201620004-4"