"APPROVED FOR RELEASE: 09/17/2001 CIA-RDP86-00513R002201620005-3

Corrosion

USSR

UDC 669.71:620.193

GRABOVETSKIY, A. P., NEGREBETSKIY, K. N., and KRZHIVITSKIY, B. N., Kiev Technological Institute of Light Industry

"Corrosion-Fatigue Strength of Duralumin"

Moscow, Metallovedeniye i Termicheskaya Obrabotka Metallov, No 2, 1973, pp 77-78

Abstract: The effect of increasing temperature on the corrosion-fatigue strength of duralumin was experimentally investigated on D1T alloy specimens, 8 mm in diameter, subjected to the action of corrosive medium (tap-water, supplied in drops on the middle part of the specimen) and to cyclic loads, 10, 12, and 15 kgcm/mm^2 at 20 and 70°C. The test results are discussed by reference to diagrams of longevity and endurance. The longevity increased with increasing temperature the lower the load. It is assumed that the protective oxide film developing at increased temperature is more durable than the oxide film developing at normal temperatures which gives rise to the increase of longevity of specimens under given test conditions. The demonstrated dependence of protective film properties on mechanical loads can be explained by more intensive cracking of the oxide film under the action of high loads. Two figures.

1/1

APPROVED FOR RELEASE: 09/17/2001 CIA-RDP86-00513R002201620005-3"

"APPROVED FOR RELEASE: 09/17/2001 CIA-RDP86-00513R002201620005-3

UDC 621.373.826

USSR

VANYUKOV, M. P., KRYZHANOVSKIY, V. I., SEREBRYAKOV, V. A., STARIKOV, A. D.

"Laser Systems for Generation of Picosecond High-Brightness Light Pulses"

V sb. Kvant. elektronika (Quantum Electronics--collection of works), Moscow, No 5, 1971, pp 69-76 (from RZh-Radiotekhnika, No 1, 1972, Abstract No 1D346)

Translation: A laser system with a radiation energy of 60-80 joules in a pulse of duration $(2-5)\cdot 10^{-11}$ seconds was developed, and the energy densities of the total surface and internal destruction of the active elements by pulses of different duration were determined. A multipass amplifier circuit with an amplification coefficient up to 10^3 was created, which, on using a low-power master oscillator, permitted an output energy of 0.6 joules to be obtained with a pulse duration of $(5-10)\cdot 10^{-12}$ seconds at an angle close to the diffraction limit. Further amplification of the light beam permitted an increase in the radiation energy to 40 joules. This insured a brightness in the diffraction core of the beam of $(4-5)\cdot 10^{19}$ watts/steradian-cm^2 and an axial brightness of more than 10^{20} watts/steradian-cm^2. There are 6 illustrations and an 18-entry bibliography.

1/1

APPROVED FOR RELEASE: 09/17/2001 CIA-RDP86-00513R002201620005-3"

"APPROVED FOR RELEASE: 09/17/2001 CIA-RDP86-00513R002201620005-3

AA0038345

UR 0482

Soviet Inventions Illustrated, Section I Chemical, Derwent, 3-70

237822 EFFLUENTS FURNACE BURNS low-calorie aqueous solutions containing organic toxic substances and is fitted out with a secondary combustion chamber 7 and with tubes 6 forming the effluents spray facility 5 and arranged right across the section of the combustion chamber 1 with port outlets. Primary air is blown 8 to the gas distributor 2 and mixed with gas for jetting out through 3 into the chamber 1; here it is ignited 4 to pass combustion products through to the secondary chamber 7. The actual solution of liquor for burning reaches the furnace through the ports and flows perpendicular to the combustion products at 200-250 m/sec. so as to provide the atomised effect and force a mix of combustion products and atomised fluid into the secondary chamber. The combustion chamber can be cooled by admitting secondary air from the cowl. In the secondary chamber, the liquor evaporates and organic toxic content is combusted. 24.12.65. as 1045156/23-26. ALABOVSKIY A.N and KRYZHANOVSKIY V.N. (14.7.69.) Bul.9/20.2.69. Class 12g. Int.Cl. B01j,

19731462

APPROVED FOR RELEASE: 09/17/2001 CIA-RDP86-00513R002201620005-3"

"APPROVED FOR RELEASE: 09/17/2001 CIA-RDP86-00513R002201620005-3

AA0038345

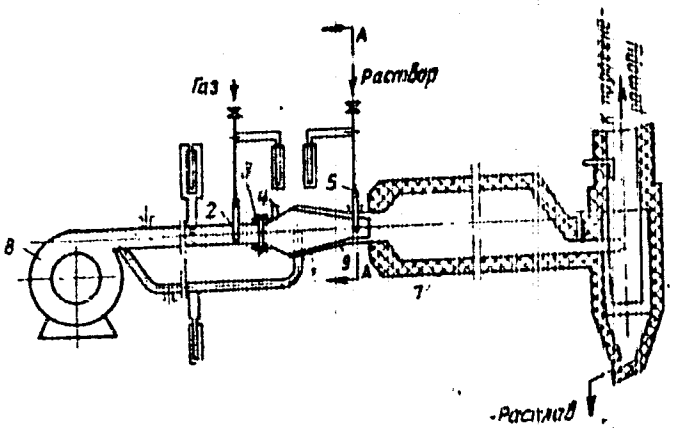

19731463

APPROVED FOR RELEASE: 09/17/2001 CIA-RDP86-00513R002201620005-3"

"APPROVED FOR RELEASE: 09/17/2001 CIA-RDP86-00513R002201620005-3

1/2 019 UNCLASSIFIED PROCESSING DATE--09OCT70

TITLE--SECONDARY RECRYSTALLIZATION IN COLD ROLLED SILICON STEEL ALLOYED IN THE ANNEALING PROCESS -U-

AUTHOR-(05)-AFANASYEV, S.V., BAKYATINSKIY, V.P., GORBACHEV, V.N., KRYZHANOVSKIY, V.V., MOLOTILOV, B.V.

COUNTRY OF INFO--USSR

SOURCE--IZV. AKAD. NAUK SSSR, SER. FIZ. 1970, 34(2), 276-80

DATE PUBLISHED--------70

SUBJECT AREAS--MATERIALS, MECH., IND., CIVIL AND MARINE ENGR

TOPIC TAGS--SILICON STEEL, METAL RECRYSTALLIZATION, COLD ROLLING, TRANSFORMER STEEL, ALLOY COMPOSITION, METAL TEXTURE, HIGH QUALITY STEEL

CONTROL MARKING--NO RESTRICTIONS

DOCUMENT CLASS--UNCLASSIFIED

PROXY REEL/FRAME--1995/0190 STEP NO--UR/0048/70/034/002/0276/0280

CIRC ACCESSION NO--AP0115894

UNCLASSIFIED

APPROVED FOR RELEASE: 09/17/2001 CIA-RDP86-00513R002201620005-3"

"APPROVED FOR RELEASE: 09/17/2001 CIA-RDP86-00513R002201620005-3

2/2 019 UNCLASSIFIED PROCESSING DATE--09OCT70

CIRC ACCESSION NO--AP0115894

ABSTRACT/EXTRACT--(U) GP-0- ABSTRACT. THE PROCESS OF SECONDARY RECRYSTN. IN THE PRESENCE OF S WAS STUDIED ON COLD ROLLED, HIGH PURITY TRANSFORMER STEEL SHEET 0.05, 0.08, AND 0.10 MM THICK TO DET. THE EFFECTS OF THE PRIMARY STRUCTURE, HEAT TREATMENT CONDITIONS, AND THE S CONTENT ON THE FINAL PRODUCT. THE STEEL CONTAINED C 0.007, MN 0.08, SI 3.05, P 0.006, S 0.0025, NI 0.04, CR 0.01, CU 0.05, AL 0.01, AND N 0.0107PERCENT. ALLOYING THE THIN SHEET IN THE ANNEALING PROCESS MADE IT POSSIBLE TO CONTROL THE SECONDARY RECRYSTN. THE STRUCTURE AND TEXTURE OF THE SECONDARY MATRIX DEPENDED ON BOTH THE INITIAL STRUCTURE AND THE AMT. OF S INTRODUCED BY DIFFUSION. AT RELATIVELY LOW S CONCNS. THE SECONDARY RECRYSTN. DEVELOPED A RIBBED TEXTURE WHEREAS AT HIGHER S CONCNS. IT RESULTED IN AN ORIENTATION NEAR (111) (110). A PRELIMINARY RECRYSTN. OWING TO HEAT TREATMENT AND A SUBSEQUENT STABILIZATION OF THE PRIMARY MATRIX BROUGHT ABOUT THE FORMATION OF A MORE PERFECT TEXTURE IN SECONDARY RECRYSTN. FACILITY: TSNIICHM IM. BARDINA, MOSCOW, USSR.

UNCLASSIFIED

APPROVED FOR RELEASE: 09/17/2001 CIA-RDP86-00513R002201620005-3"

"APPROVED FOR RELEASE: 09/17/2001 CIA-RDP86-00513R002201620005-3

1/2 038 UNCLASSIFIED PROCESSING DATE--02OCT70

TITLE--RELAXATION AND OPTICAL PROPERTIES OF A HARDENED EPOXY RESIN -U-

AUTHOR-(02)-TARATORIN, B.I., KRYZHANOVSKIY, V.V.

COUNTRY OF INFO--USSR

SOURCE--MEKH. POLIM. 1970, 6(1), 15-23

DATE PUBLISHED--------70

SUBJECT AREAS--MATERIALS

TOPIC TAGS--EPOXY RESIN, POLYMER CROSSLINKING, OPTIC PROPERTY, PHTHALIC ANHYDRIDE, MALEIC ANHYDRIDE, EXCITED STATE, MATERIAL DEFORMATION, COMPRESSIVE STRESS

CONTROL MARKING--NO RESTRICTIONS

DOCUMENT CLASS--UNCLASSIFIED

PROXY REEL/FRAME--1989/0812 STEP NO--UR/0374/70/006/001/0015/0023

CIRC ACCESSION NO--AP0107354

UNCLASSIFIED

APPROVED FOR RELEASE: 09/17/2001 CIA-RDP86-00513R002201620005-3"

"APPROVED FOR RELEASE: 09/17/2001 CIA-RDP86-00513R002201620005-3

2/2 038 UNCLASSIFIED PROCESSING DATE--02OCT70

CIRC ACCESSION NO--AP0107354

ABSTRACT/EXTRACT--(U) GP-0- ABSTRACT. THE RELAXATION PERIODS (TAU) OF THE DISCRETE KINETIC ENTITIES OF EPOXY RESINS (I) CROSSLINKED WITH METHYLTETRAHYDROPHTHALIC OR MALEIC ANHYDRIDE WERE DETD. BY LIGHT BIREFRINGENCE. TAY IS DEFINED BY THE RELATION DV-DT EQUALS MINUS (V MINUS V)-TAU, WHERE V IS THE FRACTION OF THE KINETIC ENTITIES IN THE EXCITED STATE AND V IS THE FRACTION OF THE KINETIC ENTITIES AT EQUIL. THE DETNS. OF TAU DURING COMPRESSION OF I AT A CONST. DEFORMATION RATE GAVE THE APPROX. RELATION T SUBMIN-10 PRIME2 APPROXIMATELY EQUAL TO 10 PRIME5 APPROXIMATELY EQUAL TO 1.781 (TAU IS GIVEN IN SEC).

UNCLASSIFIED

APPROVED FOR RELEASE: 09/17/2001 CIA-RDP86-00513R002201620005-3"

"APPROVED FOR RELEASE: 09/17/2001 CIA-RDP86-00513R002201620005-3

USSR

UDC 628.35

KARYUKHINA, T. A., KLEYN, S. A., SHANGINA, G. A., YANCOLENKO, L. V., and KRZHAPOL'SKAYA, L. Z., Moscow Construction Engineering Institute imeni V. V. Kuybyshev

"Biological Methods of Purifying Sewage From Chemical and Pharmaceutical Plants"

Moscow, Khimiko-Farmatsevticheskiy Zhurnal, No 11, 1971, pp 30-35

Abstract: The 1960-1969 literature on the subject is reviewed and the most effective methods discussed. In some instances, when the sewage contains no toxic compounds, it may be used directly for irrigation of fields. In most cases, a combined method yields the best results. Sewage containing large amounts of hormones must first be treated anaerobically. It is then aerated (waterfalls, air turbines, or other systems) for several hours up to 2 weeks, depending on what substances it contains. This aeration reduces the biological oxygen requirement by 90-95%. Neutralizers are added and the sewage is stirred until its pH becomes close to 7 (initial pH ranges from 2 to 10). Next, the sewage is kept standing in reservoirs. Harmless bacteria may be grown in it and later precipitated with chlorine. After adequate sedimentation of suspensoids, the sewage is run through sand and gravel filters,

1/2

APPROVED FOR RELEASE: 09/17/2001 CIA-RDP86-00513R002201620005-3"

"APPROVED FOR RELEASE: 09/17/2001 CIA-RDP86-00513R002201620005-3

USSR

KARYUKHINA, T. A., et al., Khimiko-Farmatsevticheskiy Zhurnal, No 11, 1971, pp 30-35

floating matter and deposits are collected, burned, and used as fertilizers or admixture to feeds. This treatment removes up to 95% of suspensoids. The filtrate may be drained into rivers and lakes, or it may be stored in reservoirs and be utilized during summer. Theoretical data indicate that practically any sewage can be purified adequately at reasonable cost.

'/2

APPROVED FOR RELEASE: 09/17/2001 CIA-RDP86-00513R002201620005-3"

"APPROVED FOR RELEASE: 09/17/2001 CIA-RDP86-00513R002201620005-3

USSR

UDC: 621.391.883.2

KRYZHIN, V. I.

"Interference Immunity of Signal Reception for Multiplex Phase Difference Modulated Signals"

V sb. Materialy Nauch.-tekhn. konf. Leningr. elektrotekhn. in-t svyazi. Vyp. 1 (Materials of the Scientific and Technical Conference of Leningrad Electrical Engineering Institute of Communications--collection of works, No 1), Leningrad, 1971, pp 113-118 (from RZh-Radiotekhnika, No 3, Mar 72, Abstract No 3A34)

Translation: An expression is found for calculating the probability of error in reception of signals with multiplex phase difference modulation when there is jitter in the channel and distortions between symbols due to clipping of the signal spectrum and nonlinearity of the phase frequency response of the communications channel. Resumé.

1/1

APPROVED FOR RELEASE: 09/17/2001 CIA-RDP86-00513R002201620005-3"

"APPROVED FOR RELEASE: 09/17/2001 CIA-RDP86-00513R002201620005-3

USSR

UDC:666.1.036.23

KRAS'KO, A. S., Engineer, KAKHANOVICH, V. S., TYUSHKEVICH, N. I., Candidates of Technical Sciences, CHEPURKIN, A. A., Engineer, Belorussian Affiliate of Power Institute Imeni, G. M. KRZHIZHANOVSKIY

"Frequency Sensor for Continuous Testing of Glass Fiber Thickness During Production"

Moscow, Steklo I Keramika, No 9, Sep 1970, Pages 16-18

Abstract: Methods currently used for testing the thickness of glass fiber are "passive," that is, performed after production and have low reliability. This article presents certain results from the investigation of a frequency method of testing the thickness of glass fiber during production. The method is based on the relationship between natural oscillating frequency of a drawn string and linear mass and tightness. An experimental model of a frequency sensor has been developed. Production tests of the sensor have confirmed its useability. The error does not exceed 4%, with 95% confidence. In the device, a vibrator forming one end support of the length of fiber drawn causes the fiber to oscillate, and the frequency of natural oscillations is measured by a photosensor.

1/1

APPROVED FOR RELEASE: 09/17/2001 CIA-RDP86-00513R002201620005-3"

"APPROVED FOR RELEASE: 09/17/2001 CIA-RDP86-00513R002201620005-3

USSR

UDC: 518.5:681.3.06

KRYZHKO, V. M.

"The Semi-Markov Process of Multiplication as a Model of a Medical Establishment"

Tr. VNII med. priborostr. (Works of the All-Union Scientific Research Institute of Medical Instrument Making), 1971, vyp. 1, pp 27-32 (from RZh-Kibernetika, No 12, Dec 71, Abstract No 12V890)

Translation: Problems of mathematical identification of processes encountered in medical establishments are considered. These processes are analyzed by using semi-Markov processes of multiplication.

Recurrent formulas are derived: for the average waiting time in a condition, for the average duration and variance of the time of transition from any state to the terminal condition. An example is given of numerical calculation of a system of medical examinations. Author's abstract.

1/1

APPROVED FOR RELEASE: 09/17/2001 CIA-RDP86-00513R002201620005-3"

"APPROVED FOR RELEASE: 09/17/2001 CIA-RDP86-00513R002201620005-3

USSR UDC: 621.373.431(088.8)

KERIMOV, O. Z., Power Engineering Institute imeni G. M. KRZHIZHANOVSKIY

"A Radio Pulse Oscillator with Shock Excitation of the Oscillatory System"

USSR Author's Certificate No 277881, filed 13 Jan 69, published 9 Dec 70 (from RZh-Radiotekhnika, No 6, Jun 71, Abstract No 6G273 P)

Translation: A radio pulse oscillator with shock excitation is proposed which contains a DC voltage source with a charging choke and isolating semiconductor diode, a storage capacitor , a commutator based on a thyristor, a video pulse voltage source for control of the commutator, and pulse transformers. To eliminate parasitic fluctuations in the controlling circuit of the thyristor commutator, the oscillator also contains an amplitude limiter in the form of a stabilitron which is connected in parallel with the control electrode-cathode section of the thyristor.

1/1

APPROVED FOR RELEASE: 09/17/2001 CIA-RDP86-00513R002201620005-3"

"APPROVED FOR RELEASE: 09/17/2001 CIA-RDP86-00513R002201620005-3

UDC 556.46 + 662.222.2

USSR

KSANDOPULO, G. I., KOLESNIKOV, B. Ya., ZAVADSKIY, V. A., ODNOROG, D. S., YELOVSKAYA, T. P., Alma-Ata

"Mechanism of Inhibition of Combustion of Hydrocarbon-Air Mixtures by Finely Dispersed Particles"

Fizika Goreniya i Vzryva, No 1, Mar 71, pp 92-99.

ABSTRACT: Inhibited atmospheric propane flames were studied by the method of sampling from the flame using a quartz microtube to take samples for mass-spectrometer analysis. The reaction was quenched in the samples taken in less than 50 μ sec by the adiabatic expansion of the stream of sampled gases moving through the capillary into the sample chamber. Analysis of the concentration profiles formed in the reaction zone of the flame indicate that the first summary process is that of fractionation of the initial fuel molecules. As the concentration of propane decreases, the concentration of its fragments increases. The process of inhibition by solid particles is reduced on the one hand to accelerated formation of formaldehyde and on the other hand to inhibition of its loss by recombination of the OH radical on the surface of the solid particles. The change in the effectiveness of inhibition is in proportion to the total surface area of particles and depends on their nature. This proves the heterogeneous mechanism of inhibition of combustion.

1/1

APPROVED FOR RELEASE: 09/17/2001 CIA-RDP86-00513R002201620005-3"

"APPROVED FOR RELEASE: 09/17/2001 CIA-RDP86-00513R002201620005-3

USSR UDC 535.214.4

KSANFOMALITI, L. V., Institute of Space Research, Academy of Sciences of the USSR, Moscow

"A Low-Noise Radiometer for the Infrared Range"

Moscow, Pribory i Tekhnika Eksperimenta, No 4, Jul/Aug 71, pp 192-195

Abstract: The author describes a radiometer with a receiver consisting of a metallic bolometer with impedance of approximately 30 ohms irised down to a diameter of 1.2 mm. Emission with wavelengths in excess of 7 microns is registered after isolation by an indium antimonide filter. The long-wave limit is determined by the properties of the bolometer. In order to avoid the difficulties involved in using a transformer for impedance matching, a transistorized amplifier is used, which enables registration of signals with a power of the order of 10^{-9} W at modulation frequencies of less than 35 Hz. A synchronous doubler is used at the output of the radiometer. The radiometer is used for ground-based astronomical observations.

1/1

APPROVED FOR RELEASE: 09/17/2001 CIA-RDP86-00513R002201620005-3"

"APPROVED FOR RELEASE: 09/17/2001 CIA-RDP86-00513R002201620005-3

USSR UDC 632.4:582.285.2:633.11

NILOVA, V. P. and KSENDOVA, E. N., All-Union Institute of Plant Protection, Leningrad

"Effect of Vitavax on Catalase Activity and Susceptibility of Wheat to Brown Rust"

Leningrad, Mikologiya i Fitopatologiya, No 4, 1972, pp 355-358

Abstract: The fingicide vitavax (5,6-dihydro-2-methyl-1,4-oxathiin-3-carboxanylid) is effective against brown rust of wheat because it lowers catalase activity in the plant. High catalase levels promote and prolong uredospore viability. Spraying a 0.5% solution on 7-day-old shoots of healthy plants reduced catalase activity for 2 weeks. When applied to the Saratovskaya 29 wheat variety (which is normally susceptible to wheat rust) several days before the plants were inoculated with Puccinia triticina Eriks. uredospores, the fungicide had a prophylactic action. When applied to the plants 2 days after they were infected, it had a therapeutic effect, judging by the marked decrease in catalase activity and absence of pustules, which were found on the control (untreated) shoots.

1/1

APPROVED FOR RELEASE: 09/17/2001 CIA-RDP86-00513R002201620005-3"

"APPROVED FOR RELEASE: 09/17/2001 CIA-RDP86-00513R002201620005-3

USSR UDC 621.791.72

KSENDZYK, G. V., Candidate of Technical Sciences, Institute of Electric Welding imeni Ye. o. Paton, Academy of Sciences Ukrainian SSR

"Calculation of the Speed of Circular Electroslag Surfacing with a Large Electrode"

Kiev, Avtomaticheskaya Svarka, No 2, Feb 74, pp 35-36

Abstract: Mathematical formulas are derived for determining the rate of electroslag surfacing when using a large electrode in the restoration of wor parts of circular configuration. It is shown that there is a relationship between the surfacing rate, electrode feed, and the ratio of electrode and surfaced layer cross sectional areas and that this relationship is more complex than in electroslag welding (or surfacing) with electrode wire. One figure, four bibliographic references.

1/1

APPROVED FOR RELEASE: 09/17/2001 CIA-RDP86-00513R002201620005-3"

"APPROVED FOR RELEASE: 09/17/2001 CIA-RDP86-00513R002201620005-3

USSR UDC 621.35.035.222.3

PETROVA, S. A., and KSENZHEK, O. S.

"A Study of Adsorption Diffusion Models for the Wetting of a Carbon-Oxygen Electrode"

Vopr. khimii i khim. tekhnol. Resp. mezhved. temat. nauch.- tekhn. sb. (Questions of the Chemistry and Chemical Technology. Republic Interscientific Topics in Scientific and Technical Works), Vyp 27, 1972, pp 191-197 (from Referativnyy Zhurnal -- Khimiya, No 8(II), 1973, Abstract No 8L223)

Translation: The adsorption-diffusion mechanism was thoroughly studied for the wetting of the carbon-oxygen electrode. The rate of propagation of the monomolecular film of the adsorbed water molecules from the micropores of the grains (G) of the carbon are inversely proportional to the distance from the external surface of G to the zone of adsorption. The time for the wetting of G in the case where the process of the volume surface coverage of G by the liquid precedes the coating of the entire inner surface of the pores with a monomolecular film is 6 to 28 hours. However, the velocity of the electrochemical stabilization of O_2 in G is very great. G may be impregnated by liquid simultaneously on all sides but the wetting of G may occur by means of the simultaneous impregnation of G of different layers. The time for wetting the electrode to a thickness of 1 mm, in this case, varies from 4 to 21

1/2

APPROVED FOR RELEASE: 09/17/2001 CIA-RDP86-00513R002201620005-3"

"APPROVED FOR RELEASE: 09/17/2001 CIA-RDP86-00513R002201620005-3

USSR

PETROVA, S. A., and KSENZHEK, O. S., Vopr. khimii i khim. tekhnol. Resp. mezhved. temat. nauch.-tekhn. sb., Vyp 27, 1972, pp 191-197

hours. The adsorption-diffusion mechanism gave a time of impregnation which was significantly less than actually observed and did not show a dependence between the polarization and the velocity of wetting. Therefore, this mechanism is insufficient to describe the process of wetting of the carbon electrode. (Author's abstract).

2/2

APPROVED FOR RELEASE: 09/17/2001 CIA-RDP86-00513R002201620005-3"

"APPROVED FOR RELEASE: 09/17/2001 CIA-RDP86-00513R002201620005-3

Organometallic Compounds

2

USSR

UDC 547.13:546.72 + 546.14/15

NESMEYANOV, A. N., KOCHETKOVA, N. S., MATERIKOVA, R. B., PALITSYN, N. P., KSENZENKO, V. I., and SOBOLEVA, T. S., Institute of Metal Organic Compounds, Academy of Sciences USSR

"Reaction of Ferrocene Derivatives With Bromine and Iodine"

Leningrad, Zhurnal Organicheskoy Khimii, Vol 9, No 2, Feb 73, pp 378-380

Abstract: Reaction of bromine and iodine with ferrocene substituted with electron donating and electron accepting substituents was studied. At -20° in heptane bromine decomposes ethyl- and 1,1'-diethylferrocene; with 1,1',3,3'-tetra-tert-butylferrocene it forms the tribromide of 1,1',3,3'-tetra-tert-butylferrocenium. At 50° in benzene iodine does not decompose ferrocene or its derivatives, forming addition products with various quantities of iodine. In general, presence of electron-donating substituents and reaction with strong oxidizers (Cl_2, Br_2) favor the decomposition of the ferrocene ring. In case of hindered derivatives or when the halogen is a weak oxidizer (iodine) mainly oxidation products are obtained, with an intact ferrocene ring. Oxidation to ferrocenium evidently preserves the system from further decomposition by the halogen.

1/1

APPROVED FOR RELEASE: 09/17/2001 CIA-RDP86-00513R002201620005-3"

"APPROVED FOR RELEASE: 09/17/2001 CIA-RDP86-00513R002201620005-3

USSR

UDC 669.71.004.2

ZAGORSKAYA, M. K., VULIKH, A. I., and KSENZENKO, V. I.

"Removal of Hydrogen Fluoride from Gases by the Use of Anion Exchangers"

Sb. nauchno. tr. NII tsvetn. met. (Collection of Scientific Works of the Scientific Research Institute of Nonferrous Metallurgy), 1970, No 31, pp 133-142 (from RZh-Metallurgiya, No 12, Dec 70, Abstract No 12 G229 by authors)

Translation: An investigation was made of the sorption of HF from mixtures with air by anion exchangers AV-17, AV-17F, EDE-10P, AN-2F, AN-21, and AN-1. Sorption takes place mainly through the complexing of HF with amino groups of the anion exchangers. The dynamic capacity of the anion exchangers in removing from ~ 1 to $5 \cdot 10^{-4}$ mg/l HF from gases ranges from 10 to 20 mmol. HF/g of matrix. In HF desorption by water from strongly basic and intermediate-base anion exchangers, solutions of $\sim 10\%$ HF are obtained. The method is recommended for use in purifying waste gases containing HF. Six illustrations. Two tables. Bibliography with 16 titles.

1/1

APPROVED FOR RELEASE: 09/17/2001 CIA-RDP86-00513R002201620005-3"

"APPROVED FOR RELEASE: 09/17/2001 CIA-RDP86-00513R002201620005-3

USSR UDC 632.952:581.1 + 634.75/721

POLYAKOV, I. M., NILOVA, V. P., KSENDZOVA, E. N., ZAHUBINA, M. A., RAKITINA, R. N., All-Union Institute of Plant Protection, Leningrad, All-Union Academy of Agricultural Sciences imeni V. I. Lenin

"Investigation of the Nature of Nitrafen Action on Berry Cultures"

Moscow, Khimiya v Sel'skom Khozyaystve, Vol 8, No 6, Jun 70, pp 31-34

Abstract: The study was carried out on first year "Festival'naya" strawberries and black currant of the "Liya Productive" and "Lakston" line. The plants were treated in early spring, the strawberries being sprayed twice at a week's interval with a 1% nitrafen solution and the currants once with a 2% solution. The leaves were subjected to biochemical analysis 20 days later and the fruit was checked as it ripened. The leaves of the treated strawberry plants exhibited higher levels of chlorophyll, carbohydrates, and ascorbic acid in comparison to controls, there was no indication of peroxidase activity, the polyphenoloxidase activity was increased, and

1/2

APPROVED FOR RELEASE: 09/17/2001 CIA-RDP86-00513R002201620005-3"

"APPROVED FOR RELEASE: 09/17/2001 CIA-RDP86-00513R002201620005-3

USSR

POLYAKOV, I. M., et al, Khimiya v Sel'skom Khozyaystve, Vol 8, No 6, Jun 70, pp 31-34

the activity of cytochromoxidase and ascorbatoxidase was lowered. Both types of currant showed increased content of nitrogenous materials and chlorophyll under the influence of nitrafen, and their cytochromoxidase and peroxidase activity was elevated. As far as the content of carbohydrates and vitamin C and the activity of ascorbatoxidase are concerned, the two types of currant showed different effects to the action of nitrafen. Neither nutritional nor taste qualities of the berries were affected by treatment with nitrafen.

2/2

APPROVED FOR RELEASE: 09/17/2001 CIA-RDP86-00513R002201620005-3"

"APPROVED FOR RELEASE: 09/17/2001 CIA-RDP86-00513R002201620005-3

USSR K

KSENDZOVSKIY, V. R., GOZENBUK, L. G., SHAL'MAN, L. M.

"Automatic Control System for the Process of Roasting Materials in a Rotary Kiln"

Moscow, Ogneupory, No 3, Mar 70, pp 20-25

Abstract: A rotary kiln can be looked upon as a sequence of two objects for automatic control. The first section heats the material to the sintering temperature by heat exchange between the flows of the heat transfer medium and the material. The physical and chemical processes of sintering occur in the second section. Therefore, the automatic control system for a rotary kiln must consist of two systems. The measuring devices used in such a dual system to measure temperature in the sintering zone at input of raw material are described. In addition to checking of temperature and raw material input, the pressure in the hot and cold heads of the furnace, rarefaction in the smokestack, gas flow rate, and gas pressure are checked. A structural diagram of the automatic control system is presented. The automatic testing and 1/2

APPROVED FOR RELEASE: 09/17/2001 CIA-RDP86-00513R002201620005-3"

"APPROVED FOR RELEASE: 09/17/2001 CIA-RDP86-00513R002201620005-3

USSR

KSENDZOVSKIY, V. R., et al, Ogneupory, No 3, Mar 70, pp 20-25

control system for the rotary kiln has been checked at the Nporog refractory plant. The results of the tests have confirmed the effectiveness and economic expediency of using this system for automation of rotary kiln operation.

2/2

APPROVED FOR RELEASE: 09/17/2001 CIA-RDP86-00513R002201620005-3"

"APPROVED FOR RELEASE: 09/17/2001 CIA-RDP86-00513R002201620005-3

1/2 023 UNCLASSIFIED PROCESSING DATE--27NOV70

TITLE--AUTOMATIC CONTROL SYSTEM FOR THE PROCESS OF ROASTING MATERIALS IN A ROTARY KILN -U-

AUTHOR-(03)-KSENOOZOVSKIY, V.R., GOZENBUK, L.G., SHALMAN, L.M.

COUNTRY OF INFO--USSR

SOURCE--MOSCOW, OGNEUPORY, NO 3, MAR 70, PP 20-25

DATE PUBLISHED----MAR 70

SUBJECT AREAS--MECH., IND., CIVIL AND MARINE ENGR

TOPIC TAGS--ROASTING FURNACE, INDUSTRIAL AUTOMATIC CONTROL, TEMPERATURE MEASUREMENT, GAS ANALYZER, PRESSURE MEASUREMENT, THERMODYNAMIC EFFICIENCY

CONTROL MARKING--NO RESTRICTIONS

DOCUMENT CLASS--UNCLASSIFIED

PROXY REEL/FRAME--3006/0688 STEP NO--UR/0131/70/000/003/0020/0025

CIRC ACCESSION NO--AP0134630

UNCLASSIFIED

APPROVED FOR RELEASE: 09/17/2001 CIA-RDP86-00513R002201620005-3"

"APPROVED FOR RELEASE: 09/17/2001 CIA-RDP86-00513R002201620005-3

2/2 023 UNCLASSIFIED PROCESSING DATE--27NOV70

CIRC ACCESSION NO--AP0134430

ABSTRACT/EXTRACT--(U) GP-0- ABSTRACT. A ROTARY KILN CAN BE LOOKED UPON AS A SEQUENCE OF TWO OBJECTS FOR AUTOMATIC CONTROL. THE FIRST SECTION HEATS THE MATERIAL TO THE SINTERING TEMPERATURE BY HEAT EXCHANGE BETWEEN THE FLOWS OF THE HEAT TRANSFER MEDIUM AND THE MATERIAL. THE PHYSICAL AND CHEMICAL PROCESSES OF SINTERING OCCUR IN THE SECOND SECTION. THEREFORE, THE AUTOMATIC CONTROL SYSTEM FOR A ROTARY KILN MUST CONSIST OF TWO SYSTEMS. THE MEASURING DEVICES USED IN SUCH A DUAL SYSTEM TO MEASURE TEMPERATURE IN THE SINTERING ZONE AS INPUT OF RAW MATERIAL ARE DESCRIBED. IN ADDITION TO CHECKS OF TEMPERATURE AND RAW MATERIAL INPUT, THE PRESSURE IN THE HOT AND COLD HEADS OF THE FURNACE, RAREFACTION IN THE SMOKESTACK, GAS FLOW RATE, AND GAS PRESSURE ARE CHECKED. A STRUCTURAL DIAGRAM OF THE AUTOMATIC CONTROL SYSTEM IS PRESENTED. THE AUTOMATIC TESTING AND CONTROL SYSTEM FOR THE ROTARY KILN HAS BEEN CHECKED AT THE ZAPOROG REFRACTORY PLANT. THE RESULTS OF THE TESTS HAVE CONFIRMED THE EFFECTIVENESS AND ECONOMIC EXPEDIENCY OF USING THIS SYSTEM FOR AUTOMATION OF ROTARY KILN OPERATION.

UNCLASSIFIED

APPROVED FOR RELEASE: 09/17/2001 CIA-RDP86-00513R002201620005-3"

"APPROVED FOR RELEASE: 09/17/2001 CIA-RDP86-00513R002201620005-3

AA0042985

Soviet Inventions Illustrated, Section I Chemical, Derwent,

238735 VACUUM SUCTION CASTING UNIT comprises the holder (1) with the tray (2) designed as a bracket carried on journals (3) (4). These in turn are carried diametrically on the sleeve (5) surrounding the mould itself (6). The holder is turned on its journals to bring the tray in under the mould. The ram (8) forces the tray to the mould spout by raising the sleeve (5).

Ural'skiy Politekhnicheskiy Institut imeni S. M. Kirova

18

19761137

APPROVED FOR RELEASE: 09/17/2001 CIA-RDP86-00513R002201620005-3"

"APPROVED FOR RELEASE: 09/17/2001 CIA-RDP86-00513R002201620005-3

AA0042985

2.12.67 as 1200978/22-2. KSENOFONTOV.B.M. S.M.KIROV URAL POLYTECHNIC. (19.8.69) BUL 10/16.3.69. Class 31b[2]. Int.Cl.B 22d.

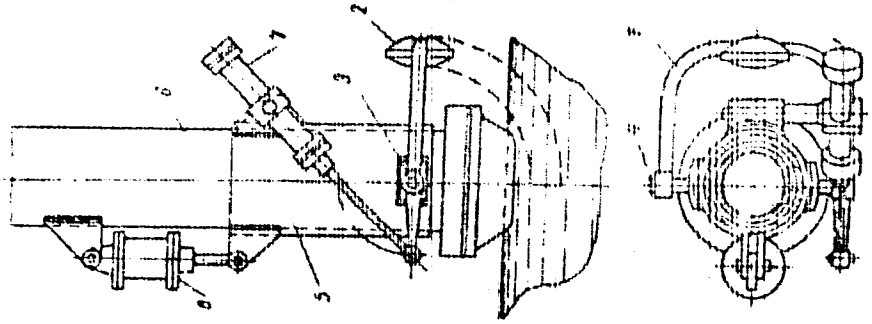

1/2

19761138

APPROVED FOR RELEASE: 09/17/2001 CIA-RDP86-00513R002201620005-3"

"APPROVED FOR RELEASE: 09/17/2001 CIA-RDP86-00513R002201620005-3

USSR

UDC 681.3(07)

KSENOFONTOV, I. S., LEMBERG, V. M., PUCHKO, A. N., ZHUKOVYEMEL'YANOV, O. D., and YAKOVLEV, K. A.

Elektronnyye Tsifrovyye Vychislitel'nyye Mashiny (Dopushcheno Ministerstvom Vysshego i Srednego Spetsial'nogo Obrazovaniya SSSR v Kachestve Uchebnogo Posobiya dlya Tekhnikumov) (Electronic Digital Computers [Authorized by the USSR Ministry of Higher and Secondary Specialized Education as a Textbook for Tekhnikums]), Moscow, "Mashinostroyeniye," 1970, pp 369-371

Translation:

Table of Contents

	Page
Foreword	3
Chapter 1. Arithmetic and Logical Fundamentals	5
1.1 Number Systems for Digital Computers	5
1.2 Forms of Number Representation in Digital Computers	8
1.3 Coding Negative Numbers in Digital Computers	14
1.4 Addition and Subtraction of Fixed-Point Numbers	19
1.5 Addition (Subtraction) of Floating-Point Numbers	28
1.6 Algebra of Logic. The Concept of a Proposition and Its Importance for Truth	34

APPROVED FOR RELEASE: 09/17/2001 CIA-RDP86-00513R002201620005-3"

"APPROVED FOR RELEASE: 09/17/2001 CIA-RDP86-00513R002201620005-3

USSR

KSENOFONTOV, I. S., et al., Elektronnyye Tsifrovyye Vychislitel'nyye Mashiny (Dopushcheno Ministerstvom Vysshego i Srednego Spetsial'nogo Obrazovaniya SSSR v Kachestve Uchebnogo Posobiya dlya Tekhnikumov) (Electronic Digital Computers [Authorized by the USSR Ministry of Higher and Secondary Specialized Education as a Textbook for Tekhnikums]), Moscow, "Mashinostroyeniye," 1970, pp 369-371

1.7 The Concept of a Switching or Boolean Function. Basic Boolean Functions 36
1.8 Axioms of Algebraic Logic 42
1.9 Disjunctive and Conjunctive Normal Forms of Representation of Boolean Functions 43

Chapter 2. Elements of a Digital Computer 45
2.1 Representation of Characters in Electronic Digital Computers and Classification of Elements 45
2.2 Passive Logical Elements 48
2.3 Logical Elements Made From Transistors 58
2.4 Logical Elements Made From Vacuum Tubes 63
2.5 A Magnetic Core as a Binary Cell 66
2.6 Logic Circuits Made From Core-Diode and Core-Transistor Cells 70

2/8

APPROVED FOR RELEASE: 09/17/2001 CIA-RDP86-00513R002201620005-3"

"APPROVED FOR RELEASE: 09/17/2001 CIA-RDP86-00513R002201620005-3

USSR

KSENOFONTOV, I. S., et al., Elektronnyye Tsifrovyye Vychislitel'nyye Mashiny (Dopushcheno Ministerstvom Vysshego i Srednego Spetsial'nogo Obrazovaniya SSSR v Kachestve Uchebnogo Posobiya dlya Tekhnikumov) (Electronic Digital Computers [Authorized by the USSR Ministry of Higher and Secondary Specialized Education as a Textbook for Tekhnikums]), Moscow, "Mashinostroyeniye," 1970, pp 369-371

2.7	Elements Which are Used in Number Representation in Digital Computers	83
2.8	Magnetic Parametric Elements	89
2.9	Transfluxors	91
2.10	Biaxes [biaksy]	95
2.11	Twistors	96
2.12	Thin-Film Magnetic Elements	97
2.13	Elements of Digital Computers Made From Superconductors	98
2.14	Pulse Shapers and Amplifying Elements of Digital Computers	100
2.15	Systems of Unified Logic Elements	105
Chapter 3.	Digital Computer Modules	106

3/8

APPROVED FOR RELEASE: 09/17/2001 CIA-RDP86-00513R002201620005-3"

"APPROVED FOR RELEASE: 09/17/2001 CIA-RDP86-00513R002201620005-3

USSR

KSENOFONTOV, I. S., et al., Elektronnyye Tsifrovyye Vychislitel'nyye Mashiny (Dopushcheno Ministerstvom Vysshego i Srednego Spetsial'nogo Obrazovaniya SSSR v Kachestve Uchebnogo Posobiya dlya Tekhnikumov) (Electronic Digital Computers [Authorized by the USSR Ministry of Higher and Secondary Specialized Education as a Textbook for Tekhnikums]), Moscow, "Mashinostroyeniye," 1970, pp 369-371

3.1 Registers 106
3.2 Decoders (Selective Circuits) 110
3.3 Counters 117
3.4 Accumulators 125

Chapter 4. General Principles of the Construction of Electronic Digital Computers 133
4.1 Organizational Elements of Digital Computers 133
4.2 Structure and General Operational Principle of Digital Computers 140
4.3 A System of Modular Computer Facilities 145
4.4 Classification of Digital Computers 149

Chapter 5. Arithmetic Units of Digital Computers 154

4/8

APPROVED FOR RELEASE: 09/17/2001 CIA-RDP86-00513R002201620005-3"

"APPROVED FOR RELEASE: 09/17/2001 CIA-RDP86-00513R002201620005-3

USSR

KSENOFONTOV, I. S., et al., Elektronnyye Tsifrovyye Vychislitel'nyye Mashiny (Dopushcheno Ministerstvom Vysshego i Srednego Spetsial'nogo Obrazovaniya SSSR v Kachestve Uchebnogo Posobiya dlya Tekhnikumov) (Electronic Digital Computers [Authorized by the USSR Ministry of Higher and Secondary Specialized Education as a Textbook for Tekhnikums]), Moscow, "Mashinostroyeniye," 1970, pp 369-371

5.1	Addition and Subtraction in an Arithmetic Unit	155
5.2	Multiplication in a Binary Number System	169
5.3	Division in a Binary Number System	184
5.4	Extraction of Square Roots	202
Chapter 6.	Memory Units of Digital Computers	204
6.1	Basic Concepts, Characteristics, Classification	204
6.2	Memory Units Made From Ultrasonic Delay Lines	207
6.3	Memory Units Made From Cathode-Ray Tubes	212
6.4	Memory Units Made From Ferrite Toroidal Cores With Right-Angle Hysteresis Loops	217
6.5	Memory Units Made From Magnetic Tape, Drums, Disks, and Magnetic Cards	241
6.6	Memory Units Constructed From Other Elements	264

5/8

APPROVED FOR RELEASE: 09/17/2001 CIA-RDP86-00513R002201620005-3"

"APPROVED FOR RELEASE: 09/17/2001 CIA-RDP86-00513R002201620005-3

USSR

KSENOFONTOV, I. S., et al., Elektronnyye Tsifrovyye Vychislitel'nyye Mashiny (Dopushcheno Ministerstvom Vysshego i Srednego Spetsial'nogo Obrazovaniya SSSR v Kachestve Uchebnogo Posobiya dlya Tekhnikumov) (Electronic Digital Computers [Authorized by the USSR Ministry of Higher and Secondary Specialized Education as a Textbook for Tekhnikums]), Moscow, "Mashinostroyeniye," 1970, pp 369-371

Chapter 7. Input/Output Units of Digital Computers 267
7.1 Devices for Preparing Information 268
7.2 Information-Input Devices 279
7.3 Information-Output Devices 287
7.4 Analog-Digital and Digital-Analog Converters 307
7.5 Data Transmission Systems 314

Chapter 8. Control Units 316
8.1 Purpose and General Characteristics of Control Devices of Digital Computers 316
8.2 Addressing System, Choice of Addressing System 320
8.3 Modification of Addresses 329
8.4 Central Control Devices of Digital Computers 331

6/8

APPROVED FOR RELEASE: 09/17/2001 CIA-RDP86-00513R002201620005-3"

"APPROVED FOR RELEASE: 09/17/2001 CIA-RDP86-00513R002201620005-3

USSR

KSENOFONTOV, I. S., et al., Elektronnyye Tsifrovyye Vychislitel'nyye Mashiny (Dopushcheno Ministerstvom Vysshego i Srednego Spetsial'nogo Obrazovaniya SSSR v Kachestve Uchebnogo Posobiya dlya Tekhnikumov) (Electronic Digital Computers [Authorized by the USSR Ministry of Higher and Secondary Specialized Education as a Textbook for Tekhnikums]), Moscow, "Mashinostroyeniye," 1970, pp 369-371

Chapter 9. Fundamentals of Repair and Testing of Digital Computers 343
9.1 Apparatus for Testing and Preparing Radioelectronic Elements for Work in a Computer 343
9.2 Testing and Preparation of Digital Computer Elements for Work in the Machine 346
9.3 Organization of the Task of Monitoring the Operation of a Computer 348

Chapter 10. Power Systems of Digital Computers 352
10.1 Block Diagram of the Power System of a Digital Computer 352
10.2 Circuit Elements of the Power System of a Digital Computer 354

7/8

APPROVED FOR RELEASE: 09/17/2001 CIA-RDP86-00513R002201620005-3"

"APPROVED FOR RELEASE: 09/17/2001 CIA-RDP86-00513R002201620005-3

USSR

KSENOFONTOV, I. S., et al., Elektronnyye Tsifrovyye Vychislitel'nyye Mashiny (Dopushcheno Ministerstvom Vysshego i Srednego Spetsial'nogo Obrazovaniya SSSR v Kachestve Uchebnogo Posobiya dlya Tekhnikumov) (Electronic Digital Computers [Authorized by the USSR Ministry of Higher and Secondary Specialized Education as a Textbook for Tekhnikums]), Moscow, "Mashinostroyeniye," 1970, pp 369-371

Chapter 11. Fundamentals of Microelectronics 357

Appendix. Basic Characteristics of Certain Domestic Digital Computers 364

Bibliography 368

8/8

APPROVED FOR RELEASE: 09/17/2001 CIA-RDP86-00513R002201620005-3"

"APPROVED FOR RELEASE: 09/17/2001 CIA-RDP86-00513R002201620005-3

USSR

UDC 531.787.915.087.92

KSENOFONTOV, M.YE., PAPLOVA, T.T., MIRONOV, A.I., SMYSLOV, I.I., RAPATSKAYA, I.V.

"Tensotransducers Based On Silicon-Spinel"

V sb. Pribory tochnoy mekh. i tekhnol. priborost. (Devices Of Precision Mechanics And Technology Of Instrument Construction--Collection Of Works), Moscow, 1971, pp 36-38 (from RZh:Elektronika i yeye primeneniye, No 4, Feb 72, Abstract No 28462)

Translation: Tensotransducers [tenzopreobrazovatel'] (T) based on Si-spinel were produced by build-up on spinel wafers (ground, polished, and annealed in a H_2 flow at a 1500° C temperature) of a monocrystalline layer of Si by pyrolysis of the spinel. With the aid of photolithography, tensoresistors were produced on the structure prepared, the outlets to which were produced by thermocompression. The T produced had the characteristics: resistance, 480 ohm; resistivity, 0.01 ohm.cm; temperature coefficient of resistance, 9.1 x 10^{-4} $^{o}C^{-1}$; coefficient of tenosensitivity (as a function of crystallographic orientation) 55 ÷ 95. 1 ill. 2 tab. 2 ref. V.B.

1/1

APPROVED FOR RELEASE: 09/17/2001 CIA-RDP86-00513R002201620005-3"

"APPROVED FOR RELEASE: 09/17/2001 CIA-RDP86-00513R002201620005-3

USSR

UDC 537.533.8:539.216.2

KRYN'KO, YU.N., KOVAL', I.F., MEL'NIK, P.V., NAKHODKIN, N.G., SHALDERYAN, A.I.

"Effect Of Film Structure On The Characteristics Of Secondary Electron Emission"

Vol. 17, p. 12, 1972 [sic] (from RZh:Elektronika i yeye primeneniye, No 7,July 1972, Abstract No 7A12)

Translation: The paper studies the effect of the structure of Ge and Be films, condensed at oblique and normal incidences of an atomic beam at a substrate, on the coefficient of secondary electron emission σ and the inelastic reflection η. With the aid of an electron microscope it is shown that the profile of Ge and Be films consists of needle-like crystals, the axes of which are directed to the side of the beam incidence. Such a structure effects the dependence of σ and η on the angle of incidence of the primary electron beam. The absolute values of σ and η for oblique-deposited films are smaller than for normally deposited films. The greatest difference is observed in the case when the primary electrons are incident upon the target along the direction of the needle. With an increase of the energy of the primary beam, the difference of σ and η normally and of oblique-deposited films is decreased. 4 ill. 7 ref. Author's abstract.

1/1

APPROVED FOR RELEASE: 09/17/2001 CIA-RDP86-00513R002201620005-3"

"APPROVED FOR RELEASE: 09/17/2001 CIA-RDP86-00513R002201620005-3

USSR

UDC 624.07:534.1

KSCHUK, A. I., NAKONECHNYY, P. S., KARPENKO, B. K., MATVEYEV, V. V.

"Method for the Automatic Determination of the Amplitude-Frequency Characteristics of a Mechanical System Over a Wide Spectrum of Its Natural Frequencies"

V sb. Rasseyanive energii pri kolebaniyakh mekh. sistem (Energy Scattering Under Vibrations of Mechanical Systems -- Collection of Works), Kiev, "Nauk. dumka", 1972, pp 292-296 (from RZh-Mekhanika, No 3, Mar 73, Abstract No 3V290)

Translation: A device with electronic synchronization of processes for the recording and measurement of frequency of the master oscillator is described that has many advantages as compared with mechanical synchronization. The device is designed to determine amplitude-frequency characteristics of complex mechanical systems over a wide range of natural frequencies and provides a quantitative analysis of these systems and the resonance zones when slight departures in the master oscillator and the distortion in the shape of the amplitude-frequency characteristics associated with them do not have a considerable value. A block diagram of one of the versions of the device is given. The operating principle is described. Yu. A. Belyayev.

1/1

APPROVED FOR RELEASE: 09/17/2001 CIA-RDP86-00513R002201620005-3"

"APPROVED FOR RELEASE: 09/17/2001 CIA-RDP86-00513R002201620005-3

USSR

UDC 531.727.913.087.92

KSENOFONTOV, M.YE., RAPATSKAYA, I.V.

"Tensotransducer Based On Silicon-Sapphire-Molybdenum"

V sb. Pribory tochnoy mekh. i tekhnol. priborostr. (Devices Of Precision Mechanics And Technology Of Instrument Construction), Moscow, 1971, pp 35-40 (from RZh:Elektronika i yeye primeneniye, No 3, Feb 72, Abstract No 3B281)

Translation: Tensotransducers [tenzopreobrazovatel'] (T) based on Si--sapphire--Mo were produced by growing from a melt on wafers of polycrystalline Mo, of a dielectric layer of sapphire up to 7 micrometer thick, on which by pyrolysis of silane a film was grown of n-type Si with a resistivity of 0.5 ohm.cm and a thickness of 10 micrometer. Tensoresistors were produced on the structure obtained by the lithographic method, the outlets to which were produced by thermocompression of Au 30 micrometer in diameter with subsequent soldering of Cu wires. The T obtained had the characteristics: resistance, 5800 ohm; coefficient of tensosensitivity, 10 ÷ 70; temperature coefficient of resistance 0.8×10^{-4} $^{\circ}C^{-1}$; temperature coefficient of tensosensitivity, 1.9×10^{-3} $^{\circ}C^{-1}$. In comparison with T based on Si-sapphire and Si-spinel the T described is able to emit greater power. In view of the closeness of the expansion coefficient of sapphire and Mo, the substrate of the T is practically free from mechanical stress. 1 ill. 1 ref. V.S.

1/1

APPROVED FOR RELEASE: 09/17/2001 CIA-RDP86-00513R002201620005-3"

"APPROVED FOR RELEASE: 09/17/2001 CIA-RDP86-00513R002201620005-3

1/2 031 UNCLASSIFIED PROCESSING DATE--23OCT70

TITLE--COLD RESISTANCE OF CASTINGS FROM STEEL 35GL -U-

AUTHOR--KSENOFONTOV, V.P.

COUNTRY OF INFO--USSR

SOURCE--METALLOVED. TERM. OBRAB. METAL. 1970, (3), 45-6

DATE PUBLISHED--------70

SUBJECT AREAS--MECH., IND., CIVIL AND MARINE ENGR, MATERIALS

TOPIC TAGS--LOW TEMPERATURE ALLOY, LOW TEMPERATURE METAL, CAST STEEL, NONMETALLIC INCLUSION, GRAIN BOUNDARY, MATERIAL FRACTURE, BRITTLE FRACTURE, ALLOY DESIGNATION, MATERIAL CRUSHING, CRUSHER/(U)35GL MANGANESE CAST STEEL

CONTROL MARKING--NO RESTRICTIONS

DOCUMENT CLASS--UNCLASSIFIED

PROXY REEL/FRAME--1996/1703 STEP NO--UR/0129/70/000/003/0045/0046

CIRC ACCESSION NO--AP0118681

UNCLASSIFIED

APPROVED FOR RELEASE: 09/17/2001 CIA-RDP86-00513R002201620005-3"

"APPROVED FOR RELEASE: 09/17/2001 CIA-RDP86-00513R002201620005-3

2/2 031 UNCLASSIFIED PROCESSING DATE--23OCT70

CIRC ACCESSION NO--AP0118681

ABSTRACT/EXTRACT--(U) GP-0- ABSTRACT. CASTINGS FROM STEEL 35L (JAWS OF CRUSHERS WEIGHING 2.5-3.5 TONS WITH WALL THICKNESS 50-70 MM) WERE MELTED IN ELEC. FURNACES WITH BASIC AND ALSO ACID LININGS. ALL CASTINGS WERE PUT INTO A FURNACE AT 500DEGREES, HEATED TO 650 DEGREES AT 100DEGREES-HR, HELD FOR 2 HR, HEATED TO 880-900DEGREES, HELD 3 HR, COOLED IN AIR FOR 45 MIN, HEATED TO 650DEGREES, HELD 2 HR, AND COOLED IN AIR. CASTINGS WHICH FAILED WERE CLASSIFIED INTO GROUPS IN ORDER TO DET. CAUSES OF FRACTURE. THE FRACTURE WAS MORE FREQUENT WITH CASTING CONTG. HIGHER AMTS. OF P (0.056-0.065PERCENT), S, OR NONMETALLIC INCLUSIONS (PARTICULARLY IF THEY ARE DISTRIBUTED ALONG GRAIN BOUNDARIES). COARSE GRAINS CONTRIBUTED TO FRACTURE FORMATION. GLOBULAR NONMETALLIC INCLUSIONS WERE MORE FAVORABLE THAN LAMELLAR ONES. IT IS RECOMMENDED TO CARRY OUT THE MELTING IN BASIC FURNACES, AND TO HEAT TREAT AND MODIFY THE STEEL IN ORDER TO OBTAIN FINER GRAIN AND GLOBULAR NONMETALLIC INCLUSIONS.

UNCLASSIFIED

APPROVED FOR RELEASE: 09/17/2001 CIA-RDP86-00513R002201620005-3"

"APPROVED FOR RELEASE: 09/17/2001 CIA-RDP86-00513R002201620005-3

USSR UDC 621.396.69(088.8)

VALITOV, M. S., VOLKOV, B. A., FEDYUNIN, V. N., DEART, A. F., KSENOFONTOV, Ye. A.,
Moscow Mining Institute

"A Device for Physical Modeling of Radio Electronic Circuits"

USSR Author's Certificate No 255665, Filed 13 Mar 67, Published 12 Mar 70 (from RZh-Radiotekhnika, No 10, Oct 70, Abstract No 10V402 P)

Translation: The proposed device is based on the use of a random number pickup whose output is connected to the movable contact of a step switch in the simulation set-up module. This step switch is connected to the control windings of actuating relays, indicator lamps and pulse counters. N. S.

1/1

APPROVED FOR RELEASE: 09/17/2001 CIA-RDP86-00513R002201620005-3"

"APPROVED FOR RELEASE: 09/17/2001 CIA-RDP86-00513R002201620005-3

USSR

UDC: 8.74

KRASILOV, A. A., KSENOFONTOV, Yu. I., LEVTES, V. L.

"Realization of an ALGOL-60 Type Language on the M-220 Computer"

Zh. vychisl. mat. i mat. fiz. (Journal of Computer Mathematics and Mathematical Physics), 1971, 11, No 4, pp 1075-1078 (From RZh-Kibernetika, No 1, Jan 72, Abstract No 1V1012)

Translation: The paper is a report on a high-speed translating system (up to 1 200 commands/min) for the M-220 computer to convert ALGOL programs to machine codes. In addition to constructions in ALGOL-60, the input language includes operations on data blocks, with complex numbers and logic sequences of bits the length of a machine word. The characteristics of the translator give the system excellent operational and service properties. Authors' abstract.

1/1

APPROVED FOR RELEASE: 09/17/2001 CIA-RDP86-00513R002201620005-3"

"APPROVED FOR RELEASE: 09/17/2001 CIA-RDP86-00513R002201620005-3

1/2 029 UNCLASSIFIED PROCESSING DATE--13NOV70

TITLE--CENTRAL NEUROTROPIC ACTIVITY OF AMINOPROPYL AND AMINOPROPIONYL DERIVATIVES OF IMINOBIBENZYL AND DIPHENYLAMINE AND ITS RELATION TO THE

AUTHOR-(04)-LAPIN, I.P., KSENOFONTOVA, T.A., KVITKO, I.YA., PORAYKOSHITS, B.A.

COUNTRY OF INFO--USSR

SOURCE--FARMAKOLOGIYA I TOKSIKOLOGIYA, 1970, VOL 33, NR 1, PP 8-13

DATE PUBLISHED--------70

SUBJECT AREAS--BIOLOGICAL AND MEDICAL SCIENCES

TOPIC TAGS--NERVOUS SYSTEM DRUG, MOUSE, RESERPINE, CHOLINOLYTIC, TOXICITY, IONIZATION

CONTROL MARKING--NO RESTRICTIONS

DOCUMENT CLASS--UNCLASSIFIED

PROXY REEL/FRAME--3004/1368 STEP NO--UR/0390/70/033/001/0008/0013

CIRC ACCESSION NO--AP0131791

APPROVED FOR RELEASE: 09/17/2001 CIA-RDP86-00513R002201620005-3"

"APPROVED FOR RELEASE: 09/17/2001 CIA-RDP86-00513R002201620005-3

2/2 029 UNCLASSIFIED PROCESSING DATE--13NOV70

CIRC ACCESSION NO--AP0131791

ABSTRACT/EXTRACT--(U) GP-0- ABSTRACT. EXPERIMENTS WITH MICE SHOWED THAT THE DECREASE IN THE BASICITY OF THE AMINO GROUP IN THE SIDE CHAIN OF THE COMPOUNDS GIVEN IN THE TABLE BELOW IS ACCOMPANIED BY REDUCTION, OR EVEN DISAPPEARANCE OF THE ANTIRESERPINE, ADRENO POSITIVE, AND CHOLINOLYTIC ACTIVITY. IT IS ASSUMED THAT SUCH ACTIVITY REQUIRES THAT THE PKA OF THE AMINO GROUP BE KEPT ABOVE 8.3. NO CORRELATION WAS SHOWN BETWEEN THE TOXICITY OF THE COMPOUNDS INVESTIGATED AND THEIR PKA VALUES.

UNCLASSIFIED

APPROVED FOR RELEASE: 09/17/2001 CIA-RDP86-00513R002201620005-3"

"APPROVED FOR RELEASE: 09/17/2001 CIA-RDP86-00513R002201620005-3

1/2 015 UNCLASSIFIED PROCESSING DATE--16OCT70

TITLE--DETERMINATION OF BETA SITOSTEROL IN VEGETABLE RAW MATERIAL -U-

AUTHOR-(05)-KSENOFONTOVA, YE.V., MUKHINA, M.V., KHALETSKIY, A.M., KAGANOVICH, F.L., BELKEVICH, P.I.

COUNTRY OF INFO--USSR

SOURCE--VESTSI AKAD. NAVUK BELARUS. SSSR, SER. KHIM. NAVUK 1970, (1), 103-5

DATE PUBLISHED--------70

SUBJECT AREAS--BIOLOGICAL AND MEDICAL SCIENCES

TOPIC TAGS--STEROL, PROCESSED PLANT PRODUCT, SOLVENT EXTRACTION, CHEMICAL PURIFICATION, SPECTROPHOTOMETRY

CONTROL MARKING--NO RESTRICTIONS

DOCUMENT CLASS--UNCLASSIFIED

PROXY REEL/FRAME--1997/0190 STEP NO--UR/0419/70/000/001/0103/0105

CIRC ACCESSION NO--AP0119186

UNCLASSIFIED

APPROVED FOR RELEASE: 09/17/2001 CIA-RDP86-00513R002201620005-3"

"APPROVED FOR RELEASE: 09/17/2001 CIA-RDP86-00513R002201620005-3

2/2 015 UNCLASSIFIED PROCESSING DATE--16OCT70

CIRC ACCESSION NO--AP0119186

ABSTRACT/EXTRACT--(U) GP-0- ABSTRACT. DISSOLVE PHYTOSTEROL (0.03 G) IN CH SUB2 CL SUB2 AND APPLY ON THE STARTING LINE OF A LAYER OF UNBOUND AL SUB2 O SUB3. DEVELOP WITH ETO SUB2 AND LOCATE THE BETA SITOSTEROL IN UV LIGHT. ELUTE IT FROM THE POWDER WITH HOT ME SUB2 CO. EVAPORATE ME SUB2 CO AND DISSOLVE RESIDUE IN 25 ML ACOH. TO 5 ML ADD 2 ML 0.5PERCENT BENZOYL PEROXIDE AND BOIL 3-5 MIN. AFTER COOLING, CAREFULLY ADD 0.5 ML CONCD. H SUB2 SO SUB4 AND DIL. TO 25 ML WITH ACOH. MEASURE ABSORBANCE AT 690 MMU OR WITH A RED FILTER. THE LINEAR RANGE IS 0-280 MUG PER ML. THE METHOD IS USED TO ANALYZE UNSAPONIFIABLE ROSINS FROM PEAT WAXES.

FACILITY: LENINGRAD. KHIM.-FARM. INST., LENINGRAD, USSR.

UNCLASSIFIED

APPROVED FOR RELEASE: 09/17/2001 CIA-RDP86-00513R002201620005-3"

"APPROVED FOR RELEASE: 09/17/2001 CIA-RDP86-00513R002201620005-3

USSR

UDC: 547.466:591.85:636.7

PEGEL', V. A., KSENTS, S. M. and HESSUMENOVA, S. S., Chair of Human and Animal Physiology, Tomsk State University imeni V. V. Kuybyshev

"Blood Amino Acid Level in Dogs After Static and Dynamic Loads"

Moscow, Nauchnyye Doklady Vysshey Shkoly, Biologicheskiye Nauki, No 1, 1971, pp 38-43

Abstract: The equilibrium between proteinsynthesis and proteolysis in the muscles is disturbed by muscular work, and the amino acid content of the blood is affected as a result. Experiments with dogs showed that, after a static load (a package of sand whose weight totaled 60% of the body weight placed on the animals' back), most amino acids in the arterial blood tended to decrease in comparison to those in the inferior vena cava, where cystine, lysine, histidine, aspartic acid, etc. increased. After a dynamic load (running on a treadmill), on the other hand, such amino acids as threonine, aspartic acid, lysine, glutamine, and tyrosine increased, while histidine, serine, glutamic acid, and methionine decreased. The role of the liver in maintaining the amino acid level of the blood during muscular exertion is discussed.

1/1

APPROVED FOR RELEASE: 09/17/2001 CIA-RDP86-00513R002201620005-3"

"APPROVED FOR RELEASE: 09/17/2001 CIA-RDP86-00513R002201620005-3

Adsorption

USSR UDC 66.074.396.22

SHRAMBAN, B. I., KSENZENKO, V. I., ZAKGEYM, A. YU., Moscow Institute of Fine Chemical Technology imeni. M. V. Lomonosov

"Sorption of Hydrogen Fluoride by AB-17 x 8 Anion-Exchange Resin from the Gas Phase"

Ivanovo, Izvestiya vysshikh uchebnykh zavedeniy, khimiya i khimicheskaya tekhnologiya, Vol XV, No 7, 1972, pp 1112-1114.

Abstract: A study was made of the sorption of HF by AB-17 x 8 anion-exchange resin from wet gases under laboratory conditions to obtain a mathematical description of the process. The Hartley plan with a nucleus quarter-replica type 2^{6-2} was used. The experiments were performed under dynamic conditions with the following independent variables: x_1 -- $\log C_{HF}$ where C_{HF} is the initial HF concentration in the gas, mg/ℓ ; x_2 -- experimental temperature, °C; x_3 -- moisture of the gas, %; x_4 -- gas velocity, m/sec; x_5 -- log d where d is the grain diameter of the ion-exchange resin in the tested fraction, mm; x_6 -- height of the ion-exchange resin layer, mm. The coding conditions and experimental matrix are presented in table form. The regression coefficients were calculated on a computer and the Student criterion was used to eliminate some of them. The regression equation obtained agrees with the

1/2

APPROVED FOR RELEASE: 09/17/2001 CIA-RDP86-00513R002201620005-3"

"APPROVED FOR RELEASE: 09/17/2001 CIA-RDP86-00513R002201620005-3

USSR

SHRAMBAN, B. I., et al., Izvestiya vysshikh uchebnykh zavedeniy, Khimiya i khimicheskaya tekhnologiya, Vol XV, No 7, 1972, pp 1112-1114

theoretical effect of the wetness of the gas and the grain size of the resin on sorption. The absorption mechanism is explained according to the following formulas:

$$HF+ROH \rightleftharpoons RF+H_2O,\quad RF+HF \rightleftharpoons RHF_2,\quad RHF_2+nHF \rightleftharpoons RHF_2\cdot(HF)_n,$$

where n is the index indicating the number of moles of HF not sorbed by the ion-exchange mechanism.

2/2

APPROVED FOR RELEASE: 09/17/2001 CIA-RDP86-00513R002201620005-3"

"APPROVED FOR RELEASE: 09/17/2001 CIA-RDP86-00513R002201620005-3

USSR UDC 621.35.035.2

KOSHEL', N. D., KSENZHEK, O. S.

"Possibility of Using Electrodes with Regular Structural Porosity"

Khim. Tekhnologiya Resp. Mezhved. Temat. Nauch-Tekhn Sb. [Chemical Technology, Republic Interdepartmental Thematic Scientific and Technical Collection], 1971, Vol 23, pp 125-130. (Translated from Referativnyy Zhurnal Khimiya, No 4, Moscow, 1972, Abstract No 4L227 from the resume).

Translation: Various models of porous structures of cellular, fibrous and granular types are studied. For each model, the dependence of the internal surface, effective conductivity and productivity on porosity are determined. It is demonstrated that the use of regular structures with unbranched pores can increase the dimensional productivity of electrodes by 50-80% (by improving transfer conditions) and decrease the weight of electrodes by 1 or 2 orders of magnitude. The use of regular structures with evenly distributed electrolyte area on the internal surface with the electrode operating in the diffusion mode can increase productivity by 20-50%.

1/1

APPROVED FOR RELEASE: 09/17/2001 CIA-RDP86-00513R002201620005-3"

"APPROVED FOR RELEASE: 09/17/2001 CIA-RDP86-00513R002201620005-3

1/2 014 UNCLASSIFIED PROCESSING DATE--02OCT70

TITLE--MEASUREMENT OF THE HYDROXYL TRANSFER NUMBER IN HIGHLY CONCENTRATED MIXED SOLUTIONS OF ALKALI AND SODIUM CHLORIDE -U-

AUTHOR-(02)-SEREBRITSKIY, V.M., KSENZHEK, O.S.

COUNTRY OF INFO--USSR

SOURCE--ZH. PRIKL. KHIM. (LENINGRAD) 1970, 43(1), 75-8

DATE PUBLISHED--------70

SUBJECT AREAS--CHEMISTRY

TOPIC TAGS--ELECTROLYTIC CELL, ION DENSITY, HYDROXIDE, PARTICLE DIFFUSION, SODIUM CHLORIDE, ELECTRODE PROPERTY

CONTROL MARKINGS--NO RESTRICTIONS

DOCUMENT CLASS--UNCLASSIFIED

PROXY REEL/FRAME--1987/0853 STEP NO--UR/0080/70/043/001/0075/0078

CIRC ACCESSION NO--AP0104289

UNCLASSIFIED

APPROVED FOR RELEASE: 09/17/2001 CIA-RDP86-00513R002201620005-3"

"APPROVED FOR RELEASE: 09/17/2001 CIA-RDP86-00513R002201620005-3

2/2 014 UNCLASSIFIED PROCESSING DATE--02OCT70

CIRC ACCESSION NO--AP0104239

ABSTRACT/EXTRACT--(U) GP-0- ABSTRACT. THE APPARENT TRANSPORT NO. T (WITHOUT CORRECTING FOR THE HYDRATION OF IONS) OF OH PRIME NEGATIVE IONS IN NAOH PLUS NACL MIXTS. WAS OBTAINED AT 25DEGREES BY USING THE MOVING BOUNDARY METHOD WITH AN ACCURACY OF PLUS OR MINUS 2.5PERCENT. ELECTROLYTIC PROBES WERE USED FOR OBSERVING THE BOUNDARY MOVEMENT. THE CELL WAS PROVIDED WITH CLOSED ELECTRODE SPACE IN WHICH A CD ANODE WAS USED. T WAS CALCD. FROM THE OBSD. VALUES T PRIME1 BY APPLYING VOL. CORRECTIONS: T EQUALS T PRIME1 PLUS OR MINUS C DELTA V, WHERE C IS THE CONCN. AND V EQUALS ONE HALF BAR V CD(OH) SUB2 MINUS ONE HALF BAR V CD MINUS (1 MINUS T SUBOH NEGATIVE) BAR V SUBNAOH PLUS T SUBCL NEGATIVE BAR V SUBNACL (BAR V IS PARTIAL MOLAR VOL.). ELECTRODE PROCESSES AND MIGRATION OF COMPDS. LEADING TO ADDNL. BOUNDARY MOVEMENT NECESSITATES THE CORRECTION. THE FOLLOWING VALUES WERE OBTAINED (N NAOH, N NACL, AND T, RESP.): 1.1, 4.5, 0.275, 1.7, 4.0; 0.40, 2.4, 3.6, 0.505, 3.0, 3.0, 0.59; 3.7, 2.5, 0.67; 4.4, 1.9, 0.74; 5.2, 1.3 0.80; 6.0, 0.6, 0.85; AND 6.8, 0, 0.90.

APPROVED FOR RELEASE: 09/17/2001 CIA-RDP86-00513R002201620005-3"

"APPROVED FOR RELEASE: 09/17/2001 CIA-RDP86-00513R002201620005-3

1/2 018 UNCLASSIFIED PROCESSING DATE--19SEP70

TITLE--PRODUCTION OF CONSIDERABLE AMOUNT OF RIBOFLAVIN BY SOME YEAST STRAINS OF THE DEBARYOMYCES GENUS -U-

AUTHOR-(03)-SHAVLOVSKIY, G.M., KSHEMINSKAYA, G.P., VARIVODA, M.I.

COUNTRY OF INFO--USSR

SOURCE--MIKROBIOLOGIYA, 1970, VOL 39, NR 2, PP 327-330

DATE PUBLISHED--------70

SUBJECT AREAS--BIOLOGICAL AND MEDICAL SCIENCES

TOPIC TAGS--RIBOFLAVIN, YEAST, ASPARAGINE, IRON, CULTURE MEDIUM

CONTROL MARKING--NO RESTRICTIONS

DOCUMENT CLASS--UNCLASSIFIED

PROXY REEL/FRAME--1983/1407 STEP NO--UR/0220/70/039/002/0327/0330

CIRC ACCESSION NO--AP0054270

UNCLASSIFIED

APPROVED FOR RELEASE: 09/17/2001 CIA-RDP86-00513R002201620005-3"

"APPROVED FOR RELEASE: 09/17/2001 CIA-RDP86-00513R002201620005-3

2/2 018 UNCLASSIFIED PROCESSING DATE--18SEP70

CIRC ACCESSION NO--AP0054270

ABSTRACT/EXTRACT--(U) GP-0- ABSTRACT. ALL 5 STUDIED STRAINS OF DEBARYOMYCES KLOCKERI AND ONE STRAIN OF D. GUILLIERMONDI REQUIRED BIOTIN. YEAST AUTOLYSATE AND ASPARAGINE STIMULATED GROWTH OF THESE STRAINS. THREE STRAINS OF D. KLOCKERI (U-102, U-104, AND U-105) AND ONE STRAIN OF D. GUILLIERMONDII (U-106), WHEN GROWN ON IRON DEFICIENT MEDIA, ACCUMULATED CONSIDERABLE AMOUNT OF RIBOFLAVIN (20 TO 60 MUG-ML) IN THE CULTURAL BROTH. THE PRESENCE OF IRON IN THE MEDIUM AT A CONCENTRATION OF 0.1 TO 0.2 MUG-ML INHIBITED RIBOFLAVIN SYNTHESIS BY THE CULTURES. FREE RIBOFLAVIN AND FMN WERE FOUND IN THE CULTURAL BROTH OF D. KLOCKERI U-102 AND D. GUILLIERMONDII U-106. THE CONCENTRATION OF FMN WAS 3.5 TO 3.6PERCENT OF THE TOTAL CONTENT OF FLAVINES ACCUMULATED BY THE CELLS IN THE MEDIUM.

UNCLASSIFIED

APPROVED FOR RELEASE: 09/17/2001 CIA-RDP86-00513R002201620005-3"

"APPROVED FOR RELEASE: 09/17/2001 CIA-RDP86-00513R002201620005-3

1/2 009 UNCLASSIFIED PROCESSING DATE--16OCT70

TITLE--STUDIES ON CARBOHYDRATE COMPOSITION OF RUBOMYCIN B -U-

AUTHOR-(04)-FEDOKOVA, G.B., BRAZHNIKOVA, M.G., MEZENTSEV, A.S., KSHEPINSKIY, I.

COUNTRY OF INFO--USSR

SOURCE--ANTIBIOTIKI, 1970, VOL 15, NR 5, PP 403-406

DATE PUBLISHED--------70

SUBJECT AREAS--BIOLOGICAL AND MEDICAL SCIENCES

TOPIC TAGS--CARBOHYDRATE, ANTIBIOTIC/(U)RUBOMYCIN C ANTIBIOTIC, (U)RUBOMYCIN B ANTIBIOTIC

CONTROL MARKING--NO RESTRICTIONS

DOCUMENT CLASS--UNCLASSIFIED

PROXY REEL/FRAME--1994/0153 STEP NO--UR/0297/70/015/005/0403/0406

CIRC ACCESSION NO--AP0114549

UNCLASSIFIED

APPROVED FOR RELEASE: 09/17/2001 CIA-RDP86-00513R002201620005-3"

"APPROVED FOR RELEASE: 09/17/2001 CIA-RDP86-00513R002201620005-3

2/2 009 UNCLASSIFIED PROCESSING DATE--16OCT70

CIRC ACCESSION NO--AP0114549

ABSTRACT/EXTRACT--(U) GP-0- ABSTRACT. TRIDESOXYSUGAR (C SUB6 H SUB12 O SUB3), A CARBOHYDRATE FRAGMENT, POSSIBLY IDENTICAL WITH RODINOSE, RESPONSIBLE FOR THE DIFFERENCE BETWEEN RUBOMYCINS B AND C, WAS ISOLATED FROM RUBOMYCIN B (A COMPONENT OF RUBOMYCIN COMPLEX). FACILITY: INSTITUTE FOR NEW ANTIBIOTICS OF ACADEMY OF MEDICAL SCIENCES OF THE USSR, MOSCOW. FACILITY: INSTITUTE FOR ORGANIC CHEMISTRY AND BIOCHEMISTRY OF ACADEMY OF SCIENCES OF CHECHOSLOVAKIA.

UNCLASSIFIED

APPROVED FOR RELEASE: 09/17/2001 CIA-RDP86-00513R002201620005-3"

"APPROVED FOR RELEASE: 09/17/2001 CIA-RDP86-00513R002201620005-3

USSR

UDC: 616.988.75(A2)-036.22(474.5)

RATMANAYTE, L. M., STEBLIVSKIY, P. P., LAZAREV, O. P., ZABOLOTNOV, V. I., and KSHIVITSKAS, V. S., Vil'nius, Institute of Epidemiology, Microbiology, and Hygiene

"Characteristics of Immunological Shifts Among the Population of the Lithuanian SSR due to the Hong Kong Influenza Epidemic"

Moscow, Zhurnal Mikrobiologii, Epidemiologii, i Immunobiologii, Vol 48, No 6, Jun 71, pp 104-106

Abstract: The correlation between the intensity of influenza and the level of antihemagglutinins in the blood serum was studied. The 1969 epidemic, caused by influenza virus A2 Hong Kong 1/68, began in the second week of January and continued for 2 months. It was severe and distinguished by a large number of respiratory complications, surpassing in mass morbidity all of the influenza epidemics during the preceding decade. Serological investigation of 143 sera from members of organized collectives and 110 sera from the rest of the population, collected during November 1969, established the presence of antihemagglutinins only in a small number of sera with mean geometric titers of 1:14.8 and 1:9.2, respectively. During the epidemic the appearance of antihemagglutinins was accompanied by an increase of antibodies to virus A2-Hong

1/2

APPROVED FOR RELEASE: 09/17/2001 CIA-RDP86-00513R002201620005-3"

"APPROVED FOR RELEASE: 09/17/2001 CIA-RDP86-00513R002201620005-3

USSR

RATNANAYTE, L. M., et al, Zhurnal Mikrobiologii, Epidemiologii, i Immunobiologii, Vol 48, No 6, Jun 71, pp 104-106

This may be expalined as an anamnesticic response of the organism to a new virus variant. Serological investigations of sera obtained during the month of October-November, that is 8-9 months after the epidemic, established a low level of antihemagglutinins to virus A2 Hong Kong 1/68, with only 31.6% of the sera containing antibodies in a titer of 1:40 and higher. Higher titers of antibodies to virus A2 151/65 and V Dushanbe-66 were established in the sera. In all of the groups of sera studied, in the postepidemic period antihemagglutinins to the new antigenic variant of the virus were observed less often and also in titers lower than those to the preceding A2 virus variant.

2/2

APPROVED FOR RELEASE: 09/17/2001 CIA-RDP86-00513R002201620005-3"

"APPROVED FOR RELEASE: 09/17/2001 CIA-RDP86-00513R002201620005-3

USSR UDC 629.7.036.3:536.46:531.7

IVLIYEV, A. V., KSHNYAKIN, N. A., LUKACHEV, V. P., and UGLOV, B. A.

"Measurement of the Normal Combustion Rate by Means of an Automatic Electronic Device"

Tr. Kuybyshev. Aviats. In-t, No 56, 1973, pp 17-23 (from Referativnyy Zhurnal--Aviatsionnyye i Raketnyye Dvigateli, No 10, 1973, Abstract No 10.34.26. Resume)

Translation: On the basis of a procedure developed by the authors for determining the surface area of the front of a flame propagating in a horizontal tube open at the end at which the combustible mixture is ignited, an automatic electronic device is proposed which permits measurement of the apparent rate of movement of the flame in relation to the length of the tube wall, as well as the length of projection of the flame front along the tube axis, and makes it possible, by means of a stipulated procedure, to calculate the normal rate of combustion. An estimate of the measurement error was conducted, which showed that the proposed device decreases the measurement errors by two orders of magnitude in comparison to the method of slow-motion photography. With the use of this method, the labor intensity of determination of the normal rate of flame propagation is considerably decreased. 4 figures. 10 references.

1/1

APPROVED FOR RELEASE: 09/17/2001 CIA-RDP86-00513R002201620005-3"

"APPROVED FOR RELEASE: 09/17/2001 CIA-RDP86-00513R002201620005-3

KSHONDZER, E. G.

SCIENTIFIC PRINCIPLES AND PROCEDURE OF ENGINEERING CALCULATION OF HYDRAULIC AND PNEUMATIC TRANSPORT

(Conference in Kaliningrad)

[Article by Candidate of Technical Sciences E. G. Kshondzer; Moscow, Vestnik Akademii Nauk SSSR, Russian, Vol 41, No 10, October 1971, pp 76-78]

In the planning of pipeline systems transporting various solid materials in a stream of liquid or gas, considerable difficulties arise in the selection of optimal conditions of transportation and in determining the pressure drop along the length of the pipeline. There are several directions in the procedure of engineering calculation of such pipelines, but since all the methods are based on different, not always sufficiently substantiated physical models of the motion of suspended flow, the calculating data obtained on the basis of available formulas differ substantially from one another. The picture of the economic effectiveness of movement of friable materials along pipelines often proves to be distorted, and its objective comparison with other types of transport is made difficult.

To discuss the main approaches to the physics of the processes taking place in the hydraulic and pneumatic transport of friable materials and containers, analyze the scientific directivity of the work of various organizations in that area and make [illegible] the more correct path of further investigations, the Permanent Commission for Scientific Problems in the Development of Transport of the AS USSR convoked on 18-21 May in Kaliningrad a conference on "Physical principles and procedure of engineering calculation of pipeline hydraulic and pneumatic transport." It was held jointly with the Technical Committee for Polyphase Liquids of the Soviet National Commission of the International Association of Hydraulic Research and the Kaliningrad Technical Institute. Participating in the work of the conference were [illegible] representing various departments and organizations of our country.

- 1[illegible] -

[illegible]

APPROVED FOR RELEASE: 09/17/2001 CIA-RDP86-00513R002201620005-3"

"APPROVED FOR RELEASE: 09/17/2001 CIA-RDP86-00513R002201620005-3

USSR UDC: 621.396.96.004

LATINSKIY, S. M., SHARAFOV, V. I., KSYONZ, S. P., AFANAS'YEV, S. S.

"Theory and Practice in Radar Systems Operation"

Teoriya i praktika ekspluatatsii radiolokatsionnykh sistem (cf. English above), Moscow, "Sov. radio", 1970, 432 pp, ill. 1 r. 20 k. (from RZh--Radiotekhnika, No 12, Dec 70, Abstract No 12G62)

Translation: Light is thrown on some problems in the theory and practice of radar systems operation. Methods of maintaining the parameters of radar systems are considered: effective range, precision in determining the coordinates of the target, reliability on the given level. Considerable attention is given to the problem of maintaining reliability in the face of failures. Some phases of technical diagnosis are outlined and examples are given of setting up programs for troubleshooting and for monitoring radar systems for operability. Principles and methods are described for effective adjustment and regulation of radar equipment. Considerable space is devoted to the use of quantitative methods in solving problems of utilization. The book is written for engineers involved in the design, production and use of radar equipment as well as for students of advanced courses in radio engineering schools. 245 illustrations, 10 tables, bibliography of 69 titles. Annotation.

1/1

APPROVED FOR RELEASE: 09/17/2001 CIA-RDP86-00513R002201620005-3"

"APPROVED FOR RELEASE: 09/17/2001 CIA-RDP86-00513R002201620005-3

USSR UDC: 629.7.036:536.46

KTALKHERMAN, M. G.

"Heat Exchange in a Flat Channel with Sudden Expansion upon Combustion of a Homogeneous Hydrogen-Air Mixture"

Aerofiz. Issledovaniya [Aerophysical Research -- Collection of Works], Novosibirsk, 1972, p 86 (Translated from Referativnyy Zhurnal Aviatsionnyye i Raketnyye Dvigateli, No 5, 1973, Abstract No 5.34.92, from the Resume).

Translation: An experimental study is performed of local heat exchange in a channel with sudden expansion upon combustion of a homogeneous mixture. The working section is a channel measuring 50 x 40 x 700 mm, the height of the steps is 19 mm. The experiments are performed in the range of Reynolds numbers Re = $(3.1\text{-}5.5)\cdot 10^4$. The hydrogen-air mixture is burned in the channel with an excess air factor α = 2-2.5. Heat fluxes are measured by a nonstationary method. The distribution of local heat transfer factors, as the experiments show, is typical for separation flows. The peak of the curves corresponds to the area of attachment, the left branch -- to the area of reverse flow, the right branch -- to the section of adjustment of flow and the transition to stabilized flow. The length of the separation area (5-5.5 times the height of the step) is determined according to the length of a short separation

1/2

APPROVED FOR RELEASE: 09/17/2001 CIA-RDP86-00513R002201620005-3"

"APPROVED FOR RELEASE: 09/17/2001 CIA-RDP86-00513R002201620005-3

USSR

Ktalkherman, M. G., Aerofiz. Issledovaniya, Novosibirsk, 1972, p 86.

zone in an isothermal stream. Comparison of the data produced on heat exchange with similar results measured with quasi-isothermal flow shows that in the case with combustion the intensity of heat transfer is less.

2/2

APPROVED FOR RELEASE: 09/17/2001 CIA-RDP86-00513R002201620005-3"

"APPROVED FOR RELEASE: 09/17/2001 CIA-RDP86-00513R002201620005-3

AA0044818

K

UR 0482

Soviet Inventions Illustrated, Section II Electrical, Derwent,

2/70

243891 ANALYSIS OF ELECTRONIC CIRCUITS of a low frequency under the influence of climatic conditions, by means of temperature sensitive units, is carried out by having each temperature sensitive unit replaced by three sensitive units, each of which is placed in normal temperature, hot or cold chambers maintained at fixed temperatures and the behaviour of the system in relation to temperature influence is evaluated by connecting one after another of the tested circuits to the switchgear of the corresponding chambers.
22.6.65 as No.421. ~~V.M.KTITAREV~~. IZHEV MOTOR WORKS. (1.10.69.) Bul 17/14.5.69. Class 421. Int.Cl.G Olk.

Izhevskiy Motozavod

4

1/1

19771668

APPROVED FOR RELEASE: 09/17/2001 CIA-RDP86-00513R002201620005-3"

"APPROVED FOR RELEASE: 09/17/2001 CIA-RDP86-00513R002201620005-3

1/2 029 UNCLASSIFIED PROCESSING DATE--27NOV70

TITLE--THE MICROWAVE IMPEDANCE OF A METAL WIRE DURING THE HIGH CURRENT PULSE -U-

AUTHOR-(02)-VENDIK, O.G., KTITOROV, S.A.

COUNTRY OF INFO--USSR

SOURCE--J. PHYS. C. PROC. PHYS. SOC. (SOLID STATE PHYS.) (GB), SER., VOL. 3, NO. 3, P. 671-4 (MARCH 1970)

DATE PUBLISHED--------70

SUBJECT AREAS--ELECTRONICS AND ELECTRICAL ENGR., PHYSICS

TOPIC TAGS--ELECTRIC IMPEDANCE, MICROWAVE TECHNOLOGY, TEMPERATURE DISTRIBUTION

CONTROL MARKING--NO RESTRICTIONS

DOCUMENT CLASS--UNCLASSIFIED

PROXY REEL/FRAME--3007/0497 STEP NO--UR/0000/70/003/003/0671/0674

CIRC ACCESSION NO--AP0135960

UNCLASSIFIED

APPROVED FOR RELEASE: 09/17/2001 CIA-RDP86-00513R002201620005-3"

"APPROVED FOR RELEASE: 09/17/2001 CIA-RDP86-00513R002201620005-3

2/2 029 UNCLASSIFIED PROCESSING DATE--27NOV70

CIRC ACCESSION NO--AP0135960

ABSTRACT/EXTRACT--(U) GP-0- ABSTRACT. THE INFLUENCE OF THE HIGH PULSE CURRENT ON THE TEMPERATURE DISTRIBUTION OF A THIN METAL WIRE IS CONSIDERED UNDER THE CONDITION THAT THE CROSS SECTIONAL AREA OF THE WIRE HAS RANDOM VALUES. THE CHANGE OF THE WIRE IMPEDANCE DURING THE CURRENT PULSE MAKES IT POSSIBLE TO EXPLAIN THE ANOMALOUS BEHAVIOUR OF THE MICROWAVE IMPEDANCE, WHICH HAS BEEN OBTAINED PREVIOUSLY (1968).

FACILITY: V. I. ULYANOV ELECTRICAL ENGNG. INST., LENINGRAD, USSR.

UNCLASSIFIED

APPROVED FOR RELEASE: 09/17/2001 CIA-RDP86-00513R002201620005-3"

"APPROVED FOR RELEASE: 09/17/2001 CIA-RDP86-00513R002201620005-3

1/3 023 UNCLASSIFIED PROCESSING DATE--04DEC70

TITLE--MUTAGENIC ACTION OF X RAYS ON EXTRACELLULAR PHAGE LAMBDA -U-

AUTHOR-(02)-KRIVISKIY, A.S., KTSOYAN, ZH.A.

COUNTRY OF INFO--USSR

SOURCE--GENETIKA 1970, 6(3), 65-77

DATE PUBLISHED--------70

SUBJECT AREAS--BIOLOGICAL AND MEDICAL SCIENCES

TOPIC TAGS--PHAGE, X RAY RADIATION BIOLOGIC EFFECT, RADIATION INDUCED MUTATION, DNA

CONTROL MARKING--NO RESTRICTIONS

DOCUMENT CLASS--UNCLASSIFIED

PROXY FICHE NO----FD70/605002/G01 STEP NO--UR/0473/70/006/003/0065/0077

CIRC ACCESSION NO--AP0139421

UNCLASSIFIED

APPROVED FOR RELEASE: 09/17/2001 CIA-RDP86-00513R002201620005-3"

"APPROVED FOR RELEASE: 09/17/2001 CIA-RDP86-00513R002201620005-3

2/3 023 UNCLASSIFIED PROCESSING DATE--04DEC70

CIRC ACCESSION NO--AP0139421

ABSTRACT/EXTRACT--(U) GP-0- ABSTRACT. THE MUTAGENIC EFFECT OF X RAYS WAS STUDIED IN EXTRACELLULAR RESTING LAMBDA SUB11 PHAGE (MULTIPLE MUTANT OF LAMBDA). DIRECT AND INDIRECT X IRRADN. RESULTED IN AN INCREASED FREQUENCY OF VIR MUTANTS; THIS WAS DUE NEITHER TO VIR MARKER RESCUE BY PROPHAGE LAMBDA IN LYSOGENIC CELLS IN THE BACTERIAL LAWN NOR TO INCREASED RADIORESISTANCE OF VIR MUTANTS. X RAYS EVIDENTLY HAD A TRUE MUTAGENIC EFFECT ON THE EXTRACELLULAR PHAGE. X RAY INACTIVATION OF LAMBDA 11 HAD ONE HIT KINETICS, WHILE MUTATION INDUCTION HAD MULTI HIT KINETICS. WHEN IRRADN. WAS CARRIED OUT IN PHOSPHATE BUFFER, THE RELATIVE FREQUENCY OF VIR MUTANTS WAS HIGHER AT THE SAME DOSE. THEREFORE, THE INDIRECT EFFECT OF X RAYS MAKES A DEFINITE CONTRIBUTION TO THE TOTAL NO. OF INDUCED MUTANTS. AT EQUAL SURVIVAL RATES, THE NO. OF VIR MUTAANTS WAS SOMEWHAT HIGHER WHEN THE X RAY EFFECT WAS DIRECT, WHICH IS APPARENTLY LATED TO A LOWER FREQUENCY OF DOUBLE BREAKS IN PHAGE DNA. AT THE MAX. DOSE OF IRRADN. IN THE BROTH (500 KR), WHEN IRRADIATED PHAGES WERE PLATED ON STRAINS NOT CARRYING MUTATIONS FOR DEFECTIVE REPAIR OR RECOMBINATION (UVR PRIME POSITIVE, HCR PRIME POSITIVE, REC PRIME POSITIVE), THE NO. OF VIR MUTANTS AMONG SURVIVORS WAS 15 FOLD GREATER THAN BACKGROUND LEVELS. WHEN IRRADIATED PHAGES WERE PLATED ON LYSOGENIC STRAINS WITH REPAIR OR RECOMBINATION DEFECTS (HCR PRIME NEGATIVE, UVR PRIME NEGATIVE, REC PRIME NEGATIVE), THE VIR MUTANT FREQUENCY DECREASED, WHILE SURVIVAL OF NONIRRADIATED AND IRRADIATED PHAGES LAMBDA SUB11 AND LAMBDA SUB11 VIR (WITH COMPLETE VIR MUTATION) WERE VIRTUALLY IDENTICAL IN ALL STRAINS (HCR PRIME POSITIVE, HCR PRIME NEGATIVE, REC PRIME NEGATIVE).

UNCLASSIFIED

APPROVED FOR RELEASE: 09/17/2001 CIA-RDP86-00513R002201620005-3"

"APPROVED FOR RELEASE: 09/17/2001 CIA-RDP86-00513R002201620005-3

3/3 023 UNCLASSIFIED PROCESSING DATE--04DEC70

CIRC ACCESSION NO--AP0139421

ABSTRACT/EXTRACT--IT IS ASSUMED THAT PHAGES CARRYING PRE MUTATIONAL DEFECTS AFTER IRRADN. ARE CONVERTED TO VIR MUTANTS LESS EFFECTIVELY WHEN THEY DEVELOP IN BACTERIAL STRAINS WITH REPAIR OR RECOMBINATION DEFECTS.

FACILITY: INST. MOL. BIOL., EREVAN, USSR.

UNCLASSIFIED

APPROVED FOR RELEASE: 09/17/2001 CIA-RDP86-00513R002201620005-3"

"APPROVED FOR RELEASE: 09/17/2001 CIA-RDP86-00513R002201620005-3

USSR
PHYSICS
Fluid Dynamics

USSR

UDC 533.536.423.1+532

KTSOYEV, A.

"Interpolation of a Configuration Interval on the Basis of High-Temperature Expansion"

Sb. nauch. rabot aspirantov. Un-t druzhby narodov im. Patrisa Lumumby. Fak. fiz.-mat. i yestestv. n. (Collection of Scientific Works of Aspirants. University of People's Friendship imeni Patrice Lumumba. Faculty pf Physicomathematical and Natural Sciences), 1972, No 11, pp 109-113 (from RZh-Fizika, No 1, Jan 73, Abstract No 1Ye13)

Translation: With the aid of an interpolation calculation of a configuration interval for a statistical sum the equation of state was obtained in the form:

$$P(v_1, \theta) \; ; \; P_0(v_1, \theta)e^{-1/P_0 \, dU_2/dv},$$

where $\theta = kT$, P is pressure, v is volume, and U_0 is the average energy of attraction. The applicability of the equation obtained to actual physical systems is discussed.

1/1

APPROVED FOR RELEASE: 09/17/2001 CIA-RDP86-00513R002201620005-3"

"APPROVED FOR RELEASE: 09/17/2001 CIA-RDP86-00513R002201620005-3

USSR

KU, Y. N.

"Analysis of Nonlinear Control Systems"

Tr. IV Vses. Soveshch. po Avtomat. upr., 1968. Teoriya Avtomat. upr. [Works of Fourth All-Union Conference on Automatic Control, 1968. The Theory of Automatic Control], Moscow, Nauka Press, 1972, pp 24-42, Discussion 74-79 (Translated from Referativnyy Zhurnal, Kibernetika, No 3, Moscow, 1973, Abstract No 3 V280 by the author).

Translation: The report consists of six parts. 1. The method of the phase space and conversion of state variables. 2. The Taylor-Cauchy transform and the method of transition to means for a set for random inputs. 3. The method of Walter functions for nonlinear, unstable systems with deterministic and stochastic input signals. 4. Lyapunov stability and synthesis of nonlinear systems. 5. Some generalizations of the Popov-Kalman-Yakubovich theorems and their applications. 6. Periodic oscillations in nonlinear systems with limiting cycles.

1/1

APPROVED FOR RELEASE: 09/17/2001 CIA-RDP86-00513R002201620005-3"

"APPROVED FOR RELEASE: 09/17/2001 CIA-RDP86-00513R002201620005-3

USSR UDC 51:801

KUANETSOV, I. P.

"Semantic Analysis of Precise Prescriptions"

Nauch. i Prakt. Probl. Bol'shikh Sistem. Sekts. Bol'shiye Sistemy. Teoriya, Metodol., Modelir. [Scientific and Practical Problems of Large Systems. Large Systems Section. Theory, Methodology and Modeling], Moscow, Nauka Press, 1971, pp 191-202, (Translated from Referativnyy Zhurnal, Kibernetika, No 10, 1971, Abstract No 10 V861, unsigned).

Translation: Aspects of cemantic analysis of text using the theory of algorithms are discussed.

1/1

APPROVED FOR RELEASE: 09/17/2001 CIA-RDP86-00513R002201620005-3"

"APPROVED FOR RELEASE: 09/17/2001 CIA-RDP86-00513R002201620005-3

USSR UDC 548.0:533.16

KUANG, LE, ROZHANSKIY, V. N., Institute of Crystallography, Academy of Sciences USSR

"Peculiarities of the Internal Structure of Threadlike Crystals of NaCl, KCl and KBr at High Temperatures"

Moscow, Kristallografiya, Vol 18, No 2, Mar-Apr 73, pp 413-415.

Abstract: The internal friction of threadlike crystals was measured in a vacuum installation. All curves showed a clear maximum in the temperature interval between 100 and 150° for measurements at frequencies up to 500 Hz. Some threadlike crystals showed a second maximum in the 30-70° C interval. The variation in height of the peak on oscillating amplitude and crystal thickness indicates that it is related to the movement of dislocations. This peak disappears in well-annealed crystals. However, the introduction of new dislocations by plastic twisting does not restore the peak. The annealing process eliminates not only dislocations, but also point defects, which are not restored by subsequent deformation; therefore, the peak probably results from the interaction of dislocations with point defects.

1/1

APPROVED FOR RELEASE: 09/17/2001 CIA-RDP86-00513R002201620005-3"

"APPROVED FOR RELEASE: 09/17/2001 CIA-RDP86-00513R002201620005-3

Nitrogen Compounds

USSR UDC 542.91:547.824

AZERBAYEV, I. N., ESKAIROV, M. E., and KUATBEKOV, A. M.

"The Synthesis of Cyanoethyl Ethers of N-Alkyl-2,6-diphenyl-4-ethylpiperidin-4-one"

Izvestiya Akademii Nauk Kazakhskoy SSR, Seriya Khimicheskaya, No 2, Mar-Apr 71, pp 68-70

Abstract: The addition of acrylonitrile to ethylpiperidones takes place in 40% aqueous potassium hydroxide. Acrylonitrile adds to the hydroxyl group to form β-cyanoethyl ethers of 1-alkyl-2,6-diphenyl-4-ethylpiperidin-4-one.

The condensation of freshly distilled acrylonitrile, in the presence of stannic chloride, with 2,6-diphenylpiperidin-4-one and 2,6-diphenyl-4-ethylpiperidine-4-one yields 1-β-cyanoethyl-2,6-diphenylpiperidine-4-one and 1-β-cyanoethyl-2,6-diphenyl-4-ethylpiperidin-4-one.

The structures of the compounds were confirmed by infrared spectroscopy.

The products were separated and identified by thin layer chromatography.

1/1

APPROVED FOR RELEASE: 09/17/2001 CIA-RDP86-00513R002201620005-3"

"APPROVED FOR RELEASE: 09/17/2001 CIA-RDP86-00513R002201620005-3

Extraction and Refining

USSR

UDC 669.243.881:669.046.542

VYCHEROV, V. G., TSEMEKHMAN, L. SH., SHIROKOVA, Z. F., and KURACHEV, P. P.

"Carbon Behavior in Smelting Oxidized Nickel Ores to Ferronickel"

Moscow, Tsvetnyye metally, No 5, May 72, pp 21-23

Abstract: The principal factors responsible for carbon behavior in the process of smelting oxidized nickel ores resulting in frothing are the composition of the melt and the oxidizer consumption rate. The higher the consumption (all other conditions being equal), the higher the carbon solubility in the metal melt. Silicon and nickel are shown to reduce carbon solubility in iron while chromium has the opposite effect. It is shown here that frothing is caused primarily by the reaction of ferrous oxide with the carbon dissolved in the ferronickel. Addition of small amounts of ferrosilicon to the melt will eliminate frothing in the process of smelting to ferronickel, regardless of the melt's composition. Preliminary ore reduction with a gaseous agent will eliminate the presence of carbon in the melt. Simultaneous melting of both reduced and unreduced ores is shown to have practical application in that iron ore is more readily reduced at lower temperatures than magnesium ore and may require

1/2

APPROVED FOR RELEASE: 09/17/2001 CIA-RDP86-00513R002201620005-3"

"APPROVED FOR RELEASE: 09/17/2001 CIA-RDP86-00513R002201620005-3

USSR

VYCHEROV, V. G., et al, Tsvetnyye metally, No 5, May 72, pp 21-23

much shorter time for the preliminary reducing roasting of the overall amount of ore. (1 illustration, 1 table, 5 bibliographic references)

2/2

APPROVED FOR RELEASE: 09/17/2001 CIA-RDP86-00513R002201620005-3"

"APPROVED FOR RELEASE: 09/17/2001 CIA-RDP86-00513R002201620005-3

USSR

UDC 621.375.019.64:621.396

SEMENOV, B. P., KUBALOV, R. I.

"Transistorized Superhigh Frequency Amplifier Operating at 500 Megahertz"

Materialy nauchno-tekhn. konferentsii. Leningr. elektrotekhn. in-t svyazi. Vyp. 4 (Materials of the Scientific and Technical Conference. Leningrad Electrotechnical Communications Institute. Vyp. 4) Leningrad, 1970, pp 94-96 (from RZh-Radiotekhnika, No 9, Sep 70, Abstract No 9D11)

Translation: This article contains information on the development and results of experimental studies of a single-cascade transistorized superhigh-frequency amplifier operating at 500 megahertz. The device insures a gain of 6.8 decibels in the operating frequency band of 30 megahertz with a noise factor F = 4.5 decibels.

1/1

APPROVED FOR RELEASE: 09/17/2001 CIA-RDP86-00513R002201620005-3"

"APPROVED FOR RELEASE: 09/17/2001 CIA-RDP86-00513R002201620005-3

USSR

UDC 621.396.677.71

KUBALOV, R. I.

"Characteristic Resistance of a Slot Antenna with an Infinitely Thin Metal Exciter"

Materialy nauchno-tekhn. konferentsii. Leningr. elektrotekhn. in-t svyazi. Vyp. 4 (Materials of the Scientific and Technical Conference. Leningrad Electrotechnical Communications Institute. Vyp. 4), 1970, pp 81-85 (from RZh-Radiotekhnika, No 8, Aug 70, Abstract No 8B40)

Translation: Using the Schwartz-Christoffel conversion and the elliptic Jacoby functions, formulas are derived for the linear capacitance and characteristic resistance of a slot antenna with an exciting strip of zero width in the slot aperture. Here, the thickness of the screen in which the slot is cut is taken into consideration. The graphs which permit determination of the characteristic resistance of a slot antenna by its known configuration are presented. There are two illustrations and a six-entry bibliography.

1/1

APPROVED FOR RELEASE: 09/17/2001 CIA-RDP86-00513R002201620005-3"

"APPROVED FOR RELEASE: 09/17/2001 CIA-RDP86-00513R002201620005-3

USSR

UDC 621.396.677.71

KUBALOV, R. I.

"Characteristic Resistance of a Rectangular Line Located in the Slot Aperture"

Materialy nauchno-tekhn. konferentsii. Leningr. elektrotekhn. in-t svyazi. vyp. 4 (Materials of the Scientific and Technical Conference. Leningrad Electrotechnical Communications Institute. Vyp. 4), 1970, pp 85-89 (from RZh-Radiotekhnika, No 8, Aug 70, Abstract No 8B41)

Translation: Using the Schwartz-Christoffel conversion and the elliptic Jacoby function, the capacitance and characteristic resistance of a rectangular line in the slot aperture is calculated considering the thickness of the line. The results of the calculation are presented in the form of graphs. Knowing the configuration of the investigated structure, it is possible to use these graphs directly to determine its characteristic resistance. There are two illustrations and a five-entry bibliography.

1/1

APPROVED FOR RELEASE: 09/17/2001 CIA-RDP86-00513R002201620005-3"

"APPROVED FOR RELEASE: 09/17/2001 CIA-RDP86-00513R002201620005-3

USSR

UDC: 681.327

BOCHKIN, Yu. Ya., ZHIVOV, N. P., KUBANIN, Yu. Z., MOROZOV, V. Ye., RYZIKOV, M. L., Central Scientific Research Institute of Large-Scale Automation

"Pneumoelectronic Accumulator of Statistical Information"

Moscow, Otkrytiya, Izobreteniya, Promyshlennyye Obraztsy, Tovarnyye Znaki, No 13, May 72, Author's Certificate No 335705, Division G, filed 29 Jun 70, published 11 Apr 72, p 211

Translation: This Author's Certificate introduces a pneumoelectronic accumulator of statistical information. Connected to the input channels is a pneumocommutator controlled by an address selection module. This commutator is connected in series to a normalizer. The accumulator also contains an analog-digital converter connected through a counter to a data output module whose output is connected to a printer and a puncher. The accumulator also includes a control unit connected to a timer, to the analog-digital converter, and to the data output module. As a distinguishing feature of the patent, in order to extend the range of signals which can be monitored and to simplify the design, an electric input signal commutator, normalizer, and adder are incorporated in the device. The con-

1/2

APPROVED FOR RELEASE: 09/17/2001 CIA-RDP86-00513R002201620005-3"

"APPROVED FOR RELEASE: 09/17/2001 CIA-RDP86-00513R002201620005-3

USSR

BOCHKIN, Yu. Ya. et al., USSR Author's Certificate No 335705

trolling input of the electric signal commutator is connected to the address selection module, and the output is connected through the extra normalizer to the adder. The output of the adder is connected to the analog--digital converter, and a second input of the adder is connected through the main normalizer to the pneumocommutator.

2/2

APPROVED FOR RELEASE: 09/17/2001 CIA-RDP86-00513R002201620005-3"

"APPROVED FOR RELEASE: 09/17/2001 CIA-RDP86-00513R002201620005-3

USSR UDC: 621.375.82

KUBAREV, A. V., PRONIN, V. R.

"Basic Trends of Laser Emission Dosimetry and Requirements for Meters"

Metrologiya, 1973, No 3, pp 45-47 (from RZh-Fizika, No 8, Aug 73, abstract No 8D1175 by S. F. Sh.)

Translation: The authors discuss the characteristics of laser emission which determine the danger of its effect on the human organism as a function of the properties of exposed biological tissues and the conditions of exposure. Possible methods of measuring these characteristics are indicated. Bibliography of 9 titles.

1/1

APPROVED FOR RELEASE: 09/17/2001 CIA-RDP86-00513R002201620005-3"

"APPROVED FOR RELEASE: 09/17/2001 CIA-RDP86-00513R002201620005-3

USSR UDC: 621.375.82

IVLEV, YE. I., RYSIN, V. V., KUBAREV, A. V.

"Differential Series-Parallel Device for Measurement of High and Moderate Laser Radiation Levels"

Dokl. Nauchno-Tekhn. Seminara. Metrol. V Radioelektron. Tezisy Ch. 1 [Reports of Scientific and Technical Seminar, Metrology in Electronics, Summaries, Part I], Moscow, 1970, pp 123-129, (Translated from Referativnyy Zhurnal Fizika, No. 8, 1970, Abstract #8D1164, by V. P. Veyko).

Translation: A calorimetric laser radiation and power meter is described. Parallel connection of the measuring and calibrating inputs assures high measurement accuracy. The meter can be used over a wide range of wave lengths in the visible and IR spectra. Power levels of 1-100 w can be measured. The errors in the device, which vary from 3-6% depending on the power level measured, are studied in detail.

1/1

APPROVED FOR RELEASE: 09/17/2001 CIA-RDP86-00513R002201620005-3"

"APPROVED FOR RELEASE: 09/17/2001 CIA-RDP86-00513R002201620005-3

USSR

K

UDC: [illegible]

YUGOV, V. A., VOROB'YEV, L. N., KUBAREV, A. V., POTAPOV, [illegible]

"A Thin-Film Laser Emission Measurement Receiver"

Sokl. Nauchno-tekhn. seminara "Metrol. v radiolokatsii." [illegible] of the Scientific and Technical Seminar on Metrology in [illegible] maries, Part 1), Moscow, 1970, pp 131-136 (from RZh-Radiotekhnika, No 7, [illegible], Abstract No 7D244)

Translation: The authors give the design and technical characteristics of a thin-film receiver designed for precision measurements of low levels of the power of radiation flux from continuous-emission lasers. The indicator film is made from a semiconductor material with a high temperature coefficient of resistance [illegible] germanium by the method of vaporization in a vacuum. The range of measurable emission powers is 10^{-2}-10^{-5} [W] in the wave band of 0.4-1.[illegible] μ. The limiting sensitivity is 0.1 μW. A. K.

1/1

APPROVED FOR RELEASE: 09/17/2001 CIA-RDP86-00513R002201620005-3"

"APPROVED FOR RELEASE: 09/17/2001 CIA-RDP86-00513R002201620005-3

USSR K UDC: [illegible]

IVLEV, Ye. I., RYSIN, V. V., KUBAREV, A. V.

"Differential Series-Parallel Measuring Device for High and Moderate Laser Emission Levels"

Dokl. Nauchno-tekhn. seminara "Metrol. v radioelektron." [illegible] (Reports of the Scientific and Technical Seminar on Metrology in Radio Electronics. Summaries, Part 1), Moscow, 1970, pp 123-129 (from RZh-Radiotekhnika, No 7, Jul 70, Abstract No 7D247)

Translation: A block diagram is given for a series-parallel meter; the measurement procedure is described and the measurement error is analyzed. The meter may operate both in the visible and in the near infrared regions; the interval of measurable power levels is 1-100 W. A. K.

1/1

APPROVED FOR RELEASE: 09/17/2001 CIA-RDP86-00513R002201620005-3"

"APPROVED FOR RELEASE: 09/17/2001 CIA-RDP86-00513R002201620005-3

Controls

USSR UDC: 621.373.43:621.397.62(088.8)

TIKHOMIROV, L. M., BELYAYEV, R. P., LOBAN, V. I., KUBAREV, N. S.

"A Device for Automatic Frequency and Phase Control."

USSR Author's Certificate No 265962, filed 8 Jun 66, published 1 Jul 70 (from RZh-Radiotekhnika, No 1, Jan 71, Abstract No 1D14 P)

Translation: This Author's Certificate introduces a device for automatic frequency and phase control based on a cold-cathode tube. The tube has a discharge preparation electrode connected through a resistor to a voltage source, and a controlling electrode connected through a capacitor to a source of synchronization pulses. The plate circuit is connected through a capacitor to a sawtooth voltage source and through an RC filter to the output. The discharge preparation electrode is connected through a resistor to the filter capacitor.

1/1

APPROVED FOR RELEASE: 09/17/2001 CIA-RDP86-00513R002201620005-3"

"APPROVED FOR RELEASE: 09/17/2001 CIA-RDP86-00513R002201620005-3

USSR

UDC 681.326.74

KUBARSKIY, A. M., Khar'kov Branch of the Thermoelectric Design Institute

"A Device for Indicating the Sequence of Discrete Events"

USSR Author's Certificate, Class G 06 s 3/12, No 338897, filed 2 Oct 69, published 12 June 72 (from RZh-Avtomatika Telemechanika i Vychislitel'naya Tekhnika, No 3, Mar 73, Abstract No 3 A340 P)

Translation: A device is suggested for indicating the sequence of discrete events in time; it contains sensors of the object under control, connected to the inputs of the indicator, and a control unit with one group of outputs connected to the control inputs of the indicator and the other group of outputs connected to the inputs of a time counter. There are pulse counters whose outputs are connected to one of the inputs of the control unit. To avoid errors in recording and simplify use, the apparatus contains a sensitive element with some inputs connected to the outputs of the sensors on the object under control and others connected to the outputs of the control block, while the outputs of the sensitive element are connected to the control input of the control block. Five illustrations.

1/1

APPROVED FOR RELEASE: 09/17/2001 CIA-RDP86-00513R002201620005-3"

"APPROVED FOR RELEASE: 09/17/2001 CIA-RDP86-00513R002201620005-3

USSR UDC: 621.391.2:519.27

KUBARSKIY, A. N.

"Device for Recording the Sequence of Discrete Events"

Radiolektronika Letatel'n. Apparatov [Aircraft Electronics - collection of works], No 3, Khar'kov Aviation Institute, 1971, pp 129-133 (translated from Referativnyy Zhurnal Avtomatika, Telemekhanika i Vychislitel'naya Tekhnika, No 3, 1972, Abstract No 3 A322, from the resume).

Translation: The author conducted a study of the performance of test functions by protective devices which was essentially a determination of the operability of the object being tested by diagnosis of 2 states of its parameters. The set of the test object and protective devices was analyzed as a source of discrete events. A description and diagram of the device for recording the sequence of discrete events were presented. The switching frequency of input channels of the device was selected, taking into account the time required for interrogation, processing, and recording of information. 1 figure; 4 references.

1/1

APPROVED FOR RELEASE: 09/17/2001 CIA-RDP86-00513R002201620005-3"

"APPROVED FOR RELEASE: 09/17/2001 CIA-RDP86-00513R002201620005-3

USSR UDC: 621.391.82:621.332.6

DOROSINSKIY, L. R., KUBASHEVSKAYA, O. V.

"Effect Which Short Circuits in a DC Contact Network Have on Communications Lines"

Nauch. tr. Omsk. in-t inzh. zh.-d. transp. (Scientific Works. Omsk Institute of Railway Transportation Engineers), 1970, 119, pp 53-57 (from RZh--Radiotekhnika, No 6, Jun 71, Abstract No 6A226)

Translation: The paper deals with the effects which commutation processes due to short circuits of the contact conductor across the rails have on a communications network. It is shown that the frequency spectra are different for various types of short circuits. The highest amplitudes of interfering voltages arise when the short circuit is opened, which may cause appreciable distortion of information transmitted over the communications circuits. Three illustrations, one table, bibliography of two titles. Resumé.

1/1

APPROVED FOR RELEASE: 09/17/2001 CIA-RDP86-00513R002201620005-3"

"APPROVED FOR RELEASE: 09/17/2001 CIA-RDP86-00513R002201620005-3

USSR

UDC 621.373.531

VISHNEVSKIY, V. N., IZOKH, V. V., and KUBASOV, A. A.

"Nanosecond Range Pulse Shaper Based on Semiconductor Devices"

V sb. Tunnel'n. diody v vychisl. i izmerit. tekhn. (Tunnel Diodes in Computer and Measurement Technology — collection of works), Riga, "Zinatne", 1972, pp 217-223 (from RZh-Radiotekhnika, No 11, Nov 72, Abstract No 11 G134)

Translation: The authors study the possibility of forming nanosecond duration pulses from voltage differentials. Real shaper circuits are given based on tunnel diodes, semiconductor diodes with charge accumulation, and their combinations with semiconductor triodes. Comparative characteristics are presented for the shapers along with their experimental data. Resume.

1/1

APPROVED FOR RELEASE: 09/17/2001 CIA-RDP86-00513R002201620005-3"

"APPROVED FOR RELEASE: 09/17/2001 CIA-RDP86-00513R002201620005-3

1/2 016 UNCLASSIFIED PROCESSING DATE--27NOV70

TITLE--SOME CLINICAL ASPECTS AND DIAGNOSIS OF DYSENTERY -U-

AUTHOR-(03)-MITCHENKO, I.K., NENIKOVABOGDANOVICH, A.I., KUBASOV, I.G.

COUNTRY OF INFO--USSR

SOURCE--VRACHEBNOYE DELO, 1970, NR 5, PP 146-149

DATE PUBLISHED--------70

SUBJECT AREAS--BIOLOGICAL AND MEDICAL SCIENCES

TOPIC TAGS--DYSENTERY, DRUG TREATMENT, ANTIBIOTIC, SULFA DRUG

CONTROL MARKING--NO RESTRICTIONS

DOCUMENT CLASS--UNCLASSIFIED

PROXY REEL/FRAME--3001/1023 STEP NO--UR/0475/70/000/005/0146/0149

CIRC ACCESSION NO--AP0126661

UNCLASSIFIED

APPROVED FOR RELEASE: 09/17/2001 CIA-RDP86-00513R002201620005-3"

"APPROVED FOR RELEASE: 09/17/2001 CIA-RDP86-00513R002201620005-3

2/2 016 UNCLASSIFIED PROCESSING DATE--27NOV70

CIRC ACCESSION NO--AP0126661

ABSTRACT/EXTRACT--(U) GP-0- ABSTRACT. A STUDY OF 200 PATIENTS WITH DYSENTERY IS PRESENTED. THE DIAGNOSIS WAS CONFIRMED BACTERIOLOGICALLY IN 150 PATIENTS (B. SONNEI, IN 132; B. FLECHSNERI, IN18). THE FORM WAS MILD IN 60.5PERCENT, AVERAGE SEVERE IN 36.5PERCENT AND SEVERE IN 3PERCENT. THE TREATMENT WAS CARRIED OUT BY COMBINING ANTIOBIOTICS WITH SULFANYLAMIDE PREPARATIONS. MODERN DYSENTERY IS CHARACTERIZED BY MILD ATYPIC COURSES. THERE WAS NO TRANSITION OF DYSENTERY INTO THE CHRONIC FORM. FACILITY: KIYEVSKOGO INSTITUTA USOVERSHENSTVOVANIYA VRACHEY.

UNCLASSIFIED

APPROVED FOR RELEASE: 09/17/2001 CIA-RDP86-00513R002201620005-3"

"APPROVED FOR RELEASE: 09/17/2001 CIA-RDP86-00513R002201620005-3

USSR

UDC 621.357.1.035(088.8)

KUBASOV, V. L., VOLKOV, G. I.

"Method of Separation of Alkali Metal Amalgams"

USSR Author's Certificate No 303367, Filed 29/10/62, Published 5/07/71, (Translated from Referativnyy Zhurnal, Khimiya, No 3, 1972, Abstract No 3 L261 P from the Resume).

Translation: A method of separation of alkali metal amalgams during mercury electrolysis using a graphite cathode by application of an external current differs in that in order to intensify the process, the graphite cathode is submerged in the amalgam and the process is conducted at D_k, exceeding the D of the short-circuit current of the cathode with the amalgam, but less than the D of the short-circuit current of the cathode with mercury.

1/1

APPROVED FOR RELEASE: 09/17/2001 CIA-RDP86-00513R002201620005-3"

"APPROVED FOR RELEASE: 09/17/2001 CIA-RDP86-00513R002201620005-3

USSR

UDC 669.71.472

ZAZOVSKIY, D. G., KAMAR'YAN, G. M., KUBASOV, V. L., SHIFRIN, L. N.

"Method of Connecting Conducting Buses"

USSR Author's Certificate No 280867, filed 8 Jun 68, published 3 Dec 70 (from RZh-Metallurgiya, No 7, Jul 1971, Abstract No 7G210P)

Translation: A method of connecting conducting buses of electrolysis baths by a low-melting alloy in the gap between the ends of the buses is proposed. In order to reduce oxidation of the alloy and improve the electrical contact between the buses, the amount of heat released from the contact connection is regulated so that during operation of the bath, the alloy is kept in the solid state, and during assembly and disassembly of the contact connection, in the liquid state. There is 1 illustration.

1/1

APPROVED FOR RELEASE: 09/17/2001 CIA-RDP86-00513R002201620005-3"

"APPROVED FOR RELEASE: 09/17/2001 CIA-RDP86-00513R002201620005-3

1/2 017

UNCLASSIFIED

TITLE--KINETICS OF SODIUM DISSOLUTION IN A SODIUM CHLORIDE MELT DURING DILUTION OF THE METALLIC PHASE WITH LEAD -U-

PROCESSING DATE--23OCT70

AUTHOR-(05)-BUSSEMACHUKAS, V.B., KUBASOV, V.L., STATSENKO, S.I., MALANINA, I.B., ZATELSKIY, S.A.

COUNTRY OF INFO--USSR

SOURCE--ZH. PRIKL. KHIM. (LENINGRAD) 1970, 43(2) 280-4

DATE PUBLISHED--------70

SUBJECT AREAS--CHEMISTRY

TOPIC TAGS--ELECTROLYSIS, SODIUM CHLORIDE, SOLUBILITY, SODIUM, LEAD, ELECTRIC CURRENT, CHLORIDE

CONTROL MARKING--NO RESTRICTIONS

DOCUMENT CLASS--UNCLASSIFIED

PROXY REEL/FRAME--1983/0918

STEP NO--UR/0080/70/043/002/0280/0284

CIRC ACCESSION NO--AP0053842

UNCLASSIFIED

APPROVED FOR RELEASE: 09/17/2001 CIA-RDP86-00513R002201620005-3"