"APPROVED FOR RELEASE: 09/17/2001 CIA-RDP86-00513R002201620006-2

2/2 017

UNCLASSIFIED

CIRC ACCESSION NO--AP0053842 PROCESSING DATE--23OCT70

ABSTRACT/EXTRACT--(U) GP-0- ABSTRACT. THE DISSOLN. RATE OF NA FROM NA-PB LIQ. MIXTS. OF A 1-10 WT. PERCENT NA CONCN. IN AN AGITATED NACL MELT WAS STUDIED EXPTL. IN THE PRESENCE OF CL AT 850DEGREES. THE DEPENDENCE OF THE CURRENT D. OF NA DISSOLN. (I) IN A-CM PRIME2 ON THE NA CONCN. IN THE NA-PB MIXT. IN WT. PERCENT (C) WAS DETD. AS I EQUALS 0.0095C PRIME2. THE CURRENT EFFICIENCY OF THE ELECTROLYSIS OF THE NACL MELT WITH A PB CATHODE IN PERCENT (A) WAS CALCD. AS A EQUALS 100-0.95C PRIME2-I SUBT, WHERE I SUBT IS THE TOTAL CURRENT D. IN A-CM PRIME2. THE CALCNS. AGREE WITH EXPT. PROVING THE FACT THAT CURRENT LOSSES ARE PRIMARILY DETD. BY THE REVERSE DISSOLN. OF NA IN THE NACL MELT AND BY THE REACTION WITH CL.

UNCLASSIFIED

APPROVED FOR RELEASE: 09/17/2001 CIA-RDP86-00513R002201620006-2"

"APPROVED FOR RELEASE: 09/17/2001 CIA-RDP86-00513R002201620006-2

Acc. Nr: AP0055992

Abstracting Service: CHEMICAL ABST. 6 70

Ref. Code: UR0050

K

113121v Content of mercury found in amalgam scrubber decomposers. Rybkin, V. I.; Kulikov, V. I.; Mityushina, K. A. (USSR). *Zh. Prikl. Khim. (Leningrad.)* 1970, 43(2), 327-31 (Russ). A vertical 300-mm diam. by 2.52-m. long amalgam decomposer scrubber loaded to heights of 840, 1680, and 2520 mm with 5-10, 15-20, and 40-50 mm graphite particles was used in an efficiency study at Hg flow rates of 8-22 l./min. Equations relating decomposer efficiency to the above parameters were developed. Amts. of Hg required for amalgam decompn. were calcd. and the results agreed to ±10% with exptl. detns. Decomposer scrubbers loaded with 15-20-mm particles were most efficient since they required the least amt. of Hg. DPJR

1/1

REEL/FRAME 19841321

APPROVED FOR RELEASE: 09/17/2001 CIA-RDP86-00513R002201620006-2"

"APPROVED FOR RELEASE: 09/17/2001 CIA-RDP86-00513R002201620006-2

USSR

PATON, B.YE., and KURASOV, V.N.

UDC: 621.791:505.12

"Experiment in the Welding of Metals in Space"

Kiev, Avtomaticheskaya Svarka, No 5, May 70, pp 7-12

Abstract: Experiments were conducted on the welding of metals under space conditions. The basic features of space as a medium for performing welding work consist of: the presence of weightlessness; the existence of a deep vacuum in the surrounding space, with a very high rate of diffusion of the gases and vapors formed in the metal fusion zone or entering there; the very wide temperature range under which the fused and crystallizing metal may find itself. The development of space technology of metals led to the creation of such methods as low-pressure plasma are cutting and welding, low-pressure consumable electrode welding, and contact (spot and seam) vacuum welding. A complex of equipment was designed for testing various welding methods and devices under vacuum and weightlessness conditions aboard f flying laboratory. The self-contained "Vulcan" device was used in the experiments to conduct welding by electron beam, plasma arc, and consumable electrode. From the results obtained, it was found that the process of fusion and cutting by electron beam proceeds in a stable manner and ensures the required conditions for normal forming of a weld joint or cut. The basic parameters of the conditions of consumable electrode welding conducted aboard the Soyuz-6

1/2

APPROVED FOR RELEASE: 09/17/2001 CIA-RDP86-00513R002201620006-2"

"APPROVED FOR RELEASE: 09/17/2001 CIA-RDP86-00513R002201620006-2

USSR

PATON, B.YE., Avtomaticheskaya Svarka, No 5, May 70, pp 7-12

spaceship in 1969 and also the structure of the seam and weld-affected zone remained practically the same as in welding on Earth and in the flying laboratory" the required depth of fusion of weldable metal was attained; metal of seams was dense, without gas and nonmetallic inclusions; elimination of gases from the molten metal was satisfactory. No substantial deviations from the given chemical composition of the weld metal and remelted electrode metal were detected. Investigation of consumable electrode arc welding showed that under conditions of prolonged weightlessness, regardless of the high diffusion rate, the formation of a continuous stable arc discharge in electrode material vapors is possible. Low-pressure plasma arc welding with the given device did not yield the results expected. Apparently, the rate of plasma-forming gas diffusion into the atmosphere of the spaceship exceeded the expected rate. Therefore, its concentration in the arc gap was inadequate for contraction of the compressed arc. At the same time, the high rate of gas diffusion through the hatch of the spaceship exerted a positive effect on electron-beam cutting. The liberation of gases observed in this case did not affect the reliability of performance of the electron-beam equipment. Small scale welding devices included in the Vulcan arrangement showed adequate reliability and efficiency under space conditions. It was recommended that these devices are to be enlarged for actual operation in space.

2/2

APPROVED FOR RELEASE: 09/17/2001 CIA-RDP86-00513R002201620006-2"

"APPROVED FOR RELEASE: 09/17/2001 CIA-RDP86-00513R002201620006-2

Inorganic Compounds

USSR

UDC 546.185+631.893.12:546.185-326

KUBASOVA, L. V., Moscow State University imeni L. V. Lomonosov, Department of Chemical Technology

"Polyphosphoric Acids and Their Ammonium Salts"

Moscow, Uspekhi Khimii, Vol XL, No 1, Jan 1971, pp 3-23

Abstract: Containing two elements important in plant nutrition, poly- and metaphosphates are of the greatest scientific and practical significance, both as fertilizer bases and as constituents of fodders and commercial salts. Because of their especially high nutritive content, the poly- and metaphosphates offer marked advantages over other fertilizer bases. However, the production technology of these compounds, and their conversion into usable concentrated fertilizers, are not fully developed, while existing data on the chemistry and technology of dehydrated ammonium phosphates have not been summarized. The present paper is a general summary of American, Soviet, Japanese and French research in this field, and a statement of the difficulties faced in this area. The 113-item bibliography includes some 15 sources relating to Soviet work on these compounds.

1/5

APPROVED FOR RELEASE: 09/17/2001 CIA-RDP86-00513R002201620006-2"

"APPROVED FOR RELEASE: 09/17/2001 CIA-RDP86-00513R002201620006-2

USSR

KUBASOVA, L. V., Uspekhi Khimii, Vol XL, No 1, Jan 1971, pp 3-23

Chemistry of Polyphosphoric Acids

Neither the quantitative nor the qualitative chemistry of the polyphosphoric (p. p.) acids is fully developed. The best analytical methods (paper-chromatographic), for example, does not offer identification of acids with more than nine P atoms in the chain, while only a few of the large number known have been obtained in crystalline form.

Physical properties of the p. p. acids have been widely studied, especially density and viscosity, which are very important from the point of view of industry. The density formula $d = (0.7101 + 0.1617c) - (11.7 \cdot 10^{-6}c)t$ (density in g/ml, temperature in °C, concentration in weight-percent of P_2O_5) has been determined by summarizing a large body of data. Significant contributions have been made by the Soviet researchers I. M. Mal'tseva, I. N. Shokin and Ye. L. Yakhontova (mid-sixties), who suppied a number of thermochemical constants which are very important technologically.

At the moment, industrial production of highly concentrated p. p. acids is based mainly on the electrothermal production and oxidation of phosphorus.

2/5

APPROVED FOR RELEASE: 09/17/2001 CIA-RDP86-00513R002201620006-2"

"APPROVED FOR RELEASE: 09/17/2001 CIA-RDP86-00513R002201620006-2

USSR

KUBASOVA, L. V., Uspekhi Khimii, Vol XL, No 1, Jan 1971, pp 3-23

The wet-process method, yielding up to 70% P_2O_5, though appropriate evaporating, atomizing, etc., equipment has been developed, is little used in industry on account of contamination factors. N. N. Postnikov (Scientific Institute of Fertilizers and Insectofungicides imeni Ya. V. Samoylov) in 1967 developed a new method of producing thermal concentrated phosphoric acids (103-110% H_3PO_4), based on the use of metal, unlined (nonrefractory) apparatus with water-cooled walls. Repeated rectification with use of organic solvents has been urged as a means of obtaining high concentrations of these acids (in laboratory tests, up to 77.8-93.8% P_2O_5 has been achieved).

Chemistry and Technology of Dehydrated Ammonium Phosphates

Extensive progress in this branch of chemistry is mainly owing to Soviet, German and American research since 1950.

The nuclear magnetic resonance method for analysis, already used for polymers, has proved extremely effective with phosphate mixtures. However, it has not been developed sufficiently for use in quantitative determinations of such mixtures.

3/5

APPROVED FOR RELEASE: 09/17/2001 CIA-RDP86-00513R002201620006-2"

"APPROVED FOR RELEASE: 09/17/2001 CIA-RDP86-00513R002201620006-2

USSR

KUBASOVA, L. V., Uspekhi Khimii, Vol XL, No 1, Jan 1971, pp 3-23

Of these ammonium salts, only two (the trimetaphosphate and the tetrametaphosphate) have been studied from the stereochemical point of view -- one of the many examples of wide gaps in this area of chemistry.

"Dehydrated phosphates" are those phosphates of polymer structure produced by the method method of thermal dehydration of the acid salts of orthophosphoric acid. This comparatively simple method is an important advance, already used to obtain the polyphosphates of sodium, potassium, lithium, etc., but not yet introduced into industry.

Information on the ammonium salts of the p. p. acids is extremely scant, owing to the impractibility of using thermal dehydration with those particular phosphates.

The following Soviet contributions to the chemistry of ammonium phosphates with the general formula $(NH_4PO_3)_n$ are noted: S. I. Vol'fkovich and L. V. Kubasova in 1964 devised a method for thermal dehydration of acid ammonium orthophosphates under pressure of ammonia gas, which offers great advantages in yield. S. I.

4/5

APPROVED FOR RELEASE: 09/17/2001 CIA-RDP86-00513R002201620006-2"

"APPROVED FOR RELEASE: 09/17/2001 CIA-RDP86-00513R002201620006-2

USSR

KUBASOVA, L. V., Uspekhi Khimii, Vol XL, No 1, Jan 1971, pp 3-23

Vol'kovich and A. I. Chekhovskikh (1966) studied new methods for producing ammonium polyphosphates on the basis of various phosphoric acids, including one with use of urea as a nitrogenous reagent. E. V. Britske and A. P. Dunayev have demonstrated theoretically the possibility of obtaining poly- and metaphosphates of ammonium from the interaction of phosphoric anhydride, ammonia and water vapor, in the gaseous phase; the yield would be acceptable, though some phosphates formed might also contain imido and amido groups. S. I. Vol'fkovich, t. I. Sakolova et al. (1967 and 1957) ran tests at the Scientific Institute of Fertilizers and Insectofungicides, and also Moscow University, producing phosphamine compounds from P_2O_5 and NH_3 in an attempt to find fertilizers not urea-bound.

5/5

APPROVED FOR RELEASE: 09/17/2001 CIA-RDP86-00513R002201620006-2"

"APPROVED FOR RELEASE: 09/17/2001 CIA-RDP86-00513R002201620006-2

1/2 019 UNCLASSIFIED PROCESSING DATE--27NOV70

TITLE--FORMATION OF KOP SUB3 .MOO SUB3 -U-

AUTHOR-(03)-VOLFKOVICH, S.I., KUBASOVA, L.V., KOZMINA, M.L.

COUNTRY OF INFO--USSR

SOURCE--DOKL. AKAD. NAUK SSSR 1970, 190(5), 1101-2

DATE PUBLISHED-------70

SUBJECT AREAS--CHEMISTRY

TOPIC TAGS--X RAY ANALYSIS, PAPER CHROMATOGRAPHY, POTENTIOMETRIC TITRATION, POTASSIUM COMPOUND, PHOSPHATE, MOLYBDENUM OXIDE, PHASE EQUILIBRIUM

CONTROL MARKING--NO RESTRICTIONS

DOCUMENT CLASS--UNCLASSIFIED

PROXY REEL/FRAME--3002/1275 STEP NO--UR/0020/70/190/005/1101/1102

CIRC ACCESSION NO--AT0128689

UNCLASSIFIED

APPROVED FOR RELEASE: 09/17/2001 CIA-RDP86-00513R002201620006-2"

"APPROVED FOR RELEASE: 09/17/2001 CIA-RDP86-00513R002201620006-2

2/2 019 UNCLASSIFIED

CIRC ACCESSION NO--AT0128689 PROCESSING DATE--27NOV70

ABSTRACT/EXTRACT--(U) GP-0- ABSTRACT. THE PHASE EQUIL. IN THE SYSTEM FORMED BY MO(VI) OXIDE AND K POLYMETAPHOSPHATE WERE STUDIED. K POLYMETAPHOSPHATE IS OBTAINED BY THE DEHYDRATION OF K ORTHOPHOSPHATE AT 450DEGREES FOR A PERIOD OF ONE HR. THE AV. D.P. BY THIS METHOD IS 130 ATMOS OF P PER CHAIN AS DETD. BY POTENTIOMETRIC TITRN. IN A SOLN. OF NAND SUB3. THE CRYSTD. MELT OF (KPO SUB3) SUBN AND MOO SUB3 IS INVESTIGATED BY MEANS OF DTA UP TO 1000DEGREES AT A HEATING RATE OF 3.5 DEGREES-MIN. THE RESULTS INDICATE THE FORMATION OF A COMPD. OF COMPN. KOP SUB3 .MOO SUB3 WITH A M.P. OF 772DEGREES AND HAVING 2 EUTECTICS, AT 676DEGREES (15 MOLAR PERCENT MOO SUB3) AND 603DEGREES (67.5 MOLAR PERCENT MOO SUB3). ANAL. OF THE INDIVIDUAL PHASES AND THE GENERAL PHASE COMPN. IS CONDUCTED BY X RAY DIFFRACTION AND POINTS TO A CUBIC STRUCTURE WITH ALPHA EQUALS 13.50 ANGSTROM. PAPER CHROMATOGRAPHIC STUDIES SHOW THE PRESENCE OF A LARGE AMT. OF THE TETRAMETAPHOSPHATE ANION.

FACILITY: MOSK. GOS. UNIV. IM. LOMONOSOVA, MOSCOW, USSR.

UNCLASSIFIED

APPROVED FOR RELEASE: 09/17/2001 CIA-RDP86-00513R002201620006-2"

"APPROVED FOR RELEASE: 09/17/2001 CIA-RDP86-00513R002201620006-2

Acc. Nr: AP0034207

Abstracting Service: CHEMICAL ABST. 4-70

Ref. Code: UR 0078

71293v Determination of the degree of polymerization of ammonium polyphosphates by a potentiometric titration method. [redacted] Pozharskaya, T. D. (USSR). *Zh. Neorg. Khim.* 1970, 15(1), 13-7 (Russ). The study was made by using a potentiometric titrn. with 0.1N Me_4NOH in 2 atm. NH_3. On increasing the temp. from 300 to 400°, the av. d.p. of $NH_4H_2PO_4$-dehydration product changes from 12 to 56 P atoms in a chain. The shape of the potentiometric curve changed with the length of the polyphosphate chain. The low-mol.-wt. phosphates had two inflection points on the curve while the high-mol.-wt. phosphates had only one inflection point at pH 9. Apparently, in long polyphosphates, the highly charged anion on one end of a long chain does not affect the analogous anion on the other end of this chain.

HMJR

4 7

REEL/FRAME
19710860

APPROVED FOR RELEASE: 09/17/2001 CIA-RDP86-00513R002201620006-2"

"APPROVED FOR RELEASE: 09/17/2001 CIA-RDP86-00513R002201620006-2

Coatings

VADIVASOV, D. G., KUBAYEV, K. YE., CHAYKA, B. I., and LAPKO, P. N., Saratov Institute of Mechanization of Agriculture imeni M. I. Kalinin; Institute of Problems of Material Science, Academy of Sciences Ukrainian SSR

"Effect of Conditions of Plasma Spraying on the Cohesion Strength of Steel Coatings"

Kiev, Poroshkovaya Metallurgiya, No. 9, Sep 70, pp 12-16

Abstract: This paper analyzes the possibility of using plasma spraying to increase the wear resistance and restore the worn surfaces of automotive and tractor parts. The basic factor determining the practical application of sprayed coats is their cohesion strength with the sprayed surface. In this case the cohesion strength of plasma sprayed steel coats was determined as a function of geometric and electric parameters of the process. Use was made of the UPU-3M plasma unit and high-carbon U8A steel. Normalized 45 steel served as the backing material. The cohesion strength of the

APPROVED FOR RELEASE: 09/17/2001 CIA-RDP86-00513R002201620006-2"

"APPROVED FOR RELEASE: 09/17/2001 CIA-RDP86-00513R002201620006-2

USSR

VADIVASOV, D. G., et al, Poroshkovaya Metallurgiya, No. 9, Sep 70, pp 12-16

plasma-sprayed steel coat was tested by the pin method and was found to be 2.5 to 3 times higher than that produced by gas flame and electrometallizing. The recommended optimum conditions for plasma spraying of U8V steel coats are: L=120 mm (spraying distance); I=450 amp, V=30 v, Q=17 l/min, G=0.86 m/min at a 1.8-mm wire diameter.

2/2

APPROVED FOR RELEASE: 09/17/2001 CIA-RDP86-00513R002201620006-2"

"APPROVED FOR RELEASE: 09/17/2001 CIA-RDP86-00513R002201620006-2

USSR

UDC 681.327. 45(088.8)(47)

KUBAYTIS, V. I., MATIYESHKA, S. Yu. et al.

"Puncher Mechanism"

USSR Author's Certificate No. 267191, Filed 3/08/67, Published 3/08/70 (Translated from Referativnyy Zhurnal Avtomatika, Telemekhanika i Vychislitel'naya Tekhnika, No. 4, 1971, Abstract No. 4B470P).

Translation: The mechanism suggested contains a cam drive with an intermediate dog to impart forward and rotary motion to a die and differs in that in order to increase the speed and reliability of punching, rollers contact the forward and return cams, which drive the punches through rocker arms. 1 fig.

1/1

APPROVED FOR RELEASE: 09/17/2001 CIA-RDP86-00513R002201620006-2"

"APPROVED FOR RELEASE: 09/17/2001 CIA-RDP86-00513R002201620006-2

KUBEKOV, B.

COMPUTERS

SO: FOREIGN PRESS DIGEST
31 AUG 71

71. USSR UDC 002.513.5:[illegible]

BALAFANOV, Ya., KACHURINA, O. K., KIRDYASHKIN, A. F., [illegible], [illegible], LYAN, E. N., USTINOV, V. A., TAZHIBAYEV, B. B., TRETYAKOV, V. V., and [illegible], V. V.

"The MS-1 Information Retrieval System"

Tr. In-ta Mat. i Mekh. AN KazSSR (Works of the Institute of Mathematics and Mechanics of the Academy of Sciences, Kazakh SSR), No 1, 1970, pp 293-302 (from R-Zh -- Informatika, No 4, Apr 71, Abstract No 71.4.169 (71R--1250))

Translation: An approach to the creation of a system for collection, storage, and processing of technological information from a controlled process is described. One variant of an information retrieval system is presented. It includes technical resources, the organization of information arrays in computer storage, and a complex of programs for processing information.

1/1

APPROVED FOR RELEASE: 09/17/2001 CIA-RDP86-00513R002201620006-2"

"APPROVED FOR RELEASE: 09/17/2001 CIA-RDP86-00513R002201620006-2

1/2 028 UNCLASSIFIED PROCESSING DATE--13NOV70

TITLE--STRESS STATE AROUND A CIRCULAR CAVITY IN THE DYNAMIC PLANE PROBLEM OF THE MOMENT THEORY OF ELASTICITY -U-

AUTHOR-(02)-KUBENKO, V.D., ZULFUGAROV, A.M.

COUNTRY OF INFO--USSR

K

SOURCE--AKADEMIIA NAUK AZERBAIDZHANSKOI SSR, IZVESTIIA, SERIIA FIZIKO TEKHNICHESKIKH I MATEMATICHESKIKH NAUK, NO. 4, 1969,

DATE PUBLISHED-------69

SUBJECT AREAS--PHYSICS

TOPIC TAGS--STRESS DISTRIBUTION, ELASTICITY THEORY, STRESS CONCENTRATION, HARMONIC OSCILLATION, ACOUSTIC WAVE

CONTROL MARKING--NO RESTRICTIONS

DOCUMENT CLASS--UNCLASSIFIED

PROXY REEL/FRAME--2000/1201 STEP NO--UR/0233/69/000/004/0099/0102

CIRC ACCESSION NO--AP0124855

UNCLASSIFIED

APPROVED FOR RELEASE: 09/17/2001 CIA-RDP86-00513R002201620006-2"

"APPROVED FOR RELEASE: 09/17/2001 CIA-RDP86-00513R002201620006-2

2/2 028 UNCLASSIFIED PROCESSING DATE--13NOV70

CIRC ACCESSION NO--AP0124855

ABSTRACT/EXTRACT--(U) GP-0- ABSTRACT. CALCULATION OF THE STRESSES ARISING AT THE CONTOUR (AND BEYOND) OF A CIRCULAR CYLINDRICAL CAVITY IN AN ELASTIC SPACE DUE TO THE ACTION OF AN INCIDENT PLANE HARMONIC COMPRESSION WAVE. RESULTS OF NUMERICAL CALCULATIONS SHOW THAT AT CERTAIN FREQUENCIES OF THE INCIDENT WAVE, A ZONE OF INCREASED STRESSES ARISES AT A CERTAIN DISTANCE FROM THE CONTOUR; THESE STRESSES APPARENTLY RESULT IN A CLEAVAGE EFFECT.

UNCLASSIFIED

APPROVED FOR RELEASE: 09/17/2001 CIA-RDP86-00513R002201620006-2"

"APPROVED FOR RELEASE: 09/17/2001 CIA-RDP86-00513R002201620006-2

1/2 053 UNCLASSIFIED PROCESSING DATE--20NOV70

TITLE--INTERACTION BETWEEN A SPHERICAL WAVE AND A CYLINDRICAL CIRCULAR SHELL IN AN ACOUSTIC MEDIUM -U-

AUTHOR--KUCHAKO, V.D.

COUNTRY OF INFO--USSR

SOURCE--AKADEMIIA NAUK UKRAINS' KOI RSR, DOPOVIDI, SERIIA A- FIZIKO TEKHNICHNI I MATEMATICHNI NAUKI, VOL. 32, MAR. 1970, P. 251-254.

DATE PUBLISHED----MAR70

SUBJECT AREAS--PHYSICS

TOPIC TAGS--THEORETIC PHYSICS, CYLINDRIC FLOW, CYLINDRIC WAVE, ACOUSTIC ANALYSIS, RADIAL FLOW, FOURIER TRANSFORM, LAPLACE TRANSFORM, MOTION MECHANICS, CYLINDRIC SHELL STRUCTURE

CONTROL MARKING--NO RESTRICTIONS

DOCUMENT CLASS--UNCLASSIFIED

PROXY REEL/FRAME--1996/1649 STEP NO--UR/0441/70/032/000/0251/0254

CIRC ACCESSION NO--AT0118628

UNCLASSIFIED

APPROVED FOR RELEASE: 09/17/2001 CIA-RDP86-00513R002201620006-2"

"APPROVED FOR RELEASE: 09/17/2001 CIA-RDP86-00513R002201620006-2

2/2 053 UNCLASSIFIED PROCESSING DATE--20NOV70

CIRC ACCESSION NO--AT0118628

ABSTRACT/EXTRACT--(U) GP-0- ABSTRACT. ANALYSIS OF THE INTERACTION BETWEEN AN INFINITE CIRCULAR ELASTIC CYLINDER AND A SPHERICAL WAVE WHICH PROPAGATES IN AN ACOUSTIC MEDIUM FROM A CENTER SITUATED AT A GIVEN DISTANCE FROM THE CYLINDER. IT IS ASSUMED THAT THE PROPERTIES OF THE CYLINDER ARE DESCRIBED BY EQUATIONS OF THE VLASOV THEORY OF SHELLS WITH ADDITIONS OF INERTIAL TERMS. EQUATIONS DESCRIBING THE RADIAL DISPLACEMENTS PRODUCED IN THIS CYLINDER BY THE IMPINGING WAVE ARE DERIVED BY APPLYING THE FOURIER AND LAPLACE TRANSFORMS.

FACILITY: AKADEMIIA NAUK UKRAINS'KOI RSR, INSTITUT MEKHANIKI, KIEV, UKRAINIAN SSR.

UNCLASSIFIED

APPROVED FOR RELEASE: 09/17/2001 CIA-RDP86-00513R002201620006-2"

"APPROVED FOR RELEASE: 09/17/2001 CIA-RDP86-00513R002201620006-2

KUBLANOV, L. M.

Public Health

SO: JPRS 54019
9 SEP 71

UDC: 616-073.75:362.12(47-21)

SOME PROBLEMS PERTAINING TO ROENTGENOLOGICAL SERVICES TO THE URBAN POPULATION IN POLYCLINICS

[Article by Ya.G. Vol'finzon, L.M. Kublanov, Chair of Social Hygiene and Public Health Organization (headed by Professor Yu.A. Dobrovol'skiy), Leningrad Institute for the Advanced Training of Physicians (head S.M. Kirov; Moscow, Sovetskoye Zdravookhraneniye, Russian, No 7, 1971, submitted 14 January 1971, pp 48-51]

The roentgenological method of examination occupies a prominent place in the diagnosis of a number of diseases. At the present time about 25 percent of all diagnoses are made with its use (I.G. Lagunova, 1960).

Roentgenology is of inestimable importance in the detection of such diseases as tuberculosis, cancer, and inflammatory processes. Yet its role is more modest with reference to identification of acute respiratory infections, influenza, acute bronchitis, and others. Some clinicians are not sufficiently acquainted with the limitations and capabilities of roentgenology and often refer patients for x-rays when the diagnosis is such that roentgenology does not yield any positive results while the patient is unjustifiably exposed to ionizing radiation. In this connection we cannot help but agree with S.A. Reynberg (1960) that the hazard of the examination should be rationally consistent with the expected benefit, but a single fluoroscopy or x-ray should be given without substantiated indications.

We investigated the justification of referrals of polyclinic patients for x-rays and also analyzed the correlation of clinical diagnoses and roentgenological findings on these patients. This study was pursued at the 22th polyclinic of Frunzenskiy Rayon of Leningrad, which is one of the large polyclinics in the city connected with a hospital. There is a traumatology center at the polyclinic. The x-ray department consists of three diagnostic, a roentgenotherapeutic, and a fluoroscopic examination rooms. It has been the practice of the department to provide for 0.5 posts of roentgenologist. The size of the population serviced by the polyclinic numbers 90,000 people, with 37,000 males (41.1 percent) and 53,000 females (58.9 percent).

APPROVED FOR RELEASE: 09/17/2001 CIA-RDP86-00513R002201620006-2"

"APPROVED FOR RELEASE: 09/17/2001 CIA-RDP86-00513R002201620006-2

6

Therapy

USSR UDC 615.281.8.035.4:616.988.75-053.4-036.8

AKSENOV, V. A., SELIDOVSKIN, D. A., GLADKIKH, G. N., KIBLITSKY, V. S., KUZNETSOVA, O. V., MOLODTSOVA, L. D., BERSENEVA, R. A., AKSENOV, L. A., BOGDANOVA, N. S., and PERSHIN, G. N., All Union Chemico-Pharmaceutical Institute imeni S. Ordzhonikidze, Ministry of Health USSR

"Study of the Prophylactic Value of the New Soviet Antiviral Preparation Oxolin in Preschool Children during the 1969 Influenza Epidemic"

Moscow, Pediatriya, No 5, 1970, pp 18-22

Abstract: The viricidal agent oxolin (tetraoxotetrahydronaphthalene (dihydrate) is effective in the treatment of adenovirus kerato-conjunctivitis, herpetic keratitis, dermatitides of virus etiology, and some acute respiratory diseases. In a double-blind trial, oxolin was administered to 4,170 children one to seven years of age in an unidentified Soviet city during the 1969 influenza epidemic. (It was applied to the nasal mucosa in the form of a 0.25% ointment on a vaseline base twice daily for 40-49 days). Oxolin reduced the incidence of influenza 1.7 times (43%) compared with control children. Severe forms of the disease and complications were 1.1-1.4 times more frequent in the latter than in those who received the preparation, and the course of the disease was 1.2 days longer on the average. The use of oxolin produced side effects in only 0.6% of the cases.

1/1

APPROVED FOR RELEASE: 09/17/2001 CIA-RDP86-00513R002201620006-2"

"APPROVED FOR RELEASE: 09/17/2001 CIA-RDP86-00513R002201620006-2

USSR IDC 577.150.6

TROFIMENKO, N. M., TIKHONOVA, N. P., KUBLITSKAYA, M. A., and KYABTSEVA, N. A.

"Strains of Botrytis cinerea, Pathogens of Gray Mold of Grapes, and Producers of Enzymes of the Pectinase Complex"

Kishinev, Izvestiya Akademii Nauk Moldavskoy SSR, Seriya Biologicheskikh i Khimicheskikh Nauk, No 4, 1971, pp 41-44

Abstract: In connection with a study of gray mold (Botrytis rot) of grapes in the Crimea, five strains of Botrytis cinerea were isolated from infected grapes. These strains differed in morphological, physiological, and biochemical characteristics. Two of the strains isolated (Nos 20 and 30), which infected grapes most frequently, had a high pectinolytic activity. This activity was preserved during artificial cultivation of the fungus on a medium based on sugarbeet pulp. After the culture fluid derived from strains Nos 20 and 30 had been separated by filtration, an enzyme preparation with a high pectinolytic activity was isolated by precipitation with alcohol or ammonium sulfate. The preparation also had some proteolytic activity and expedited the hydrolysis of cellulose. Tests in the winemaking industry indicated that the enzyme preparation, which acted on the skin of grapes, increased the yield of juice (by 2-4%), of tanning

1/2

APPROVED FOR RELEASE: 09/17/2001 CIA-RDP86-00513R002201620006-2"

"APPROVED FOR RELEASE: 09/17/2001 CIA-RDP86-00513R002201620006-2

USSR

TROFIMENKO, N. M., et al., Izvestiya Akademii Nauk Moldavskoy SSR, Seriya Biologicheskikh i Khimicheskikh Nauk, No 4, 1971, pp 41-44

substances and dyes (by 30-50%), and of some other products derived from grapes. The results of the tests showed that enzymes derived from Botrytis cinerea can be used to advantage in the wine-making and grape juice (fruit juice) industries.

2/2

APPROVED FOR RELEASE: 09/17/2001 CIA-RDP86-00513R002201620006-2"

"APPROVED FOR RELEASE: 09/17/2001 CIA-RDP86-00513R002201620006-2

KUBLAY, D. G.

JPRS 55191

15 February 1972

UDC: 576.851.48.097.29

DYNAMICS OF CHANGES IN THE COMPOSITION OF THE ESCHERICHIA IN PERSONS PARTICIPATING IN A MEDICAL-TECHNICAL EXPERIMENT

[Article by M.P. Brazina, [illegible] Anikeyeshva, V.M. Shilov, and D.G. Kublay; Moscow, [illegible], Russian, No 12, 1971, submitted 10 December 1970, pp 23-28]

Use of the Colicinogenicity Test To Study Dynamic Changes of the Escherichia

A cosmonaut's confinement in the hermetically sealed cabin of a space vehicle during a long space flight creates a large number of prerequisites for changes and shifts in the composition of the normal intestinal microflora.

The long effect of such factors as the changed gaseous and chemical composition of the atmosphere. The taking of sublimated products as food and of water [illegible] and condensate, and also the limitation of mobility and the uniformity of stimuli can, as a result of summation of effect, [illegible] shifts in the [illegible] and make further stay in a sealed cabin impossible. Investigation of the composition of the intestinal microflora in them shows that even [illegible] leads to a sharp reduction or disappearance of [illegible] of the intestinal [illegible] -- [illegible], Lactobacillus, and Bacillus [illegible] [illegible] and [illegible], 1969; Lisko, [illegible]). These changes testify to destruction of the normal microbial cenosis, as it is well known that these microorganisms of a healthy intestine play an important role in the processes of vital activity of the macroorganism (protective, vitamin-forming, enzymatic, etc).

[I - USSR - C]

APPROVED FOR RELEASE: 09/17/2001 CIA-RDP86-00513R002201620006-2"

"APPROVED FOR RELEASE: 09/17/2001 CIA-RDP86-00513R002201620006-2

USSR UDC 669-937:669.24 1

SOROKINA, N. A., UL'YANIN, YE. A., TASHCHILOV, V. S., RASTORGUYEVA, I. A., KUBORSKIY, B. N.

"Structure and Properties of Nickel Alloys for Cryogenic Temperatures"

Moscow, Metallovedenive, No 10, 1971, pp 20-23

Abstract: The use of dispersion-hardening alloys based on iron and nickel for operation at cryogenic temperatures was experimentally investigated. The results are discussed by reference to diagrams showing 1) the effect of test temperature on plasticity of the experimental nickel alloys with different iron contents alloyed with 2.5% Nb and 3% Ti, 2) the plasticity and ductility of nickel alloys (18% Cr, 9% Mo, 2.5% Nb) as a function of iron content, 3) the aging kinetics of nickel alloys, and the effect of introduction of Nb on the strength. Nickel alloys containing 1.5% Al and 5-15% Fe were found to meet the required demands of strength, plasticity, ductility, and welding properties. The KhN63M9B2Yu alloy has been developed for welded structures operating at temperatures from -253°C to 750°C. This alloy has

1/2

APPROVED FOR RELEASE: 09/17/2001 CIA-RDP86-00513R002201620006-2"

"APPROVED FOR RELEASE: 09/17/2001 CIA-RDP86-00513R002201620006-2

ROKINA, N. A., et al, Metallovedeniye, No 10, 1971, pp 20-23

sufficiently high resistance to crack development in welding and subsequent heat treatment. 6 illustrations, 1 table, 2 bibliographic references

2/2

APPROVED FOR RELEASE: 09/17/2001 CIA-RDP86-00513R002201620006-2"

"APPROVED FOR RELEASE: 09/17/2001 CIA-RDP86-00513R002201620006-2

USSR UDC 517.9

KOROBEYNIK, YU. F. and KUBRAK, V. K.

"The Existence of Partial Solutions to a Differential Equation of Infinite Order With an Assigned Increase"

Kazan', Izvestiya VUZ, Matematika, No 9, September 1973, pp 36-45

Abstract: This article shows that a differential equation of an infinite order with constant coefficients can, under certain conditions, be reduced to an infinite system of linear differential equations of the first order of magnitude equivalent to it. The basic equation here is:

$$\sum_{n=0}^{\infty} a_n y^{(n)}(z) = f(z). \qquad (1)$$

1/2

APPROVED FOR RELEASE: 09/17/2001 CIA-RDP86-00513R002201620006-2"

"APPROVED FOR RELEASE: 09/17/2001 CIA-RDP86-00513R002201620006-2

USSR

KOROBEYNIK, YU. F., and KUBRAK, V. K., Izvestiya VUZ, Matematika, No 9, Sep 73, pp 36-45

It is assumed here that f(z) in this equation belongs to the class $B_{\varphi,\psi}$ of integral functions g(z) such that $|g(x+iy)| \leq c(g)\exp[\varphi(x)+\psi(y)]$, $-\infty < x, y < \infty$. A partial solution is found to equation (1) in such a class if the right-hand side of the equation also belongs to this class. The authors first find the integral solutions to equation (1) and then the solutions which are analytical in the star-shaped regions. In both instances they give the theorems and proofs to them. The article contains 1 bibliographic reference.

2/2

APPROVED FOR RELEASE: 09/17/2001 CIA-RDP86-00513R002201620006-2"

"APPROVED FOR RELEASE: 09/17/2001 CIA-RDP86-00513R002201620006-2

USSR UDC 512.25/.26+519.3:330.115

KUBRIN, E. Ye., LEBEDEV, B. D., SAVITSKIY, V. Ye., TROITSKAYA, N. A.

"Integer Model of Problem of Transfer of Cargos Using Hourly Schedules"

Vopr. Kibernet. i Vychisl. Mat. [Problems of Cybernetics and Computer Mathematics -- Collection of Works], No 40, Tashkent, 1970, pp 30-38, (Translated from Referativnyy Zhurnal, Kibernetika, No 6, 1971, Abstract No 6 V528 by Yu. Finkel'shteyn).

Translation: Points of consumption ($s = 1, 2, \ldots, S$) are fixed, each of which must be supplied at fixed moments in time $T_1^{(s)}, \ldots, T_{k_s}^{(s)}$ with cargos of predetermined types and quantities. Also fixed are m points of production, each moment $T_p^{(s)}$ corresponding to a subset $I_p^{(s)} \subset I = \{1, \ldots, n\}$ points of production, the specialization of which allows the sth point of consumption to be supplied at the fixed moment in time. The problem is to determine a plan of cargo transfer optimizing a certain criterion of effectiveness. The following model of integer linear programming is produced. Find the number θ_{fij} minimizing $\sum_{j=1}^{n}\sum_{i=1}^{m} \theta_{ij}$ under the conditions

$$\sum_{f=0}^{j-1}\sum_{i \in I_j} \theta_{fij} = 1, \quad j = 1, 2, \ldots, n,$$

APPROVED FOR RELEASE: 09/17/2001 CIA-RDP86-00513R002201620006-2"

"APPROVED FOR RELEASE: 09/17/2001 CIA-RDP86-00513R002201620006-2

USSR

UDC 512.25/.26+519.3:330.115

KUBRIN, E. Ye., LEBEDEV, B. D., SAVITSKIY, V. Ye., TROITSKAYA, N. A., Vopr. Kibernet. i Vychisl. Mat., No 40, Tashkent, 1970, pp 30-38.

$$\sum_{j=0}^{j-1} \sum_{i \in I_j} (T_j + t_{ij}) \theta_{ij} \leq T_j, \quad j=1, 2, \ldots, n,$$

$$\sum_{i=1}^{m} \sum_{j=i+1}^{n} \theta_{ij} \leq 1, \quad i=0, 1, \ldots, n, \quad \theta_{ij} \in \{0, 1\}.$$

An investigation of the model is performed. Important particular cases are indicated, when it is reduced to the transport problem.

2/2

APPROVED FOR RELEASE: 09/17/2001 CIA-RDP86-00513R002201620006-2"

"APPROVED FOR RELEASE: 09/17/2001 CIA-RDP86-00513R002201620006-2

USSR

UDC: 620.178.3:53.082.5

GARF, M. E., KUBYAK, R. F., Kiev

"Use of Fiber Optics for Observation of the Development of Fatigue Cracks"

Kiev, Problemy Prochnosti, No 3, Mar 73, pp 105-107.

Abstract: Methodology and results are presented from a study of the resistance of fiber light guides to variable loads arising during vibration. The possibility is demonstrated of using fiber light guides to study the regularities of fatigue rupture developing in areas not accessible for direct observation or in metal in a nontransparent medium. The investigation of the usability of glass fiber cords vibrating at 25-100 Hz at moderate accelerations showed that they are sufficiently reliable to study the regularities of the process of fatigue rupture. The method developed for observation of fatigue rupture does not require direct illumination of the surface observed or stopping of the test machine.

1/1

APPROVED FOR RELEASE: 09/17/2001 CIA-RDP86-00513R002201620006-2"

"APPROVED FOR RELEASE: 09/17/2001 CIA-RDP86-00513R002201620006-2

1/2 044 UNCLASSIFIED PROCESSING DATE--20NOV70

TITLE--NON CONTACT METHOD OF STUDYING THE PROCESS OF FATIGUE FAILURE -U-

AUTHOR--KUBYAK, R.F.

K.

COUNTRY OF INFO--USSR

SOURCE--ZAVOD. LAB., 1970, 36, (1), 89-91

DATE PUBLISHED--------70

SUBJECT AREAS--MATERIALS, METHODS AND EQUIPMENT

TOPIC TAGS--FATIGUE TEST, NONDESTRUCTUVE TEST, CRACK PROPAGATION, STEEL, FIBER OPTICS

CONTROL MARKING--NO RESTRICTIONS

DOCUMENT CLASS--UNCLASSIFIED

PROXY REEL/FRAME--2000/0239 STEP NO--UR/0032/70/036/001/0089/0091

CIRC ACCESSION NO--APO124001

UNCLASSIFIED

APPROVED FOR RELEASE: 09/17/2001 CIA-RDP86-00513R002201620006-2"

"APPROVED FOR RELEASE: 09/17/2001 CIA-RDP86-00513R002201620006-2

2/2 044 UNCLASSIFIED PROCESSING DATE--20NOV70

CIRC ACCESSION NO--AP0124001

ABSTRACT/EXTRACT--(U) GP-0- ABSTRACT. THE POSSIBILITY OF USING FIBRE OPTICS FOR STUDYING THE PROGRESS OF FATIGUE FAILURE IN INACCESSIBLE PARTS OF STEEL AND OTHER METAL OBJECTS IS DISCUSSED. A NON CONTACT FORM OF APPARATUS FACILITATING THE APPLICATION OF THIS TECHNIQUE IS DESCRIBED. THE KINETICS OF CRACK DEVELOPMENT MAY BE FOLLOWED VISUALLY BY OBSERVING THE IMAGE OF THE AFFECTED PART ON A SCREEN. THE DEVELOPMENT OF FATIGUE FRACTURE MAY BE STUDIED FROM START TO FINISH WITHOUT STOPPING THE MACHINE OF WHICH THE SAMPLE IN QUESTION FORMS A WORKING PART.

UNCLASSIFIED

APPROVED FOR RELEASE: 09/17/2001 CIA-RDP86-00513R002201620006-2"

"APPROVED FOR RELEASE: 09/17/2001 CIA-RDP86-00513R002201620006-2

USSR UDC 621.385.6

AKALOVSKIY, I.V., KORNIYENKO, A.I., KUBYSH, A. YA.

"Formation Of Regular Components Of Noise Spectrum Of Microwave Electrovacuum Devices"

Elektron.tekhnika. Nauch.-tekhn. sb. Elektron.SVCh (Electronics Technology. Scientific-Technical Collection. Microwave Electronics), 1972, Issue 5, pp 120-121 (from RZh:Elektronika i yeye primeneniye, No 11, Nov 1972, Abstract No 11A165)

Translation: One of the possible mechanisms is considered for formation of regular components of the noise spectrum of microwave electrovacuum devices in the low-frequency (to 300 kHz) spectrum connected with the formation of oscillating processes in the power supply. 2 ref. Summary.

1/1

APPROVED FOR RELEASE: 09/17/2001 CIA-RDP86-00513R002201620006-2"

"APPROVED FOR RELEASE: 09/17/2001 CIA-RDP86-00513R002201620006-2

1/2 033 UNCLASSIFIED PROCESSING DATE--11SEP70

TITLE--CHRONOCARDIOMETRY IN CORONARY ATHEROSCLEROSIS AND HYPERTENSIVE DISEASE -U-

AUTHOR--VOROSHILOVA, S.G., KUBYSHKIN, V.F.

COUNTRY OF INFO--USSR

SOURCE--VRACHEBNOYE DELO, 1970, NR 3, PP 107-110

DATE PUBLISHED--------70

SUBJECT AREAS--BIOLOGICAL AND MEDICAL SCIENCES

TOPIC TAGS--ATHEROSCLEROSIS, HYPERTENSION, LUNG, RESPIRATION, MYOCARDIUM, HYPODYNAMIA

CONTROL MARKING--NO RESTRICTIONS

DOCUMENT CLASS--UNCLASSIFIED

PROXY REEL/FRAME--1986/0978 STEP NO--UR/0475/70/000/003/0107/0110

CIRC ACCESSION NO--AP0102917

UNCLASSIFIED

APPROVED FOR RELEASE: 09/17/2001 CIA-RDP86-00513R002201620006-2"

"APPROVED FOR RELEASE: 09/17/2001 CIA-RDP86-00513R002201620006-2

2/2 033 UNCLASSIFIED PROCESSING DATE--11SEP70

CIRC ACCESSION NO--AP0102917

ABSTRACT/EXTRACT--(U) GP-0- ABSTRACT. A CERTAIN PARALLELISM HAS BEEN FOUND IN PATIENTS WITH CORONARY ATHEROSCLEROSIS AND HYPERTENSIVE DISEASE BETWEEN THE EXPRESSION OF CHRONOCARDIOMETRIC SIGNS OF MYOCARDIAL HYPODYNAMIA, DISORDERS OF SYSTOLO DIASTOLIC RATIO OF PULMONARY RHEOGRAPHIC WAVES AND CHANGES OF THE FUNCTION OF EXTERNAL RESPIRATION. MORE DISTINCT DISORDERS OF MYOCARDIAL CONTRACTILITY AND FUNCTION OF EXTERNAL RESPIRATION WERE SEEN IN PATIENTS WITH MYOCARDIAL ISCHEMIA. IT IS EMPHASIZED THAT AT CERTAIN STAGES THE FUNCTIONAL EXERTION OF COMPENSATION MECHANISMS OF CARDIAC INSUFFICIENCY PROVES EFFICIENT, EVIDENCED BY THE ABSENCE OF CLINICAL SIGNS OF CIRCULATORY DISORDERS.

UNCLASSIFIED

APPROVED FOR RELEASE: 09/17/2001 CIA-RDP86-00513R002201620006-2"

"APPROVED FOR RELEASE: 09/17/2001 CIA-RDP86-00513R002201620006-2

USSR

UDC 536.46:533.6

ARTYUKH, L. Yu., ZAKARIN, E. A., KUBYSHKINA, V. D.

"Plane Laminar Jet of a Fuel-Gas Mixture"

V sb. Prikl. i teor. fizika (Applied and Theoretical Physics -- Collection of Works), No. 3, Alma-Ata, 1972, pp 207-212 (from RZh-Mekhanika, No 3, Mar 73, Abstract No 3B944)

Translation: A theoretical study of a previously mixed fuel mixture of gases entering a satellite inert flow is described. The mathematical model of the process is a set of equations of the reacting boundary layer. A computer solution is given. Direct and inverse Bunsen burners were obtained. The results are in good agreement with experimental data. It is shown that the distribution of temperature, velocity concentrations and combustion along the line of the flow lies on a universal curve if the coordinate origin is placed at the point of maximum reaction velocity. Fields of isotherms and lines of flow are given. 7 ref. Authors' abstract.

1/1

APPROVED FOR RELEASE: 09/17/2001 CIA-RDP86-00513R002201620006-2"

"APPROVED FOR RELEASE: 09/17/2001 CIA-RDP86-00513R002201620006-2

USSR UDC 615.28.033.2

KUCHAK, Yu. A., Institute of Hygiene and Toxicology of Pesticides, Polymers, and Plastics, Kiev

"Determination of Retention of Pesticides in the Respiratory Organs of Test Animals"

Moscow, Gigiyena Truda i Professional'nyye Zabolevaniya, No 8, Aug 71, pp 57-58

Abstract: The common method of calculating the amount of pesticide aerosols or vapors absorbed by the respiratory organs is based on considerations of the size of pesticide particles, physicochemical properties of the pesticide, and the pulmonary ventilation volume. To make the determinations more exact, an instrument was built by means of which the concentration of the pesticide in inhaled and exhaled air is measured, and the amount absorbed is calculated from the concentration difference and the volume of air exchanged. The instrument draws room air through a pesticide reservoir, and guides it into a distributor. From here, one tube conducts the air-pesticide mixture into a system measuring the pesticide concentration in the inhaled air. A second tube conducts the mixture into a mask placed over the experimental animal's head. A one-way valve guides the exhaled air into a system measuring the pesticide

1/2

APPROVED FOR RELEASE: 09/17/2001 CIA-RDP86-00513R002201620006-2"

"APPROVED FOR RELEASE: 09/17/2001 CIA-RDP86-00513R002201620006-2

USSR

KUCHAK, Yu. A., Gigiyena Truda i Professional'nyye Zabolevaniya, No 8, Aug 71, pp 57-58

concentration in the exhaled air. By means of a control knob, the respiratory rate can be preset at 30 to 60 breaths per minute, and the animal soon adjusts its breathing to the rhythm of the motor. While the theoretical calculation indicated that 75% of P^{32} was absorbed during inhalation of an aerosol of this radioactive isotope with a droplet size of 5 microns, the actual measurement yielded a value of 1-2%.

2/2

APPROVED FOR RELEASE: 09/17/2001 CIA-RDP86-00513R002201620006-2"

"APPROVED FOR RELEASE: 09/17/2001 CIA-RDP86-00513R002201620006-2

USSR

UDC 616-018.1-099.07

KUCHAK, Yu. A., Candidate of Medical Sciences, All Union Scientific Research Institute of Hygiene and Toxicology of Pesticides, Polymers, and Plastics, Kiev

"A Device to Measure Tissue Impedance in Animals Treated With a Toxic Agent"

Moscow, Gigiyena i Sanitariya, No 7, 1971, pp 78-81

Translation: Changes in the vitality of cells in different organs and tissues following exposure to pesticides can be assessed by comparing electrical conductivity for a low- or high-frequency current. The differences in electric conductivity between dead and living tissues are so great that their activity can be determined quantitatively.

The resistance encountered by direct or low-frequency alternating current as it passes through living tissues consists of resistance caused by the physicochemical properties of the tissue fluid electrolyte and a reactive component that results

1/10

APPROVED FOR RELEASE: 09/17/2001 CIA-RDP86-00513R002201620006-2"

"APPROVED FOR RELEASE: 09/17/2001 CIA-RDP86-00513R002201620006-2

USSR

KUCHAK, Yu. A., Gigiyena i Sanitariya, No 7, 1971, pp 78-81

from the polarization of the cell membranes and electrodes. The total active (R) and reactive (Xc) resistance is called the total tissue impedance and it can be expressed by the following formula (M. Derkach):

$$Z = \sqrt{R^2 + Xc^2}$$

According to B. M. Tarusova, N. Ye. Didenko, Ye. V. Burlakova, M. Derkach, and R. Steisi, the reactive component of tissue impedance is an indicator of the physiological state of cells. Reactive resistance may be due to polarization of the cell membranes, i.e., the distribution of ions with opposite charges on both sides of the membrane. Some of the intracellular energy liberated by the oxidation-reduction processes is expended on the mechanism of membrane polarization. The process of membrane polarization can naturally be completely supplied with energy only in normally active cells. A variety of toxic agents,

2/10

APPROVED FOR RELEASE: 09/17/2001 CIA-RDP86-00513R002201620006-2"

"APPROVED FOR RELEASE: 09/17/2001 CIA-RDP86-00513R002201620006-2

USSR

KUCHAK, Yu. A., Gigiyena i Sanitariya, No 7, 1971, pp 78-81

especially toxic chemicals, can impair the cellular metabolism and decrease the intracellular energy balance and reactive component of the total tissue impedance. Thus, the degree of cell viability can be assessed from changes recorded in the process of membrane polarization.

The polarization of cell membranes is linked to the frequency of the current passing through the tissue. The lower the frequency, the more pronounced the polarization. However, at high frequencies the distribution of ions on both sides of the membrane cannot keep up with the fluctuations in the current. Therefore, the reactive resistance of tissues is virtually nonexistent at these frequencies and only the ohmic component of the complex resistance is recorded.

Impairment of cell viability can be evaluated quantitatively from the polarization coefficient (B. M. Tarusov). The polarization coefficient (N) is the ratio of tissue resistance to a

3/10

APPROVED FOR RELEASE: 09/17/2001 CIA-RDP86-00513R002201620006-2"

"APPROVED FOR RELEASE: 09/17/2001 CIA-RDP86-00513R002201620006-2

USSR

KUCHAK, Yu. A., Gigiyena i Sanitariya, No 7, 1971, pp 78-81

low-frequency current ($R10^4$) to resistance to a high-frequency current ($R10^8$):

$$N = \frac{R10^4}{R10^8}$$

Identical or close impedance values for both frequencies is an indication of decreased cell viability.

The use of a bridge circuit to measure electric conductivity presents some difficulties in balancing the resistor and capacitor box as well as in adjusting the oscillograph and amplifier. We therefore used the simpler and highly sensitive null method of measuring the ohmic resistance of tissues.

To obtain stable measurements of tissue impedance in an experiment, it is necessary to take into account all the factors that

4/10

APPROVED FOR RELEASE: 09/17/2001 CIA-RDP86-00513R002201620006-2"

"APPROVED FOR RELEASE: 09/17/2001 CIA-RDP86-00513R002201620006-2

USSR

KUCHAK, Yu. A., Gigiyena i Sanitariya, No 7, 1971, pp 78-81

influence electrical conductivity. These include the size and geometric shape of the electrode, distance between the electrodes and depth to which they are implanted in the tissues, stability of the frequency and specific current density, stability of the temperature of the tissue under study, and so forth. In passing through an organ, the current should not cause irreversible changes or significantly alter its properties. Hence it is necessary to suppress the prethreshold current density and take the measurements as quickly as possible (W. Bayer). Electrode resistance should be minimal and the bridging pathways reduced as much as possible. The contact of the object with the electrode should be motionless during the measurements. Meeting these conditions guarantees the objectivity of the information obtained.

To determine tissue impedance in warm-blooded animals, we used an apparatus consisting of two transistorized AC oscillators at different frequencies (10 kHz and 9 megaHz), measuring device, thermostatic cell, and electrodes. The circuits of the

5/10

APPROVED FOR RELEASE: 09/17/2001 CIA-RDP86-00513R002201620006-2"

"APPROVED FOR RELEASE: 09/17/2001 CIA-RDP86-00513R002201620006-2

USSR

KUCHAK, Yu. A., Gigiyena i Sanitariya, No 7, 1971, pp 78-81

oscillators are independent and battery-powered. The signals of the oscillators are sinusoidal. Output variable resistance (0.6 v) is regulated by a potentiometer connected to the power supply of the oscillators.

The resistance of the biological substrate is balanced by a calibrated variable resistance which sets the measuring device (oscillograph or mirror galvanometer) connected to the circuit at zero. The reading of the standard resistance corresponds to the impedance of the portion of tissue measured.

The measuring cell consists of a microthermostat (MT-03) that automatically maintains the water bath at a stable temperature (37°C). A beaker with mineral oil (50 ml) is placed in the water bath after which two platinum electrodes 5 mm long and 0.5 mm in cross section are lowered into the oil at a distance of 15 mm from each other. The electrodes are fused into a

6/10

APPROVED FOR RELEASE: 09/17/2001 CIA-RDP86-00513R002201620006-2"

"APPROVED FOR RELEASE: 09/17/2001 CIA-RDP86-00513R002201620006-2

USSR

KUCHAK, Yu. A., Gigiyena i Sanitariya, No 7, 1971, pp 78-81

plexiglass plate. They are arranged parallel to the surface of the oil and they can be shifted vertically on the stand.

For in vitro tests, material is placed in separate test tubes with Ringer's solution and at a prescribed concentration of the toxic chemical. The control tissues and organs are placed only in Ringer's solution. The test tubes are placed in a water bath at 37°C for one hour. Then the organ or tissue is rinsed with distilled water and dried on filter paper, put on the electrodes and with the help of the rack, immersed in the mineral oil (at 37°C), after which the tissue impedance is measured.

The second variation of the study differs from the first in only one respect, i.e., the animal is sacrificed after receiving a certain dose of the toxic chemical, after which the tissues and organs are used in the experiment.

Measurements can also be made in a chronic experiment with a live object and electrodes implanted in the organ of interest. However, this variation entails considerable technical difficulties.

7/10

APPROVED FOR RELEASE: 09/17/2001 CIA-RDP86-00513R002201620006-2"

"APPROVED FOR RELEASE: 09/17/2001 CIA-RDP86-00513R002201620006-2

USSR

KUCHAK, Yu. A., Gigiyena i Sanitariya, No 7, 1971, pp 78-81

The proposed method of measuring tissue and organ impedance can yield information on changes in the biophysical structure of live tissues after exposure to a pesticide and on the selective toxic action of a substance on various organs and tissues. It is possible to determine the relationship between the dose and duration of exposure of the organ to the chemical compound, on one hand, and changes in the intracellular energy processes, on the other.

The quantitative expression of tissue electrical conductivity and therefore the degree of cell viability can be mathematically analyzed.

The results of studies on the degree of viability of rat organs in relation to the effect of thermal and chemical factors have been tabulated. Five groups of rats, nine animals in each, were

8/10

APPROVED FOR RELEASE: 09/17/2001 CIA-RDP86-00513R002201620006-2"

"APPROVED FOR RELEASE: 09/17/2001 CIA-RDP86-00513R002201620006-2

USSR

KUCHAK, Yu. A., Gigiyena i Sanitariya, No 7, 1971, pp 78-81

used in the experiment and their liver, kidneys, heart, muscles, brain, and lungs were removed immediately after they were sacrificed. Three series of organs were kept in Ringer's solution for 15 minutes at 37, 56, or 87°C. A fourth series of organs was kept for 30 minutes at the optimum temperature (37°C) in a mixed medium of Ringer's solution and a 0.01% solution of the insecticide rogor. The control series was kept for 30 minutes in Ringer's solution at 37°C. The experiments were repeated twice under identical conditions.

The coefficients of polarization of the cell membranes in all the organs exposed to the thermal factor (56 and 87°C) decreased in relation to changes in the reactive constituent of general tissue impedance as a low-frequency current was passed through the tissue. The active resistance of the organs to a high-frequency current did not change significantly.

Rogor exerted selective action only against the liver, kidneys, and heart. The decrease in coefficients of polarization of the other organs (lungs, brain, muscle) was insignificant.

9/10

APPROVED FOR RELEASE: 09/17/2001 CIA-RDP86-00513R002201620006-2"

"APPROVED FOR RELEASE: 09/17/2001 CIA-RDP86-00513R002201620006-2

USSR

KUCHAK, Yu. A., Gigiyena i Sanitariya, No 7, 1971, pp 78-81

Our preliminary experiments to determine organ impedance following exposure to insecticides show that this is a promising method for studying the toxicodynamics of toxic chemicals.

10/10

APPROVED FOR RELEASE: 09/17/2001 CIA-RDP86-00513R002201620006-2"

"APPROVED FOR RELEASE: 09/17/2001 CIA-RDP86-00513R002201620006-2

Electrochemistry

USSR UDC 541.13

PIS'MEN, L. M., KUCHANOV, S. I., VOL'FKOVICH, Yu. M., GORYACHEV, R. G., and BOGOTSKIY, V. S., Institute of Electrochemistry, Academy of Sciences USSR, Moscow

"Large Scale Macrokinetics of a Hydrogen-Oxygen Fuel Cell With a Capillary Membrane"

Moscow, Elektrokhimiya, Vol 9, No 9, Sep 73, pp 1262-1271

Abstract: Mass exchange calculations are reported for a hydrogen-oxygen fuel cell with a capillary membrane, considering the diffusion of ions and water in the liquid state, diffusion of gasses and vapor, filtration stream of the solution, convectional stream of the gasseous mixture, ion migration, stoichiometry and microkinetics of the anode and cathode reactions. The functions of the cell in respect to the basic construction and regimen parameters have been calculated.

1/1

APPROVED FOR RELEASE: 09/17/2001 CIA-RDP86-00513R002201620006-2"

"APPROVED FOR RELEASE: 09/17/2001 CIA-RDP86-00513R002201620006-2

USSR UDC: 669.891.053.2

PUTILIN, Yu. M., ROMANOVA, A. D., BAZAROVA, S. I., KUCHANSKAYA, O. F., SHIGANOVA, G. A.

"The Interaction of Fluorite with Aluminum Oxide with Heating"

Tekhnol. Mineral'n. Syr'ya [Technology of Mineral Raw Materials -- Collection of Works], Alma-Ata, 1972, pp 135-144 (Translated from Referativnyy Zhurnal Metallurgiya, No 8, 1973, Abstract No 8G197, by G. Svodtseva).

Translation: The interaction of CaF_2 with Al_2O_3 was studied as they were heated in a vacuum (residual pressure about 0.1 mm hg) and in air in the 900-1300° temperature interval. The charge was made by a double decomposition reaction. In the 1200-1300° temperature interval, CaF_2 partially sublimates and simultaneously interacts with Al_2O_3 in an exchange reaction. The CaO liberated in this process forms Ca dialuminate with Al_2O_3. As the temperature is increased to 1200°, the quantity of dialuminate increases to 50%. A new compound appears, $5CaO \cdot 3Al_2O_3$. As the CaF_2 is heated with Al_2O_3 in air to 900-1100°, pyrolysis of CaF_2 occurs. At 1200° and higher, sublimation and

1/2

APPROVED FOR RELEASE: 09/17/2001 CIA-RDP86-00513R002201620006-2"

"APPROVED FOR RELEASE: 09/17/2001 CIA-RDP86-00513R002201620006-2

USSR

Putilin, Yu. M., Romanova, A. D., Bazarova, S. I., Kuchanskaya, O. F., Shiganova, G. A., Tekhnol. Mineral'n. Syr'ya, Alma-Ata, 1972, pp 135-144.

an exchange reaction between CaF_2 and Al_2O_3 are observed. The AlF_3 formed is hydrolyzed by water vapor in the air. The products of the secondary interaction of CaO and Al_2O_3 are: up to 1200° -- $CaO \cdot 2Al_2O_3$, over 1200° -- $5CaO \cdot 3Al_2O_3$. 4 tables, 6 biblio. refs.

2/2

APPROVED FOR RELEASE: 09/17/2001 CIA-RDP86-00513R002201620006-2"

"APPROVED FOR RELEASE: 09/17/2001 CIA-RDP86-00513R002201620006-2

USSR UDC 542.91:547.455.547.1'118

SHIBAYEV, V. N., KUSOV, YU. YU., ~~KUCHAR, SH.~~, and KOCHETKOV, N. K., Institute of Organic Chemistry imeni N. D. Zelinskiy, Academy of Sciences USSR

"The Chemistry of Glycosyl Phosphates and Their Derivatives. Communication 2. The Synthesis of Deoxyglycosyl Phosphate Derivatives of 6-, 4-, and 3-Deoxy-D-Glucose"

Moscow, Izvestiya Akademii Nauk SSSR, Seriya Khimicheskaya, No 2, 1973, pp 430-434

Abstract: Synthesis of deoxyglycosyl phosphate derivatives of 6-, 4-, and 3-deoxy-D-glucose was achieved through fusion of the β-acetates of deoxysugars with anhydrous H_3PO_4. Acetylation of deoxysugars was attained with Ac_2O in the presence of AcONa (100°, 2 h), and subsequent phosphorylation of the resultant β-tetra-acetates was performed with an 8-fold excess of H_3PO_4 under vacuum at 50°. Deacetylation of the products with 1 N LiOH resulted in practically complete removal of inorganic phosphate as the lithium

1/3

APPROVED FOR RELEASE: 09/17/2001 CIA-RDP86-00513R002201620006-2"

"APPROVED FOR RELEASE: 09/17/2001 CIA-RDP86-00513R002201620006-2

USSR

SHIBAYEV, V. N., et al., Izvestiya Akademii Nauk SSSR, Seriya Khimicheskaya, No 2, 1973, pp 430-434

salt. The resultant α- and β-anomers of the deoxyglycosylphosphates were resolved by chromatography on a Dowex-1x8 (HCO_3^-) column, by elution with a linear gradient of triethylammonium bicarbonate (pH 7.5). In this manner, the respective triethylammonium salts of 3-deoxy-α-D-ribohexopyranosyl phosphate (I), 3-deoxy-β-D-ribohexopyranosyl phosphate (II), 4-deoxy-α-D-xylohexopyranosyl phosphate (III), 4-deoxy-β-D-xylohexopyranosyl phosphate (IV), 6-deoxy-α-D-glucopyranosyl phosphate (V), 6-deoxy-β-D-glucopyranosyl phosphate (VI), α-D-glucopyranosyl phosphate (VII), and β-D-glucopyranosyl phosphate (VIII) were synthesized from the corresponding β-tetraacetates (I and II from 1,2,4,6-tetra-O-acetyl-3-deoxy-β-D-ribohexopyranose, III and IV from 1,2,3,6-tetra-O-acetyl-4-deoxy-β-D-xylohexopyranose, V and VI from 1,2,3,4-tetra-O-acetyl-6-deoxy-β-D-glucopyranose), and VII and VIII from 1,2,3,4,6-penta-O-acetyl-β-D-glucopyranose. The average yield of the deoxyglycosyl phosphates ranged from 35-40%, and formation of the α-anomer predominated under these conditions of phosphorylation. In the case of the D-glucopyranosyl

APPROVED FOR RELEASE: 09/17/2001 CIA-RDP86-00513R002201620006-2"

"APPROVED FOR RELEASE: 09/17/2001 CIA-RDP86-00513R002201620006-2

USSR

SHIBAYEV, V. N., et al., Izvestiya Akademii Nauk SSSR, Seriya Khimicheskaya, No 2, 1973, pp 430-434

phosphates the ratios of α- and β-anomer were reversed, apparently due to the shorter phosphorylation times. Optical rotatory dispersion data and $[\alpha]_D$ values were used to evaluate the configurations about C-1. Mobilities on paper electrophoresis were identical for the deoxyglycosyl phosphates and the α-D-glucopyranosyl phosphate (paper M, Leningrad Factory No. 2, 20-25 V/cm, 1 hr, 0.05 M triethylammonium bicarbonate buffer, pH 7.5), while the former showed greater mobilities on paper chromatography in two solvent systems.

3/3

APPROVED FOR RELEASE: 09/17/2001 CIA-RDP86-00513R002201620006-2"

"APPROVED FOR RELEASE: 09/17/2001 CIA-RDP86-00513R002201620006-2

ACC. NR. AT0047485

Abstracting Service: 4-70
CHEMICAL ABST.

REF. CODE
GE 0000

KUCHATOVA S.N.

87470m Characteristics and methods for study of bacterial filters in the zone of petroleum and natural gas deposits. Mogilevskii, G. A.; Bogdanova, V. M.; Kuchatova, S. N.; Slavina, G. P.; Telegina, Z. P.; Filipova, A. A.; Cherkinskava, B.S. (VNIIJAGG, Moscow, USSR). Vortr. Geochem. Chem.-Phys. Probl. Erdoel-Erdgas-Erkundung-Foerder., Int. Wiss. Konf., 5th 1967 (Pub 1968), 1, 475-525 (Ger.) Edited by Mueller, Erich P. VEB Deut. Verlag Grundstoffind.: Leipzig, Ger. In establishing criteria for biochem. investigations of natural gas deposits these points should be considered: (1) the characteristics of the gas and bacteria in the upper sedimentary layers and possible mechanisms of hydrocarbon formation, (2) characteristics of gas forming and liq.-hydrocarbon forming bacteria, (3) the amt. of hydrocarbon gases absorbed by the microflora and (4) influence of radioactivity on the vitality of hydrocarbon metabolizing flora. A correlation was established between the hydrocarbon gases and the microflora within the rock formations and waters within a producing area. K. W. Strom

1/1

REEL/FRAME
19791044

APPROVED FOR RELEASE: 09/17/2001 CIA-RDP86-00513R002201620006-2"

"APPROVED FOR RELEASE: 09/17/2001 CIA-RDP86-00513R002201620006-2

1/2 013 UNCLASSIFIED PROCESSING DATE--20NOV70

TITLE--INOCULANT FOR CAST IRON -U-

AUTHOR-(03)-LUZAN, P.P., SHUMIKHIN, V.S., KUCHEMASOV, YU.S.

COUNTRY OF INFO--USSR

SOURCE--U.S.S.R. 263,616

REFERENCE--OTKRYTIYA, IZOBRET., PROM. OBRAZTSY, TOVARNYE ZNAKI 1970,

DATE PUBLISHED--10FEB70

SUBJECT AREAS--MATERIALS

TOPIC TAGS--CHEMICAL PATENT, CAST IRON, CALCIUM COMPOUND, SILICON COMPOUND, CHROMIUM COMPOUND

CONTROL MARKING--NO RESTRICTIONS

DOCUMENT CLASS--UNCLASSIFIED

PROXY REEL/FRAME--3004/1823 STEP NO--UR/0482/70/000/000/0000/0000

CIRC ACCESSION NO--AA0132058

UNCLASSIFIED

APPROVED FOR RELEASE: 09/17/2001 CIA-RDP86-00513R002201620006-2"

"APPROVED FOR RELEASE: 09/17/2001 CIA-RDP86-00513R002201620006-2

2/2 013 UNCLASSIFIED PROCESSING DATE--20NOV70

CIRC ACCESSION NO--AA0132088

ABSTRACT/EXTRACT--(U) GP-0- ABSTRACT. A CAST IRON INOCULANT CONTAINS A FERROCHROMIUM (70PERCENT) BASE AND 30-40PERCENT SILICOCALCIUM (28PERCENT) TO REMOVE CEMENTITE IN THE CAST MATERIAL. FACILITY: INSTITUT PROBLEM LIT'YA AN UKRAINSKOY SSR.

UNCLASSIFIED

APPROVED FOR RELEASE: 09/17/2001 CIA-RDP86-00513R002201620006-2"

"APPROVED FOR RELEASE: 09/17/2001 CIA-RDP86-00513R002201620006-2

Nuclear Physics

USSR

BELOV, A. G., GANGRSKIY, Yu. P., DALKHSUREN, B., KUCHER, A. M., NGUYEN, Kong Khan', Joint Institute of Nuclear Research

"Search for α-Emission in Decay of Spontaneously Fissioning Isomers"

Moscow, Yadernaya Fizika, Vol 17, No 5, May 73, pp 942-946

Abstract: The paper gives the results of experiments to detect α-emission in decay of spontaneously fissioning isomers of Am^{242} ($T_{1/2}$ = 14 μs), Am^{240} (0.9 ms) and Pu^{241} (27 μs) formed in reactions (n,2n) with a cross section of 100-200 μb at a neutron energy of 14.7 MeV, which is considerably greater than the cross sections of reactions with charged particles. The α-particles were registered by a multifilament proportional counter 120 mm in diameter with a resolving time of about 0.1 μs. No alpha-emitters were observed with energy greater than 7 Mev and half-life in the region of 10^{-5}-10^{-2}sec. This would seem to indicate that α-transitions from isomer levels are forbidden. The authors thank G. N. Flerov for continued interest in the work.

1/1

APPROVED FOR RELEASE: 09/17/2001 CIA-RDP86-00513R002201620006-2"

"APPROVED FOR RELEASE: 09/17/2001 CIA-RDP86-00513R002201620006-2

Polymers and Polymerization

USSR UDC 541.15

KUCHER, A. N., PENIONZHKEVICH, YU. E., and FLEROV, N. G.

"Some Characteristics of the Production and Yield of F^{18} From Fluoroplast Under γ - and Neutron Irradiation."

Moscow, Khimiya, Vysokikh Energiy, Vol 7, No 4, Jul-Aug 73, pp 362-366

Abstract: The formation and yield of fluorine and its compounds from fluoroplast has been investigated as a function of various parameters (temperature, surrounding medium, thickness of the fluoroplast samples, etc) under the influence of neutron and γ-quanta streams (10^{10} particles per $cm^2 \cdot sec$). Free fluorine was determined by means of the activation analysis using the radioactive isotope fluorine^{18}. The results obtained make it possible to use extrapolative techniques in determining the yield of various fluorine containing products from fluoroplast and to reach some conclusions on the mechanism of the reactions occurring in the polymers under nuclear irradiation.

1/1

APPROVED FOR RELEASE: 09/17/2001 CIA-RDP86-00513R002201620006-2"

"APPROVED FOR RELEASE: 09/17/2001 CIA-RDP86-00513R002201620006-2

1/2 016 UNCLASSIFIED PROCESSING DATE--20NOV70

TITLE--LIQUID PHASE OXIDATION OF HYDROCARBONS -U-

AUTHOR--KUCHER, R.V.

K

COUNTRY OF INFO--USSR

SOURCE--VISN. AKAD. NAUK UKR. RSR 1970, (2), 56-64

DATE PUBLISHED--------70

SUBJECT AREAS--CHEMISTRY

TOPIC TAGS--OXIDATION, ALKENE, PEROXIDE, EPOXIDE, BUTENE, NONENE, ALDEHYDE, ARYL RADICAL, ALKANE

CONTROL MARKING--NO RESTRICTIONS

DOCUMENT CLASS--UNCLASSIFIED

PROXY REEL/FRAME--2000/1723 STEP NO--UR/0655/70/000/002/0056/0064

CIRC ACCESSION NO--AP0125344

UNCLASSIFIED

APPROVED FOR RELEASE: 09/17/2001 CIA-RDP86-00513R002201620006-2"

"APPROVED FOR RELEASE: 09/17/2001 CIA-RDP86-00513R002201620006-2

2/2 016 UNCLASSIFIED PROCESSING DATE--20NOV70

CIRC ACCESSION NO--AP0125344

ABSTRACT/EXTRACT--(U) GP-0- ABSTRACT. BASIC PRODUCTS OF LIQ. PHASE OXIDN. OF ALKENES BY AIR ARE FORMED IN TRANSFORMATION REACTIONS OF ALKENE PEROXIDE RADICALS. THE FORMATION OF ALDEHYDES PLAYS AN IMPORTANT ROLE, BECAUSE THEIR OXIDN. PRODUCTS, NAMELY ACYL PEROXIDE RADICALS, TAKE PART IN THE EPOXIDN. OF ALKENES. THIS WAS CORROBORATED BY CALCG. THE RELATIVE RATES OF ACCUMULATION OF VARIOUS FINAL OXIDN. PRODUCTS OF 1 BUTENE. THE PCLE OF ALDEHYDES IS STILL MORE IMPORTANT IN THE EPOXIDN. OF 2 BUTENE. THE RATE OF THE INITIATION OF THE OXIDN. BY BETA NAPHTHOL., AT 100-10DEGREES, INCREASES IN THE ORDER 1 BUTENT LESS THAN 2 BUTENE LESS THAN 2 NONENE, THE ACTIVATION ENERGY OF THE INITIATION BEING 39.3, 38.0, AND 28.5 KCAL-MOLE, RESP. THE REPLACEMENT OF BETA NAPHTHOL BY ACH AT 100DEGREES INCREASES THE INITIATION RATE OF THE 1 BUTENE OXIDN. 2500 TIMES. THE RATE DETG. STEPS IN THE OXIDN. OF 1 NONENE IN THE PRESENCE OF CROTONALDEHYDE ARE THE FORMATION OF CROTONALDEHYDE AND CROTONYL PEROXIDE RADICALS, AND THE TRANSFORMATION OF THE PEROXIDE RADICAL TO INACTIVE PRODUCTS. THE ORDER OF THE REACTION WITH RESPECT TO CROTONALDEHYDE IS 1.5. THE REACTIVITY OF ARYL DERIVATIVES OF ALKANES DECREASES IN THE ORDER PH SUB3 CH IS GREATER THAN L,L, PH SUB2 CHME IS GREATER THAN PH SUB2 CH SUB2 ISO PRPH IS GREATER THAN ETPH IS GREATER THAN EMPH. THE REACTIVITY OF PEROXIDE RADICALS DECREASES IN THE ORDER PHCH SUB2 COO IS GREATER THAN PH SUB2 CHOO IS GREATER THAN PH SUB2 ME COO IS GREATER THAN PHMECHOO IS GREATER THAN PHME SUB2 COO. THE REACTIVITY IS AFFECTED BY POLAR, STERIC, AND (MOST IMPORTANT) CONJUGATION EFFECTS.

UNCLASSIFIED

APPROVED FOR RELEASE: 09/17/2001 CIA-RDP86-00513R002201620006-2"

"APPROVED FOR RELEASE: 09/17/2001 CIA-RDP86-00513R002201620006-2

1/2 023 UNCLASSIFIED PROCESSING DATE--23OCT70

TITLE--CORRELATION OF FREE ENERGIES OF DISSOCIATION OF ACTIVATED BONDS WITH FREE ENERGIES OF DISSOCIATION OF THE BONDS OF INITIAL REAGENTS FOR

AUTHOR-(02)-TUROVSKIY, A.A., KUCHER, R.V.

K

COUNTRY OF INFO--USSR

SOURCE--ZH. FIZ. KHIM. 1970, 44(1), 221-3

DATE PUBLISHED-------70

SUBJECT AREAS--CHEMISTRY

TOPIC TAGS--CHEMICAL BONDING, CHEMICAL REACTION KINETICS, CHEMICAL DECOMPOSITION, GAS, FREE ENERGY

CONTROL MARKING--NO RESTRICTIONS

DOCUMENT CLASS--UNCLASSIFIED

PROXY REEL/FRAME--1984/1261 STEP NO--UR/0076/70/044/001/0221/0223

CIRC ACCESSION NO--AP0055932

UNCLASSIFIED

APPROVED FOR RELEASE: 09/17/2001 CIA-RDP86-00513R002201620006-2"

"APPROVED FOR RELEASE: 09/17/2001 CIA-RDP86-00513R002201620006-2

2/2 023 UNCLASSIFIED PROCESSING DATE--23OCT70

CIRC ACCESSION NO--AP0055932

ABSTRACT/EXTRACT--(U) GP-0- ABSTRACT. A LINEAR CORRELATION WAS FOUND BETWEEN THE FREE ENERGIES OF ACTIVATED BOND DISSOCN. IN THE TRANSIENT STATE AND THE FREE ENERGIES OF BOND DISSOCN. IN THE INITIAL STATE AS A RESULT OF AN ANAL. OF THE KINETICS FOR MONOMOL. DECOMPN. REACTIONS IN THE GAS PHASE. AN ANALOGOUS CORRELATION WAS ESTD. FOR MONOMOL. DECOMPN. REACTIONS GIVING RISE TO SATD. MOLS. (REACTION PRODUCTS).

UNCLASSIFIED

APPROVED FOR RELEASE: 09/17/2001 CIA-RDP86-00513R002201620006-2"

"APPROVED FOR RELEASE: 09/17/2001 CIA-RDP86-00513R002201620006-2

1/2 015 UNCLASSIFIED PROCESSING DATE--23OCT70

TITLE--THERMAL DECOMPOSITION OF M-DIISOPROPYLBENZENE HYDROPEROXIDES -U-

AUTHOR-(02)-IVANENKO, P.F., KUCHER, R.V.

R

COUNTRY OF INFO--USSR

SOURCE--UKR. KHIM. ZH. 1970, 36(2), 178-80

DATE PUBLISHED--------70

SUBJECT AREAS--CHEMISTRY

TOPIC TAGS--THERMAL DECOMPOSITION, ISOPROPYL BENZENE, HYDROPEROXIDE, PYROCATECHOL, NAPHTHOL, CHEMICAL REACTION MECHANISM

CONTROL MARKING--NO RESTRICTIONS

DOCUMENT CLASS--UNCLASSIFIED

PROXY REEL/FRAME--1999/1967 STEP NO--UR/0073/70/036/002/0178/0180

CIRC ACCESSION NO--AP0123748

UNCLASSIFIED

APPROVED FOR RELEASE: 09/17/2001 CIA-RDP86-00513R002201620006-2"

"APPROVED FOR RELEASE: 09/17/2001 CIA-RDP86-00513R002201620006-2

2/2 015 UNCLASSIFIED PROCESSING DATE--23OCT70

CIRC ACCESSION NO--AP0123748

ABSTRACT/EXTRACT--(U) GP-0- ABSTRACT. IN THE ABSENCE OF ACID, NA SUB2 CO SUB3 WAS PRESENT IN THE REACTION MIXT., M-C SUB6 H SUB4 (CME SUB2 OOH) SUB2 DECOMPD. TO FORM 80-90PERCENT M-HOME SUB2 CC SUB6 H SUB4 CME SUB2 OOH. THIS DECOMPN. TAKES PLACE BY SOME MOL. MECHANISM AND NOT VIA A FREE RADICAL ONE SINCE IT IS UNAFFECTED BY THE PRESENCE OF P-C SUB6 H SUB4 (OH) SUB2 OR NAPHTHOL. FACILITY: DONETSK. OTD. INST. FIZ. KHIM. IM. PISARZHEVSKOGO, DONETSK, USSR.

UNCLASSIFIED

APPROVED FOR RELEASE: 09/17/2001 CIA-RDP86-00513R002201620006-2"

"APPROVED FOR RELEASE: 09/17/2001 CIA-RDP86-00513R002201620006-2

1/2 024 UNCLASSIFIED PROCESSING DATE--04DEC70

TITLE--KINETICS OF THE THERMAL DECOMPOSITION OF ALLYL HYDROPEROXIDE -U-

AUTHOR-(04)-CHERNYAK, B.I., KOSHOVSKIY, B.I., TYAGLO, V.B., KUCHER, R.V.

COUNTRY OF INFO--USSR

SOURCE--DOPOV. AKAD. NAUK UKR. RSR, SER. B 1970, 32(3), 256-61

DATE PUBLISHED--------70

SUBJECT AREAS--CHEMISTRY

TOPIC TAGS--THERMAL DECOMPOSITION, HYDROPEROXIDE, ACTIVATION ENERGY, SOLVENT ACTION, REACTION KINETICS

CONTROL MARKING--NO RESTRICTIONS

DOCUMENT CLASS--UNCLASSIFIED

PROXY REEL/FRAME--3005/0782 STEP NO--UR/0442/70/032/003/0256/0261

CIRC ACCESSION NO--AT0132880

UNCLASSIFIED

APPROVED FOR RELEASE: 09/17/2001 CIA-RDP86-00513R002201620006-2"

"APPROVED FOR RELEASE: 09/17/2001 CIA-RDP86-00513R002201620006-2

2/2 024 UNCLASSIFIED PROCESSING DATE--04DEC70

CIRC ACCESSION NO--AT0132880

ABSTRACT/EXTRACT--(U) GP-0- ABSTRACT. THE DECOMPN., STUDIED IN PHCL, BUOH, AND ACOH, WAS 1ST ORDER; THE RATE CONST. AND THE ACTIVATION ENERGY DECREASED WITH THE INCREASING POLARITY OF THE SOLVENT. THE PRODUCTS WERE CH SUB2:CHCH SUB2 OH AND CH SUB2:CHCHO, AND ME(CH SUB2) SUB2 CHO AND ACH IN ADDN. IN BUOH AND ACOH, RESP. FACILITY: DONETS. DERZH. UNIV., DONETSK, USSR.

UNCLASSIFIED

APPROVED FOR RELEASE: 09/17/2001 CIA-RDP86-00513R002201620006-2"

"APPROVED FOR RELEASE: 09/17/2001 CIA-RDP86-00513R002201620006-2

USSR UDC 8.74

KUCHER, T. I., and LISENKO, A. A., Editorial Board of Ukr. Fiz. Zh. (Ukrainian Physics Journal), Academy of Sciences Ukrainian SSR

"Algorithm for Calculation of Fourier Components of Crystalline Field in Face-Centered Cubic Crystals (Diamond- and NaCl-Type Lattice)"

Algoritm vychisleniya Fur'ye-komponent kristallicheskogo polya v granetsentrirovannykh kubicheskikh kristallakh (reshetki tipa almaza i NaCl) (cf. English above), Kiev, 1972, 7 pp, bibliography with four titles (No 3956-72 Dep.) (from RZh-Matematika, No 5, May 72, Abstract No 5V546DEP from authors' abstract)

Translation: An algorithm and program (in ALGOL) are presented for calculating Fourier components of a crystalline field $\hat{\varphi}(\vec{k})$ and Coulomb field $\vec{\psi}(\vec{k})$ in cubic face-centered crystals of the NaCl and diamond type.

1/1

APPROVED FOR RELEASE: 09/17/2001 CIA-RDP86-00513R002201620006-2"

"APPROVED FOR RELEASE: 09/17/2001 CIA-RDP86-00513R002201620006-2

UDC: 8.74

USSR

KUCHER, T. I., LISENKO, A. A., Editorial Staff of "Ukrainskiy fizicheskiy zhurnal", Academy of Sciences of the UkrSSR

"An Algorithm for Calculating the Fourier Components of a Crystal Field in Face-Centered Cubic Crystals (Lattices of the Diamond and NaCl Type)"

Algoritm vychisleniya Fur'ye komponent kristallicheskogo polya v granetsentrirovannykh kubicheskikh kristallakh (reshetki tipa almaza i NaCl) (cf. English above), Kiev, 1972, 7 pp, bibl. 4 titles (No 3956-72 Dep) (from RZh-Kibernetika, No 5, May 72, Abstract No 5V546 DEP)

Translation: The paper gives an algorithm and program (in ALGOL) for calculating the Fourier components of the crystal field $\hat{\phi}(k)$ and the Coulomb field of a point charge $\vec{\psi}(\vec{k})$ in face-centered cubic crystals of the diamond and NaCl type. Authors' abstract.

1/1

APPROVED FOR RELEASE: 09/17/2001 CIA-RDP86-00513R002201620006-2"

"APPROVED FOR RELEASE: 09/17/2001 CIA-RDP86-00513R002201620006-2

USSR UDC 615.31:547.861.37-012.1

PIS'KO, G. T., NEVSKAYA, T. L., GANUSHCHAK, N. I., BURYAK, V. S., BRUZDEV, A. I., KOSUBA, R. B., KUCHER, V. I., Chernowitskiy Medical Institute

"Synthesis and Pharmacologic Properties of New Derivatives of Piperidine"

Moscow, Khimiko--Farmatsevticheskiy Zhurnal, No 4, 1973, pp 14-17

Abstract: As a result of studying the relation between chemical structure and biological activity in a series of quaternary ammonia compounds, it was concluded [G. T. Pis'ko, "Chromotologic Properties Antimicrobic Effect of Derivatives of Ethylene- and Hexamethylenediamine," Doctor's Dissertation, Chernotsy Dnepropetrovsk, 1965; Farmakol o toksikol, No 5, 1970] that the basic role in the antimicrobic effect of these compounds belongs to the high-molecular alcohol radical which is joined by the ester bond to the quaternary nitrogen atom. A study was made of the synthesis and pharmacological properties of some new derivatives of piperidine containing high-molecular alcohol radicals. For synthesis of N-(4-phenyl-3-methylputene-2-yl-1)-N--carbalkoxymethyl piperidinium chlorides (I-X), the interaction of N-aryl-butenyl derivatives of pure piperidine and esters of monochloroacetic acid were used. On heating in dry diethyl ether, stable, highly water soluble compounds I-X were obtained with good yields.

1/2

APPROVED FOR RELEASE: 09/17/2001 CIA-RDP86-00513R002201620006-2"

"APPROVED FOR RELEASE: 09/17/2001 CIA-RDP86-00513R002201620006-2

3

USSR

PIS'KO, G. T., et al., Khimiko-Farmatsevticheskiy Zhurnal, No 4, 1973, pp 14-17

The general effect and toxicity of the compounds were studied on white rats and white mice on intraperitoneal administration. The effects of the compounds on the arterial pressure, respiration and tonus of the third eyelid was studied in acute experiments on cats. Other experiments and the results are described. In studying the antimicrobic properties of the compounds the most sensitive turned out to be staphylococcus aureus and Candida albican fungus. The least sensitive were Vacilous coli, Proteus vulgaris Pseudomas Pyocyanea. When studying the relation between the chemical structure and the antimicrobic effect it was found that the activity appears for $R = 1CH_3$; then gradually increases and the maximum effect is observed for $R = C_9H_{19}$.

2/2

APPROVED FOR RELEASE: 09/17/2001 CIA-RDP86-00513R002201620006-2"

"APPROVED FOR RELEASE: 09/17/2001 CIA-RDP86-00513R002201620006-2

4

USSR

UDC 615.31:[illegible]

HANUSHCHAK, N. I., [illegible], G. T., BURYAK, V. S., [illegible], K. I., NIKOLAYCHUK, N. A., KARINKOVSKAYA, R. B., NEVSKAYA, T. I., and ZAPOROZHETS, V. I.; Chernovtsy University

"Synthesis and Certain Biological Properties of Piperidine Derivatives"

Moscow, Khimiko-Farmatsevticheskiy Zhurnal, Vol 5, No 9, [illegible]

Abstract: Piperidine derivatives have a wide range of biological [illegible] many of them are now used in medical practice. However, the biological [illegible] depends largely upon the nature of the substitutes introduced, [illegible] nitrogen atom, and at the carbon atoms of the peridine rim. [illegible] compounds substituted with fatty-aromatic radicals at the [illegible] have multiple carbon-carbon bonds have been very little studied. [illegible] studied 23 members of this group to determine their biological [illegible] animals (cats, white mice), and to determine basic physico-chemical [illegible]. Increased toxicity, effect on blood pressure, and strengthened [illegible] rents were observed in many cases. Data obtained are summarized [illegible] form.

1/1

APPROVED FOR RELEASE: 09/17/2001 CIA-RDP86-00513R002201620006-2"

"APPROVED FOR RELEASE: 09/17/2001 CIA-RDP86-00513R002201620006-2

USSR

UDC 669.71.48

BRUSAKOV, YU. I., SIROTKIN, N. N., RZHAVIN, S. A., AVDEYEV, M. P., ALIYOVODICH, M. KH., KUCHERENKO, A. G.

"Processing Metal-Containing Slags in the Production of Silicon Aluminate Alloys"

Tr. Vses. n.-i. i proyektn. in-ta alyumin., magn. i elektrodn. prom-sti (Works of the All-Union Scientific Research and Planning and Design Institute of Aluminum, Magnesium and Electrode Industry), 1970, No 71, pp 177-183 (from RZh-Metallurgiya, No 4, Apr 71, Abstract No 4G197)

Translation: Test results with respect to ore recovery processing of metal slags formed when obtaining and defining aluminum alloys with silicon are discussed. The technical possibility and expediency of recovery of crushed slags in the indicated alloy production process are confirmed. The specific consumption indexes of the alloys in large 120 and 16,500 kilowatt-ampere laboratory and industrial furnaces are presented. The extraction of alloy from the slags exceeded the content of metal phase in them. This indicates additional extraction of metal from the carbides and oxides contained in the slags in the amount of up to 55% in a large laboratory furnace and 27% in an industrial furnaces. There are 5 tables.

1/1

APPROVED FOR RELEASE: 09/17/2001 CIA-RDP86-00513R002201620006-2"

"APPROVED FOR RELEASE: 09/17/2001 CIA-RDP86-00513R002201620006-2

USSR

UDC 547.831+661.52

SHEYNKMAN, A. K., PRILEPSKAYA, A. N., KUCHERENKO, A. F., BARANOV, S. N.

"Direction of Quaternization of Six-Membered Nitride Heterocycles Containing the Dialkylaminophenyl Radical"

Kiev, Ukrainskiy Khimicheskiy Zhurnal, Vol XXXVIII, No 6, 1972, pp 589-594

Abstract: It is known that the cause of the chromaticity of pyridine and benzopyride salts is frequently the formation of complexes with charge transfer [E. M. Kosover, Novyye problemy fizicheskoy organicheskoy khimii, Mir Press, Moscow, 36-94, 1969]. Accordingly, the conclusions of D. I. Gamaise, et al. [Chem. and Ind., 1645, 1967] were checked on various six-membered heterocycles containing the n-dialkylaminophenyl radicals in the α and γ positions. Thus, a study was made of the direction of quaternization under various conditions of bases (I) and also 2-n-dialkylaminophenyl quinolines (II), 2-(1'-alkyl-1',2',3',4'-tetrahydroquinolinyl-6')-quinolines (III) and 9-n-dialkylaminophenylacridines (IV). In the reaction of 2-n-dialkylaminophenylquinolines and their analogs with alkyl halides at 80-150°, the following quaternary salts were obtained: 4-(n-dialkylaminophenyl)-pyridinyl, 2(n-dialkylaminophenyl)quinolinyl, 1-methy-6-(quinolyl-2')-1, 2, 3, 4-tetrahydroquinolinyl, 9-n-(dialkylaminophenylacridinyl). Substitutions are presented for the ring R' and the extraring nitrogen atom R and the anions X. Synthesis procedures, physical and chemical characteristics and yields are presented for eight compounds.

1/1

APPROVED FOR RELEASE: 09/17/2001 CIA-RDP86-00513R002201620006-2"

"APPROVED FOR RELEASE: 09/17/2001 CIA-RDP86-00513R002201620006-2

USSR UDC 622.243.22

KUCHERENKO, A. Ya. and NIKITIN, E. N. (SevKavNIPIneft' -- North Caucasian Scientific Research and Planning Institute of Petroleum)

"Drilling a Shaft 295 mm in Diameter to a Depth of 4673 Meters"

Moscow, Bureniye, No 9, 1972, pp 6-9

Abstract: A description is given of the drilling conditions, the composition of the bottom of the drilling column, the parameters of the drilling regimen, and the specifications of the drilling fluid in the drilling of exploratory shaft No 47, with a planned depth of 7,000 m, sunk in the southern limb of the Zamankul fold of the Sunzhensk range 120 km west of Groznyy, to a depth of 4673 meters. This is the greatest depth ever reached by a bit 295 mm in diameter in the areas of Checheno-Ingushetiya. 2 figures, 1 table.

1/1

APPROVED FOR RELEASE: 09/17/2001 CIA-RDP86-00513R002201620006-2"

"APPROVED FOR RELEASE: 09/17/2001 CIA-RDP86-00513R002201620006-2

1/2 010 UNCLASSIFIED PROCESSING DATE--30OCT70

TITLE--APPLICATION OF THE GALERKIN METHOD TO THE INTEGRATION OF SYSTEMS OR ORDINARY NONLINEAR EQUATIONS -U-

AUTHOR--KUCHERENKO, E.I.

COUNTRY OF INFO--USSR

SOURCE--DIFFERENTSIAL'NYE URAVNENIIA, VOL. 6, MAR. 1970, P. 475-482. 6 REFS.

DATE PUBLISHED--------70

SUBJECT AREAS--MATHEMATICAL SCIENCES

TOPIC TAGS--BOUNDARY VALUE PROBLEM, DIFFERENTIAL EQUATION SYSTEM, DIFFERENTIAL EQUATION SOLUTION, INTEGRATION

CONTROL MARKING--NO RESTRICTIONS

DOCUMENT CLASS--UNCLASSIFIED

PROXY REEL/FRAME--1996/1415 STEP NO--UR/0376/70/006/000/0475/0482

CIRC ACCESSION NO--AP0118404

UNCLASSIFIED

APPROVED FOR RELEASE: 09/17/2001 CIA-RDP86-00513R002201620006-2"

"APPROVED FOR RELEASE: 09/17/2001 CIA-RDP86-00513R002201620006-2

2/2 010 UNCLASSIFIED PROCESSING DATE--30OCT70

CIRC ACCESSION NO--AP0118404

ABSTRACT/EXTRACT--(U) GP-0- ABSTRACT. PROOF OF THE EXISTNECE AND UNIQUENESS OF A SOLUTION TO A SYSTEM OF ORDINARY NONLINEAR EQUATIONS. THE CONVERGENCE OF THE GALERKIN METHOD WHEN APPLIED TO THE BOUNDARY VALUE PROBLEM OF THIS SYSTEM IN A SUITABLY CHOSEN SPACE IS DEMONSTRATED. THE SOLUTION IF GIVEN IN THE FORM OF INTEGRO DIFFERENTIAL EQUATIONS. THE FORM OF THE CONSTANT OF LIPSHITS CONDITIONS IS DETERMINED AS THE PRODUCT OF SEVERAL VARIABLES. FACILITY: RIAZANSKII RADIOTEKHNICHESKII INSTITUT, RYAZAN, USSR.

UNCLASSIFIED

APPROVED FOR RELEASE: 09/17/2001 CIA-RDP86-00513R002201620006-2"

"APPROVED FOR RELEASE: 09/17/2001 CIA-RDP86-00513R002201620006-2

USSR

UDC: 621.317.77

KUCHERENKO, V. N. and KRAVCHENKO, S. A.

"Methods of Reducing the Amplitude-Phase Errors of Electronic Phasemeters"

V sb. Vopr. uluchcheniya tekhn. parametrov vypryamit. i tranzist. priborov (Problems of Improving the Technical Parameters of Rectifiers and Transistorized Devices--collection of works) Leningrad, 1970, pp 280-292 (from Zh-Radiotekhnika, No. 3, March 71, Abstract No. 3A353)

Translation: As the result of an analysis of some types of electronic phasemeters, the following conclusions are arrived at. The amplitude-phase error (APE) appears principally in the first stages of the phasemeter channels. It can be reduced somewhat by special measures, but cannot be completely eliminated. The APE can be computed by plotting a curve to be attached to the manufactured phasemeter. Then, the value of the APE can be taken out of the total phasemeter error by introducing only its dispersion. Bibliography of four. E. L.

1/1

APPROVED FOR RELEASE: 09/17/2001 CIA-RDP86-00513R002201620006-2"

"APPROVED FOR RELEASE: 09/17/2001 CIA-RDP86-00513R002201620006-2

USSR

UDC: 621.317.77

KUCHERENKO, G. N. and KRAVCHENKO, S. A.

"Measuring Device for Determining Electronic Phase Meter Errors from Nonlinear Distortions"

V sb. Vopr. uluchsheniya tekhn. parametrov vyprymit. i tranzist. priborov (Problems of Improving the Technical Parameters of Rectifiers and Transistorized Devices--collection of works) Leningrad, 1970, pp 146-153 (from Izm-Analiztekhnika, No. 3, March 71, Abstract No. 3A360)

Translation: The operation and description of a circuit permitting a signal with specific known non-linear distortions in second- to fifth-order harmonics to be applied to a phase meter are described. The investigation of a real phase meter made with a mock-up of this device has shown that the third and fourth harmonics have the greatest effect. Bibliography of one. E. L.

1/1

APPROVED FOR RELEASE: 09/17/2001 CIA-RDP86-00513R002201620006-2"

"APPROVED FOR RELEASE: 09/17/2001 CIA-RDP86-00513R002201620006-2

USSR

UDC: 621.317.77

KUCHERENKO, G. N., SKRIPNIK, Yu. A., and YAKOVLEV, B. F.

"Experimentally Estimating the Accuracy of Electronic Phasemeters"

V sb. Vopr. uluchsheniya tekhn. parametrov vyprymit. i tranzist. priborov (Problems of Improving the Technical Parameters of Rectifiers and Transistorized Devices--collection of works) Leningrad, 1970, pp 213-216 (from RZh-Radiotekhnika, No. 3, March 71, Abstract No. 3A361)

Translation: An indication is given of the high accuracy of phasemeters as checked by phase rotators and by the "self-checking" principle. A description is given of the method of "equal segments" based on the physical compatibility of 0° and 360° values, i.e., on the use of the natural standard of the 360° phase shift. The accuracy of the verification of this method is determined basically by random errors in indications of zero and readout values on the readout device. Bibliography of two. B. L.

1/1

APPROVED FOR RELEASE: 09/17/2001 CIA-RDP86-00513R002201620006-2"

"APPROVED FOR RELEASE: 09/17/2001 CIA-RDP86-00513R002201620006-2

USSR UDC: 621.317.77

KUCHERENKO, C. N. and KRAVCHENKO, S. R.

"New Method for Checking Electronic Phase Meters at 200 KHz"

V sb. Vopr. uluchshenivo tekhn. parametrov vyprvamit. i transist. priborov (Problems of Improving the Technical Parameters of Rectifiers and Transistorized Devices--collection of works) Leningrad, 1970, pp 186-191 (from RZh-Radiotekhnika, No. 3, March 71, Abstract No. 3A363)

Translation: In this proposed method a new type of phase sensor without a phase shifter and with regenerative frequency dividers (RFD) and frequency multipliers is used. The basis of the sensor's action is a characteristic of the RFD to which any stable value of the RFD initial phase with a division factor of n, there corresponds another (n - 1) stable phase state through an angle of $2\pi/n$. It is established that a discreteness of 12° is sufficient for checking any phase meter. The error of the sensor model did not exceed 0.2°. E. L.

1/1

APPROVED FOR RELEASE: 09/17/2001 CIA-RDP86-00513R002201620006-2"

"APPROVED FOR RELEASE: 09/17/2001 CIA-RDP86-00513R002201620006-2

USSR UDC 621.317.77

KUCHERENKO, G. N., BORISOV, V. F., and KRAVCHENKO, S. A.

"A Method of Verifying Electronic Phase Meters in a Frequency Range of the Order of 10 MHz"

V sb. Vopr. uluchsheniya tekhn. parametrov vyprymit. i tranzist. priborov (Problems of Improving the Technical Parameters of Rectifiers and Transistorized Devices--collection of works) Leningrad, 1970, pp 240-246 (from RZh-Radiotekhnika, No. 3, March 71, Abstract No. 3A362)

Translation: It is shown that the best method for verifying phase meters in the 10 MHz frequency range is the specification of known phase shifts through sample phase-shift devices (PSD). The most promising is the PSD with phase automatic frequency control. The characteristics of the phase AFC system permits its use in the design of highly accurate PSD with a wide phase and frequency range. A circuit diagram and the characteristics of the developed PSD are given. Bibliography of two. E. L.

1/1

APPROVED FOR RELEASE: 09/17/2001 CIA-RDP86-00513R002201620006-2"

"APPROVED FOR RELEASE: 09/17/2001 CIA-RDP86-00513R002201620006-2

UDC: 621.317.77

USSR

DREMLYUGA, V. Ya. and KUCHERENKO, S. N.

"Effect of Higher Harmonics of the Input Signal on the Measurement Error of Heterodyne Phase Meters"

V sb. Vopr. uluchsheniya tekhn. [illegible] rametrov vypryamit. i tranzist. priborov (Problems of Improving the Technical Parameters of Rectifiers and Transistorized Devices--collection of works) Leningrad, 1970, pp 69-73 (from Kzh-Radiotekhnika, No. 3, March 71, Abstract No. 3A364)

Translation: A theoretical investigation of the problem is made. The basic conclusion is that the conversion multiplicity must be increased if the error is to be reduced. E. L.

1/1

APPROVED FOR RELEASE: 09/17/2001 CIA-RDP86-00513R002201620006-2"

"APPROVED FOR RELEASE: 09/17/2001 CIA-RDP86-00513R002201620006-2

KUCHERENKO, G. N. and KRAVCHENKO, S. A.

"Estimating the Error of Electronic Phase Meters from Nonlinear Signal Distortions"

V sb. Vopr. uluchshaniya tekhn. parametrov vyprymnit. i tranzist. priborov (Problems of Improving the Technical Parameters of Rectifiers and Transistorized Devices--collection of works) Leningrad, 1970, pp 114-120 (from RZh-Radiotekhnika, No. 3, March 71, Abstract No. 3A365)

Translation: The errors of two-channel phase meters (trigger and switch modulated) caused by signal distortions applied to their inputs are discussed. Results of theoretical and experimental results show that the boundary values of the coefficient of nonlinear distortion at which systematic errors begin, at the present stage of oscillator development, may be considered to be 0.2%. A formula connecting the maximum phase meter error with the coefficient of nonlinear distortion is given. E. L.

1/1

APPROVED FOR RELEASE: 09/17/2001 CIA-RDP86-00513R002201620006-2"

"APPROVED FOR RELEASE: 09/17/2001 CIA-RDP86-00513R002201620006-2

UDC: 621.317.77

USSR

MINTS, M. Ya., KUCHERENKO, G. N.

"Analyzing the Effect of Nonlinear Distortions on the Accuracy of Determining Phase Shifts Between Fundamental Harmonics"

V sb. Vopr. uluchsheniya tekhn. parametrov vyprymnit. i tranzist. priborov (Problems of Improving the Technical Parameters of Rectifiers and Transistorized Devices--collection of works) Leningrad, 1970, pp 364-368 (from RZh-Radiotekhnika, No. 3, March 71, Abstract No. 3A349)

Translation: An analysis is conducted of the problem of maximum error in the determination of the phase shift between oscillations with harmonics. A condition is found which imposes a limit on the coefficient of nonlinear distortion: namely, that the determination of the phase shift at moments of transition through zero is unique only when it is realized. Bibliography of one. [illegible]

1/1

APPROVED FOR RELEASE: 09/17/2001 CIA-RDP86-00513R002201620006-2"

"APPROVED FOR RELEASE: 09/17/2001 CIA-RDP86-00513R002201620006-2

AA0040443

UR 0482

P-70

Soviet Inventions Illustrated, Section I Chemical, Derwent,

236676 ARGON-ARC WELDING TORCH has a water-cooled arrangement in the form of two coaxial cylindrical channels inside a housing, which are joined at the lower part by radial openings. To reduce the protrusion of the electrode to 10-15mm the ratio of length of cylindrical part of nozzle to its bore is made 0.5-0.6 and this improves the life of the tungsten electrode. 30.11.67. as 1200836/25-27. A.K.BARANOV et alia. (19.6.69.) Bul.7/3.2.69 Class 21h. Int.Cl. B23k.

AUTHORS: Baranov, A. K.; Kryukovskiy, V. M.; Kuchherenko, G. P.; Konradi, G. G.; Raymond, E. D.; Agroskin, Ya. Z.

18

1/2

19741933

APPROVED FOR RELEASE: 09/17/2001 CIA-RDP86-00513R002201620006-2"

"APPROVED FOR RELEASE: 09/17/2001 CIA-RDP86-00513R002201620006-2

AA0040443

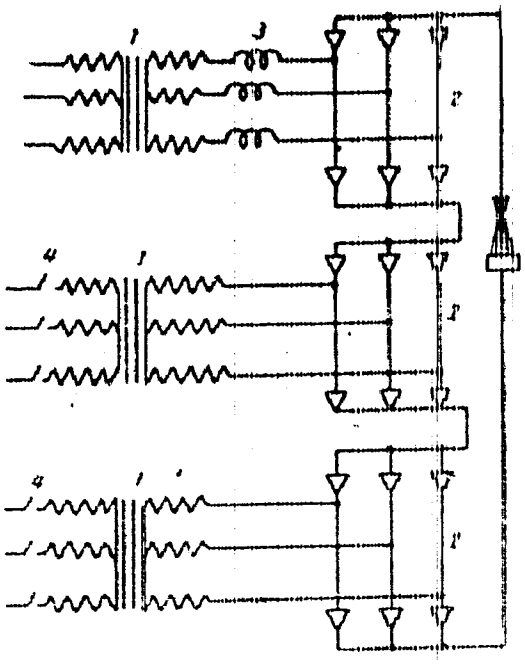

APPROVED FOR RELEASE: 09/17/2001 CIA-RDP86-00513R002201620006-2"

"APPROVED FOR RELEASE: 09/17/2001 CIA-RDP86-00513R002201620006-2

USSR UDC 3.74

KUCHERENKO, I. A., PCHELINA, N. G.

"Use of the Ekonomist Algorithmic Language when solving Automatic Control System Problems"

Tr. N.-i. i proyekt. in-ta mekhaniz. i avtomatiz. upr. protsessami v avtom. prom-sti (Works of the Scientific Research and Planning and Design Institute of Mechanization and Automation of Production Control in the Motor Vehicle Industry), 1971, vyp. 2, pp 144-146 (from RZh-Kibernetika, No 7, Jul 72, Abstract No 7V595)

Translation: A system is described for automation of the Ekonomist programming, its composition and possibilities. The standard procedures for data processing realized by the operators of the language are defined. The steps in working with the computer system, the possibilities of the translator and the operation system are indicated. Results are presented from operation and maintenance of the system.

1/1

APPROVED FOR RELEASE: 09/17/2001 CIA-RDP86-00513R002201620006-2"

"APPROVED FOR RELEASE: 09/17/2001 CIA-RDP86-00513R002201620006-2

USSR UDC: 8.74

KUCHERENKO, I. A. and PCHELINA, N. G.

"Using the 'Economist' Algorithmic Language for Solving Problems of Automatic Control Systems"

Tr. N.-i. i proyekt. in-ta mekhaniz. i avtomatiz. upr. proiz-vom v avtomob. prom-sti (Transactions of the Scientific Research and Design Institute for Mechanizing and Automating Production Control in the Automotive Industry) No 2, 1971, pp 144-148 (from RZh--Matematika, No 7, 1972, Abstract No 7V595)

Translation: A system is described for automating the "Economist" program, its condition and capabilities. Typical procedures are determined for processing information realized by operators of the language. Stages of work with the system on an electronic computer, the possibilities of the translator, and the operational system are indicated. Results of the operation of the system are given.

1/1

APPROVED FOR RELEASE: 09/17/2001 CIA-RDP86-00513R002201620006-2"

"APPROVED FOR RELEASE: 09/17/2001 CIA-RDP86-00513R002201620006-2

USSR UDC 669.245'71

KUCHERENKO, L. A., and TROSHKINA, V. A., Moscow

"Conversions in the NiAl Compound"

Moscow, Izvestiya Akademii Nauk SSSR, Metally, No 1, Jan 71, pp 170-173

Abstract: The true heat capacity and electrical resistance of the NiAl compound and its solid solutions were measured after various heat treatments. An alloy with equiatomic composition was studied, as were alloys rich in nickel (55 at.% Ni) and aluminum (55 at.% Al). Heat treatments included annealing (beginning at 1150°C, subsequently dropping to 400°C over 700 hours), and quenching in ice water from 1250, 1150, and 900° (after holding at these temperatures for 3, 5, and 48 hours, respectively). At about 550°C, the structure of the compound undergoes partial disordering. On the basis of the data produced and data from the literature, it is assumed that the conversion in NiAl results from vacancy-type defects, allowing intraphase breakdown, forming microareas of Ni_2Al_3.

1/1

APPROVED FOR RELEASE: 09/17/2001 CIA-RDP86-00513R002201620006-2"

"APPROVED FOR RELEASE: 09/17/2001 CIA-RDP86-00513R002201620006-2

USSR UDC: 621.745.5

KUCHERENKO, L. A., GLEBOVSKIY, V. G., and BURTSEV, V. T., Department of General Chemistry, Moscow State University

"Levitation Melting (Using an "Electromagnetic Crucible") for High-Temperature Reaction Studies"

Moscow, Vestnik Moskovskogo Universiteta, Series II, Khimiya, No. 6, Vol. 11, Nov-Dec 70, pp 700-704

Abstract: Experiments involving liquid metal desulfuration with slags by way of refractory magnesium oxide crucibles revealed slag saturation with up to 12% MgO. Dissolution of refractory magnesium oxide in the slag markedly decreased with temperature. Earlier studies have attempted to find methods for excluding the contact of refractory metals with the liquid phase or at least to reduce the contact to a minimum. All current methods proposed inferred the use of a refractory crucible which absolutely limited equilibrium studies in the metal-slag system. This study proposes

1/2

APPROVED FOR RELEASE: 09/17/2001 CIA-RDP86-00513R002201620006-2"

"APPROVED FOR RELEASE: 09/17/2001 CIA-RDP86-00513R002201620006-2

USSR

KUCHERENKO, L. A., et al, Vestnik Moskovskogo Universiteta, Series II, Khimiya, No. 6, Vol. 11, Nov-Dec 70, pp 700-704

the use of an "electromagnetic crucible" or fluidized bed melting. This method of levitation melting features: lack of contact between liquid metal and slag, vigorous mixing of molten metal with slag, minimum time of reaching a given temperature (20-30 sec), and equilibrium in the complex system metal-slag-gas (2-3 min). The experimental equipment, specifications, and reaction are described. To preclude side reactions (such as gas conversion, metal or slag vaporization) the process must be conducted in a specific temperature range. In this study use was also made of the method of levitation to analyze the relation between sulfur distribution factor L_s and the carbon content in iron in a carbon monoxide atmosphere. L_s values are calculated by thermodynamics.

2/2

APPROVED FOR RELEASE: 09/17/2001 CIA-RDP86-00513R002201620006-2"

"APPROVED FOR RELEASE: 09/17/2001 CIA-RDP86-00513R002201620006-2

USSR

ZAKHAROV, V. P., GERASIMENKO, V. S., KUCHERENKO, L. P.

"Optical Phonons in Amorphous Arsenic Chalcogenide Films"

Leningrad, Fizika Tverdogo Tela, Vol 14, No 8, Aug 72, pp 2466-2468

Abstract: An investigation is made of the vibrational spectrum of binary mixtures of arsenic chalcogenides of various compositions in the form of amorphous thin films produced by thermal deposition in a vacuum. A study of the infrared transmission spectra of As_2S_3 and As_2Se_3 showed the absorption bands typical of these substances in the crystal state for As_2S_3 and in the vitreous state for As_2Se_3. No absorption band was observed in the 400-33 cm^{-1} frequency interval in the IR-spectrum of thin films of As_2Te_3. An examination of the transmission spectra of mixtures of $As_2(S_xSe_{1-x})_3$ and $As_2(S_xTe_{1-x})_3$ deposited from suspensions of various compositions showed that the presence of atoms of heavier chalcogenides in the mixture changes the relative intensity of the bands of the As_2S_3 spectrum. When selenium is introduced into the films, the most noticeable change is observed for the low-frequency band, and the center of gravity of the entire absorption band for As_2S_3 is displaced toward the

APPROVED FOR RELEASE: 09/17/2001 CIA-RDP86-00513R002201620006-2"

"APPROVED FOR RELEASE: 09/17/2001 CIA-RDP86-00513R002201620006-2

USSR

ZAKHAROV, V. P., Fizika Tverdogo Tela, Vol 14, No 8, Aug 72, pp 2466-2468

high-frequency region, occupying a position defined by two stable bands in the As_2S_3 spectrum. The relative intensity of the As_2Se_3 absorption band increases with an increase in its content in the film, and a slight displacement is observed in the position of the band maximum toward the low-frequency region of the spectrum. It is concluded that the solubility of As_2S_3 and As_2Se_3 in chalcogenide mixtures is higher than that of As_2Te_3.

2/2

APPROVED FOR RELEASE: 09/17/2001 CIA-RDP86-00513R002201620006-2"

"APPROVED FOR RELEASE: 09/17/2001 CIA-RDP86-00513R002201620006-2

USSR UDC 616.288.75+616.2-036.11]-053.2-085.339:576.858]-039.71

YERMOL'YEVA, Z. V., BLINOVA, M. I., FURER, N. M., RITOVA, V. V., KUCHERENKO, L. P., NEMIROVSKAYA, B. M., SHCHERBAKOVA, E. G., SCHASTNYY, E. I., ORLOVA, L. N., and FAYNSHTEYN, S. L., Chair of Microbiology, Central Institute for Advanced Training of Physicians, and Institute of Virology imeni D. I. Ivanovskiy, USSR Academy of Medical Sciences, Moscow

"Prophylaxis of Influenza and Other Acute Respiratory Diseases Among Children Through Administration of Leukocytic Interferon and a Stimulant of Interferon Production (UF Virus)"

Moscow, Voprosy Virusologii, No 4, Jul/Aug 71, pp 442-446

Abstract: An express method of preventing influenza and other acute respiratory diseases was tested in childrens' institutions in Moscow during the interepidemic period of March-June 1968 and during the influenza epidemic in January-February 1969. The project was carried out under strictly controlled, coded experimental conditions. The 750 children, aged 10 months to 7 years, were divided into four groups at random, and the preventive agents were administered intranasally. One group received leukocytic interferon two times per day for 7 to 42 days. The second group received interferon with liquid ecmoline. The third group received UF virus once daily for 3-4 days with

1/2

APPROVED FOR RELEASE: 09/17/2001 CIA-RDP86-00513R002201620006-2"

"APPROVED FOR RELEASE: 09/17/2001 CIA-RDP86-00513R002201620006-2

USSR

YERMOL'YEVA, Z. V., et al, Voprosy Virusologii, No 4, Jul/Aug 71, pp 442-446

intervals of 3-4 days. The fourth group received placebos. The effectiveness index of interferon was 3.0 (frequency of diseases three times smaller than in the placebo group) in the interepidemic period and 2.2 during the epidemic. The effectiveness index of interferon with ecmoline was 1.8, and that of UF virus was 3.0 in the interepidemic period. All differences are statistically significant. Since no toxic effects were observed, the method is recommended for the prevention of influenza and other acute respiratory diseases.

2/2

APPROVED FOR RELEASE: 09/17/2001 CIA-RDP86-00513R002201620006-2"

"APPROVED FOR RELEASE: 09/17/2001 CIA-RDP86-00513R002201620006-2

USSR UDC 577.164.1:612.015.3:577.391

SOPIN, Ye. F., and KUCHERENKO, M. Ye., Chair of Human and Animal Biochemistry, Kiev University imeni T. H. Shevchenko

"Effect of Some B-Complex Vitamins on Metabolism in Radiation Injury"

Kiev, Ukrainskiy Biokhimicheskiy Zhurnal, Vol 42, No 3, 1970, pp 289-293

Abstract: A review of research conducted at the Chair of Human and Animal Biochemistry, Kiev University, on the effects of radiation on various metabolic pathways and ways in which these effects can be counteracted by B-complex vitamins is presented. For example, administration of vitamin PP prolonged the life of animals subjected to lethal radiation doses. It was assumed that methylation processes are blocked or at least disrupted as a result of radiation injury. Other studies have shown that cholesterol metabolism also depends on vitamin B_1. In general, cholesterol was found to be very important in metabolic processes, especially in those of nervous tissues. Folic acid was found to have radioprotective properties and was capable of stabilizing the RNA-DNA content in the brain.

1/1

APPROVED FOR RELEASE: 09/17/2001 CIA-RDP86-00513R002201620006-2"

"APPROVED FOR RELEASE: 09/17/2001 CIA-RDP86-00513R002201620006-2

USSR UDC: 539.3:534.1

KOLODYAZHNYY, A.P., KRASOVSKIY, V.L. and KUCHERENKO, V.M.

"Tests of Reinforced Cylindrical Shells for Stability Under Bending"

Dnepropetrovsk, Sb. Resheniye Nekotor, Fiz.-Tekhn. Zadach (Symposium on Solution of Certain Physical-Technical Problems), 1972, pp 49-52 (from Referativnyy Zhurnal-Mekhanika, 1973, Abstract No 2V294 by V.V. Kabanov)

Translation: A device is described for testing shells under pure bending on a universal compression machine, inspection test results are given for nonreinforced shells fabricated by spot welding out of KH18N9N steel plate. These test results agree with known data. Brief information is also included on strain gage tests of a shell reinforced by stiffeners. It is pointed out that at the instant of total loss of stability the amplitude of compression stress is 1.3 time the amplitude of tension stress.

1/1

APPROVED FOR RELEASE: 09/17/2001 CIA-RDP86-00513R002201620006-2"