"APPROVED FOR RELEASE: 09/17/2001 CIA-RDP86-00513R002201630004-3

USSR

UDC: 539.374

KUNIN, N. F., YURCHENKO, B. D.

"Theoretical Studies of Internal Friction in Materials Subjected to Plastic Deformation"

Dokl. XXX Nauchno-tekhn. konferentsii. Mosk. in-t khim. mashinostr. T. 2, vyp. 1 (Reports of the Thirtieth Scientific and Technical Conference, Moscow Institute of Chemical Machinery, Vol. 2, No 1), Moscow, 1970, pp 43-46 (from RZh-Mekhanika, No 4, Apr 71, Abstract No 4V347)

Translation: The paper describes a method of determining the coefficient of internal friction in a material which is plastically deformed by upsetting. The model of a Newtonian viscous material is used for determining the coefficient of internal friction. Lateral flow in a specimen during upsetting is treated as laminar. The coefficient of internal friction in a deformable metal is assumed to coincide with the coefficient of viscosity η in a Newtonian model of viscous fluid. The method is based on determining the coefficient of viscosity from the amount of buckling of the lateral surface of a cylindrical specimen subjected to plastic upsetting.

Abstractor's Note: The coefficient of internal friction coinciding with the coefficient of viscosity in the Newtonian model of a viscous fluid

1/2

APPROVED FOR RELEASE: 09/17/2001 CIA-RDP86-00513R002201630004-3"

"APPROVED FOR RELEASE: 09/17/2001 CIA-RDP86-00513R002201630004-3

KUNIN, N. F., YURCHENKO, B. D., Dokl. XXX Nauchno-tekhn. konferentsii. Mosk. in-t khim. mashinostr. T. 2, vyp. 1, Moscow, 1970, pp 43-46

should, according to this definition by the authors, be some physical constant of the material being considered. However, the proposed method of determining its value from the degree of barrel-shaped distortion of a cylindrical specimen during upsetting means that its value depends primarily on the conditions of contact friction during upsetting, rather than on the physical and mechanical properties of the material being deformed. In reality, as the contact friction decreases, the barrel-shaped distortion of the specimen during upsetting can be made as small as desired since the stressed and deformed state of the specimen in this connection can be made as close as desired to uniaxial compression. In this case, in accordance with the proposed method, the coefficient of internal friction may become arbitrarily great. Ye. M. Tret'yakov.

2/2

APPROVED FOR RELEASE: 09/17/2001 CIA-RDP86-00513R002201630004-3"

"APPROVED FOR RELEASE: 09/17/2001 CIA-RDP86-00513R002201630004-3

USSR

UDC 539.184.01

ZAPOL', B. P., KUNIN, P. YE., and TAKSAR, I. M., Latvian Order of the Red Banner of Labor State University imeni P. Stuchka

"Effective Potential Method for Computation of Quantum Systems. II. Nonrelativistic Wave Functions and Eigenvalues"

Riga, Izvestiya Akademii Nauk Latviyskoy SSR, Seriya Fizicheskikh i Tekhnicheskikh Nauk, No 6, 1971, pp 20-25

Abstract: The article gives a detailed description of a new calculation technique using the effective potential method, discussed in an earlier article by the authors. The fundamental principle of the method is as follows: For calculating wave functions of an optical electron in an alkali metal atom in a good approximation, it can be considered that its states are defined by some effective field so that the problem reduces to a one-electron problem. The effective potential of this field in the effective potential method is found from ordinary physical considerations and from the condition for the best coincidence between the eigenvalue spectrum of the electron energy in the effective potential and the experimental energy spectrum. The method is based

1/3

APPROVED FOR RELEASE: 09/17/2001 CIA-RDP86-00513R002201630004-3"

"APPROVED FOR RELEASE: 09/17/2001 CIA-RDP86-00513R002201630004-3

USSR

ZAPOL', B. P., et al., Izvestiya Akademii Nauk Latviyskoy SSR, Seriya Fizicheskikh i Tekhnicheskikh Nauk, No 6, 1971, pp 20-25

on the physical assumption that the small difference of the energy spectra for two different potentials over the entire energy range also entails the small difference of wave functions. The validity of this assumption was confirmed by the results of the authors' previous article. The fundamental difference between the effective potential method and semiempirical methods is the use of eigenfunctions of the electron in the effective potential, which is the same for all states and assures the best coincidence between the eigenvalue spectrum and the experimental spectrum.

The calculation procedure is considered, with the effective potential sought in the following form (atomic units are used in the article):

$$U(r) = -(A_i/r) - G_i \text{ for } r_i < r < r_{i+1}$$
$$i = 1, 2, \ldots, m; \; r_0 = 0; \; r_{m+1} = \infty;$$

2/3

APPROVED FOR RELEASE: 09/17/2001 CIA-RDP86-00513R002201630004-3"

"APPROVED FOR RELEASE: 09/17/2001 CIA-RDP86-00513R002201630004-3

USSR

ZAPOL', B. P., et al., Izvestiya Akademii Nauk Latviyskoy SSR, Seriya Fizicheskikh i Tekhnicheskikh Nauk, No 6, 1971, pp 20-25

where $A_0 = Z$, $A_m = K$, $G_m = 0$; while the remaining A_i, G_i, and r_i are free parameters to be determined from the condition for the best coincidence between the theoretically found and the experimental spectrum. Eigenvalues and analytic eigenfunctions are given for a series of Na and Rb states.

An appendix suggests a new method for calculating Whittaker functions.

3/3

CSO: 1862-W

- END -

APPROVED FOR RELEASE: 09/17/2001 CIA-RDP86-00513R002201630004-3"

"APPROVED FOR RELEASE: 09/17/2001 CIA-RDP86-00513R002201630004-3

1/2 023 UNCLASSIFIED PROCESSING DATE--11SEP70

TITLE--STATISTICAL ANALYSIS OF THE REMOTE RESULTS OF TREATMENT OF PATIENTS WITH MIXED TUMORS OF THE PAROTID GLAND -U-

AUTHOR--DARYALOVA, S.L., KUNIN, P.YE.

COUNTRY OF INFO--USSR

SOURCE--MEDITSINSKAYA RADIOLOGIYA, 1970, VOL 15, NR 3, PP 22-25

DATE PUBLISHED--------70

SUBJECT AREAS--BIOLOGICAL AND MEDICAL SCIENCES

TOPIC TAGS--TUMOR, SALIVARY GLAND, SURGERY, STATISTIC ANALYSIS

CONTROL MARKING--NO RESTRICTIONS

DOCUMENT CLASS--UNCLASSIFIED

PROXY REEL/FRAME--1985/1688 STEP NO--UR/0241/70/015/003/0022/0025

CIRC ACCESSION NO--AP0101743

UNCLASSIFIED

APPROVED FOR RELEASE: 09/17/2001 CIA-RDP86-00513R002201630004-3"

"APPROVED FOR RELEASE: 09/17/2001 CIA-RDP86-00513R002201630004-3

2/2 - 023 UNCLASSIFIED PROCESSING DATE--11SEP70

CIRC ACCESSION NO--AP0101743

ABSTRACT/EXTRACT--(U) GP-0- ABSTRACT. THE CHOICE OF OPTIMAL METHODS OF TREATING MIXED TUMORS OF THE PAROTID SALIVARY GLAND UP TILL THE PRESENT TIME REMAINS A MOOT QUESTION. THE AUTHORS CONDUCTED A COMPARATIVE ANALYSIS OF THE REMOTE RESULTS OF OPERATIVE AND COMBINED TREATMENT OF 90 PATIENTS WITH THESE NEOPLASMS. USE WAS MADE OF MATHEMATICAL ANALYSIS OF THE SURVIVAL OF PATIENTS, BASED ON THE SUPPOSITION THAT THE NUMBER OF PATIENTS ALIVE AS A FUNCTION OF TIME REPRESENTS A SUM OF SOME CONSTANT AND RECEDING EXPONENT. BY MEANS OF MATHEMATICAL ANALYSIS IS WAS ESTABLISHED THAT AFTER OPERATIVE TREATMENT OF MIXED TUMORS THERE WOULD BE NO RELAPSES IN 48 PER CENT AND AFTER COMBINED THERAPY IN 70 PERCENT OF CASES. IN THE SAME INSTANCES IF THE RELAPSES OCCUR, THEY WOULD DEVELOP IN ONE HALF OF PATIENTS SUBJECTED TO OPERATIVE TREATMENT IN 1.6 YEARS, WHEREAS AFTER COMBINED TREATMENT AFTER 7.7 YEARS. THUS, ANOTHER PROOF WAS OBTAINED OF THE ADVANTAGES OF THE COMBINED METHOD OF TREATING MIXED TUMORS OF THE PAROTID GLAND OVER THE OPERATIVE TECHNIQUE.

UNCLASSIFIED

APPROVED FOR RELEASE: 09/17/2001 CIA-RDP86-00513R002201630004-3"

"APPROVED FOR RELEASE: 09/17/2001 CIA-RDP86-00513R002201630004-3

USSR

UDC 621.3.035.4

SELIVERSTOV, V. P., MEL'NIKOV, A. M., TROFIMENKO, M. I., and KUNIN, T. I., (DECEASED)

"On the Question of Constructing Chlorous-Cupri-Magnesium Current Sources"

Ivanovo, Khimiya i Khimicheskaya Tekhnologiya, Vol 15, No 11, 1972, pp 1754-1756

Abstract: It is well known that the use of magnesium current sources with cathodes coated with CuCl is limited by their long period of activation and by not allowing high current densities. This work attempts to improve the characteristics of sources by changing their structure. The negative electrode was made of a magnesium alloy (MA-8), CuCl consisted of not less than 95% of the basic component. In the new current source the perforation of the conductor was increased for coated electrodes, and the position of the electrode in the model was reversed. The period of activation is reduced only to the time needed for the impregnation of the diaphragm. Cathode potential has a sufficiently positive value, and the elements are characterized by a high and stable tension/strain. A/h capacity increases by 18-20%. One condition or the attainment of these favorable electric characteristics is the exclusion of conductive

1/2

APPROVED FOR RELEASE: 09/17/2001 CIA-RDP86-00513R002201630004-3"

"APPROVED FOR RELEASE: 09/17/2001 CIA-RDP86-00513R002201630004-3

USSR

SELIVERSTOV, V. P., et al., Khimiya I khimicheskaya Tekhnologiya, Vol 15, No 11, 1972, pp 1754-1756

impurities from the active material. This variant of current sources allows a further improvement in the technological process of preparing current sources with Cu(1) chloride and significantly broadens the sphere of their use.

2/2

APPROVED FOR RELEASE: 09/17/2001 CIA-RDP86-00513R002201630004-3"

"APPROVED FOR RELEASE: 09/17/2001 CIA-RDP86-00513R002201630004-3

USSR

UDC 621.3.032.21

SELIVERSTOV, V. P., MEL'NIKOV, A. M., PLYUSHKOVA, V. S., TIKHOMIROVA, A. N., [redacted] (Deceased), Department of Electrochemical Production Processes, Ivanovo Institute of Chemical Technology

"Fabrication of Brush-on-Type and Molded Copper Chloride Cathodes for Magnesium Power Sources"

Ivanovo, Izvestiya vysshikh uchebnykh zavedeniy. Khimiya i Khimicheskaya tekhnologiya, vol 14, no 11, 1971, pp 1705-1708

Abstract: A new technique described is for making copper chloride-base active mass for brush-on-type positive electrodes designed for use in magnesium power sources as well as a method of fabricating molded porous copper-chloride cathodes based on the reduction of $CuCl_2 \cdot 2H_2O$ with a highly disperse dry copper powder. The experimental data indicate that the presence of chemical pure excess copper powder acts favorably on the efficiency of power sources. The cell voltage is increased by 15-30 mv and the activation period is decreased. The factors responsible for the

1/2

APPROVED FOR RELEASE: 09/17/2001 CIA-RDP86-00513R002201630004-3"

"APPROVED FOR RELEASE: 09/17/2001 CIA-RDP86-00513R002201630004-3

— SSR

SELIVERSTOV, V. P., et al, Izvestiya vysshikh uchebnykh zavedeniy. Khimiya i khimicheskaya tekhnologiya, Vol 14, No 11, 1971, pp 1705-1708

improved cell characteristics, other than the higher conductivity of the active mass, is the much higher dispersion of the copper chloride produced by the dry method. The latter aspect is the basis for making of molded positive porous electrodes. The porosity of the finished electrodes is rated at 56.4 percent against 35.7 percent in factory-made molded electrodes with graphite. The load potential is about the same in both; the cell voltage, however, is considerably higher and more stable with time. The efficiency of copper chloride is 95 percent. The effective utilization of the anodic material is increased by 9 percent. The pickup w/hr capacity at discharge to 1.2 v is increased by 20 percent. A contributing factor is the lower solubility of copper chloride on the electrode in the presence of higher porosity as well as the higher concentration of chloride ions in the electrolyte causing anode activation.

2/2

APPROVED FOR RELEASE: 09/17/2001 CIA-RDP86-00513R002201630004-3"

"APPROVED FOR RELEASE: 09/17/2001 CIA-RDP86-00513R002201630004-3

1/2 017 UNCLASSIFIED PROCESSING DATE--04DEC70

TITLE--POSSIBLE USE OF SODIUM, CALCIUM, AND COPPER,II CHLORIDES IN THE PRODUCTION OF COPPER,I CHLORIDE -U-

AUTHOR-(03)-UTKINA, I.N., KUNIN, T.J., SHUTOV, A.A.

COUNTRY OF INFO--USSR

SOURCE--IZV. VYSSH. UCHEB. ZAVED., KHIM. KHIM. TEKHNOL. 1970, 13(3), 437-9

DATE PUBLISHED-------70

SUBJECT AREAS--CHEMISTRY

TOPIC TAGS--SODIUM, CALCIUM, CHEMICAL PRODUCTION, COPPER CHLORIDE, SOLUBILITY, THERMAL EFFECT

CONTROL MARKING--NO RESTRICTIONS

DOCUMENT CLASS--UNCLASSIFIED

PROXY REEL/FRAME--3008/0622 STEP NO--UR/0153/70/013/003/0437/0439

CIRC ACCESSION NO--AT0137707

UNCLASSIFIED

APPROVED FOR RELEASE: 09/17/2001 CIA-RDP86-00513R002201630004-3"

"APPROVED FOR RELEASE: 09/17/2001 CIA-RDP86-00513R002201630004-3

2/2 017 UNCLASSIFIED PROCESSING DATE--04DEC70

CIRC ACCESSION NO--AT0137707

ABSTRACT/EXTRACT--(U) GP-0- ABSTRACT. THE SOLY. IN G-L. OF CUCL IN A SOLN. CONTG. 100 G NACL-L. IS 25 AT 25DEGREES AND 70 AT 95DEGREES; IN A SOLN. CONTG. 300 G NACL-L. THESE VALUES ARE 225 AND 350. SIMILARLY, IN A SOLN. CONTG. 100 G CACL SUB2-L., THE VALUES ARE 25 AND 60 G-L., AND IN 500 G CACL SUB2-L., THEY ARE 345 AND 430 G CUCL-L. CONSEQUENTLY, BECAUSE OF THE LARGE DIFFERENTIAL IN THIS TEMP. RANGE, NACL AND CACL SUB2 MAY BE USEFULLY APPLIED IN THE PRODN. OF CUCL. HOWEVER, FOR SOLNS. CONTG. 200-600 G CUCL SUB2-L., THE INCREASE IN SOLY. OF CUCL IS ONLY 20-23 G-L. ON INCREASING THE TEMP. FROM 25 TO 95DEGREES.

FACILITY: IVANOV. KHIM.-TEKHNOL. INST., IVANOVO, USSR.

UNCLASSIFIED

APPROVED FOR RELEASE: 09/17/2001 CIA-RDP86-00513R002201630004-3"

"APPROVED FOR RELEASE: 09/17/2001 CIA-RDP86-00513R002201630004-3

1/2 012 UNCLASSIFIED

TITLE--GAS CHROMATOGRAPHIC SEPARATION OF UNSATURATED HYDROCARBONS, USING SILVER NITRATE SOLUTIONS AS STATIONARY PHASES. 1. EFFECT OF OPERATING

PROCESSING DATE--11SEP70

AUTHOR--KUNINGAS, K., RANG, S., EYSEN, O.

COUNTRY OF INFO--USSR

SOURCE--EESTI NSV TEAD. AKAD. TIOM., KEEM., GEOL. 1970, 19(1), 30-5

DATE PUBLISHED--------70

SUBJECT AREAS--CHEMISTRY

TOPIC TAGS--STEMEOCHEMISTRY, CHEMICAL SEPERATION, ISOMER, MOLECULAR STRUCTURE, GAS CHROMATOGRAPHY, CHROMATOGRAPHIC SEPERATION, OCTANE, NONANE, DECANE, THERMAL EFFECT, ALIPHATIC ALKANE, ALIPHATIC ALKENE

CONTROL MARKING--NO RESTRICTIONS

DOCUMENT CLASS--UNCLASSIFIED

PROXY REEL/FRAME--1987/1067

STEP NO--UR/0470/70/019/001/0030/0035

CIRC ACCESSION NO--AP0104465

UNCLASSIFIED

APPROVED FOR RELEASE: 09/17/2001 CIA-RDP86-00513R002201630004-3"

"APPROVED FOR RELEASE: 09/17/2001 CIA-RDP86-00513R002201630004-3

UNCLASSIFIED PROCESSING DATE--11SEP70

2/2 012

CIRC ACCESSION NO--AP0104465

ABSTRACT/EXTRACT--(U) GP-0- ABSTRACT. THE GAS CHROMATOGRAPHIC SEPNS. OF GEOMETRIC ISOMERS OF C SUB8 MINUS SUB13 STRAIGHT CHAIN ALKENES, BY USING AGNO SUB3 SOLNS. (IN ETHYLENE GLYCOL, DIETHYLENE GLYCOL, POLYETHYLENE GLYCOL 400 (I), DECANE,1,10,DIOL, HEXANE,1,6,DIOL, BUTANE,1,4,DIOL (II), BUTANE,1, 3,DIOL, BUTANE,2,3,DIOL, OR 2,BUTENE,1,4,DIOL) AS THE STATIONARY PHASES, WAS STUDIED. CHROMOSORB SUPPORTS, HE CARRIER GAS, AND A THERMAL COND. DETECTOR WERE USED. THE EFFECTS OF THE SAMPLE SIZE, TEMP., AND THE HE FLOW RATE ON THE COLUMN PERFORMANCE ARE DISCUSSED. COLUMNS CONTG. AGNO SUB3 IN I OR IN II GAVE THE BEST SEPNS. OPTIMUM TEMPS. WERE 40-60DEGREES, 60-80DEGREES, AND 80-100DEGREES FOR ISOMERS OF C SUB8 MINUS SUB9, C SUB10 MINUS SUB11, AND C SUB12 MINUS SUB13 ALKENES, RESP. RELATIVE ERRORS WERE LESS THAN OR EQUAL TO 3.5PERCENT FOR THE ANAL. OF SYNTHETIC DECENE AND DODECENE ISOMERIC MIXTS. ON AN AGNO SUB3-II COLUMN AT 80 AND 100DEGREES, RESP.

UNCLASSIFIED

APPROVED FOR RELEASE: 09/17/2001 CIA-RDP86-00513R002201630004-3"

"APPROVED FOR RELEASE: 09/17/2001 CIA-RDP86-00513R002201630004-3

1/2 012 UNCLASSIFIED PROCESSING DATE--11SEP70

TITLE--GAS CHROMATOGRAPHIC SEPARATION OF UNSATURATED HYDROCARBONS, USING SILVER NITRATE SOLUTIONS AS STATIONARY PHASES. 1. EFFECT OF OPERATING

AUTHOR--KUNINGAS, K., RANG, S., EYSEN, O.

K

COUNTRY OF INFO--USSR

SOURCE--EESTI NSV TEAD. AKAD. TIOM., KEEM., GEOL. 1970, 19(1), 30-5

DATE PUBLISHED-------70

SUBJECT AREAS--CHEMISTRY

TOPIC TAGS--STEMEOCHEMISTRY, CHEMICAL SEPERATION, ISOMER, MOLECULAR STRUCTURE, GAS CHROMATOGRAPHY, CHROMATOGRAPHIC SEPERATION, OCTANE, NONANE, DECANE, THERMAL EFFECT, ALIPHATIC ALKANE, ALIPHATIC ALKENE

CONTROL MARKING--NO RESTRICTIONS

DOCUMENT CLASS--UNCLASSIFIED

PROXY REEL/FRAME--1987/1067 STEP NO--UR/0470/70/019/001/0030/0035

CIRC ACCESSION NO--AP0104465

UNCLASSIFIED

APPROVED FOR RELEASE: 09/17/2001 CIA-RDP86-00513R002201630004-3"

"APPROVED FOR RELEASE: 09/17/2001 CIA-RDP86-00513R002201630004-3

2/2 012 UNCLASSIFIED PROCESSING DATE--11SEP70

CIRC ACCESSION NO--AP0104465

ABSTRACT/EXTRACT--(U) GP-0- ABSTRACT. THE GAS CHROMATOGRAPHIC SEPNS. OF GEOMETRIC ISOMERS OF C SUB9 MINUS SUB13 STRAIGHT CHAIN ALKENES, BY USING AGNO SUB3 SOLNS. (IN ETHYLENE GLYCOL, DIETHYLENE GLYCOL, POLYETHYLENE GLYCOL 400 (I), DECANE,1,10,DIOL, HEXANE,1,6,DIOL, BUTANE,1,4,DIOL (II), BUTANE,1, 3,DIOL, BUTANE,2,3,DIOL, OR 2,BUTENE,1,4,DIOL) AS THE STATIONARY PHASES, WAS STUDIED. CHROMOSORB SUPPORTS, HE CARRIER GAS, AND A THERMAL COND. DETECTOR WERE USED. THE EFFECTS OF THE SAMPLE SIZE, TEMP., AND THE HE FLOW RATE ON THE COLUMN PERFORMANCE ARE DISCUSSED. COLUMNS CONTG. AGNO SUB3 IN I OR IN II GAVE THE BEST SEPNS. OPTIMUM TEMPS. WERE 40-60DEGREES, 60-80DEGREES, AND 80-100DEGREES FOR ISOMERS OF C SUB8 MINUS SUB9, C SUB10 MINUS SUB11, AND C SUB12 MINUS SUB13 ALKENES, RESP. RELATIVE ERRORS WERE LESS THAN OR EQUAL TO 3.5PERCENT FOR THE ANAL. OF SYNTHETIC DECENE AND DODECENE ISOMERIC MIXTS. ON AN AGNO SUB3-II COLUMN AT 80 AND 100DEGREES, RESP.

UNCLASSIFIED

APPROVED FOR RELEASE: 09/17/2001 CIA-RDP86-00513R002201630004-3"

"APPROVED FOR RELEASE: 09/17/2001 CIA-RDP86-00513R002201630004-3

UNCLASSIFIED PROCESSING DATE--[illegible]

1/2 010

TITLE--GAS CHROMATOGRAPHIC SEPARATION OF UNSATURATED HYDROCARBONS USING AGNO SUB3 SOLUTIONS AS STATIONARY PHASES. 2. THE EFFECT OF SOLVENT AND

AUTHOR-(03)-KANG, S., EISEN, O., KUNINGAS, K.

K

COUNTRY OF INFO--USSR

SOURCE--IZVESTIYA AKADEMII NAUK ESTONSKOY SSR, KHIMIYA, GEOLOGIYA, 1970, VOL 19, NR 2, PP 99-103

DATE PUBLISHED--------70

SUBJECT AREAS--CHEMISTRY

TOPIC TAGS--GAS CHROMATOGRAPHY, UNSATURATED HYDROCARBON, SILVER NITRATE, SOLVENT ACTION

CONTROL MARKING--NO RESTRICTIONS

DOCUMENT CLASS--UNCLASSIFIED

STEP NO--UR/0470/70/019/002/0099/0103

PROXY REEL/FRAME--1992/1554

AP0112548

UNCLASSIFIED

APPROVED FOR RELEASE: 09/17/2001 CIA-RDP86-00513R002201630004-3"

"APPROVED FOR RELEASE: 09/17/2001 CIA-RDP86-00513R002201630004-3

2/2 010 UNCLASSIFIED PROCESSING DATE--02OCT70

CIRC ACCESSION NO--AP0112548

ABSTRACT/EXTRACT--(U) GP-0- ABSTRACT. IN OUR PREVIOUS WORK, EFFECTS OF WORKING PARAMETERS ON COLUMN EFFICIENCY WERE DISCUSSED (PRIME1). IN THE PRESENT PAPER, EFFECTS OF SOLVENT AND OF AGNO SUB3 CONCENTRATION ON COLUMN SELECTIVITY ARE REPORTED. THE REAGENTS, APPARATUS AND PROCEDURE ARE DESCRIBED IN (PRIME1).

UNCLASSIFIED

APPROVED FOR RELEASE: 09/17/2001 CIA-RDP86-00513R002201630004-3"

"APPROVED FOR RELEASE: 09/17/2001 CIA-RDP86-00513R002201630004-3

USSR UDC 669-138+621.79

BOROK, B. A., SHCHEGOLEVA, R. P., GOLUBEVA, L. S., CHEROVSKAYA, Z. N., CHIKUNOV, M. I., and KUNIS, M. I., Central Scientific Research Institute of Ferrous Metallurgy imeni I. P. Bardin

"Production Technology of Nickel-Base Brazing Alloys in Powder Form"

Kiev, Poroshkovaya metallurgiya, No 2, May 72, pp 82-88

Abstract: The objective of the study was to develop an optimum production technology for Ni-base alloys in powder form for brazing structures from thin-sheet high-alloy steels. The test materials were powders of PG12N75SR-grade Ni-Cr-Si-Fe-B brazing alloy and GMA--a mixture of 85% of PG12N75SR with 15% molybdenum. PG12N75SR was successfully used to braze 0Kh18N10, 1Kh18NT, and Kh25N16G7AR high-alloy steels. The brazing temperature was 1180°C and the secondary melting (unsoldering) temperature--1080°C. Addition of molybdenum (15%) to Kh25N16G7SR was found to raise the unsoldering temperature by 130°C and ensure a joint tensile strength of 30 kg/mm². (1 illustration, 7 tables, 6 bibliographic references)

1/1

APPROVED FOR RELEASE: 09/17/2001 CIA-RDP86-00513R002201630004-3"

"APPROVED FOR RELEASE: 09/17/2001 CIA-RDP86-00513R002201630004-3

Epidemiology

UDC 59:616.981.455(574.52)

USSR

AYKIMBAYEV, M. A., KORNEYEV, G. A., KUNITSA, G. M., TLEUGABYLOV, M. K., TRYKIN, V. S., SKVORTSKOVA, S. S., KUZIN, I. P., and SURMIN, V. M., Central-Asian Scientific Research Antiplague Institute, Alma-Ata

"A Tugai Focus of Tularemia in Dzhambulskaya Oblast in the Lower Chu Flow"

Moscow, Zoologicheskiy Zhurnal, Vol 50, No 10, 1971, pp 1595-1598

Abstract: Rhipicephalus pumilio, the tick which carries and transmits tularemia bacteria, can circulate the bacteria over a long time-span due to its ability to parasitige hares and other rodents at all stages of its development. The flooded fields in this region, on which cattle graze, create ideal conditions for the spread of the ixodid tick. Dermacentor daghestanicus is the dominant species because of its high percentage of infection by tularemia bacteria and because it preserves the bacteria in its body for a long period. Bacteriological studies were made of 117 mammals and 19,000 ticks of various species. In infected hares pathological-anatomic changes were manifested by enlargement of the spleen, in some cases by a change in the color and texture of the liver, and by the characteristic mound arrangement of cocci-bacteria in the spleen, liver, lungs, lymph nodes, and blood. 30 strains of Pasteurella tularensis were found in ixodid ticks and 7 strains, in the hare (Lepus tolai). These strains decompose glycerine and circulate in the tugai focus.

1/1

APPROVED FOR RELEASE: 09/17/2001 CIA-RDP86-00513R002201630004-3"

"APPROVED FOR RELEASE: 09/17/2001 CIA-RDP86-00513R002201630004-3

KUNITSA, G. M.

JPRS 55918

8 May 1972

UDC 576.851.45.09

BIOCHEMICAL CHARACTERISTICS OF FRANCISELLA TULARENSIS STRAINS OF THE CENTRAL ASIAN GEOGRAPHIC RACE

[Article by G. M. Kunitsa, M. A. Aykisbayev, et al., Central Asian Plague Research Institute, and Institute of Epidemiology and Microbiology im. Gamaleya; USSR Academy of Medical Sciences; Moscow, Zhurnal Mikrobiologii, Epidemiologii i Immunobiologii, Russian, No 2, 1972, submitted 20 July 1970, pp 124-127]

Two geographic races of Francisella tularensis are known to exist at present in the Soviet Union, the holarctic (Olsuf'yev, 1968, 1970) and the Central Asian (Aykisbayev, 1966). The former is unable to ferment glycerin or split citrulline, whereas the latter ferments glycerin and contains the enzyme citrullinureidase. However, the two races differ little from one another (they are virtually apathogenic for rabbits) in other biological characteristics, specifically, in pathogenicity for laboratory animals.

The purpose of this study was to determine the biochemical activity of 17 F. tularensis strains of the Central Asian geographic race isolated mainly from bares and ticks in a natural focus of the tugale type in Dzambulskaya Oblast in the Chu river valley and in the Ili and Amu-Dar'ya river valleys. Two typical strains of the holarctic race were studied for purposes of comparison.

Two methods were employed to determine fermentative activity: (i) Downs' method (Downs and Bond, 1935), normally used to study the biochemical activity of F. tularensis, but in Tomel'yanova's modification (1964) and (ii) Friedemann's method (Friedemann et al., 1942) in Rodionova's modification (1966).

Downs' method does not, of course, permit any quantitative assessment of the ability of different strains to split a given substrate. Moreover, it may be unsuitable if a strain possesses weak activity or if there are two fermentative processes that mask the final effect of the reaction. Accordingly, we thought it worthwhile to study biochemical activity at some intermediate stage in the oxidation of sugar or alcohol and not to record only

[I - USSR - C]

APPROVED FOR RELEASE: 09/17/2001 CIA-RDP86-00513R002201630004-3"

"APPROVED FOR RELEASE: 09/17/2001 CIA-RDP86-00513R002201630004-3

Acc. Nr. AA0108180 Abstracting Service: CHEMICAL ABST. 6-70

Ref. Code UR 0482

6

K

135549t Steel. Ozerskii, A. D.; Solntsev, Yu. P.; Galkin, M. F.; Myagkov, V. V.; Vladimirov, N. E.; Yurasov, S. A.; Nikonov, V. F.; Yakovenko, A. F.; Parfenovskii, A. B.; Kunitia, S. S. U.S.S.R. 260,899 (Cl. C 22c), 06 Jan 1970, Appl. 02 Dec 1968; From *Otkrytiya, Izobret., Prom. Obrazcy. Tovarnye Znaki* 1970, 47(4), 81. Steel with improved mech. properties consisted of: C 0.40–0.45, Si 0.5–0.7; Mn 0.5–0.8, Cr 1.5–1.8, V 0.3–0.5, Mo 0.9–1.2, impurities of S <0.03, and P <0.03%, and Fe the remainder. MSCL

1/1

REEL/FRAME

19891846

18 cp

APPROVED FOR RELEASE: 09/17/2001 CIA-RDP86-00513R002201630004-3"

"APPROVED FOR RELEASE: 09/17/2001 CIA-RDP86-00513R002201630004-3

UDC: 621.375.421

USSR

MIGONIS, R. P., KUNITSKIS, N. Ya.

"Effect of Phase-Amplitude Response on the Distortions in Single-Band Amplifiers"

Tr. Nauchn.-tekhn. konferentsii "Radioelektronika". T. 6 (Works of the Scientific and Technical Conference on Radio Electronics. Vol. 6), Kaunas, 1970, pp 29-32 (from RZh-Radiotekhnika, No 5, May 71, Abstract No 5D26)

Translation: The paper presents the results of studies of the effect which the phase-amplitude characteristic has on distortions of single-band signals in linear amplifiers. Resumé.

1/1

APPROVED FOR RELEASE: 09/17/2001 CIA-RDP86-00513R002201630004-3"

"APPROVED FOR RELEASE: 09/17/2001 CIA-RDP86-00513R002201630004-3

UDC 530.12:531.18+538.3

USSR

KUNITSKIY, R. V.

"Light Aberration and the Theory of Relativity"

V sb. Probl. astron. i geod. (Problems of Astronomy and Geodesy -- Collection of Works), Moscow, Nauka Press, 1970, pp 79-82 (from RZh-Fizika, No 2, Feb 71, Abstract No 2B106)

Translation: Attention is given to the fact that from the point of view of astronomical observations, the variation of motion of a light source has no effect on the magnitude of the aberration shift of the stars, which varies only with variation of movement of the observer. This observed fact has been considered unexplained up to now in the special theory of relativity, inasmuch as complete identity of two cases is assumed in the latter: the moving light source with a stationary observer and a stationary light source with a moving observer. A critical examination of a number of papers on astronomy connected with efforts to explain this phenomenon within the framework of the special theory of relativity is presented. In particular, the author criticizes the point of view according to which the classical definition of light aberration does not depend on the assumption of movement

1/2

APPROVED FOR RELEASE: 09/17/2001 CIA-RDP86-00513R002201630004-3"

"APPROVED FOR RELEASE: 09/17/2001 CIA-RDP86-00513R002201630004-3

USSR

KUNITSKIY, R. V., Probl. astron. i geod. (Problems of Astronomy and Geodesy -- Collection of Works), Moscow, Nauka Press, 1970, pp 79-82 (from RZh-Fizika, No 2, Feb 71, Abstract No 2B106)

of the source and, consequently, the special theory of relativity is not faced with the problem of explaining the observed astronomical fact. Accordingly, the conclusion is drawn that it is "necessary to complete the work on the phenomenon of light aberration from the points of view of relativity theory."

2/2

7433
CSO: 1862-W

- END -

APPROVED FOR RELEASE: 09/17/2001 CIA-RDP86-00513R002201630004-3"

"APPROVED FOR RELEASE: 09/17/2001 CIA-RDP86-00513R002201630004-3

AA0038808

UR 0482

Soviet Inventions Illustrated, Section I Chemical, Derwent, P-70

238027/INDUSTRIAL INDUCTION FURNACE has a primary coil which is so designed that it serves at the same time as a sealed furnace casing: Coil 1 is a copper tube and its turns 2 are wrapped with glass mica tape. The finished coil is placed between two plates of glass textolite 3,4, and held together by tie rods. A layer of epoxy resin and glass fibre cloth is then applied to the outer surface, and allowed to polymerise. Cover and bottom 8,9, of the finished furnace are also lined with glass textolite. 18.5.62. as 778519/24-7. B.P.LOBASHEV et alia. (4.7.69.) Bul.9/20.2.69. Class 21h, Int Cl. H05b.

18

AUTHORS: Lobashev, B. P.; Kunitskiy, V. N.; Spetsovskiy, M. N.; and Fomin, A. A.

19740016

APPROVED FOR RELEASE: 09/17/2001 CIA-RDP86-00513R002201630004-3"

"APPROVED FOR RELEASE: 09/17/2001 CIA-RDP86-00513R002201630004-3

AA0038808

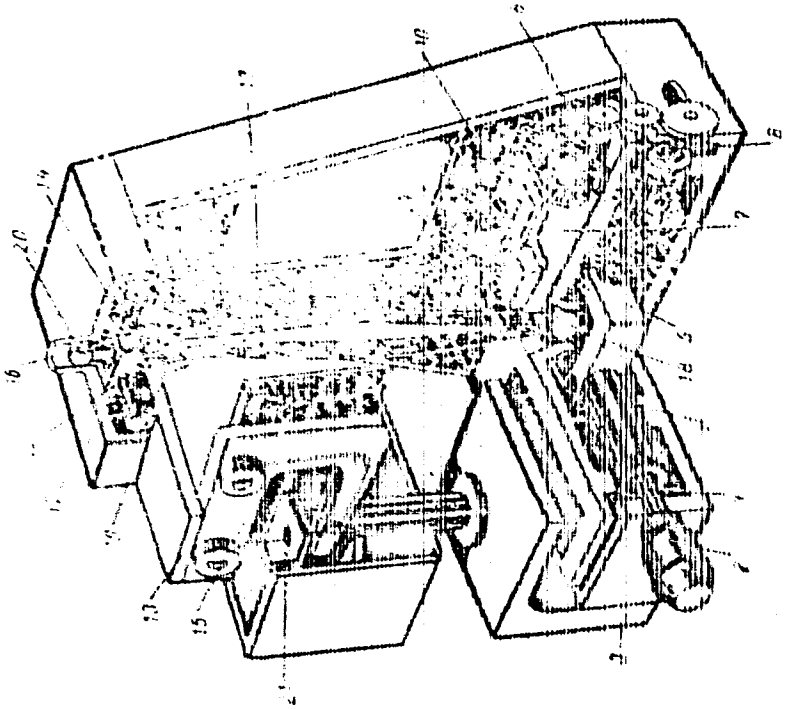

19740017

APPROVED FOR RELEASE: 09/17/2001 CIA-RDP86-00513R002201630004-3"

"APPROVED FOR RELEASE: 09/17/2001 CIA-RDP86-00513R002201630004-3

USSR

K

KUNITSKIY, Yu., and [illegible], L.

"Fourth Conference of Graduate Students and Young Researchers at the Institute for Problems of Material Science, Academy of Sciences UKR SSR"

Kiev, Poroshkovaya Metallurgiya, No 7, Jul 70, pp 105-10[illegible]

Abstract: The Fourth Conference of Graduate Students and Young Researchers at the Institute for Problems of Material Science, Academy of Sciences UKR SSR, was sponsored by the Council of Young Researchers and the Graduate Students' Bureau of Refractory Compounds. In his opening address, Prof. [illegible], Corresponding Member of the Ukrainian Academy of Sciences noted the variety of topics and trends of reports as well as the great popularity of [illegible] conferences, demonstrating the obvious benefit of sharing ideas by young scientists. [illegible] 100 reports were presented at the three sections of the [illegible] by representatives of Kiev, Moscow, Zaporozh'ye, Dnepropetrovsk, and [illegible]. [illegible] topics of the reports at the plenary session were: hot extension of [illegible] metals (Petrykina, R. Ya.); physical properties of carbides in the [illegible] region (Naumenko, V. Ya.); theory and technology of electrospark [illegible] (Verkhoturov, A. D.); new antifriction multi-layer material (Kovalenko, [illegible]); causes of power-energy stability of atomic states in the condensed phase

1/3

APPROVED FOR RELEASE: 09/17/2001 CIA-RDP86-00513R002201630004-3"

"APPROVED FOR RELEASE: 09/17/2001 CIA-RDP86-00513R002201630004-3

USSR

KUNITSKIY, [illegible], and PERESELENTSEVA, L., Poroshkovaya Metallurgiya, [illegible],
pp 105-106

(Pryadko, L. F.). The first section of the conference heard reports [illegible] following topics: physical properties of carbohydrides ([illegible]); electron [illegible] fine structure of deformed carbides (S. A. Bozhko); electron [illegible]; valence and conductivity bands of superconductive compounds ([illegible]); chemical stability of titanium carbides in the homogeneity region ([illegible]); [illegible] S. A.); electron spectrum of some dodecaborides (Odintsov, V. V.); [illegible] properties of low-alloy titanium- and zirconium-base alloys and the [illegible] diborides of transition metals (Kovenskaya, B. A.). Some of the [illegible] sented at the second section were: nitriding transition metals of [illegible] groups and determining the kinetics of growth of the diffusion layer [illegible] G. S.); unique method of obtaining high-porosity products of [illegible] from transition metal carbides (Pochkay, G. N.); compatibility of [illegible] borides, and silicides with transition metals (Yarchenko, [illegible]); effect of phosphides on structures and properties of hyper[illegible] V. I.); effect of phosphides on structures and properties of hyper[illegible] Silumins (Sil'chenko, G. V.). At the third section the emphasis was [illegible] on problems of the testing of materials. Some of the topics on [illegible] effect of the structure of boride coatings on wear resistance (Polotay, [illegible]);

2/3

APPROVED FOR RELEASE: 09/17/2001 CIA-RDP86-00513R002201630004-3"

"APPROVED FOR RELEASE: 09/17/2001 CIA-RDP86-00513R002201630004-3

USSR

KUNITSKIY, Yu., and [illegible], L., Poroshkovaya Metallurgiya, No 7, [illegible],
pp 105-106

microhardness anisotropy of transition metal carbides ([illegible], Yu. [illegible]); structure and properties of sintered materials of gas turbine parts ([illegible], [illegible]); flammability of powders and propagation velocity of a flame in a sample of air (Tsidelko, T. I., Barlas, R. A., and Shapoval, A. V.); and potential use of refractory semiconductor compounds of transition and rare earth metals for semiconductor equipment.

3/3

APPROVED FOR RELEASE: 09/17/2001 CIA-RDP86-00513R002201630004-3"

"APPROVED FOR RELEASE: 09/17/2001 CIA-RDP86-00513R002201630004-3

UDC 669.018.4:53

USSR

SAMSONOV, G. V., KUNITSKIY, YU. A., and KOSENKO, V. A., Institute of Problems of Material Science, Academy of Sciences UkrSSR

"Electric Resistance of Iron, Cobalt, and Nickel Borides"

Sverdlovsk, Fizika Metallov i Metallovedeniye, Vol 33, No 4, Apr 72, pp 884-887

Abstract: The temperature dependences of the electric resistance ρ of borides of metals of the iron family were experimentally investigated in the 20-1000°C temperature range. The initial materials for the synthesis of borides were powders of metals (99.95% purity) and boron (99.79% purity). The electric resistance was measured on 12-14 mm-long specimens 8 mm in diameter. The results, shown in diagrams of $\rho = f(T)$ for the boride phase systems Fe-B, Co-B, and Ni-B, are discussed from the viewpoints of structural and electronic formations of the systems. The effect of increased boron content on ρ, T, and the magnetic moment of iron and cobalt borides is compared with the character of $\rho = f(T)$-curves of nickel borides. One illustration, one table, nineteen bibliographic references.

1/1

APPROVED FOR RELEASE: 09/17/2001 CIA-RDP86-00513R002201630004-3"

"APPROVED FOR RELEASE: 09/17/2001 CIA-RDP86-00513R002201630004-3

UDC 621.375.13:621.391.822

USSR

KOZACHOK, A. G., KUNOV, V. M.

"Method of Calculating the Noise Parameters of Amplifiers with Feedback"

Moscow, Elektrosvyaz', No 6, 1971, pp 45-50

Abstract: A method of calculating the noise parameters of amplifiers with feedback is developed. The method is suitable for cases where the amplifier and the feedback circuit are three-terminal networks with connected common sides. In practice, the amplifier circuits do not always satisfy this condition, but the method permits discovery of the effect of the four basic types of feedback on the noise characteristics of the amplifier. The interrelation between the noise parameters of an amplifier without feedback and with feedback can be established by the relations obtained for the four basic types of feedback. The application of these relations is illustrated by an example of series feedback with respect to voltage.

All types of feedback change the noise characteristics of the amplifier even if the noise of the feedback circuit is neglected. Analysis of frequency-independent feedback with respect to voltage shows that in this case it is possible to encompass the amplifier in a deep feedback circuit by proper selection of the feedback circuit elements without worsening the noise characteristics of the amplifier.

APPROVED FOR RELEASE: 09/17/2001 CIA-RDP86-00513R002201630004-3"

"APPROVED FOR RELEASE: 09/17/2001 CIA-RDP86-00513R002201630004-3

Acc. Nr: AP0036559

Abstracting Service: CHEMICAL ABST. 4/70

Ref. Code: UR 0366

K

78319s Reaction of nitrosyl chloride with unsaturated compounds. XXIX. Cleavage of nitroso chlorides of some vinyl ethers. Ogloblin, K. A.; Kunovskaya, D. M. (Leningrad. Gos. Univ., Leningrad, USSR). Zh. Org. Khim. 1970, 6(1), 40-2 (Russ). The reaction of $Me_2C{:}CHOR$ (R is Me, Et, or Bu) with NOCl in Et_2O at −60° gives deep blue $Me_2C(NO)CH(OR)$-Cl (I), which decomp. at room temp. and cannot be isolated. The addn. of ROH (R as above) to the cold reaction mixt. gives $Me_2C{:}NOH$ (II), $CH(OR)_3$ (III), RCl, and HCO_2R as the end products. Evidently I + ROH → $Me_2C(NO)CH(OR)_2$ (IV) + HCl; I + ROH + HCl → $Me_2C(N{:}O\ldots H^+)CH(OR)Cl$ → II + $HC^+(OR)Cl$ (V); V + 2ROH → III + RCl + HCO_2R. Also, I react with RONa to give IV directly, which are decompd. with dry HCl to II. CPJR

1/1

ALS

7

REEL/FRAME 19721411

APPROVED FOR RELEASE: 09/17/2001 CIA-RDP86-00513R002201630004-3"

"APPROVED FOR RELEASE: 09/17/2001 CIA-RDP86-00513R002201630004-3

Acc. Nr.: AP0029570 Ref. Code: UR 0297

PRIMARY SOURCE: Antibiotiki, 1970, Vol. 15, Nr 1, pp 59-63

ANTITUMOR ANTIBIOTIC TAVROMYCETIN, ITS EFFECT ON ORGANS AND BLOOD OF EXPERIMENTAL ANIMALS, DISTRIBUTION AND EXCRETION

Vertogradova, T.P.; Kunrat, I.A.; Muravayevskaya, V.S.

Institute for New Antibiotics, Academy of Medical Sciences of the USSR, Moscow

The paper presents data on the effect of tavromycetin on the organs and blood of experimental animals, its distribution in tissues and excretion. It was found that tavromycetin used in toxic doses affected the liver and the kidneys of the animals, decreased the erythrocyte and hemoglobin counts in the peripheral blood and induced trombocytopenia. After intravenous administration 0.5 per cent of the antibiotic was excreted with urine and 4—5 per cent with bile. After oral administration 0.8—1 per cent of the antibiotic was excreted with bile and no antibiotic was detected in urine

REEL/FRAME

19681200

APPROVED FOR RELEASE: 09/17/2001 CIA-RDP86-00513R002201630004-3"

"APPROVED FOR RELEASE: 09/17/2001 CIA-RDP86-00513R002201630004-3

1/2 022 UNCLASSIFIED PROCESSING DATE--30OCT70

TITLE--PENICILLIN SENSITIVITY OF GONOCOCCI AND ITS ROLE IN CLINICS AND THERAPY OF WOMAN GONORRHEA -U-

AUTHOR-(03)-CHASTIKOVA, A.V., STAROSTINA, Z.D., KUNTSEVICH, L.D.

COUNTRY OF INFO--USSR

SOURCE--ANTIBIOTIKI, 1970, VOL 15, NR 6, PP 561-564

DATE PUBLISHED--------70

SUBJECT AREAS--BIOLOGICAL AND MEDICAL SCIENCES

TOPIC TAGS--VENEREAL DISEASE, GYNECOLOGY, PENICILLIN, DRUG SENSITIVITY, ANTIBIOTIC, DRUG RESISTANCE, STREPTOMYCIN, TETRACYCLINE, LEVOMYCETIN

CONTROL MARKING--NO RESTRICTIONS

DOCUMENT CLASS--UNCLASSIFIED

PROXY REEL/FRAME--3001/0999 STEP NO--UR/0297/70/015/006/0561/0564

CIRC ACCESSION NO--AP0126641

UNCLASSIFIED

APPROVED FOR RELEASE: 09/17/2001 CIA-RDP86-00513R002201630004-3"

"APPROVED FOR RELEASE: 09/17/2001 CIA-RDP86-00513R002201630004-3

2/2 022 UNCLASSIFIED PROCESSING DATE--22OCT70

CIRC ACCESSION NO--AP0126641

ABSTRACT/EXTRACT--(U) GP-0- ABSTRACT. SENSITIVITY OF GONOCOCCI TO PENICILLIN WAS STUDIED ON 252 FEMALE CASES WITH VARIOUS FORMS OF GONORRHEA. GONOCOCCAL SUSCEPTIBILITY TO PENICILLIN WAS ESTIMATED WITH THE METHOD OF SERIAL DILUTIONS AND THAT TO PENICILLIN, LEVOMYCETIN, STREPTOMYCIN, CHLORTETRACYCLINE AND OXYTETRACYCLINE BY THE METHOD OF PAPER DISCS. IN 1966 TO 1969 STRAINS WITH DECREASED SENSITIVITY TO PENICILLIN (AT LEAST 0.1 UNITS) WERE ISOLATED FROM 14.7 PERCENT OF FEMALE CASES SUFFERING FROM GONORRHEA. NO CORRELATION BETWEEN THE SENSITIVITY LEVELS OF GONOCOCCI TO PENICILLIN, THE STAGE OF THE DISEASE AND ITS PROGRESSION WAS FOUND, HOWEVER, STRAINS WITH DECREASED SENSITIVITY WERE ISOLATED FROM CASES WITH ASCENDING PROCESSES TWICE AS FREQUENTER, THAN FROM CASES WITH GONORRHEA OF THE LOWER PART OF THE UROGENITAL ORGANS. IT WAS SHOWN THAT DEVELOPMENT OF RESISTANCE TO PENICILLIN IN GONOCOCCI WAS LARGELY DUE TO PREVIOUS TREATMENT OF THE DISEASE WITH INSUFFICIENT DOSES OF THE DRUG. THE RESULTS OF THE TREATMENT DEPENDED ON THE HOST REACTIVITY AND THE SENSITIVITY LEVELS OF GONOCOCCI TO THE ANTIBIOTICS. COMPARISON OF THE DATA OF THE GONOCOCCAL SENSITIVITY TO PENICILLIN OBTAINED WITH THE TWO METHODS, THAT IS SERIAL DILUTIONS AND PAPER DISCS SHOWED FREQUENT DEVIATIONS. THE METHOD OF SERIAL DILUTIONS IS SUPPOSED TO BE MOST EXPEDIENT FOR DETERMINATION OF GONOCOCCAL SENSITIVITY TO PENICILLIN. FACILITY: GORKY INSTITUTE FOR SKIN AND VENERIAL INFECTIONS, MZ RSFSR.

UNCLASSIFIED

APPROVED FOR RELEASE: 09/17/2001 CIA-RDP86-00513R002201630004-3"

"APPROVED FOR RELEASE: 09/17/2001 CIA-RDP86-00513R002201630004-3

USSR

UDC 548.1

BELOV, N. V., and KUNTSEVICH, T. S., Gor'kiy Physicotechnical Research Institute

"Maximal Symmetry Point Groups in R3 and R4"

Moscow, Kristallografiya, Vol 16, No 5, Sep-Oct 71, pp 1022-1023

Abstract: The article considers the question whether both "tops" (cubic and hexagonal) of a three-dimensional crystal world converge in a four-dimensional crystal space; i.e., whether the maximal point groups O_h and D_{6h} are subgroups of some four-dimensional symmetry point group. The answer is obtained by considering four maximal symmetry point groups in R4 and comparing them with maximal groups in R3 (in the symbols of A. C. HURLEY). It is found that if the group O_h is a subgroup of the first four-dimensional group (of order 1152), the group D_{6h} will be a subgroup of the next two four-dimensional maximal groups (of order 288 and order 96). Hence it follows that the two three-dimensional crystallographic "tops" O_h and D_{6h} have no common origin in a space of four dimensions.

1/1

APPROVED FOR RELEASE: 09/17/2001 CIA-RDP86-00513R002201630004-3"

"APPROVED FOR RELEASE: 09/17/2001 CIA-RDP86-00513R002201630004-3

1/2 012 UNCLASSIFIED PROCESSING DATE--27NOV70

TITLE--FOUR DIMENSIONAL BRAVAIS LATTICES -U-

AUTHOR-(02)-KUNTSEVICH, T.S., BELOV, N.V.

COUNTRY OF INFO--USSR

SOURCE--KRISTALLOGRAFIYA 1970, 15(2), 215-29

DATE PUBLISHED--------70

SUBJECT AREAS--PHYSICS

TOPIC TAGS--CRYSTAL LATTICE STRUCTURE, CRYSTAL LATTICE ENERGY, CRYSTAL SYMMETRY

CONTROL MARKING--NO RESTRICTIONS

DOCUMENT CLASS--UNCLASSIFIED

PROXY REEL/FRAME--2000/1291 STEP NO--UR/0070/70/015/002/0215/0229

CIRC ACCESSION NO--AP0124942

UNCLASSIFIED

APPROVED FOR RELEASE: 09/17/2001 CIA-RDP86-00513R002201630004-3"

"APPROVED FOR RELEASE: 09/17/2001 CIA-RDP86-00513R002201630004-3

2/2 012 UNCLASSIFIED PROCESSING DATE--27NOV70

CIRC ACCESSION NO--AP0124942

ABSTRACT/EXTRACT--(U) GP-0- ABSTRACT. FOUR DIMENSIONAL BRAVAIS LATTICES ARE DISCUSSED FROM THE VIEWPOINT OF LIMITATIONS IMPOSED BY THE MACROSYMMETRY ELEMENTS UPON THE METRIC PROPERTIES OF THE LATTICE. FOUR NEW 4 DIMENSIONAL BRAVAIS LATTICES WERE FOUND, AND 2 WERE EXCLUDED FROM THE EXISTING LIST. FACILITY: GOR'K. ISSLED. FIZ.-TEKH. INST., GORKI, USSR.

UNCLASSIFIED

APPROVED FOR RELEASE: 09/17/2001 CIA-RDP86-00513R002201630004-3"

"APPROVED FOR RELEASE: 09/17/2001 CIA-RDP86-00513R002201630004-3

USSR

UDC 62-50:519.2

KUNTSEVICH, V. M. (Kiev)

ON THE SYNTHESIS OF OPTIMAL, SAMPLED-DATA, CONTROL SYSTEMS SUBJECT TO CONTINUOUS DISTURBANCES

Moscow AVTOMATIKA I TELEMEKHANIKA in Russian No 4, Apr 73 pp 60-69

/Abstract/ The article considers the problem of the synthesis of optimal systems subject to continuous disturbances. A solution of the problem is given for the case in which the disturbances are known a priori to belong to a certain class of time functions, but the parameters of these functions are not known. Techniques for restoring these hidden (from the system designer) parameters are described, as well as two methods of compensation for the disturbances (asymptotic compensation and compensation for a finite time). A correct solution of optimal control synthesis is given.

1/1

APPROVED FOR RELEASE: 09/17/2001 CIA-RDP86-00513R002201630004-3"

"APPROVED FOR RELEASE: 09/17/2001 CIA-RDP86-00513R002201630004-3

USSR

KUNTSEVICH, V. M.

"The Solution of One Problem of Synthesis of an Optimal, Discrete Control System"

Kiev, Kibernetika i Vychistel'naya Tekhnika, No 16, 1972, pp 4-10

Abstract: A method is studied for solving the problem of synthesis of closed, discrete control systems based on the condition of production of the maximum value of the first difference of the Lyapunov function when it is selected in the quadratic form. Since, for a nonlinear object, determination of the optimal control in this sense is reduced to solution of a nonlinear control, the influence of the duration of the iteration method of determination of the value of the optimal control at each step of the operation of the system on its quality and stability is analyzed. Sufficient conditions of stability are produced for certain control classes.

1/1

APPROVED FOR RELEASE: 09/17/2001 CIA-RDP86-00513R002201630004-3"

"APPROVED FOR RELEASE: 09/17/2001 CIA-RDP86-00513R002201630004-3

USSR

UDC 669.71:548.53

BOCHVAR, O. S., ORLOVA, A. I., KUNYAVSKAYA, T. N., SOLODOVA, V. F.

"Kinetics of Technical Aluminum Recrystallization Process"

V sb. Struktura i svoystva legk. splavov (Structure and Properties of Light Alloys -- collection of works), Moscow, Nauka Press, 1971, pp 48-61 (from RZh-Metallurgiya, No 4, Apr 72, Abstract No 4I626)

Translation: A study was made of the effect of the chemical composition and annealing conditions on the kinetics of the process of recrystallization of technical aluminum sheets type AD00 (99.7% Al) and AD1 (99.4% Al). The sheets 2 mm thick were obtained by the method of roll rolling from ingots with globular macrostructure homogenized at 560° for 24 hours with a 300 × 1,200 mm cross section cast by the continuous casting method. Hot deformation of the ingots was done at 400-360° with a total degree of deformation of 96.5%. Cold deformation was carried out with a degree of deformation of 80% without intermediate annealing. The kinetic curves were constructed for 200-600° every 50°. The controllable properties were σ_B, $\sigma_{0.2}$, and δ. The isochrons σ_B and δ were constructed for holding 10 and 60 minutes. The characteristic microstructures of the annealed specimens of sheet technical aluminum of two compositions are presented. The process of recrystallization of the cold-rolled AD00 and AD1 aluminum

1/2

APPROVED FOR RELEASE: 09/17/2001 CIA-RDP86-00513R002201630004-3"

"APPROVED FOR RELEASE: 09/17/2001 CIA-RDP86-00513R002201630004-3

USSR

BOCHVAR, O. S., et al., Struktura i svoystva legk. splavov, Moscow, Nauka Press, 1971, pp 58-61

develops as recrystallization in situ. The difference in the kinetics of the recrystallization process is caused by different type of substructure arising during the process of polygonization at increased temperatures. The consequence of the different dislocation structure of the cold-rolled aluminum is a different mechanism of the polygonization process at increased temperatures. This different dislocation structure is, in turn, caused by a different nature of the phases and degree of heterophase nature of the initial structure of the ingot. Three illustrations and a 7-entry bibliography.

2/2

APPROVED FOR RELEASE: 09/17/2001 CIA-RDP86-00513R002201630004-3"

"APPROVED FOR RELEASE: 09/17/2001 CIA-RDP86-00513R002201630004-3

USSR UDC 669.71.018.29.621.785.362

BOCHVAR, O. S., KUNYAVSKAYA, T. M., KIRPA, I. G., PCHELIN, A. T., EKHINA, Ye. V.

"Influence of the Initial Macrostructure of the Ingot on the Nature of Softening During Annealing of Sheets of Technical Aluminum"

Metalloved. Splavov Legkikh Met. [Metal Science of Light Metal Alloys -- Collection of Works], Moscow, Nauka Press, 1970, p.11-15. (Translated from Referativnyy Zhurnal Metallurgiya, No. 5, 1971, Abstract No. 5 I662 by the authors).

Translation: The influence of the type of initial macrostructure of an ingot, macrograin size, and relationship of Fe and Si impurities on the mechanical properties and structure of cold-rolled Al sheets after annealing is studied. The hereditary influence of the type of casting structure of the ingot on the microstructure of annealed sheets is demonstrated, as well as the influence of grain size of the macrostructure of initial ingots on the displacement of the temperature of the beginning of intensive softening. 2 figs; 1 table.

1/1

APPROVED FOR RELEASE: 09/17/2001 CIA-RDP86-00513R002201630004-3"

"APPROVED FOR RELEASE: 09/17/2001 CIA-RDP86-00513R002201630004-3

UDC 669.716:621.785.3

USSR

BOCHVAR, O. S., KUNYAVSKAYA, T. M., KIRPA, I. G., PCHELIN, A. T., and EKHINA, Ye. V.

"The Effect of the Initial Macrostructure of the Ingot on the Weakening Character In Annealing Sheets of Industrial Aluminum"

Metallovedeniye Splavov Legkikh Metallov-Sbornik, Moscow, "Nauka", 1970, pp 11-15, resume

Translation: Effects of the type of macrostructure of the initial ingot, the size of the macrograin, and also the relation of iron and silicon admixtures after annealing on the mechanical properties and structure of cold-rolled aluminum sheets after annealing are discussed. The hereditary effect of the type of cast structure of the ingot on the microstructure of annealed sheets is demonstrated, as is the effect of macrostructure grain sizes of initial ingots on the shift in temperature of the beginning of intensive weakening. Two figures, one table.

1/1

APPROVED FOR RELEASE: 09/17/2001 CIA-RDP86-00513R002201630004-3"

"APPROVED FOR RELEASE: 09/17/2001 CIA-RDP86-00513R002201630004-3

UDC 537.583

USSR

SAMSONOV, G. V., Corresponding Member of the Academy of Sciences Ukrainian SSR, and KUNYTS'KYY, YU. A., Institute of Problems of Material Science, Academy of Sciences Ukrainian SSR

"Thermionic Properties of Diborides of Transition Metals of Groups IV-VI"

Kiev, Dopovidi Akademiyi Nauk Ukrayins'koyi RSR, Seriya A -- Fizyko-Tekhnichni ta Matematychni Nauky, No 11, Nov 70, pp 1048-1050

Abstract: The article gives qualitative representations of the nature of the thermionic emission of transition metals of groups IV-VI. The dependence of the work function of transition metal diborides on the statistical weight d^5 of stable configurations (SWASC d^5), developed by I. F. PRYADKO, is plotted. It is found that at the very same principal quantum number of valence electrons for a metal there is a decrease in the work function of diborides with an increase in the SWASC d^5 of the metal. The following regularities are also observed in work function varia-

1/3

APPROVED FOR RELEASE: 09/17/2001 CIA-RDP86-00513R002201630004-3"

"APPROVED FOR RELEASE: 09/17/2001 CIA-RDP86-00513R002201630004-3

USSR

SAMSONOV, G. V., and KUNYTS'KYY, YU. A., Dopovidi Akademiyi Nauk Ukrayins'koyi RSR, Seriya A -- Fizyko-Tekhnichni ta Matematychni Nauky, No 11, Nov 70, pp 1048-1050

tions according to atomic number: a) the work function of diborides is less than that of pure metals; b) the decrease in the work function for diborides as compared to the metals increases from group IV to group VI; c) an increase in the atomic number of a metal is accompanied by a decrease in the work function of the corresponding diboride.

The explanation for these regularities in work function variations is based on the volume concept of the work function and the use of the condensed state configuration model. It is shown that nonlocalized electrons of the atoms of a metal play a dual role in diborides, on the one hand stabilizing the sp^2 configurations of the boron atoms, on the other hand effecting a bond between the plane networks constructed from these atoms. An increase in the nonlocalized proportion of valence electrons

2/3

APPROVED FOR RELEASE: 09/17/2001 CIA-RDP86-00513R002201630004-3"

"APPROVED FOR RELEASE: 09/17/2001 CIA-RDP86-00513R002201630004-3

USSR

SAMSONOV, G. V., and KUNYTS'KYY, YU. A., Dopovidi Akademiyi Nauk Ukrayins'koyi RSR, Seriya A — Fizyko-Tekhnichni ta Matematychni Nauky, No 11, Nov 70, pp 1048-1050

causes greater stabilization of the sp^2 configurations, as well as greater strength of the bond between the plane boride networks. It is suggested that Me-B and B-B bonds are of decisive significance in the formation of the properties of the diborides, rather than Me-Me bonds and the localization of electrons on these bonds.

3/3

APPROVED FOR RELEASE: 09/17/2001 CIA-RDP86-00513R002201630004-3"

"APPROVED FOR RELEASE: 09/17/2001 CIA-RDP86-00513R002201630004-3

USSR UDC 539.4:[626.011.1+624.014]

BELENYA, YE. I., KUPALOV, K. K., SOBOLEV, YU. V.

"Finding an Efficient Prestressed Design for High Pressure Equipment with a Cylindrical Housing"

V sb. III Mezhdunar. konf. po predvarit. napryazhennym metal. konstruktsiyam. T. 2 (Third International Conference on Prestressed Metal Structural Elements, Vol 2--collection of works), pp 3-12 (from RZh-Mekhanika, No 11, Nov 71, Abstract No 11V920)

Translation: During 1969, research was performed at the Moscow Engineering Construction Institute imeni V. V. Kuybyshev to find an efficient design for equipment calculated for a rare combination of large size and high internal pressure. When comparing several versions of the housing design using high-strength materials with different shapes of the shell -- spherical, cylindrical with hemispherical bottom, and so on -- it turned out that the most efficient in design respects and the most economical version is the one with a cylindrical housing prestressed by winding with high-strength wire with flat ribbed tops reinforced by rods.

1/1

APPROVED FOR RELEASE: 09/17/2001 CIA-RDP86-00513R002201630004-3"

"APPROVED FOR RELEASE: 09/17/2001 CIA-RDP86-00513R002201630004-3

USSR UDC: 669.14.018.252.3:629.789

LOKSHIN, L. F., KUPALOVA, I. K., LENYASHIN, V. B.

"News in the Technology of the Thermomechanical Treatment of High Speed Steels

Metallovedeniye i Termicheskaya Obrabotka Metallov, No 9, 1973, pp 31-34.

Abstract: This work describes a study of the influence of low and high temperature heat treatment and mechanical working modes on the strength, ductility, red hardness and cutting ability of drills, as well as the fine structure and physical properties of high speed steels of three groups: tungsten steels (R12 and R18), tungsten-molybdenum steels (R6, M5) and tungsten-molybdenum-cobalt steels (R6M5K5). All steels were subjected to low temperature treatment with deformation at 550-600° C; in addition types R6M5 and R6M5K5 steels were subjected to high temperature treatment with deformation at 1000-1100° C. The strength and ductility were found to increase with increasing deformation, maximum values of strength and ductility corresponding. The study of the fine structure showed that defects formed during deformation of austenite at 1000-1100° C, significantly increasing the diffusion mobility of the carbon in the austenite, cause the formation of tiny alloy carbides immediately during deformation or during cooling after deformation. The results produced allow heat and mechanical treatment to be

1/2

APPROVED FOR RELEASE: 09/17/2001 CIA-RDP86-00513R002201630004-3"

"APPROVED FOR RELEASE: 09/17/2001 CIA-RDP86-00513R002201630004-3

USSR

Lokshin, L. F., Kupalova, I. K., Lenyashin, V. B., Metallovedeniye i Termicheskaya Obrabotak Metallov, No 9, 1973, pp 31-34.

recommended for high speed steels, particular high temperature heat and mechanical treatment for R6M5 steel.

2/2

APPROVED FOR RELEASE: 09/17/2001 CIA-RDP86-00513R002201630004-3"

"APPROVED FOR RELEASE: 09/17/2001 CIA-RDP86-00513R002201630004-3

Steels

UDC 539.4

USSR

KUPALOVA, I. K., and STEPNOV, Ye. M., All-Union Scientific Research Institute of Instruments

"Study of Conversions Occurring During the Process of Heating of Hardened High-Speed Steels"

Moscow, Fizika Metallov i Metallovedeniye, Vol 30, No 5, 1970, pp 1115-1119

Abstract: Using a high temperature X-ray chamber, the lattice parameters (a_α and a_γ) and spectral line widths (β_α and β_γ) and the α and γ phases were determined, as well as the quantity of residual austenite and separated dispersed M_6C, MC, and Co_7W_6 phases in types R18, R14F4, R9K10, EV20K20Kh4F5M, and V20K25Kh4M1FT steels hardened from the optimal temperatures. Measurement of the parameters was performed using an URS-501 diffractometer in Fe-radiation in the 26-30° angle interval (to calculate the percentage of residual austenite and area S of dispersed phase); in the 53-56° interval (to determine a_α and β_α), and in the 61-65° interval (to determine a_γ and β_γ). The percentage of residual austenite was calculated using a method providing ± 5% accuracy. The line widths were determined by planimetry of areas. The lattice parameters

1/2

APPROVED FOR RELEASE: 09/17/2001 CIA-RDP86-00513R002201630004-3"

"APPROVED FOR RELEASE: 09/17/2001 CIA-RDP86-00513R002201630004-3

USSR

KUPALOVA, I. K., and STEPNOV, Ye. M., Fizika Metallov i Metallovedeniye, Vol 30, No 5, 1970, pp 1115-1119

were calculated on the basis of the position of the diffraction line maximum with an accuracy of ± 0.002 kX. The temperature intervals for separation of hardening phases and conversion of residual austenite were determined in the 20-800° temperature range at a rate of 3°/min.

2/2

APPROVED FOR RELEASE: 09/17/2001 CIA-RDP86-00513R002201630004-3"

"APPROVED FOR RELEASE: 09/17/2001 CIA-RDP86-00513R002201630004-3

UDC 669.14.018.252.3:669.25

USSR

GULYAYEV, A. P., and KUPALOVA, I. K., Central Scientific Research Institute of Ferrous Metallurgy; All-Union Scientific Research Institute of Instruments

"Effect of Cobalt on the Structure and Characteristics of High-Speed Steels"

Moscow, Metallovedeniye i Termicheskaya Obrabotka Metallov, No 8, 1970, pp 34-43

Abstract: This article is a survey of work on the development of high-speed steels through the addition of cobalt to steel alloys. Cobalt was first used for this purpose in 1912, and since then the evidence has been accumulating that its use is indeed efficacious in toughening steel. A curve shows the relative cutting rates for three types of steel as a function of the percentage of cobalt content. The steels are 40Kh14N14V3, 38KhMYuA, and 50G, and the curves for all three are straight lines starting at the origin (zero Co %) and rising with a magnitude of slope of the order given. The cobalt content also affects other qualities of steel. In annealed steel, cobalt increases the HB hardness, increases the coercive strength Hc, increases the magnetic saturation $4\pi I_s$, increases the electrical

1/2

APPROVED FOR RELEASE: 09/17/2001 CIA-RDP86-00513R002201630004-3"

"APPROVED FOR RELEASE: 09/17/2001 CIA-RDP86-00513R002201630004-3

USSR

GULYAYEV, A. P., et al., Metallovedeniye i Termicheskaya Obrabotka Metallov, No 8, 1970, pp 34-43

resistivity ρ, reduces the residual magnetic induction B_r, reduces the maximum permeability μ_{max}, and slightly reduces the lattice parameters of α-phase and carbides of M6C and M2C. It does not affect the diffusion of carbon in austenite, but at temperatures below 950° C it increases the diffusion coefficient of tungsten and consequently accelerates the conversion of the residual austenite during tempering.

2/2

APPROVED FOR RELEASE: 09/17/2001 CIA-RDP86-00513R002201630004-3"

"APPROVED FOR RELEASE: 09/17/2001 CIA-RDP86-00513R002201630004-3

K

UDC 621.372.061:538.56

USSR

KUPATADZE, T. G.

"Study of Some Peculiarities of an Oscillatory Circuit with a Ferrite Core in the Forced Oscillation Mode"

Tr. 15-i Nauchno-tekhn. konferentsii professorsko-prepodavatelsk. Nauchnotekhn. korabotnikov, problemi. i otraslev. labor. Gruz. politekhn. in-t. Vyp. 7 (Works of the 15th Scientific and Technical Conference of the Professorial and Teaching Staff of Scientific Workers of the Problem and Branch Laboratories. Georgian Polytechnical Institute. Vyp. 7), Tbilisi, 1970, pp 67-71 (from RZh-Radiotekhnika, No 8, Aug 70, Abstract No 8A171)

Translation: In this article the phase-amplitude and phase-frequency characteristics of an oscillatory circuit containing a coil with a ferrite core are obtained. The losses and signal distortions in the circuit are investigated. The bibliography has three entries.

1/1

APPROVED FOR RELEASE: 09/17/2001 CIA-RDP86-00513R002201630004-3"

"APPROVED FOR RELEASE: 09/17/2001 CIA-RDP86-00513R002201630004-3

Acc. Nr.: AT0046523

Ref. Code: 21R0/44

UDC 681.142.32

USSR

GOLUBINTSEV, VLADIMIR OLEGOVICH, Senior Engineer of the Computation Center of Novocherkassk Polytechnical Institute, KUPAYEV, VALERIY [illegible], NOVICH, Senior Engineer of the Computation Center of Novocherkassk Polytechnical Institute, SIMEL'NIKOV, YE. M.

"Basic Operating Principles and Structure of All-Purpose Digital Computers"

Novocherkassk, Izvestiya Vysshikh Uchebnykh Zavadeniy, Elektromekhanika (News of the Institutions of Higher Learning, Electromechanics), No 1, 1970, pp 99-104 (from Izvestiya Vysshikh Uchebnykh Zavadeniy, Elektromekhanika, No 1, 1970, p 115)

Translation: This article contains a study of the most important characteristic features and principles inherent in the functional structure of all-purpose digital computers and the possibilities of their technical realization. A comparative analysis of the operation of the man-calculator and the digital computer is made. Basic elements and units are described in brief, and the structural diagram of a digital computer is presented. The machine cycle is investigated. There is 1 illustration.

4

Reel/Frame
19781780

1/1

APPROVED FOR RELEASE: 09/17/2001 CIA-RDP86-00513R002201630004-3"

"APPROVED FOR RELEASE: 09/17/2001 CIA-RDP86-00513R002201630004-3

1/3 022 UNCLASSIFIED PROCESSING DATE--09OCT70

TITLE--STRUCTURE AND MAGNETIC PROPERTIES OF A CONTROLLABLE FE-FE SUBX SB EUTECTIC -U-

AUTHOR-(03)-GOREV, K.V., KUPCHENKO, G.V., NESTEROVICH, L.N.

K

COUNTRY OF INFO--USSR

SOURCE--VESTSI AKAD. NAVUK BELARUS. SSR, SER. FIZ.-TEKH. NAVUK 1970, (1), 79-81

DATE PUBLISHED--------70

SUBJECT AREAS--MATERIALS, PHYSICS

TOPIC TAGS--EUTECTIC MIXTURE, IRON, ANTIMONY, HYSTERESIS LOOP, CRYSTALLIZATION, ANISOTROPY, MAGNETIC PROPERTY

CONTROL MARKING--NO RESTRICTIONS

DOCUMENT CLASS--UNCLASSIFIED

PROXY REEL/FRAME--1993/1967 STEP NO--UR/0201/70/000/001/0079/0081

CIRC ACCESSION NO--AP0114379

UNCLASSIFIED

APPROVED FOR RELEASE: 09/17/2001 CIA-RDP86-00513R002201630004-3"

"APPROVED FOR RELEASE: 09/17/2001 CIA-RDP86-00513R002201630004-3

2/3 022 UNCLASSIFIED PROCESSING DATE--09OCT70

CIRC ACCESSION NO--AP0114379

ABSTRACT/EXTRACT--(U) GP-0- ABSTRACT. THE FE-FE SUBX SB EUTECTIC, WITH THE COMPN. 48PERCENT FE AND 52PERCENT SB, WAS PREPD. BY MELTING 99.984PERCENT PURE CARBONYL FE AND 99.999PERCENT PURE SB IN QUARTZ CRUCIBLES IN A PURIFIED AR ATM. THE BOULES OBTAINED WERE ZONE REFINED. THE SAMPLES FOR METALLOGRAPHIC AND MAGNETIC STUDIES, 20 TIMES 20 TIMES 4 MM, WERE SECTIONED FROM THE BOULE PARALLEL TO ITS UPPER SURFACE AND PARALLEL TO THE CRYSTN. DIRECTION. THE CONTROLLABLE EUTECTIC CONSISTS OF FE FIBERS WHICH ARE ARRANGED IN THE FE SUBX SB MATRIX PARALLEL TO ONE ANOTHER AND TO THE GROWTH DIRECTION. AT A CRYSTN. RATE OF 6-12 CM-HR, THE PARALLEL ARRANGEMENT OF THE FIBERS IS PRESERVED, BUT THEIR DIAM. DECREASES FROM 1.5 TO 1 MU. THE FE PARTICLES ARE, AS A RULE, NOT COMBINED WITH ONE ANOTHER, BUT SIT IN THE MATRIX INDIVIDUALLY AND SEP. AS A RESULT OF THE PARALLEL ORIENTATION OF THE FE PARTICLES, THE MAGNETIZATION CURVES ALSO DIFFER. INFLECTION OF THE CURVE ON MAGNETIZATION ALONG THE FIBERS IS GENERALLY OBSD. AT MAGNETIC INDUCTION OF 3750-3950 G. MAGNETIZATION ACROSS THE FIBERS IS DIFFICULT TO ACHIEVE. IN THE STRUCTURE OF THE CAST EUTECTIC, THERE ARE NO PREFERRED ORIENTATIONS OF THE FE PARTICLES. SATN. INDUCTION IS REACHED IN A FIELD OF GREATER THAN 7 KOE. THE HYSTERESIS LOOPS OF THE FE-FE SUBX SB EUTECTIC ARE VERY NARROW. FOR SAMPLES WITH PARTICLES 1.5 MU IN DIAM., THE RESIDUAL INDUCTION ALONG THE FIBERS IS 1150-1210 G, AND THE COERCIVE FORCE IS 19-21 OE. DIRECTED CRYSTN. OF THE FE-FE SUBX SB EUTECTIC LEADS TO CONSIDERABLE ANISOTROPY IN ITS MAGNETIC PROPERTIES DUE TO UNIDIRECTIONAL ARRANGEMENT OF THE FE PARTICLES IN THE FE SUBX SB MATRIX.

UNCLASSIFIED

APPROVED FOR RELEASE: 09/17/2001 CIA-RDP86-00513R002201630004-3"

"APPROVED FOR RELEASE: 09/17/2001 CIA-RDP86-00513R002201630004-3

3/3 022 UNCLASSIFIED PROCESSING DATE--09OCT70

CIRC ACCESSION NO--AP0114379

ABSTRACT/EXTRACT--FACILITY: FIZ.-TEKH. INST., MINSK, USSR.

UNCLASSIFIED

APPROVED FOR RELEASE: 09/17/2001 CIA-RDP86-00513R002201630004-3"

"APPROVED FOR RELEASE: 09/17/2001 CIA-RDP86-00513R002201630004-3

USSR UDC 533.601.155

GRIB, A.A., KOLTON, G.A., KUPCHINENKO, M.F.

"Hypersonic Gas Flow Past a Developing Surface"

Leningrad, Vestnik Leningradskogo Universiteta, No 1, 1971, pp 102-108

Abstract: A system of ordinary Vallander-Nikol'skiy differential equations for flows on a developing surface is reduced to a system of integral equations used for application of the iteration method for M_0 Mo 1. Taken as the zero approximation is the limiting case of rarefaction flow. The practical convergence of the iteration method is shown in some particular examples. 2 figures, 4 bibliographic entries.

1/1

APPROVED FOR RELEASE: 09/17/2001 CIA-RDP86-00513R002201630004-3"

"APPROVED FOR RELEASE: 09/17/2001 CIA-RDP86-00513R002201630004-3

AA0040645 KUPCHINOV B. I. UR 0482

Soviet Inventions Illustrated, Section I Chemical, Derwent, 1-70

242367 ESTABLISHING RESISTANCE PROBES, e.g. in the surface of articles made from thermoplastics materials, involved the embedding of wire gauge in the surface layer of the article concerned, but this was found to lead to some collapse of the original structure of the plastics surface. To improve the method for inserting the wire resistance probes, it is suggested that the wire gauze should be heated to a temperature higher than the melting temp. of the material from which the article is made, and the gauze is then embedded in the surface layer of the article using a tool, the temp. of which is lower than the melting point of the plastic. Heating of the wire gauze can be done with an electric current. 25.1.67. as 1129737/23-5. BELYI, V.A. and others Belorussian Acad. of Sciences. (2.9.69) Bul. 15/25.4.69. Class 39a[4] Int. Cl. B 29c.

1/2

19750222

APPROVED FOR RELEASE: 09/17/2001 CIA-RDP86-00513R002201630004-3"

"APPROVED FOR RELEASE: 09/17/2001 CIA-RDP86-00513R002201630004-3

AA0040645

AUTHORS: Belyy, V. A.; Inyutin, I. S.; Sysoyev, P. V.; Kupchinov, B. I.; and Kukharenko, L. B.

Otdel Mekhaniki Polimerov AN Belorusskoy SSR

19750223

APPROVED FOR RELEASE: 09/17/2001 CIA-RDP86-00513R002201630004-3"

"APPROVED FOR RELEASE: 09/17/2001 CIA-RDP86-00513R002201630004-3

USSR UDC 621.822.5

BELYY, V. A., KUPCHINOV, B. I., MIKHNEVICH, A. S., ASTASHIN, V. Ya., and YEGOREMKOV, N. I.

"Bearings with Metal-Polymeric Plating"

Moscow, Mashinostroitel', No 5, May 71, p 24

Abstract: A method of producing strip materials with antifriction metal-polymeric plating has been developed at the Institute of Mechanics of Metal-Polymeric Systems of the Belorussian SSR. The method is described, properties of the new material are discussed, and its high antifriction quality is demonstrated in comparison with the strip material tombac. Preliminary results of field tests proved the high efficiency of the new material. Its use for bearing bushings for starters of automotive engines is now being investigated. Three figures.

1/1

APPROVED FOR RELEASE: 09/17/2001 CIA-RDP86-00513R002201630004-3"

"APPROVED FOR RELEASE: 09/17/2001 CIA-RDP86-00513R002201630004-3

1/2 023 UNCLASSIFIED PROCESSING DATE--29NOV70

TITLE--PHENOMENON OF LOCAL EOSINOPHILLIA -U-

AUTHOR-(02)-KOPCHINSKAS, YU.K., SHMIGELSKENE, N.I.

COUNTRY OF INFO--USSR

SOURCE--TERAPEVTICHESKIY ARKHIV, 1970, VOL 42, NR 6, PP 29-32

DATE PUBLISHED--------70

SUBJECT AREAS--BIOLOGICAL AND MEDICAL SCIENCES

TOPIC TAGS--ALLERGIC DISEASE, SKIN DISEASE, BLOOD CELL, BIOLOGIC STAIN

CONTROL MARKING--NO RESTRICTIONS

DOCUMENT CLASS--UNCLASSIFIED

PROXY REEL/FRAME--3002/1917 STEP NO--UR/0504/70/042/006/0029/0032

CIRC ACCESSION NO--AP0129618

UNCLASSIFIED

APPROVED FOR RELEASE: 09/17/2001 CIA-RDP86-00513R002201630004-3"

"APPROVED FOR RELEASE: 09/17/2001 CIA-RDP86-00513R002201630004-3

2/2 023 UNCLASSIFIED PROCESSING DATE--20NOV70

CIRC ACCESSION NO--AP0127266

ABSTRACT/EXTRACT--(U) GP-0- ABSTRACT. USING A LOCAL EOSINOPHILIA TEST THE AUTHORS DETECTED ACCUMULATION OF EOSINOPHILS IN THE CAPILLARIES OF THE AFFECTED TISSUES. THIS PROCESS WAS ATTRIBUTED TO PERIOTAXIS. IN ALLERGIC AFFECTIONS OF THE SKIN OF AN INSTANTANEOUS TYPE LOCAL EOSINOPHILIA EXCEEDED A GENERAL ONE BY 30-200 AND MORE PERCENTAGE. ALLERGIC REACTIONS OF A DELAYED TYPE WERE USUALLY ACCOMPANIED BY LOCAL EOSINOPENIA. LOCAL EOSINOPHILIA IS A NEW ADDITIONAL SIGN IN THE DIAGNOSIS OF ALLERGIC DISEASES. FACILITY: KAFEDRA FAKUL'TETSKOY TERAPII KAUNASSKOGO MEDITSINSKOGO INSTITUT.

UNCLASSIFIED

APPROVED FOR RELEASE: 09/17/2001 CIA-RDP86-00513R002201630004-3"

"APPROVED FOR RELEASE: 09/17/2001 CIA-RDP86-00513R002201630004-3

USSR

GLEZER, V. D. and KUPERMAN, A. M., Institute of Physiology imani I. P. Pavlov, Academy of Sciences USSR, Leningrad

"Model of a Relationship Between Visual Acuity and Contrast"

Moscow, Biofizika, No 1, 1972, pp 110-115

Abstract: In an earlier article the authors showed that there are three types of receptive fields in the cat corpus geniculatum laterale. One type is characterized by a decrease in the central summation zone with increasing contrast between stimulus and background. In the other two types, the central zone is independent of contrast. The proposed model here described shows the receptors converging through intermediate inhibitory and excitatory elements upon the output element. By altering the parameters of the element one can shift from one type of field to another. The outputs of the excitatory and inhibitory elements are power functions of the input signals with different exponents. The model reflects a real receptive field in which the central summation zone diminishes as contrast increases. Visual acuity is intensified with increase in contrast.

1/1

APPROVED FOR RELEASE: 09/17/2001 CIA-RDP86-00513R002201630004-3"

"APPROVED FOR RELEASE: 09/17/2001 CIA-RDP86-00513R002201630004-3

USSR

UDC: 550.834

ROZIN, G. I.-M., KUPERMAN, B. M., NIKIFOROV, S. V., All-Union Scientific Research Institute of Geophysical Prospecting Methods

"A Device for Plotting Seismic Time Sections"

Moscow, Otkrytiya, Izobreteniya, Promyshlennyye Obraztsy, Tovarnyye Znaki, No 13, May 72, Author's Certificate No 335644, Division G, filed 17 Dec 70, published 11 Apr 72, pp 193-194

Translation: This Author's Certificate introduces a device for plotting seismic time sections. The device contains a rotating drum, an electric motor, a speed reducer, a moving carriage with step-by-step motor and a cathode-ray tube. As a distinguishing feature of the patent, the service life of the CRT is extended, reliability is improved, and the overall dimensions of the device are reduced by mounting the rotating drum and the electric motor connected to it through the speed reducer on the moving carriage which is displaced discretely by the step-by-step motor along the turning axle of the drum parallel to the screen of the stationary CRT.

1/2

APPROVED FOR RELEASE: 09/17/2001 CIA-RDP86-00513R002201630004-3"

"APPROVED FOR RELEASE: 09/17/2001 CIA-RDP86-00513R002201630004-3

USSR

ROZIN, G. I.-M. et al., USSR Author's Certificate No 335644

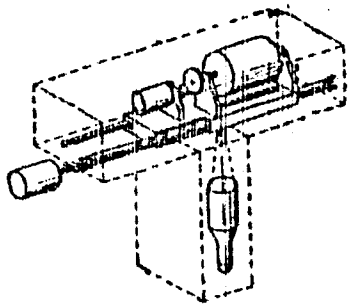

2/2

APPROVED FOR RELEASE: 09/17/2001 CIA-RDP86-00513R002201630004-3"

"APPROVED FOR RELEASE: 09/17/2001 CIA-RDP86-00513R002201630004-3

USSR

UDC 621.396.6.019.3

KUPERMAN, G. M.

"Analysis of the Accuracy of the Characteristics of Electric Filters for Large Deviations of the Elements from the Calculated Values"

Metody razrab. radiotelektron. apparatury. Materialy Seminara. Sb. 2 (Methods of Developing Radioelectronic Equipment. Materials of the Seminar. Collection 2), Moscow, 1970, pp 66-69 (from RZh-Radiotekhnika, No 8, Aug 70, Abstract No 8A184)

Translation: An analysis is performed on the basis of relations obtained from the theorem of the bilinear form of the circuit functions (see S. R. Parkes, E. Peskiu, IEEE Trans. Circuit, Theory, 1965, CT-12, No 3). This removes the restrictions connected with the magnitude of the parameter variations. Damping of the polynomial filter is considered as an example. There are two illustrations and a one-entry bibliography.

1/1

APPROVED FOR RELEASE: 09/17/2001 CIA-RDP86-00513R002201630004-3"

"APPROVED FOR RELEASE: 09/17/2001 CIA-RDP86-00513R002201630004-3

USSR UDC: 624.824:624.131.6

ZINEVICH, N. I., Engineer, KUPERMAN, V. L., Candidate of Technical Sciences, KUZ'MIN, K. K., Engineer, and TOLKACHEV, L. A., Engineer

"Erection of an Earthfill Dam With an Injected Core and a Film Type Diaphragm Without Drainage of the Foundation Pit"

Moscow, Gidrotekhnicheskoye Stroitel'stvo, No 5, May 73, pp 20-23

Abstract: The authors describe a dam built for the Atbashinskaya Hydroelectric Power Station on the Atbasha River. The dam was designed for a head of 75 m and is located in rough mountain terrain associated with complex seismic and geologic conditions. This is an earthfill type dam with an injected core and a film type diaphragm without drainage of the foundation pit. This method of construction made it possible to cut down on construction time by eight to ten months and save 300 thousand rubles. The use of a film type diaphragm and the method for fastening it to the steep stone walls made it possible to locate an earthfill dam in a narrow canyon. These conditions ensured a significant reduction in the dam volume and reduced the cost of construction (900 thousand rubles). The use of the film diaphragm as an antifiltration device made it possible to continue construction during the winter months at temperatures as low as -20°C. The construction of special galleries for injection operations made it possible to continue the dam fill operations without delays.

1/1

APPROVED FOR RELEASE: 09/17/2001 CIA-RDP86-00513R002201630004-3"

"APPROVED FOR RELEASE: 09/17/2001 CIA-RDP86-00513R002201630004-3

USSR UDC 627.8.05

KUPERMAN, V. L.

"Means of Improving the Quality of Construction and Installation Operations when Constructing Hydroelectric Power Plants"

Energ. str-vo -- V sb. (Power Engineering Construction -- Collection of Works), No 10 (112), Moscow, 1970, pp 43-46 (from RZh-Elektrotekhnika i Energetika, No 2, Feb 71, Abstract No 2 D192)

Translation: A description of the state of the art of construction and installation operations at hydroengineering sites is presented, and recommendations are made with respect to introduction of scientific methods of labor, technological process structural elements, automation and mechanization of operations at the construction sites.

1/1

APPROVED FOR RELEASE: 09/17/2001 CIA-RDP86-00513R002201630004-3"

"APPROVED FOR RELEASE: 09/17/2001 CIA-RDP86-00513R002201630004-3

UDC 669.046.5

USSR

KUPERSHTOK, V. Ye., LADYZHENSKIY, B. N., OFENGENDEN, A. M., and SERBIN, V. A.

"Slag Formation and Metal Desulfuration in Covering Slag With Dust-Like Lime"

Moscow, V sb. "Sovremennyye problemy kachestva stali" (MISiS) (Collection of Works. Modern Problems of Steel Quality) (Moscow Institute of Steel and Alloys) Izd-vo "Metallurgiya," No 61, 1970, pp 132-134

Translation of Abstract: The results of an investigation on slag formation and metal desulfuration in a 142-ton martin furnace with lime blowing are presented. 2 figures, 1 table.

1/1

APPROVED FOR RELEASE: 09/17/2001 CIA-RDP86-00513R002201630004-3"

"APPROVED FOR RELEASE: 09/17/2001 CIA-RDP86-00513R002201630004-3

USSR

UDC 512.25/.26+519.3.330.115

KUPERSHTOKH, V. L., MIRKIN, B. G.

"One Classification Algorithm and the Ford-Falkerson Theorem"

Mat. Vopr. Formir. Ekon. Modeley [Mathematical Problems of Formation of Economic Models -- Collection of Works], Novosibirsk, 1970, pp 151-161 (Translated from Referativnyy Zhurnal Kibernetika, No. 4, April, 1971, Abstract No. 4 V547).

No Abstract.

1/1

APPROVED FOR RELEASE: 09/17/2001 CIA-RDP86-00513R002201630004-3"

"APPROVED FOR RELEASE: 09/17/2001 CIA-RDP86-00513R002201630004-3

UDC 621.385.632.01

USSR

KUPFER, A. M.

"A Table For Representation Of Coulomb Forces During Machine Computation Of A TWT"

Elektron. tekhnika. Nauchno-tekhn. sb. Elektron. SVCh (Electronic Technology. Scientific-Technical Collection. Microwave Electronics), 1970, Issue 11, pp 149-152 (from RZh--Elektronika i yeye primeneniye, No 2, February 1971, Abstract No 2A146)

Translation: A method is described for machine computation of a traveling-wave tube which uses the table method for representation of the Coulomb influence functions. As an example, the coefficient of reduction of the plasma frequency is computed according to the equations of a multibeam model. The method presented is also applicable for solution of a two-dimensional problem. 2 ref. Summary.

1/1

APPROVED FOR RELEASE: 09/17/2001 CIA-RDP86-00513R002201630004-3"

"APPROVED FOR RELEASE: 09/17/2001 CIA-RDP86-00513R002201630004-3

ANO 012008

UR9007

AUTHORS-- ANOKHIN, S., AND GALLAY, M., MERITORIOUS TEST PILOTS, U.S.S.R., KUPFER, M. AND GRIBOVSKIY, V., AIRCRAFT DESIGNERS, TSYBIN, P. AND PYSHNOV, V., MERITORIOUS SCIENTISTS AND ENGINEERS, RAUSHENBAKH, V., CORRESPONDING MEMBER OF THE ACADEMY OF SCIENCES, AND KOSTENKO, I., CANDIDATE OF TECHNICAL SCIENCES

TITLE-- WINGS FOR THE IMPOSSIBLE DREAM

NEWSPAPER-- KOMSOMOL,SKAYA PRAVDA, JANUARY 15, 1970, P 2, COLS 3-6

ABSTRACT-- THE AUTHORS ARE PROPOSING THE ESTABLISHMENT OF AN INTER-AGENCY COMMISSION ON GLIDERS AND SMALL-ENGINE PLANES WHICH WOULD GUIDE AND COORDINATE ALL THE ACTIVITIES CONNECTED WITH DO-IT-YOURSELF AIRCRAFT.

19570712

APPROVED FOR RELEASE: 09/17/2001 CIA-RDP86-00513R002201630004-3"

"APPROVED FOR RELEASE: 09/17/2001 CIA-RDP86-00513R002201630004-3

KUPFER M.A.

Ref. Code: UR9003

Acc. Nr.: AN0104123

49

TITLE-- ANNOUNCEMENT OF THE COMMITTEE ON LENIN AND STATE PRIZES, U.S.S.R.

NEWSPAPER-- IZVESTIYA, MAY 28, 1970, P 4, COLS 1-5

ABSTRACT-- NINETY ONE BASIC AND APPLIED RESEARCH WORKS HAVE BEEN NOMINATED FOR THE STATE PRIZES. TWO OF THESE, "THE MULTI-PURPOSE INDUSTRIAL HELICOPTER KA-26", BY N. I. KAMOV, V. B. AL. PEROVICH, V. B. BARSHEVSKIY, A. A. DMITRIYEV, G. I. IOFFE, M. A. KUPFER, L. A. POTASHNIK, N. N. PRIOROV, A. G. SATAROV, I. M. VEDENEYEV, S. B. BREN, AND V. A. NAZAROV, AND "THE DEVELOPMENT OF TURBOFAN JET ENGINES NK-8 AND NK-8-4, AND THE DEVELOPMENT AND REDUCTION TO SERIAL PRODUCTION A SYSTEM OF TECHNOLOGICAL PROCESSES WHICH ASSURED WIDE USES FOR TITANIUM ALLOYS", BY N. D. KUZNETSOV, M. T. VASILISHIN, V. A. KURGANOV, P. M. MARKIN, V. D. RADCHENKO, P. A. SUKHOV, A. A. MUKHIN, V. G. SHITOV, G. I. MUSHENKO, L. A. SHKODO, AND G. P. DOLGOLENKO, HAVE BEEN SUBMITTED BY THE MINISTRY OF THE AVIATION INDUSTRY.

1/2

Reel/Frame 19870555

APPROVED FOR RELEASE: 09/17/2001 CIA-RDP86-00513R002201630004-3"

"APPROVED FOR RELEASE: 09/17/2001 CIA-RDP86-00513R002201630004-3

Acc. Nr.: AN0104123

"A SERIES OF INVESTIGATIONS INTO THE DYNAMICS OF A BODY WITH FLUID-FILLED CAVITIES", /65-68/, BY N. N. MOISEYEV, A. A. PETROV, V. V. RUMYANTSEV AND F. L. CHERNOUS'KO AND "ULTRA HIGH PRECISION JIG BORING MILLS WITH 1,000 X 1,600 AND 1,400 X 2,240 MM PLATENS", BY A. I. KIR'YANOV, V. G. ABRAMOVICH, I. V. GUTKIN, A. S. ALIMPIYEV, G. B. PAUKOV, AND A. S. YEGUDKIN, HAVE BEEN SUBMITTED BY THE COMPUTATION CENTER OF THE ACADEMY OF SCIENCES AND THE MINISTRY OF THE MACHINE TOOL CONSTRUCTION AND TOOL INDUSTRY, RESPECTIVELY.

"THE RADICALLY IMPROVED MELTING TECHNOLOGY OF CRITICAL-PURPOSE HIGH-ALLOY STEELS AND ALLOYS OF IMPROVED QUALITY ACHIEVED BY THE INERT GAS TREATMENT OUTSIDE THE FURNACE", BY YU. V. GERASIMOV, O. M. CHEKHOMOV, N. V. SIDOROV, S. K. FILATOV, B. A. CHERNYKH, R. M. KHAYRUTDINOV, I. P. BARMOTIN, L. K. KOSYREV, K. P. BAKANOV, N. N. VLASOV, P. I. MELIKHOV, AND N. A. TULIN, HAS BEEN SUBMITTED BY THE ZLATOUST METALLURGICAL PLANT.

KZ

2/2

Reel/Frame
19870556

APPROVED FOR RELEASE: 09/17/2001 CIA-RDP86-00513R002201630004-3"

"APPROVED FOR RELEASE: 09/17/2001 CIA-RDP86-00513R002201630004-3

UDC: 531.782

USSR

KUPKO, V. S., BABICH, V. I.

"Experimental Study of Strip Force and Pressure Measurers"

Ukr. Resp. Nauch.-Tekhn. Konf., Posvyashch. 50-Letiyu Metrol. Sluzhby USSR, 1972 [Ukrainian Republic Scientific and Technical Conference Dedicated to the 50th Anniversary of the UkSSR Metrology Service, 1972 -- Collection of Works], Khar'kov, 1972, p 223 (Translated from Referativnyy Zhurnal Metrologiya i Izmeritel'naya Tekhnika, No 3, 1973, Abstract No 3.32.333)

Translation: The Khar'kov State Scientific Research Institute for Metrology has developed strip force and pressure measurers, in which the shape of the elastic element and cutting of the strip (S) from a single piece have allowed production of measuring devices stable over a broad range of loads. Results are presented from experimental study of strip measurers, and the dependence of frequency of the strip generator on surrounding medium temperature, conditions of attachment of the dynamometer and generator power supply voltage is studied. The experiments establish the following: 1. The temperature coefficient of the strip sensor changes with S tension: in the free state of the S, it is $2.6 \cdot 10^{-4}$, in the tight state --

1/2

APPROVED FOR RELEASE: 09/17/2001 CIA-RDP86-00513R002201630004-3"

"APPROVED FOR RELEASE: 09/17/2001 CIA-RDP86-00513R002201630004-3

USSR

Kupko, V. S., Babich, V. I., Ukr. Resp. Nauch.-Tekhn. Konf., Posvyashch. 50-Letiyu Metrol. Sluzhby USSR, 1972, Khar'kov, 1972, p 223.

$1.3 \cdot 10^{-5}$, which agrees with theoretical calculations. 2. The maximum error when various types of clamps are used is 0.2%, whereas a "Cardan" type clamp does not cause an error of over 0.05%. A reduction in the error caused by clamping of the sensor can be achieved by using a rigid elastic element and a "Cardan" type clamp. When the supply voltage changes by ±20%, the natural oscillating frequency of the generator changes by 0.06%, allowing operations without a stabilized power supply.

2/2

APPROVED FOR RELEASE: 09/17/2001 CIA-RDP86-00513R002201630004-3"

"APPROVED FOR RELEASE: 09/17/2001 CIA-RDP86-00513R002201630004-3

UDC 539.182

USSR

KUPLYAUSKIS, Z. I., MATULAYTITE, A. V., and YUTSIS, A. P., Vil'nyus State University imeni V. Kapsukas

"Application of Generalized, Hydrogen-Like Radial Orbitals to the Basic Configurations of Atoms of the Sodium and Aluminum Type"

Vil'nyus, Litovskiy Fizicheskiy Sbornik, Vol XII, No 1, 1972, pp 19-24

Abstract: Hydrogen-like and generalized hydrogen-like analytical radial orbitals are applied to calculate the base configurations of atoms and ions of the sodium and aluminum type. Generalized, hydrogen-like, analytical radial orbitals were previously applied to calculate the configurations $1s^22s^N$, $1s^22s^22p^N$, $1s^22s2p^N$, $1s^22s^22p^63p$, $1s^22s^22p^63s^2$, and $1s^22s^22p^63s^23p^6$. The purpose of the present study is to calculate the basic configuration of atoms of the sodium and aluminum type using ordinary and generalized, hydrogen-like, analytical radial orbitals. The problem of determining the values of the parameters of the analytical radial orbitals by finding the basic minimum of the expression for the nonrelativistic energy is discussed. The energy values obtained are comparable with results obtained using the solutions of the ordinary Hartree-Fock equations. The authors point out that the values of the parameters of analytical radial orbitals of the aluminum

1/2

APPROVED FOR RELEASE: 09/17/2001 CIA-RDP86-00513R002201630004-3"

"APPROVED FOR RELEASE: 09/17/2001 CIA-RDP86-00513R002201630004-3

USSR

KUPLYAUSKIS, Z. I., et al., Litovskiy Fizicheskiy Sbornik, Vol XII, No 1, 1972, pp 19-24

atoms as determined in the present study are necessary for a theoretical determination of the intensity of X-ray scattering. Numerical calculations were carried out on the Minsk-22 computer, and a table is presented showing the parameters of the analytical radial orbitals and the energy in Hartree atomic units for the $1s^2 2s^2 2p^6 3s$ orbitals. It is noted that the energies obtained using ordinary, hydrogen-like, analytical radial orbitals are considerably different from values obtained using generalized, hydrogen-like, analytical radial orbitals. The latter are close to values obtained by solving ordinary Hartree-Fock equations. This shows that the generalized, hydrogen-like, analytical radial orbitals which are simple in their analytical form and convenient for calculations are a good approximation to solutions for the Hartree-Fock equations and may be successfully applied in calculating atomic structures.

2/2

APPROVED FOR RELEASE: 09/17/2001 CIA-RDP86-00513R002201630004-3"

"APPROVED FOR RELEASE: 09/17/2001 CIA-RDP86-00513R002201630004-3

UNCLASSIFIED PROCESSING DATE--04DEC70

1/2 015

TITLE--EFFECT OF NOVOCAINE ON THE COURSE OF EXPERIMENTAL ISADRINE INDUCED NECROSES OF THE MYOCARDIUM -U-

AUTHOR--KUPNOVITSKAYA, I.G.

COUNTRY OF INFO--USSR

SOURCE--FARMAKOL. TOKSIKOL. (MOSCOW) 1970, 33(3), 295-7

DATE PUBLISHED--------70

SUBJECT AREAS--BIOLOGICAL AND MEDICAL SCIENCES

TOPIC TAGS--MYOCARDIUM, NECROSIS, ANESTHETIC

CONTROL MARKING--NO RESTRICTIONS

DOCUMENT CLASS--UNCLASSIFIED

PROXY FICHE NO----FD70/605003/F10 STEP NO--UR/0390/70/033/003/0295/0297

CIRC ACCESSION NO--AP0139587

UNCLASSIFIED

APPROVED FOR RELEASE: 09/17/2001 CIA-RDP86-00513R002201630004-3"

"APPROVED FOR RELEASE: 09/17/2001 CIA-RDP86-00513R002201630004-3

UNCLASSIFIED PROCESSING DATE--04JUL70

2/2 015

CIRC ACCESSION NO--AP0139587

ABSTRACT/EXTRACT--(U) GP-0- ABSTRACT. NOVOCAINE, GIVEN I.V. TO DOGS AT 10 MG-KG DAILY FOR 3 DAYS, PREVENT MYOCARDIAL NECROSIS WHEN GIVEN BEFORE ISOPROPYLARTERENOL INJECTION, AND CURED THE NECROSIS WHEN GIVEN AFTER ISOPROPYLARTERENOL.

FACILITY: IVANO-FRANKOVSK. MED. INST., IVANO-FRANKOVSK, USSR.

UNCLASSIFIED

APPROVED FOR RELEASE: 09/17/2001 CIA-RDP86-00513R002201630004-3"

"APPROVED FOR RELEASE: 09/17/2001 CIA-RDP86-00513R002201630004-3

UDC 669.017.3

USSR

KUPOREV, A. L. and KHANDROS, L. G., Institute of Metal Physics, Academy of Sciences Ukr SSR

"Twinning Structure of Martensite Crystals in Cu-Al-Mn Alloys"

Kiev, Metallofizika, No 39, 1972, pp 122-127

Abstract: The structure of gamma-prime martensite crystals was investigated in a Cu-Al-Mn alloy (14% Al, 1.5% Mn). It was shown that the gamma-prime crystals consist of two halves in a twinned position. These were separated by a middle plane having an orientation of $(10\bar{1}1)$ or (0001). Each of the halves of the gamma-prime crystal consists of an assembly of plates also found in a twinned position. The twinning plane of these plates has a $(1\bar{2}11)$ orientation. A different phase volume can be observed in each of the twinned arrangements. 5 figures, 5 bibliographic references.

1/1

APPROVED FOR RELEASE: 09/17/2001 CIA-RDP86-00513R002201630004-3"

"APPROVED FOR RELEASE: 09/17/2001 CIA-RDP86-00513R002201630004-3

1/2 011 UNCLASSIFIED PROCESSING DATE--30OCT70

TITLE--EFFECT OF SODIUM CHLORIDE CONCENTRATION ON THE ANODIC POTENTIAL AND ON THE WEAR OF GRAPHITE ANODES DURING THE ELECTROCHEMICAL PREPARATION OF

AUTHOR-(02)-EBERIL, V.I., KUPOVICH, F.V.

COUNTRY OF INFO--USSR

SOURCE--ELECTROKHIMIYA 1970, 6(3), 332-5

DATE PUBLISHED--------70

SUBJECT AREAS--CHEMISTRY

TOPIC TAGS--SODIUM CHLORIDE, ELECTRODE POTENTIAL, ELECTROSYNTHESIS, CHLORATE

CONTROL MARKING--NO RESTRICTIONS

DOCUMENT CLASS--UNCLASSIFIED

PROXY REEL/FRAME--2000/0657 STEP NO--UR/0364/70/006/003/0332/0335

CIRC ACCESSION NO--AP0124329

UNCLASSIFIED

APPROVED FOR RELEASE: 09/17/2001 CIA-RDP86-00513R002201630004-3"

"APPROVED FOR RELEASE: 09/17/2001 CIA-RDP86-00513R002201630004-3

2/2 011 UNCLASSIFIED PROCESSING DATE--30OCT7

CIRC ACCESSION NO--AP0124329

ABSTRACT/EXTRACT--(U) GP-0- ABSTRACT. THE RATE OF RISE OF ANODE WEAR WITH DIMINISHING NACL CONCN. INCREASES WITH C.D., I.E. ANODE POTENTIAL. AS C.D. INCREASES FROM 0.084 TO 0.097 A-CM PRIMEZ, ANODE WEAR SHARPLY INCREASES FOR ALL NACL CONCNS., CONFIRMING THE HAZARD OF OPERATING IMPREGNATED ANODES AT POTENTIALS NEAR TO THE CRIT. OPTIMUM CONDITIONS FOR IMPREGNEATED ANODES ARE OBTAINED WITH HIGHER NACL CONCNS. IN THE ELECTROLYTE WHEN WORKING WITH HIGH C.DS. OR WITH LOWER C.DS. AND LOWER NACL CONCNS.

UNCLASSIFIED

APPROVED FOR RELEASE: 09/17/2001 CIA-RDP86-00513R002201630004-3"

"APPROVED FOR RELEASE: 09/17/2001 CIA-RDP86-00513R002201630004-3

UDC 615.373.39:576.858.75].012.6

USSR

CHARCHOGLYAN, R. A., BERDINSKIKH, M. S., KUPRADZE, S. A., and KOSYAKOV, P. N., Institute of Virology imeni D. I. Ivanovskiy, Academy of Medical Sciences USSR

"Preparation of Specific Immune Serum to Sendai Virus Ribonucleoprotein"

Moscow, Voprosy Virusologii, No 5, 1971, pp 610-616

Abstract: Sendai virus was passaged in chick embryos and purified by a single cycle of differential centrifugation, with the sediment resuspended in phosphate buffer. Pure ribonucleoprotein (RNP) was isolated by Hosaka's method: the virus was destroyed with Tween 20 in an alkaline medium after which the RNP was isolated in a CsCl density gradient. Anti-S serum was obtained from rabbits immunized with the isolated RNP mixed with complete Freund adjuvant. The serum was tested in the complement-fixation and immunofluorescence reactions. Injection of the purified RNP resulted in the production of antibodies of different specificities to antigens of both viral and normal cells.

1/1

APPROVED FOR RELEASE: 09/17/2001 CIA-RDP86-00513R002201630004-3"

"APPROVED FOR RELEASE: 09/17/2001 CIA-RDP86-00513R002201630004-3

USSR UDC: 632.95

KHARCHENKO, V. G., KUPRANETS, N. M., POLIKARPOVA, N. V., KRUPINA, T. I., and KLIMENKO, S. K., Saratov Polytechnical Institute

"A Method for Preparing Tetrahydrothiochromyl or symm-Octahydrothioxanthenyl Chlorides"

USSR Author's Certificate No 255292, filed 19 Mar 68, published 8 Apr 70 (from RZh-Khimiya, No 22, 25 Nov 70, Abstract No 22 N674 P by G. V. Kusmetsova)

Translation: These substances, which can be used as physiologically active compounds, are obtained from the reaction of semi- or bicyclic 1,5-diketones with H_2S and HCl in an AcOH medium. A solution of 13.4 g of 1-phenyl-3-(n-methoxyphenyl)-3-(2-cyclohexanonyl)-propanone-1 in 45 ml of glacial AcOH is saturated with H_2S (1 hour) and then with a mixture of H_2S and HCl gas (3 hours) and H_2S (1 hour). 6 g (about 45%) of 2-phenyl-2-mercapto-4-(n-methoxyphenyl)-heptahydrothiochromene is filtered off from the reaction mass. The filtrate is diluted with 300 ml of dry ether, the sediment filtered off, washed with ether and benzene, producing 3.3 g (about 20%) hydrochloride of 2-phenyl-4-(n-methoxyphenyl)-5,6,7,8-tetrahydrothiochromyl chloride, $C_{22}H_{22}Cl_2OS$, melting

1/2

APPROVED FOR RELEASE: 09/17/2001 CIA-RDP86-00513R002201630004-3"

"APPROVED FOR RELEASE: 09/17/2001 CIA-RDP86-00513R002201630004-3

USSR

KHARCHENKO, V. G., et al., USSR Author's Certificate No 259292, filed 19 Mar 68, published 8 Apr 70 (from RZh-Khimiya, No 22, 25 Nov 70, Abstract No 22 N674 P by G. V. Kuznetsova)

point 111-4°; perchlorate of chloride, C H ClO S, melting point 169-71°. Symm-Octahydrothioxanthenyl chloride (I), $C_{22}H_{17}ClS$, is prepared from methylenedicyclohexanone under similar conditions, yield 50%, melting point 95-7° (chloroform-ether). The corresponding iodide, $C_{13}H_{17}IS$, is obtained from the action of 45% HI in ether on I, melting point 153.5-6°. 9-Benzyl-symm-octahydrothioxanthene is obtained from the reaction of I with $PhCH_2MgCl$, yield 41%, melting point 107-9°. The hydrochloride of 9-methyl-symm-octahydrothioxanthenyl chloride, $C_{14}H_{20}Cl_2S$, is obtained under these conditions from ethylenedicyclohexanone with a yield of 40%, melting point 155-6° (chloroform-ether). It is converted by the action of HI into the corresponding iodide, $C_{14}H_{19}IS$, melting point 143-5°.

2/2

APPROVED FOR RELEASE: 09/17/2001 CIA-RDP86-00513R002201630004-3"

"APPROVED FOR RELEASE: 09/17/2001 CIA-RDP86-00513R002201630004-3

Acc. Nr: AP0048812 Abstracting Service: CHEMICAL ABST 4/70 Ref. Code: 21R0366

90212j Reaction of "semicyclic" 1,5-diketones with hydrogen sulfide. Kharchenko, V. G.; Kupranets, N. M. (USSR). Zh. Org. Khim. 1970, 6(1), 193 (Russ). In the reaction of 2-[(CHR-CH$_2$COR')-substituted]-cyclohexanones with H$_2$S in MeOH soln. contg. dry HCl(g), MeOH also participates. The reaction gives substituted 2-methoxy-1-thia-1,2,3,4,5,6,7,8-octahydronaphthalenes (I) (R' and R given): Ph, 4-MeOC$_6$H$_4$; β-naphthyl, Ph;

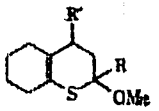

(I)

β-naphthyl, 4-MeOC$_6$H$_4$; Ph, 3,4-(MeO)$_2$C$_6$H$_3$. In AcOH soln., I react with HCl or HClO$_4$ forming 2R,4R'-disubstituted-5,6-tetramethylenethiopyrylium hydrochlorides or perchlorates. CPJR

REEL/FRAME
19800575

APPROVED FOR RELEASE: 09/17/2001 CIA-RDP86-00513R002201630004-3"

"APPROVED FOR RELEASE: 09/17/2001 CIA-RDP86-00513R002201630004-3

UNCLASSIFIED PROCESSING DATE--11DEC70

1/2 007

TITLE--REACTION OF 1,5,DIKETONES WITH HYDROGEN SULFIDE IN ACID MEDIA -U-

AUTHOR-(05)-KHARCHENKO, V.G., KUPRIANETS, N.M., KLEIMENOVA, V.I., RASSUDOVA, A.A., STANKEVICH, M.E.

COUNTRY OF INFO--USSR

SOURCE--ZH. ORG. KHIM. 1970, 6(5), 1119-20 (RUSS)

DATE PUBLISHED--------70

SUBJECT AREAS--CHEMISTRY

TOPIC TAGS--KETONE, HYDROGEN SULFIDE, BENZENE DERIVATIVE, THIOL

CONTROL MARKING--NO RESTRICTIONS

DOCUMENT CLASS--UNCLASSIFIED

PROXY REEL/FRAME--3006/1289 STEP NO--UR/0366/70/006/005/1119/1120

CIRC ACCESSION NO--AP0134963

UNCLASSIFIED

APPROVED FOR RELEASE: 09/17/2001 CIA-RDP86-00513R002201630004-3"

"APPROVED FOR RELEASE: 09/17/2001 CIA-RDP86-00513R002201630004-3

2/2 007 UNCLASSIFIED PROCESSING DATE--11DEC70

CIRC ACCESSION NO--AP0134963

ABSTRACT/EXTRACT--(U) GP-0- ABSTRACT. THE REACTION OF RCOCHR PRIME1 CHR PRIME2 CHR PRIME3 COR PRIME4 WITH H SUB2 S AND HBR, HI, OR P SUB2 O SUB5 IN INERT SOLVENTS GIVES 2,R,3,R PRIME1, 4,R PRIME2, 5,R PRIME3, 6,R PRIME4, PENTASUBSTITUTED THIPYRANS, WHICH DISPROPORTIONATE IN ACID MEDIUM TO GIVE ONE MOL. OF THE CORRESPONDING TETRAHYDROTHIOPYRAN (I) AND 2 MOLS. OF THE CORRESPONDING THIOPYRYLIUM CHLORIDE PROPERTIES OF THE FOLLOWING I ARE GIVEN (R, R PRIME1, R PRIME2, R PRIME3, AND R PRIME4 GIVEN): PH, H, H, H, PH; PH, H, PH, H, PH; PH, H, ME, H, PH; ALSO R EQUALS PH, R PRIME1 EQUALS H, R PRIME2 EQUALS P,MEOC SUB6 H SUB4, (R PRIME3 R PRIME4 EQUALS) (CH SUB2) SUB4; R EQUALS PH, R PRIME1 EQUALS H, R PRIME2 EQUALS C SUB6 H SUB3 (OME) SUB2 3,4, (R PRIME3 R PRIME4 EQUALS) (CH SUB2) SUB4; AND (R EQUALS R PRIME1 EQUALS) (CH SUB2) SUB4, (R PRIME3 R PRIME4 EQUALS) (CH SUB2) SUB4, R PRIME2 EQUALS H OR ME.

FACILITY: SARATOV. POLITEKH. INST., SARATOV, USSR.

UNCLASSIFIED

APPROVED FOR RELEASE: 09/17/2001 CIA-RDP86-00513R002201630004-3"

"APPROVED FOR RELEASE: 09/17/2001 CIA-RDP86-00513R002201630004-3

UDC 621.791:669.295:621.78.062.3

USSR

KUPREYEV, V. P., Engineer, and POLYAKOV, D. A., Candidate of Technical Sciences, PETROV, A. V., Doctor of Technical Sciences, and VORONTSOV, V. V. Engineer

"Change of Protective Medium Composition During Welding of Titanium in Controlled Atmosphere Chambers"

Moscow, Svarochnoye Proizvodstvo, No 7, Jul 73, pp 24-26

Abstract: Investigation of controlled atmosphere welding of titanium was carried out in an USKS-2 unit with an operating chamber volume of 600 liters, equipped with a vacuum system which provided an operating pressure inside the chamber of 5-6 x 10^{-5} mm Hg for 130-140 minutes. During the welding process the concentration of water vapors was measured along with the concentrations of hydrogen, nitrogen, and oxygen. It was established that hydrogen content is increased as a result of the titanium reacting with the water vapors while the oxygen and nitrogen content was decreased. For a constant argon humidity in the chamber the quantity of hydrogen entering into the gas phase was proportional to the time of arc burning and its effective thermal capacity. An increase of water vapor in the argon by factors of 10 and 100 leads to a respective increase of factors of 2 and 4 of the amount of hydrogen entering

1/2

APPROVED FOR RELEASE: 09/17/2001 CIA-RDP86-00513R002201630004-3"

"APPROVED FOR RELEASE: 09/17/2001 CIA-RDP86-00513R002201630004-3

USSR

KUPREYEV, V. P., et al., Svarochnoye Proizvodstvo, No 7, Jul 73, pp 24-26

into the gas phase, other conditions being equal. 1 figure, 4 tables, 7 bibliographic references.

2/2

APPROVED FOR RELEASE: 09/17/2001 CIA-RDP86-00513R002201630004-3"

"APPROVED FOR RELEASE: 09/17/2001 CIA-RDP86-00513R002201630004-3

1/2 013 UNCLASSIFIED PROCESSING DATE--09OCT70

TITLE--ACCURATE DETERMINATION OF THE DENSITY OF WEAK SOLUTIONS AT VARIOUS TEMPERATURES -U-

AUTHOR-(05)-TERESHKEVICH, M.O., GARUS, L.I., DLUGACH, R.YE., KUPRIK, A.V., VOLKOVA, S.A.

COUNTRY OF INFO--USSR

SOURCE--ZH. PRIKL. KHIM. (LENINGRAD) 1970 43(1) 167-70

DATE PUBLISHED--------70

SUBJECT AREAS--PHYSICS

TOPIC TAGS--FLUID DENSITY MEASUREMENT, TEMPERATURE

CONTROL MARKING--NO RESTRICTIONS

DOCUMENT CLASS--UNCLASSIFIED

PROXY REEL/FRAME--1993/0300 STEP NO--UR/0080/70/043/001/0167/0170

CIRC ACCESSION NO--AP0113230

UNCLASSIFIED

APPROVED FOR RELEASE: 09/17/2001 CIA-RDP86-00513R002201630004-3"

"APPROVED FOR RELEASE: 09/17/2001 CIA-RDP86-00513R002201630004-3

2/2 013 UNCLASSIFIED PROCESSING DATE--09OCT70

CIRC ACCESSION NO--AP0113230

ABSTRACT/EXTRACT--(U) GP-0- ABSTRACT. A FLOTATION METHOD IS DESCRIBED FOR RAPID DETN. OF D. WITH AN ACCURACY OF 10 NEGATIVE PRIME5 G-CM PRIME3. THE D. OF SEVERAL HOLLOW QUARTZ FLOATS OF 10-12 MM LENGTH AND 1-2 MM DIAM. WAS CALIBRATED BY DETN. OF THE TEMP. AT WHICH THEY WOULD JUST FLOAT IN H SUB2 O. THE FLOATS WERE USED TO DET. THE D. OF AQ. SOLNS. OF K SUB2 CR SUB2 O SUB7 IN THE CONCN. RANGE 0.1 MINUS 0.2 G-L. AND TEMP. RANGE 10-35DEGREES. FACILITY: DNEPROPETROVSK. GOS. UNIV., DNEPROPETROVSK, USSR.

UNCLASSIFIED

APPROVED FOR RELEASE: 09/17/2001 CIA-RDP86-00513R002201630004-3"

"APPROVED FOR RELEASE: 09/17/2001 CIA-RDP86-00513R002201630004-3

USSR UDC: 681.3:31

KUPRIK, B. K.

"A Device for Statistical Processing and Analysis of Information"

Moscow, Otkrytiya, Izobreteniya, Promyshlennyye Obraztsy, Tovarnyye Znaki, No 6, Feb 72, Author's Certificate No 328445, Division G, filed 26 Sep 69, published 2 Feb 72, p 152

Translation: This Author's Certificate introduces a device for statistical processing and analysis of information represented, for instance, in the form of graphs or electric signals. The device contains an amplitude-to-frequency converter, a time-interval shaping module, coincidence circuits, a reference-frequency oscillator, measurement counters, a module for determining extrema, and a counter of the number of extremum values of the amplitudes of registered signals which is connected to decoders coupled to the output count matrix. As a distinguishing feature of the patent, the accuracy of processing and analyzing information is improved by connecting the amplitude-to-frequency converter to the input of the time-interval shaping module, whose outputs are connected to the inputs of the corresponding coincidence circuits, which are connected by their other inputs

1/2

APPROVED FOR RELEASE: 09/17/2001 CIA-RDP86-00513R002201630004-3"

"APPROVED FOR RELEASE: 09/17/2001 CIA-RDP86-00513R002201630004-3

USSR

KUPRIK, B. K., USSR Author's Certificate No 328445

to the reference-frequency oscillator and to one of the inputs of the module for determining extrema. The other inputs of the module for determining extrema are connected to the outputs of the corresponding coincidence circuits, and the outputs of this module are connected to the counter of the number of extremum values directly and to the inputs of the measurement counters through the corresponding coincidence circuits. The outputs of the measurement counters are connected to the inputs of the decoders.

2/2

APPROVED FOR RELEASE: 09/17/2001 CIA-RDP86-00513R002201630004-3"