"APPROVED FOR RELEASE: 08/09/2001 CIA-RDP86-00513R002201710012-5

JPRS 57208

6-73

4

IX-5. THERMODYNAMIC ANALYSIS OF THE CRYSTALLIZATION CONDITIONS OF SILICON CARBIDE

Article by K. A. Kuznetsov, Ya. M. Buchdan, T. V. Fedorova, G. N. Kuznetsov, Novosibirsk; Novosibirsk, III Simposium po Protsessam Rosta i Sintezu Poluprovodnikovyan Kristallov i Plenok, Russian, 12-17 June 1972, p 1[illegible]

A thermodynamic analysis was made of the deposition of silicon carbide from the gas phase considering all possible condensed phases and all gas compounds of significance.

The regions of realization of the different phase complexes were defined. Arguments were stated regarding the region of conditions favoring growth of perfect crystals. A qualitative comparison of the calculations with the available experimental results was made.

KUZNETSOV, F.A.

APPROVED FOR RELEASE: 08/09/2001 CIA-RDP86-00513R002201710012-5"

"APPROVED FOR RELEASE: 08/09/2001 CIA-RDP86-00513R002201710012-5

JPRS 57208
6-73

SESSION II

II-1. COMPARISON OF THE RESULTS OF THERMODYNAMIC ANALYSIS WITH EXPERIMENTAL DATA WITH RESPECT TO SILICON GROWTH BY THE CHLORIDE METHOD

[Article by G. A. Kukovin, T. V. Fadorova, P. A. Kuznetsov, Novosibirsk; Novosibirsk, III Simposium po Protsessam Rosta i Sintezy Poluprovodnikovykh Kristallov i Plenok, Russian, 12-17 June, 1972, p 11]

Frequently the thermodynamic analysis can not be carried out correctly as a result of the absence of external thermodynamic data for the substances participating in the transport process. In these cases it turns out to be useful to use the apparatus of thermodynamic analysis to approximate the available experimental results with respect to growth or etching and calculation of the integral characteristics of the chemical transport process on the basis of it. The expediency and effectiveness of this approach are illustrated in the example of the silicon-chlorine-hydrogen system.

KUZNETSOV, F.A.

APPROVED FOR RELEASE: 08/09/2001 CIA-RDP86-00513R002201710012-5"

"APPROVED FOR RELEASE: 08/09/2001 CIA-RDP86-00513R002201710012-5

JPRS 5/1268
6-73

7

SESSION X

X-1. STUDY OF THE MICROMORPHOLOGY AND DISTRIBUTION OF ANIMATORES IN EPITAXIAL AND GALLIUM ARSENIDE AS A FUNCTION OF THE GROWTH TIME

[Article by L. G. Lavrent'yeva, M. D. Vilisova, I. V. Ivonin, D. M. Krasil'nikova, F. A. Kuznetsov, Yu. N. Rumyantsev, M. F. Yakubenya, Tomsk, Novosibirsk: Novosibirsk, III Simposium po Fruktsiyam Rosta i Sintezu Poluprovodnikovyan Kristallov i Plenok, Kazan, [illegible]]

A study was made of the epitaxial layers of gallium arsenide grown in an open iodide system on substrates deflection by 2degrees from (111)A in the (110) direction. The growth time varied from one minute to three hours.

It was demonstrated that for all growth times beginning with one minute, the growth of the layers of the given orientation takes place by shifting of the parallel steps. There are a number of growth defects leading to disturbance in the ordered motion of the steps. These are the growth holes, the growth hills and some centers of retardation of the steps in which the steps form local pileups and loops. There is a significant rearrangement of the surface of the growing layer with growth time — the growth hills and holes disappear, the density of the centers of retardation of the steps decrease, and the configuration of the steps changes. The rearrangement of the surface of the layers is accompanied by variation in alloying level. A clear correlation has been established between the electron concentration in the layer and the density of the centers of retardation of the steps. The observed correlation indicates that the nonuniformity of alloying and the formation of the transition layer can be connected with growth defects and their effect on the motion of the growth steps.

KUZNETSOV, F.A.

APPROVED FOR RELEASE: 08/09/2001 CIA-RDP86-00513R002201710012-5"

"APPROVED FOR RELEASE: 08/09/2001 CIA-RDP86-00513R002201710012-5

KUZNETSOV, F.A.

6-73

XIV-6. EFFECT OF THE CRYSTALLIZATION TEMPERATURE ON THE ELECTROPHYSICAL PROPERTIES AND MORPHOLOGY OF EPITAXIAL GALLIUM ARSENIDE

[Article by L. G. Lavrent'yeva, I. Z. [illegible], Yu. G. Ratavov, L. H. Krasil'nikova, F. A. [illegible], Yu. M. Rumyanitsev, A. U. Zhurkov, N. P. Yakubenya, [illegible] Novosibirsk: Novosibirsk, III Simpozium po Protsessam Rosta i Sinteza Poluprovodnikovykh Kristallov i Plenok, Russian, 12-17 June 1972, p [illegible]]

Studies were made of the micromorphology and the distribution of the admixture with respect to thickness of the autoepitaxial layers of gallium arsenide with the (1.075; 1, 1) A orientation as a function of the crystallization temperature in the GaAs-Hi-H_2 system. The epitaxy temperature varied within the range of 600-730° C; here, the thermodynamic supersaturation was kept constant.

For the stationary section, the optimal temperature range (675-700° C) is observed at which the layers grow more perfect with respect to structure, with the greatest clarity, irregular system of growth stages on the surface, and with maximum admixture concentration and maximum electron mobility. In the case of a reduction in the crystallization temperature from optimal, the growth stages are exhibited more weakly, the growth rate drops, and the alloying level increases. The increase in temperature above optimal leads to local isolation of the second phase, inhibition of the growth stages in these sections and destruction of the regularity. Here, the growth rate decreases, and the alloying metal increases.

Thus, an analysis of the results shows that the clear correlation is observed between the investigated characteristics. One of the important regulators of capture of the admixture by the growing layer is the surface microstructure and the mechanism of its growth.

APPROVED FOR RELEASE: 08/09/2001 CIA-RDP86-00513R002201710012-5"

"APPROVED FOR RELEASE: 08/09/2001 CIA-RDP86-00513R002201710012-5

USSR

UDC: 621.386.12:548.73.08

KUZNETSOV, F. I., SMIRNOVA, Z. F., and MYASNIKOV, YU. G.

"The Mars-2 X-ray Unit"

V sb. Apparatura i metody rentgenovsk. analiza (Equipment and Methods of X-ray Analysis -- collection of works), Vyp.11, Leningrad, "Mashinostroyeniye", 1972, pp 39-43 (from RZh-32.Metrologiya i Izmeritel'naya Tekhnika, No 5, 1973, Abstract No 5.32.892)

Translation: The authors present a description of the Mars-2 bench type x-ray unit with an x-ray radiation generator of 0.1 kw output in the form of the BSV-7 sealed off, sharp-focus tube. The x-ray unit ensures the supply of uniformly controllable voltage to the tube within the 0 to 50 kv limits. The anode current is regulated by the supply of direct current with a 0-125v shift to the forcing electrode of the tube. The standard deviation from the given voltage value and the anode current for 12 hours of continuous operation does not exceed 2 percent. An example is given of using the unit in the realization of the high-resolution topographic Lang method. Original article: three illustrations and two bibliographic entries. Resume.

1/1

APPROVED FOR RELEASE: 08/09/2001 CIA-RDP86-00513R002201710012-5"

"APPROVED FOR RELEASE: 08/09/2001 CIA-RDP86-00513R002201710012-5

AA 0040726 K Kuznetsov, G.A.

UR 0482

Soviet Inventions Illustrated, Section I Chemical, Derwent, 1-70

242344 COOLING FRAME FOR INSIDE CASTINGS composed of parallel members (1) whose compartments (2) are free transversely to form vertical channels; the cross areas of these compartments reduce in stages from the top down starting at the feeder head. This allows directed access of molten metal to parts of the mould furthest from the feeder head. The staged reduction ensures that the lower compartments (a-a) harden first, allowing metal in from the central compartments (2a-a) and so on up.

4.7.66 as 1089813/22-2. VASILEVSKII.P.F.et al.CENTRAL ENGINEERING TECHNOLOGY INST. (11.9.69) Bul 15/25.4.69 Class 31b^2. Int.Cl.B 22d.

1/3

18

19750376

APPROVED FOR RELEASE: 08/09/2001 CIA-RDP86-00513R002201710012-5"

"APPROVED FOR RELEASE: 08/09/2001 CIA-RDP86-00513R002201710012-5

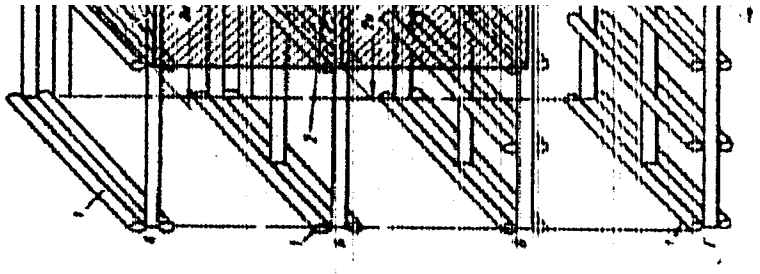

3/3

19750377

4D

APPROVED FOR RELEASE: 08/09/2001 CIA-RDP86-00513R002201710012-5"

"APPROVED FOR RELEASE: 08/09/2001 CIA-RDP86-00513R002201710012-5

AA0040726

AUTHORS: Vasilevskiy, P. F.; Kuznetsov, G. A.; Shiryayev, V. V.; Blokhin, I. Ye.; Bel'tsov, P. P.; and Litvyakova, O. N.

Tsentralnyy Nauchno - Issledovatel'skiy Institut Tekhnologii Mashinostroyeniya

19750378

APPROVED FOR RELEASE: 08/09/2001 CIA-RDP86-00513R002201710012-5".

AA0040726

"APPROVED FOR RELEASE: 08/09/2001 CIA-RDP86-00513R002201710012-5

1/2 042 UNCLASSIFIED PROCESSING DATE--23OCT70

TITLE--RHEOLOGICAL PROPERTIES OF POLY M, PHENYLENEISOPHTHALAMIDE -U-

AUTHOR-(04)-FOMENKO, L.N., GERASIMOV, V.D., KUZNETSOV, G.A., SOKOLOV, L.B.

COUNTRY OF INFO--USSR

SOURCE--PLAST. MASSY 1970, (3), 27-30

DATE PUBLISHED--------70

SUBJECT AREAS--CHEMISTRY, MATERIALS

TOPIC TAGS--POLYMER RHEOLOGY, POLYPHENYENE RESIN, AMIDE, SHEAR STRESS, VISCOMETER, MACROMOLECULE, MOLECULAR WEIGHT, HYDRODYNAMIC PROPERTY, CRYSTALLIZATION, VISCOUS FLOW

CONTROL MARKING--NO RESTRICTIONS

DOCUMENT CLASS--UNCLASSIFIED

PROXY REEL/FRAME--1997/0658 STEP NO--UR/0191/70/000/003/0027/0030

CIRC ACCESSION NO--AP0119566

UNCLASSIFIED

APPROVED FOR RELEASE: 08/09/2001 CIA-RDP86-00513R002201710012-5"

"APPROVED FOR RELEASE: 08/09/2001 CIA-RDP86-00513R002201710012-5

2/2 042 UNCLASSIFIED PROCESSING DATE--23OCT70

CIRC ACCESSION NO--AP0119566

ABSTRACT/EXTRACT--(U) GP-0- ABSTRACT. THE RHEOL. PROPERTIES OF THE TITLE POLYMER (I) WERE STUDIED IN A WIDE RANGE OF TEMPS. AND SHEAR RATES. AT A STRESS LARGER THAN 3 TIMES 10 PRIME7 DYNE-CM PRIME2 I BAGAN TO CRYSTALLIZE IN THE VISCOMETER AND WAS NO LONGER FLUID, PRESUMABLY DUE TO STRAIGHTENING AND ORIENTATION OF MACROMOLS. IN A HYDRODYNAMIC FIELD. UNDER ALTERNATIVE CONDITIONS (I.E., WHEN THERE WAS CRYSTN.), THE RHEOL. PROPERTIES OF I RESEMBLED THOSE OF MOST OTHER POLYMERS. THE VISCOUS FLOW OF I WAS AN EXPOENTIAL FUNCTION OF THE MOL. WT.

UNCLASSIFIED

APPROVED FOR RELEASE: 08/09/2001 CIA-RDP86-00513R002201710012-5"

"APPROVED FOR RELEASE: 08/09/2001 CIA-RDP86-00513R002201710012-5

USSR

UDC 539.376+532.135

KUZNETSOV, G. B., POZDEYEV, A. A.

"Characteristics of the Deformation of Low-Modular Polymer Materials"

Sb. nauch. tr. Perm. politekhn. in-t (Collection of Scientific Works. Perm' Polytechnical Institute), 1971, No. 98, pp 82-87 (from RZh-Mekhanika, No 3, Mar 72, Abstract No 3V699)

Translation: An attempt is made to evaluate the applicability of a certain nonlinear equation to describe the deformation properties of actual polymer materials. The equation is a combination of the Rabotnov and the Liderman-Rozovskiy equations

$$\varphi[\varepsilon(t)] = \psi[\sigma(t)] + \int_0^t K(t-\tau)\,\psi[\sigma(\tau)]\,d\tau$$

where the functions ϕ, ψ and the kernel of K are chosen in the following form: $\phi(\varepsilon) = \varepsilon/(\varepsilon + B)$, $\psi(\sigma) = \sigma/(\sigma + \gamma)$, $K(x) = A(1 - \lambda)/x^{\lambda}$, B, γ, A and λ are constants. It is shown, as one would expect, that the given equation qualitatively describes the experimentally observed characteristics of the deformation of polymer materials in linear and nonlinear regions under various test regimes

1/2

APPROVED FOR RELEASE: 08/09/2001 CIA-RDP86-00513R002201710012-5"

"APPROVED FOR RELEASE: 08/09/2001 CIA-RDP86-00513R002201710012-5

USSR

KUZNETSOV, G. B., POZDEYEV, A. A., Sb. nauch. tr. Perm. politekhn. in-t, 1971, No. 98, pp 82-87

(creep, stress relaxation, σ-ε diagrams). The hypothesis is made relative to the functions ϕ and ψ and similar to the Bronskiy hypothesis of the applicability of these functions to linear hereditary media, i.e., it is proposed that the following equality is valid for conditions of relaxation of stresses and creep

$$\psi[\sigma(t)]\phi[\varepsilon(t)] = \psi(\sigma_0)\phi(\varepsilon_0)$$

where the functions $\phi(\varepsilon_0)$ and $\psi(\sigma_0)$ refer to the time $t = 0$. 5 ref. I. M. Kershteyn.

2/2

APPROVED FOR RELEASE: 08/09/2001 CIA-RDP86-00513R002201710012-5"

"APPROVED FOR RELEASE: 08/09/2001 CIA-RDP86-00513R002201710012-5

Heat Treatment

K

USSR UDC 621.785.538.062.57:669.28

KUZNETSOV, G. D., BABAD-ZAKHRYAPIN, A. A., and LAGUTKIN, K. I. (Moscow Institute for Automobiles-Roads)

"Carburizing Molybdenum in a Glow Discharge Plasma"

Moscow, Metallovedeniye i termicheskaya obrabotka metallov, No 6, 1970, pp 10-12

Abstract: An investigation was made of the molybdenum carburizing process in a glow discharge plasma, taking into account the possible formation of a pyrocarbon layer on the surface. Methane was used as the plasma producing gas. A schematic diagram of the discharge setup is presented and the experimental procedure is briefly described. At 1300-1600°C the carbide layer thickness in the presence of glow discharge and in its absence was approximately the same. An increase in the discharge temperature led to a sharp decline in the carbide layer thickness, while above 1700° its formation was stopped. The absence of the discharge effect on the carburizing kinetics at 1300-1600°C is explained by the formation of a pyrocarbon layer on the surface. The time dependence of the Mo_2C layer under conditions of glow discharge and without was practically the same being close to the parabolic. An analysis of the results shows that heating of the molybdenum in a methane glow discharge plasma makes it possible to saturate the metal by carbon, to fully eliminate the metal-media interaction, and to decarburize the

1/2

APPROVED FOR RELEASE: 08/09/2001 CIA-RDP86-00513R002201710012-5"

"APPROVED FOR RELEASE: 08/09/2001 CIA-RDP86-00513R002201710012-5

USSR

KUZNETSOV, G. D., et al., Metallovedeniye i termicheskaya obrabotka metallov, No 6, 1970, pp 10-12

carbon-saturated surface layer. Further, the carburizing process can be strongly intensified with a certain combination of discharge parameters. 6 figures, 5 references.

2/2

APPROVED FOR RELEASE: 08/09/2001 CIA-RDP86-00513R002201710012-5"

"APPROVED FOR RELEASE: 08/09/2001 CIA-RDP86-00513R002201710012-5

JPRS 57263

6-73

KUZNETSOV, G.F.

VIII-8. DEFECT STRUCTURE OF SINGLE CRYSTALS OF GaSb

[Article by G. F. Kuznetsov, Institute of Radio Engineering and Electronics of the USSR Academy of Sciences, Moscow; Novosibirsk, III Simpozium po Protezhnosti Rosta i Sinteza Poluprovodnikovykh Kristallov i Plenok, Russian, 12-17 June 1972, p 109]

Single crystals of p-type grown GaSb have been obtained by the Czochralski method with alloying with zinc to a hole concentration of $p = 1.5 \cdot 10^{19}$ cm^{-3}. The GaSb plates 250 microns thick were cut along the {001} and the {111} planes. The defects in the crystal lattice were investigated by the Borman method with scanning of the GaSb plates in the collimated MoK α_1-radiation.

In the investigated single GaSb crystals, extraordinarily nonuniform dislocation distribution was detected. In the peripheral region of the monocrystalline bar, the dislocation density reaches a value of $1.5 \cdot 10^{5}$ cm^{-2}. Near the periphery of the crystal, the dislocation density drops sharply to $2 \cdot 10^{3}$ cm^{-2}. In this single crystal, dislocationless regions are observed up to 15 mm in diameter. In addition, in single GaSb crystals, twinning layers are detected which are oriented along the {$\bar{1}\bar{1}0$} direction trend. Within the limits of the twinning layer the dislocation density varies from 10^{3} to 10^{6} cm^{-2}. Near the boundaries of the twinning layers the dislocations sometimes form rectangular grids. The dislocations in the dense pileups are depicted in the form of short rectilinear segments. The majority of depicted dislocations have a Bourguer vector of the $a/2$<110> type, and they are located in the planes of the {$\bar{1}\bar{1}1$} type.

The detected characteristics of the defect structure must be considered when interpreting the results of measuring the electrical properties of single crystals of grown GaSb.

APPROVED FOR RELEASE: 08/09/2001 CIA-RDP86-00513R002201710012-5"

"APPROVED FOR RELEASE: 08/09/2001 CIA-RDP86-00513R002201710012-5

JPRS 62203

1-73

VIII-7. DISTRIBUTION OF DISLOCATIONS IN SINGLE CRYSTALS OF GALLIUM ARSENIDE ALLOYED WITH CHROMIUM OR TIN

[Article by G. F. Kuznetsov, B. I. Zhelin, Institute of Radio Engineering and Electronics of the Academy of Sciences, Moscow; Novosibirsk, III Simposium po Protsessam Rosta i Sintezu Poluprovodnikovykh Kristallov i Plenok, Russian, 12-17 June 1972, p 108]

The X-ray topographic Berg method was used to study the characteristic features of the defect structure of single crystals of semiconducting GaAs alloyed with Cr($\rho = 10^6$ ohm-cm) and conducting crystals of GaAs alloyed with Sn to $n = 10^{18}$ cm^{-3}. The single crystals were grown by the Czochralski technique under industrial conditions. The interest in these crystals was caused by the fact that they are used as substrates when growing autoepitaxial monocrystalline layers of GaAs.

Along with some general features, the distribution of the dislocations in single GaAs crystals alloyed with Cr differ significantly from the distribution distribution in single GaAs crystals alloyed with Sn. The basic feature of the dislocation distribution in single GaAs crystals alloyed with Cr is the well-developed cellular structure. The cell dimensions in the investigated GaAs bars vary from 50 to 900 microns from bar to bar, and also with respect to cross section and length of one bar. The characteristic feature of the defect structure of single GaAs crystals alloyed with Sn is the extraordinary inhomogeneity of the dislocation distribution with respect to volume of the bar. In these crystals regions extending for several millimeters with very low dislocation density $\Sigma = 10$ cm^{-2} whereas in the adjacent regions of the dislocation crystal interacting with each other, dislocation grids are formed. In other regions the dislocations are distributed randomly and have a set of inflections. In the single GaAs crystals alloyed with Sn, ordered [illegible] of mutually parallel segments of the dislocations are observed in narrow bands. The difference in the dislocation distribution in GaAs crystals alloyed with Cr and Sn can be explained by the fact that the donor admixture Sn essentially increases the upper fatigue strength of GaAs and, consequently, prevents transmission of the plastic flow in these crystals. The compensating additive Cr obviously lowers the fatigue strength and therefore promotes rearrangement of the dislocations into interlacings bordering the cell boundaries.

KUZNETSOV G.F.

APPROVED FOR RELEASE: 08/09/2001 CIA-RDP86-00513R002201710012-5"

"APPROVED FOR RELEASE: 08/09/2001 CIA-RDP86-00513R002201710012-5

JPRS 57208
6-73

VII-7b. EFFECT OF THE DEFECT STRUCTURE OF THE SUBSTRATES ON THE ELECTRICAL PROPERTIES OF AUTOEPITAXIAL GaAs

[Article by G. F. Kuznetsov, A. A. Telegin, B. I. Khislin, L. S. Telegina, Institute of Radio Engineering and Electronics of the USSR Academy of Sciences, Moscow; Novosibirsk, III Simposium po Protsessam Rosta i Sinteza Poluprovodnikovykh Kristallov i Plenok, Russian, 12-17 June, 1972, p 95]

Substrates with an orientation of [001] were manufactured from single crystal of semiinsulating GaAs alloy with Cr. The defect structure of the substrates was studied by the Barman x-ray topographic method. The epitaxial monocrystalline films of GaAs were grown by the open chloride method. In one experiment the films were grown on substrates from 2-3 monocrystalline bars with a different defect structure. The mobility of the carriers was measured at 300° K and 77° K.

In the investigated crystals the dislocations form interlacings by which the crystal is divided into regions of the cellular type. The cells mentioned in the various bars vary from 30 to 900 microns. The extremal values of the mobility (to $1 \cdot 10^5$ cm^2/v-sec at 77° K) can be obtained in GaAs films grown on substrates with large cellular structure (hundreds of microns). On the substrates with small cell dimensions (tens of microns), GaAs films with less mobility are systematically obtained under the same conditions.

KUZNETSOV, G.F.

APPROVED FOR RELEASE: 08/09/2001 CIA-RDP86-00513R002201710012-5"

"APPROVED FOR RELEASE: 08/09/2001 CIA-RDP86-00513R002201710012-5

3PRS 57208

6-13

KV-7. STUDY OF MONOCRYSTALLINE LAYERS OF A^2B^6 SEMICONDUCTING COMPOUNDS BY THE X-RAY METHODS

[Article by I. M. Kotelyanskiy, V. D. Strygin, G. F. Kuznetsov, Institute of Radioengineering and Electronics of the USSR Academy of Sciences, Moscow; Novosibirsk. III Simposium po Protsessam Rosta i Sinteza Poluprovodnikovyan Kristallov i Plenok, Russian, 22-27 June 1972, p 218]

The methods of x-ray diffraction measurement and Laue diffraction patterns were used to study the orientation crystallographic ratios of the heteroepitaxy of monocrystalline layers of semiconducting compounds CdS, CdSe and ZnO on substrates of single crystals of cubic syngony. The laws of the crystallographic ratios are found and they are discussed.

The results are presented from studying the defective structure of epitaxial layers by the Fujiwara method without separation of them from the substrates.

KUZNETSOV, G.F.

APPROVED FOR RELEASE: 08/09/2001 CIA-RDP86-00513R002201710012-5"

"APPROVED FOR RELEASE: 08/09/2001 CIA-RDP86-00513R002201710012-5

3 PRS 59263
6 13

4

XIV-16. GROWTH AND DEFECT STRUCTURE OF HETEROEPITAXIAL CdTe FILMS

[Article by Yu. Sh. Tsaitov, G. F. Kuznetsov, B.I. Khislin, S. A. Ayikhoshin, Institute of Radioengineering and Electronics of the USSR Academy of Sciences, Moscow; Sovetskiye, III Simpozium po Protsessam Rosta i Sinteza Poluprovodnikovyeh Kristallov i Plenok, Russian, 12-17 June 1972, p 208]

The sublimation method in a hydrogen current was used to obtain fully film on synthetic mica — fluorophlogopite. Monocrystalline CdTe films were grown with two different temperatures of the deposition zone. It was demonstrated metallographically that in both cases there are growth configurations on the film surface. The increase in temperature of the substrate zone leads to an increase in the linear dimensions of the growth configuration, and it is accompanied by an increase in the surface relief. The defect structure of the heteroepitaxial CdTe films was studied by the Fujiwara method without separation of the film from the substrate. It was discovered that the dimensions and angles of disorientation of the subgrains depend on the temperature of the deposition zone.

KUZNETSOV, G.F.

APPROVED FOR RELEASE: 08/09/2001 CIA-RDP86-00513R002201710012-5"

"APPROVED FOR RELEASE: 08/09/2001 CIA-RDP86-00513R002201710012-5

TITLE--PREPARATION AND STUDY OF BARIUM STRONTIUM NIOBATE SINGLE CRYSTALS
-U-

AUTHOR-(05)-DUDNIK, O.F., GROMOV, A.K., KRAVCHENKO, V.B., KOPYLOV, YU.L.,
KUZNETSOV, G.F.

COUNTRY OF INFO--USSR

SOURCE--KRISTALLOGRAFIYA 1970, 15(2), 386-8

DATE PUBLISHED--------70

SUBJECT AREAS--PHYSICS

TOPIC TAGS--NIBIUM COMPOUND, BARIUM COMPOUND, STRONTIUM COMPOUND, CURIE
POINT, SINGLE CRYSTAL GROWTH, DIELECTRIC CONSTANT

CONTROL MARKING--NO RESTRICTIONS

DOCUMENT CLASS--UNCLASSIFIED
PROXY REEL/FRAME--2000/1566 STEP NO--UR/0070/70/015/002/0386/0388

IRC ACCESSION NO--AP0125192

UNCLASSIFIED

APPROVED FOR RELEASE: 08/09/2001 CIA-RDP86-00513R002201710012-5"

"APPROVED FOR RELEASE: 08/09/2001 CIA-RDP86-00513R002201710012-5

UNCLASSIFIED

IRC ACCESSION NO--AP0125192 PROCESSING DATE--30OCT70

BSTRACT/EXTRACT--(U) GP-0- ABSTRACT. SINGLE CRYSTALS OF BA SUBX SR SUB1-X NB SUB2 O SUB6 WERE GROWN BY THE CZOCHRALSKI METHOD IN AN INDUCTION FURNACE FROM POWD. MIXTS. OF NB SUB2 O SUB5, SRCO SUB3, AND BACO SUB3. WHEN USING PT CRUCIBLES, COLORLESS CRYSTALS WERE OBTAINED, AND IN IR CURCIBLES, DARK AMBER ONES. THE HABIT OF THE CRYSTALS WAS DETD. BY 24 FACES OF 4 PRISMS: (110), (120), (100), AND (130), THESE FACES BEING DIFFERENTLY DEVELOPED FOR CRYSTALS OF DIFFERENT COMPN. TEMP. DEPENDENCES OF DIELEC. CONSTS. ALONG THE C AXIS (EPSILON SUBC) AND ALONG THE ALPHA AXIS (EPSILON SUBALPHA) WERE DETD., AS WELL AS CURIE TEMPS.: FOR BA SUB0.25 SR SUB0.75 NB SUB2 O SUB6, 56 PLUS OR MINUS 3DEGREES; FOR BA SUB0.5 SR SUB0.5 NB SUB2 O SUB6, 119 PLUS OR MINUS 3DEGREES; FOR BA SUB0.75 SR SUB0.25 NB SUB2 O SUB6, 205 PLUS OR MINUS 3DEGREES. WITH INCREASING CURIE TEMP., AN INCREASE IN PEAK EPSILON SUBC VALUES WAS OBSD., AND DECREASE IN EPSILON SUBC VALUES AT ROOM TEMP. THE EPSILON VALUE ALONG THE ALPHA AXIS IS MUCH LESS THAN ALONG THE C AXIS, AND THE DIELEC. ANOMALY ALONG THE ALPHA AXIS IS VERY SLIGHT.

FACILITY: INST. RADIOTEKH. ELECTRON., MOSCOW, USSR.

UNCLASSIFIED

APPROVED FOR RELEASE: 08/09/2001 CIA-RDP86-00513R002201710012-5"

"APPROVED FOR RELEASE: 08/09/2001 CIA-RDP86-00513R002201710012-5

USSR

UDC 620.194

SHUSTOVA, Z. F., KUZNETSOV, G. G., ROZENFEL'D, I. L., and FRIDMAN, V. S., Academy of Sciences USSR, Institute of Physical Chemistry

"The Tendency of Type EP-65 Steel to Corrosion Cracking"

Moscow, Zashchita Metallov, Vol 7, No 2, Mar-Apr, 1971, pp 183-187.

Abstract: The authors studied the tendency of specimens of EP-65 steel and welded joints of the steel to corrosion cracking, as well as methods of corrosion protection of this metal. EP-65 steel is a Martensitic steel based on 12% chromium with Ni, W, Mo and V. The tests were performed by periodic submersion in sea water, exposure to an atmospheric salt fog and exposure to a moist atmosphere without salt. The welded joints were found to be more inclined to corrosion cracking than the base metal. The main factor influencing the corrosion cracking of welded joints is the heat treatment used after welding, not the method of welding. Welded joints hardened in air from 1050° then tempered at 300° show corrosion cracking resistance almost as good as the base metal. The best protection for the metals and welded joints consists of a narrow strip of zinc coating on the welded joint, plus one base coat and three coats of enamel over the entire surface of the object.

1/1

APPROVED FOR RELEASE: 08/09/2001 CIA-RDP86-00513R002201710012-5"

"APPROVED FOR RELEASE: 08/09/2001 CIA-RDP86-00513R002201710012-5

USSR

UDC 62-52:003.13

KUZNETSOV, G. G., PEREVERZEV, YU. V., KONSTANTINOVSKIY, L. B., and VAYNBLAT, B. I., Engineers

"Calculation of Efficiency of Using Automatic Data Transmission Networks"

Moscow, Mekhanizatsiya i Avtomatizatsiya Proizvodstva, No 9, 1971, pp 36-37

Abstract: The article considers the efficiency of replacing ordinary data transmission methods (for example, by telephone) with automatic transmission in fixed- and variable-routing networks. The savings achieved by automatic data transmission are calculated as a function of the cost of transmitting the equivalent amount of information by telephone between the same subscribers.

1/1

APPROVED FOR RELEASE: 08/09/2001 CIA-RDP86-00513R002201710012-5"

"APPROVED FOR RELEASE: 08/09/2001 CIA-RDP86-00513R002201710012-5

USSR

UDC 620.194

SHUSTOVA, Z. F., KUZNETSOV, G. G., ROZENFEL'D, I. L., and FRIDMAN, V. S., Academy of Sciences USSR, Institute of Physical Chemistry

"The Tendency of Type EP-65 Steel to Corrosion Cracking"

Moscow, Zashchita Metallov, Vol 7, No 2, Mar-Apr, 1971, pp 183-187.

Abstract: The authors studied the tendency of specimens of EP-65 steel and welded joints of the steel to corrosion cracking, as well as methods of corrosion protection of this metal. EP-65 steel is a Martensitic steel based on 12% chromium with Ni, W, Mo and V. The tests were performed by periodic submersion in sea water, exposure to an atmospheric salt fog and exposure to a moist atmosphere without salt. The welded joints were found to be more inclined to corrosion cracking than the base metal. The main factor influencing the corrosion cracking of welded joints is the heat treatment used after welding, not the method of welding. Welded joints hardened in air from 1050° than tempered at 300° show corrosion cracking resistance almost as good as the base metal. The best protection for the metals and welded joints consists of a narrow strip of zinc coating on the welded joint, plus one base coat and three coats of enamel over the entire surface of the object.

1/1

APPROVED FOR RELEASE: 08/09/2001 CIA-RDP86-00513R002201710012-5"

"APPROVED FOR RELEASE: 08/09/2001 CIA-RDP86-00513R002201710012-5

USSR

UDC 669.14.018.8

SHUSTOVA, Z. F., SINYAVINA, R. A., YEMEL'YANOVA, V. A., ROZENFELD, I. L., KUZNETSOV, G. G., RAYMOND, E. D., and NEFEDOV, V. P.

"Inclination toward Stress Corrosion Cracking of 1Kh16N4B (EP-56) High-Strength Stainless Steel"

Moscow, Zashchita Metallov, Vol 6, No 6, Nov-Dec 70, pp 696-700

Abstract: This article contains the results of a study of the effect of heat treatment conditions on the inclination of welded joints of 1Kh16N4B steel to stress corrosion cracking. This steel is a high-strength steel of the martensitic class heat-treated by quenching from 950-1,050° and annealing at 300 or 600°. The stress-rupture strength of the steel is $\geq$ 120 kg/mm^2 in the former case and $\geq$ 100 kg/mm^2 in the latter case. It was established earlier that neither the basic metal nor the welded joints of this steel in the fully heat-treated state were inclined to stress corrosion cracking. In the present investigation the inclination toward stress corrosion cracking was evaluated by the time of occurrence of cracks in the welded joint in a saline mist at room temperature.

From the tabulated data it is noted that unannealed samples and samples annealed at 300° exhibit an inclination toward stress corrosion cracking.

1/3

APPROVED FOR RELEASE: 08/09/2001 CIA-RDP86-00513R002201710012-5"

"APPROVED FOR RELEASE: 08/09/2001 CIA-RDP86-00513R002201710012-5

USSR

SHUSTOVA, Z. F., et al., Zashchita Metallov, Vol 6, No 6, Nov-Dec 70, pp 696-700

Welded joints annealed at 600° are not inclined to such cracking. Figures are presented showing the microstructure of a welded joint made of 1Kh16N4B steel and the hardness distribution in the welded joint. Comparison of metallographic and corrosion studies shows that the section near the weld subjected to heating in the temperature range of 475-550° is distinguished by lower corrosion resistance. It is possible to decrease the tendency toward corrosion cracking of 1Kh16N4B steel joints not only by high temperature annealing (600°) but also by high temperature quenching of the steel before welding. The tendency of the welded joints toward corrosion cracking was found to depend on the structural state of the basic metal before welding. A table is presented showing the effect of slow cooling and induced heating on the stress corrosion cracking of 1Kh16N4B thick sheet steel in a saline mist atmosphere.

It is concluded that welded joints of 1Kh16N4B steel made of material with a strength of 100 kg/mm^2 and annealed at 300 and 600° are not inclined to stress corrosion. Slow cooling of the steel during quenching increases the tendency of the unannealed and low-temperature (300°) annealed welded joints to stress corrosion cracking. Heating 1Kh16N4B steel subjected to high tempera-

2/3

APPROVED FOR RELEASE: 08/09/2001 CIA-RDP86-00513R002201710012-5"

"APPROVED FOR RELEASE: 08/09/2001 CIA-RDP86-00513R002201710012-5

USSR

SHUSTOVA, Z. F., et al., Zashchita Metallov, Vol 6, No 6, Nov-Dec 70, pp 696-700

ture annealing in the 475-550° range can cause a tendency toward corrosion under stress. When quenching with slow cooling the inclination toward cracking is exhibited after a short delay (5 minutes) at 475-550°. In the case of air quenching this inclination is exhibited after a longer period (2 hours).

3/3

APPROVED FOR RELEASE: 08/09/2001 CIA-RDP86-00513R002201710012-5"

"APPROVED FOR RELEASE: 08/09/2001 CIA-RDP86-00513R002201710012-5

USSR

UDC 678.046:539.38

KUZNETSOV, G. K., and IRGEN, L. A., Institute of Mechanics of Polymers of ~~the Academy~~ of Sciences, Latvian Soviet Socialist Republic, Riga

"Relationship Between Some Mechanical and Thermophysical Properties of Polymer Composites with Reduced Filler Concentration"

Riga, Mekhanika Polimerov, No 3, May-Jun 73, pp 487-491

Abstract: A study was made of the relationships between the modulus of elasticity, the linear expansion coefficient, the vitrification temperature, the decomposition temperature of epoxy compositions and the concentration of four fillers (chalk, calcium metasilicate, carbon black, and Aerosil) of differen physical and chemical nature. The introduction of the fillers into epoxy resin essentially changes the composition temperature, the compression modulus in high-elastic state, and the coefficient of expansion, and it somewhat increases the vitrification temperature of the composition. The filler can be characterized by the critical concentration φ_{crit} at which the vitrification of the polymer under the influence of the surface propagates over the whole volume of the polymer matrix. The value of φ_{crit}

1/2

APPROVED FOR RELEASE: 08/09/2001 CIA-RDP86-00513R002201710012-5"

"APPROVED FOR RELEASE: 08/09/2001 CIA-RDP86-00513R002201710012-5

USSR

KUZNETSOV, G. K., and IRGEN, L. A., Mekhanika Polimerov, No 3, May-Jun 73, pp 487-191

determines the rate of the change of the composition properties on filling. By replacing the filler concentration φ with φ_{crit}, the dependence, invariant to the filler nature, of a series of material properties can be determined. Four figures, two tables, seven bibliographic references.

2/2

APPROVED FOR RELEASE: 08/09/2001 CIA-RDP86-00513R002201710012-5"

"APPROVED FOR RELEASE: 08/09/2001 CIA-RDP86-00513R002201710012-5

USSR

UDC 621.7.011

MASTEROV, V. A., PRILEPSKAYA, I. V., and KUZNETSOV, G. M., All-Union Correspondence Polytechnical Institute; Moscow Institute of Steels and Alloys

"Effect of Diffusion Due to Heating on the Strength of Joints Between Layers of Bimetals"

Moscow, Izvestiya Vysshikh Uchebnykh Zavedeniy, Chernaya Metallurgiya, No 1, 1971, pp 101-105

Abstract: The primary difficulty in producing and working with steel+aluminum, steel+titanium, aluminum+copper, and other bimetals is a decrease in tensile strength and a greater scatter in tensile strength data following the heating of these bimetals or their exposure to a higher temperature on welding the layers. Described here is a model based on the coagulation of excess vacancies in the weld-metal zone. The model is designed to explain the above changes. Use is made of a relationship between relative strength ($0<\beta>1$) and temperature and heating duration. The results of a microfractographic study conducted in parallel are in agreement with the model for measuring the strength of the bimetal. It is suggested that the reduction in strength and the lamination of the dissimilar metals is due to supersaturation with diffusible vacancies in the contact area.

1/1

APPROVED FOR RELEASE: 08/09/2001 CIA-RDP86-00513R002201710012-5"

"APPROVED FOR RELEASE: 08/09/2001 CIA-RDP86-00513R002201710012-5

USSR

UDC 669.715'782:620.186

KUZNETSOV, G. M., ROTENBERG, V. A., GERSHMAN, G. B., KHRUSHCHOVA, K. M., and ZIL'BERG, Yu. Ya., State Union Scientific Research Tractor Institute; Moscow Institute of Steel and Alloys

"Methods and Theories of the Modification of Hypereutectic Silumins"

V sb. Modifitsir. siluminov (Modification of Silumins -- Collection of Works), Kiev, 1970, pp 5-19 (from RZh-Metallurgiya, No 12, Dec 70, Abstract No 12 1746 by I. NABATOVA)

Translation: The authors consider in detail substances creating the effect of modification of hypereutectic Silumins and methods of introducing them. Modifiers of primary Si are P, copper phosphide (eutectic), reaction mixtures "alphosite," "phoral," a mixture of 52% Li_3PO_4 + 40% Al + 8% P, a mixture of Al_3PO_4 + $Mg_2P_2O_7$ + ethane C_2Cl_6 + copper phosphide, polytetrafluoroethylene + P + AlP; Be, Cu, Ag, Zn, Cd, Hg, Se, Te, Ca, Cd, Ge, Ti, S, P, and Na, as well as a mixture of eutectic Silumin with Al shavings in combination with Na, break up the Si and the eutectic simultaneously. The following hypothesis explaining the modification mechanism are discussed: 1) formation of nuclei of the AlP type; 2) connection with Al-Si-modifying-element phase diagrams; 1/2

APPROVED FOR RELEASE: 08/09/2001 CIA-RDP86-00513R002201710012-5"

"APPROVED FOR RELEASE: 08/09/2001 CIA-RDP86-00513R002201710012-5

USSR

KUZNETSOV, G. M., et al, V sb. Modifitsir. siluminov (Modification of Silumins — Collection of Works), Kiev, 1970, pp 5-19 (from RZh-Metallurgiya, No 12, Dec 70, Abstract No 12 1746 by I. NABATOVA)

3) limitation of the growth of Si crystals. The last hypothesis gives a fuller explanation of the experimental data. Two tables. Bibliography of 59 titles.

2/2

APPROVED FOR RELEASE: 08/09/2001 CIA-RDP86-00513R002201710012-5"

"APPROVED FOR RELEASE: 08/09/2001 CIA-RDP86-00513R002201710012-5

1/2 013 UNCLASSIFIED PROCESSING DATE--16OCT70

TITLE--LATTICE PARAMETERS AND ELECTRICAL PROPERTIES OF GALLIUM ARSENIDE BEFORE AND AFTER HEAT TREATMENT -U-

AUTHOR-(05)-KUZNETSOV, G.M., BARSUKOV, A.D., KANDYBA, G.I., VORONKOVA, G.M., BULATOVA, O.S.

COUNTRY OF INFO--USSR

K

SOURCE--IZV. AKAD. NAUK SSSR, NEORG. MATER. 1970, 7(3), 452-6

DATE PUBLISHED--------70

SUBJECT AREAS--MATERIALS

TOPIC TAGS--ELECTRIC PROPERTY, GALLIUM ARSENIDE, LATTICE PARAMETER

CONTROL MARKING--NO RESTRICTIONS

DOCUMENT CLASS--UNCLASSIFIED

PROXY REEL/FRAME--1996/0843 STEP NO--UR/0363/70/006/003/0452/0456

CIRC ACCESSION NO--AP0118019

UNCLASSIFIED

APPROVED FOR RELEASE: 08/09/2001 CIA-RDP86-00513R002201710012-5"

"APPROVED FOR RELEASE: 08/09/2001 CIA-RDP86-00513R002201710012-5

2/2 018 UNCLASSIFIED PROCESSING DATE--16OCT70

CIRC ACCESSION NO--AP0118019

ABSTRACT/EXTRACT--(U) GP-0- ABSTRACT. THE DEPENDENCE OF THE LATTICE PARAMETER OF UNDOPED GAAS ON CURRENT CARRIER CONCN. WAS INVESTIGATED. A SHARP DECREASE IN THE LATTICE PARAMETER IN THE CONCN. REGION OF (0.7-3) TIMES 10 PRIME15-CM PRIME3 WAS OBSD., WHICH IS ASSOCD. WITH AN INCREASE IN THE VACANCY CONCN. BY 1.44 TIMES 10 PRIME19-CM PRIME3. BY MAKING USE OF THE PREVIOUSLY REPORTED DATA, THE AT. VOL. OF THE VACANCIES IN GAAS WAS DETD. IT IS 0.767 RELATIVE TO THE AV. VOL. OF THE ATOM, WHICH IS IN GOOD AGREEMENT WITH THE RESULTS OF THE D. MEASUREMENTS. THE DEPENDENCE OF THE LATTICE PARAMETER AND THE ELEC. PROPERTIES OF GAAS ON AS VAPOR PRESSURE, P SUBAS, DURING THE ANNEALING PROCESS WAS INVESTIGATED. AT P SUBAS GREATER THAN 2 ATM THERE IS OBSD. AN INCREASE IN THE LATTICE PARAMETER BY 1 TIMES 10 PRIME NEGATIVE4 ANGSTROM, CORRESPONDING TO THE DECREASE IN THE VACANCY CONCN. BY 1 TIMES 10 PRIME19-CM PRIME3. THE CARRIER CONCN. IN SAMPLES SUBJECTED TO ANNEALING AT 700DEGREES FOR 7 HR DEPENDS ON THE P SUBAS AND IT INCREASES WITH INCREASING P SUBAS. ANNEALING AT P SUBAS GREATER THAN 2 ATM LEADS ALSO TO A SYSTEMATIC INCREASE IN THE CARRIER MOBILITY (TO 25PERCENT). FACILITY: MOSK, INST. STALI SPLAVOV, MOSCOW, USSR.

UNCLASSIFIED

APPROVED FOR RELEASE: 08/09/2001 CIA-RDP86-00513R002201710012-5"

"APPROVED FOR RELEASE: 08/09/2001 CIA-RDP86-00513R002201710012-5

USSR

K

[illegible]

FEDOTOV, Ya. A., [illegible], and [illegible]
of Steel and [illegible]

"Expitaxial [illegible] of [illegible] and [illegible]"

Moscow, Izvestiya Akademii Nauk SSSR, Neorganicheskiye Materialy, [illegible]
Jun 70, pp [illegible]

Abstract: [illegible] solutions of [illegible] by the method of [illegible] liquid [illegible] sufficiently [illegible] In addition, [illegible] solvent [illegible] creases with [illegible] of cooling, [illegible] temperature, [illegible] The dependence [illegible] phase compound [illegible] the system Sn-InAs-GaAs [illegible] shows that the films are highly annealed. An increased [illegible] film results in increased electron mobility.

1/1

APPROVED FOR RELEASE: 08/09/2001 CIA-RDP86-00513R002201710012-5"

"APPROVED FOR RELEASE: 08/09/2001 CIA-RDP86-00513R002201710012-5

JPRS 57268

6-73

4

II-5. THERMODYNAMIC ANALYSIS OF THE CRYSTALLIZATION CONDITIONS OF SILICON CARBIDE

(Article by E. A. Kuznetsov, Ya. M. Buchdan, T. V. Fedorova, G. N. Kuznetsov, Novosibirsk; Novosibirsk, III Simposium po Protsessam Rosta i Sistema Polupro-[illegible] Kristallov i Plenok, Russian, 12-17 June 1971, p 126)

A thermodynamic analysis was made of the deposition of silicon carbide from the gas phase considering all possible condensed phases and all gas compounds of significance.

The regions of realization of the different phase complexes were defined. Arguments were stated regarding the region of conditions favoring growth of perfect crystals. A qualitative comparison of the calculations with the available experimental results was made.

KUZNETSOV, G.N.

APPROVED FOR RELEASE: 08/09/2001 CIA-RDP86-00513R002201710012-5"

"APPROVED FOR RELEASE: 08/09/2001 CIA-RDP86-00513R002201710012-5

JPRS 57208
6-73

KUZNETSOV, G. N.

II-2. METHOD OF DESCRIPTION AND CALCULATION OF THE THERMODYNAMIC EQUILIBRIUM IN A MULTICOMPONENT SYSTEM WITH CHEMICAL CONVERSION

[Article by Ya. M. Borkhan, G. N. Kuznetsov, V. I. Denisov, Novosibirsk; Novosibirsk, III Simpozium po Protsessam Rosta i Svoystvam Poluprovodnikovykh Kristallov i Plenok, Russian, 12-17 June, 1972, p 12]

An analysis of the mathematical meaning of the De-Donde variables indicates the possibility of introducing new variables in certain relations analogous to the De-Donde variables but having significant advantages when describing the equilibrium in multicomponent systems.

On the basis of using the new variables, a method of calculating the chemical equilibrium is proposed which combines the universality with a relatively high computation speed on a computer. Examples are presented of the thermodynamic calculations of the systems used in the semiconductor layer growth procedures important in practice.

APPROVED FOR RELEASE: 08/09/2001 CIA-RDP86-00513R002201710012-5"

"APPROVED FOR RELEASE: 08/09/2001 CIA-RDP86-00513R002201710012-5

USSR

KUZNETSOV, G. N., and SHCHEKIN, I. Ye., Acoustics Institute of the Academy of Sciences USSR, Moscow

UDC 532.528

"Interaction of Pulsating Bubbles in a Viscous Liquid"

Moscow, Akusticheskiy Zhurnal, Vol 18, No 4, Oct-Dec 72, pp 565-570

Abstract: The problem of interaction of two pulsating bubbles in alternating motion in a viscous liquid is analyzed. From a system of four differential equations, the parameters of radial and alternating motion of bubbles can be determined to within terms of the $(a/l)^3$ and $(b/l)^3$ orders, where a and b are the bubble radii and l is the distance between the bubbles. Analytical expressions for the motion speed of bubbles and their interaction time are derived in first and second approximations by the method of small parameters. Theoretical results of the analysis are compared with experimental parameter values of the motion of bubbles. The application of a derived system of differential equations of radial and alternating motion of two spherical bubbles is discussed on the example of a partial case of interaction of two pulsating bubbles. One illustration, eighteen formulas, thirteen bibliographical references.

1/1

APPROVED FOR RELEASE: 08/09/2001 CIA-RDP86-00513R002201710012-5"

"APPROVED FOR RELEASE: 08/09/2001 CIA-RDP86-00513R002201710012-5

USSR

UDC: 534.29

AGREST, E. M., KUZNETSOV, G. N., Acoustics Institute of the Academy of Sciences of the USSR, Moscow

"Drift of Gas Cavities in a Nonhomogeneous Acoustic Field"

Moscow, Akusticheskiy Zhurnal, Vol 18, No 2, Apr-Jun 72, pp 168-174

Abstract: Gas bubbles pulsate and undergo translational motion under the effect of an external pressure gradient in nonhomogeneous acoustic fields. Equations for rotational and translational motion of bubbles are analyzed simultaneously. The rate of translational motion is numerically and analytically determined as a function of the amplitude and nature of nonhomogeneity of the acoustic field, the radius of a bubble, and the parameters of the liquid. Consideration is given to the influence of translational motion on cavitation resistance, the rate of degasification of the liquid, and the size distribution of bubbles in the cavitation region.

1/1

APPROVED FOR RELEASE: 08/09/2001 CIA-RDP86-00513R002201710012-5"

"APPROVED FOR RELEASE: 08/09/2001 CIA-RDP86-00513R002201710012-5

USSR

Construction

UDC 624.131.43+539.21.094-492.3

KUZNETSOV, G. V., ULYBIN, V. P., SHALAYEV, Yu. I.

"Providing Seismic Protection for Buildings and Equipment on Permafrost During Massive Explosions"

Kolyma, 1972, No. 3, pp 34-36 (from RZh-Mekhanika, No 8, Aug 72, Abstract No 8V536)

Translation: Results of an experimental study of seismic oscillations during explosions conducted under permafrost conditions are presented. A relationship was established between the maximum rate of vibration of the ground and the distance, weight of the charge and the retardation time under group explosions. It is noted that the rate increases with a decrease in the retardation time. The dynamic characteristics of buildings constructed on piles are determined and recommendations are made for determining the seismically safe conditions for conducting explosions. V. N. Kostyuchenko.

1/1

APPROVED FOR RELEASE: 08/09/2001 CIA-RDP86-00513R002201710012-5"

"APPROVED FOR RELEASE: 08/09/2001 CIA-RDP86-00513R002201710012-5

USSR .

UDC 612.122:599.32

SOKOLOV, V. Ye., LEV, B. S., and KUZNETSOV, G. V., Institute of Evolutionary Morphology and Ecology of Animals imeni A. N. Severtsov

"Diurnal Rhythm of the Blood Sugar Level of Some Rodents"

Sverdlovsk, Ekologiya, No 6, 1971, pp 63-68

Abstract: Because of the lack of information on diurnal changes in blood sugar level in wild rodents, and because of contradictions in such information from laboratory experiments, analyses were made every 3 hours during 1 day on 37 field mice (Apodemus agrarius) 113 wood mice (Apodemus sylvaticus), 50 bank voles (Clethrionomys glareolus), and 59 brush voles (Microtus majori) in the summer of 1966 in the Western Caucasus at 700 meters in the forest zone and in the subalpine zone at 1,700 meters, and in Voronezhskiy Game Preserve in the summer of 1967. Blood sugar levels were higher at night than during the day for all mice, but differences were statistically insignificant for field and forest zone wood mice. Two maximums and 2 minimums were recorded for the voles, but differences were statistically insignificant. Fluctuations are small in brush voles at 1,700 meters, probably because of the polyphasic nature of their activity. Higher levels correlated with periods of higher activity in mice, while no such correlation was detected for the voles, probably because of irregularities in technique and polyphasic diurnal

1/2

APPROVED FOR RELEASE: 08/09/2001 CIA-RDP86-00513R002201710012-5"

"APPROVED FOR RELEASE: 08/09/2001 CIA-RDP86-00513R002201710012-5

USSR

SOKOLOV, V. Ye., et al., Ekologiya, No 6, 1971, pp 63-68

activity. Blood sugar levels were higher at higher altitudes and in animals living farther north due to effects of lower temperature and less oxygen on metabolism. Pregnant field mice had higher levels than nonpregnant ones, probably due to increased energy expenditure for gestation. Differences in blood sugar levels between field mice and bank voles were probably minor because of similar dietary specializations and identical metabolic properties, while significant differences in these two attributes correlated with higher levels in brush voles than in bank voles. A study of seasonal changes for bank voles demonstrated the highest levels in fall, followed by decreases in winter, and insignificant increases in the spring, again correlating with metabolic changes. Thus diurnal and seasonal changes in blood sugar level of these rodents are biochemical adaptations that are closely connected with metabolic and activity rhythms.

2/2

APPROVED FOR RELEASE: 08/09/2001 CIA-RDP86-00513R002201710012-5"

"APPROVED FOR RELEASE: 08/09/2001 CIA-RDP86-00513R002201710012-5

USSR

UDC 542.61:546.791

PUSHLENKOV, M. F., KUZNETSOV, G. I., SHCHEPETIL'NIKOV, N. N., POPKOV, G. P., and ZELENIN, L. I.

"Study of the Extraction Rates in Systems Containing Tributyl Phosphate. IV. Extraction of $UO_2(NO_3)_2$ While Mixing it in a Centrifugal Field"

Leningrad, Radiokhimiya, Vol 14, No 2, 1972, pp 235-241

Abstract: A study was carried out on the extraction rate of uranium in the system $UO_2(NO_3)_2$-HNO_3-H_2O-tributyl phosphate-solvent in a centrifugal field. It has been shown that under these conditions the kinetics of mass transfer depends to a great extent on the rotation rate. With a 4000 rpm rate the extraction process is practically completed in 0.8 sec. The effectiveness of the extraction is about 1.3 times greater when carbon tetrachloride is used as a solvent instead of the usual mixture of saturated hydrocarbons boiling in the range 110-270°C. Hydrodynamic properties of the centrifugal extraction apparatus have been studied; formulas were developed for the calculations in layer separation chamber. It has been established that the completeness of phase separation is determined by the velocity of phase flows, rotation rate of the apparatus, and the difference in phase densities.

1/1

APPROVED FOR RELEASE: 08/09/2001 CIA-RDP86-00513R002201710012-5"

"APPROVED FOR RELEASE: 08/09/2001 CIA-RDP86-00513R002201710012-5

USSR UDC 621.317.725:621.385

KUZNETSOV, G. I., Tomsk Special Design Office of Mathematical Machines ~~and Strain~~-Gauge Devices

"A Digital Voltmeter"

Moscow, Otkrytiya, izobreteniya, promyshlennyye obraztsy, tovarnyye znaki, 1970, No 36, Soviet Patent No 288138, class 21, filed 14 Oct 69, published 3 Dec 70, p 81

Translation: This Author's Certificate introduces a digital voltmeter which contains a reference voltage source with discrete divider, a comparison device, storage flip-flops, a synchronizing device with odd and even cadence pulse lines, and pulse-potential coincidence circuits. The coincidence circuits are connected between the set terminals of the storage flip-flops and the cadence pulse lines of the synchronizing device. As a distinguishing feature of the patent, the voltmeter is simplified by connecting the pulse inputs of the coincidence circuits through diode-resistor networks to the one-output terminals of the storage flip-flops, while the potential inputs are connected to the cadence pulse lines, and the outputs of the coincidence circuits are connected through storage capacitors to the set terminals of the storage flip-flops, and through diodes to the common bus.

1/1

APPROVED FOR RELEASE: 08/09/2001 CIA-RDP86-00513R002201710012-5"

"APPROVED FOR RELEASE: 08/09/2001 CIA-RDP86-00513R002201710012-5

AA0044752

UR 0482

Soviet Inventions Illustrated, Section II Electrical, Derwent, 1/70.

238909 ANALOGUE TO DIGITAL CONVERTER. The voltage has been used for the conversion into a code. The triggers of the register are operated by the odd and even synchronisation pulses. A controlled potentiometer under the direct action of the triggers generates a standard compensating voltage which is applied to the comparison circuit. The synchronisation circuit generates odd and even pulses, they are sent on two separate lines and by their appearance an appropriate trigger is turned into state '1'. The coincidence circuit controls which trigger should receive the 'unity' pulse. The converter has been simplified and it works faster because a decoder has been connected between the synchronisation circuit and the registers.

21.6.67 as 1167896/18-24. YU.F.ZHARKOV & G.I.KUZNETSOV. MATHEMATICAL MACHINES SPECIAL DES. OFFICE. (14.8.69) Bul 10/10.3.69. Class 42m5. Int.Cl.G 06j.

1/2

4

19771521

APPROVED FOR RELEASE: 08/09/2001 CIA-RDP86-00513R002201710012-5"

"APPROVED FOR RELEASE: 08/09/2001 CIA-RDP86-00513R002201710012-5

AA0044752

Spetsial'nove Konstruktorskoye Byuro
Matematicheskikh Mashin i
Tenzometricheskikh Priborov

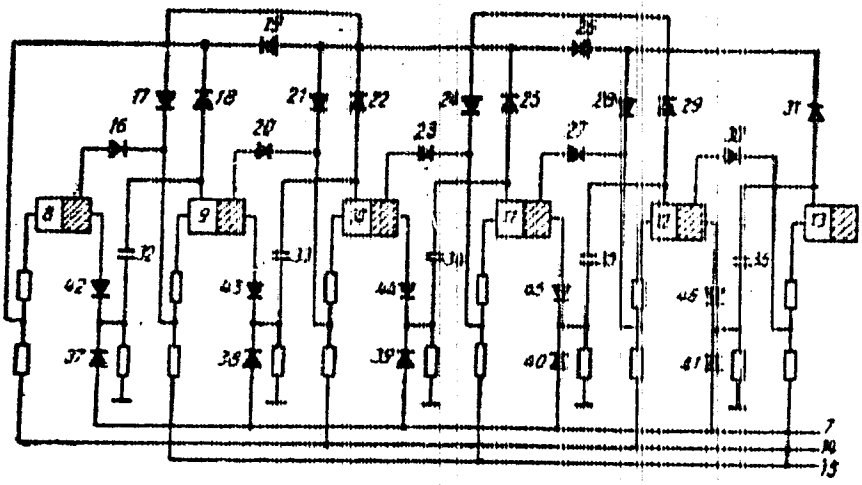

2/2

19771522

APPROVED FOR RELEASE: 08/09/2001 CIA-RDP86-00513R002201710012-5"

"APPROVED FOR RELEASE: 08/09/2001 CIA-RDP86-00513R002201710012-5

1/3 009 UNCLASSIFIED PROCESSING DATE--13NOV70

TITLE--FLOATING BRIDGES ON ICE COVERED RIVERS -U-

AUTHOR-(02)-TERTYSHNIKOV, A., KUZNETSOV, I.

COUNTRY OF INFO--USSR

SOURCE--VOYENNYY VESTNIK, NO 2, 1970, PP 86-89

DATE PUBLISHED--------70

SUBJECT AREAS--MECH., IND., CIVIL AND MARINE ENGR

TOPIC TAGS--PORTABLE FIXED BRIDGE, PONTOON, AMPHIBIOUS BRIDGE/(U)SAT CRAWLER TRACTOR, (U)K61 AMPHIBIOUS FERRY

CONTROL MARKING--NO RESTRICTIONS

DOCUMENT CLASS--UNCLASSIFIED

PROXY REEL/FRAME--3006/0164 STEP NO--UR/0018/70/000/002/0086/0089

CIRC ACCESSION NO--AP0134793

UNCLASSIFIED

APPROVED FOR RELEASE: 08/09/2001 CIA-RDP86-00513R002201710012-5"

"APPROVED FOR RELEASE: 08/09/2001 CIA-RDP86-00513R002201710012-5

2/3 009 UNCLASSIFIED PROCESSING DATE--13NOV70

CIRC ACCESSION NO--AP0133293

ABSTRACT/EXTRACT--(U) GP-0- ABSTRACT. DURING WINTER COMBAT TRAINING, WHEN RIVER ICE IS NOT THICK ENOUGH FOR COMBAT VEHICLES TO DRIVE ACROSS THE ICE, PONTOON SUBUNITS (PODRAZDELENIYA) FREQUENTLY PUT UP FLOATING BRIDGES. THEY HANDLE THIS TYPE OF A JOB USING VARIOUS TECHNIQUES, DEPENDING ON ICE THICKNESS AND STRUCTURE. IF THE ICE IS 30 CM OR MORE THICK AND THERE ARE NO ICE HUMMOCKS ON THE SURFACE, THE BRIDGE IS ASSEMBLED RIGHT ON THE ICE, AFTER WHICH THE CREWS BLAST UPSTREAM AND DOWNSTREAM FROM THE BRIDGE AXIS, AT A MINIMUM SAFE DISTANCE FOR THE PONTOONS. THE BRIDGE IS THEN AFLOAT. IF THE ICE IS LESS THAN 30 CM THICK OR IF THE ICE IS EXTREMELY HUMMOCKY, A CHANNEL NORMALLY 10 TO 12 METERS WIDE AND AT LEAST 18 TO 24 METERS LONG IS PREPARED FROM THE STARTING BANK. THE PONTOON ELEMENTS ARE LOWERED INTO THIS CHANNEL AND LINKED TOGETHER. THE REST OF THE ICE IN THE PATH OF THE BRIDGE IS BLASTED. THE PONTOON ELEMENT BRIDGE IS MOVED TO THE OPPOSITE BANK WITH THE AID OF A BAT ROADWAY LAYER OR TANK TRACTOR. TRUCKS AND S-62 AMPHIBIOUS PERSONNEL CARRIERS ARE MOST OFTEN USED FOR ICE REMOVAL, AND LESS FREQUENTLY BAT ROAD LAYERS. SOMETIMES ICE FREEZES ONTO THE BOTTOM OF THE BRIDGE SECTIONS WHEN THE BRIDGE IS BEING MOVED, CREATING HIGH RESISTANCE AND PROGRESS DELAYS. THE SPEED OF PROGRESS NATURALLY DIMINISHES. OF COURSE IT IS BEST TO ASSEMBLE PONTOON BRIDGES DIRECTLY ON THE ICE, BUT CONDITIONS DO NOT ALWAYS MAKE THIS POSSIBLE. IT IS THEREFORE ESSENTIAL TO PERFECT PONTOONER SKILLS IN BUILDING FLOATING BRIDGES IN ICE CLEARED CHANNELS.

UNCLASSIFIED

APPROVED FOR RELEASE: 08/09/2001 CIA-RDP86-00513R002201710012-5"

"APPROVED FOR RELEASE: 08/09/2001 CIA-RDP86-00513R002201710012-5

3/3 009 UNCLASSIFIED PROCESSING DATE--13NOV70

CIRC ACCESSION NO--AP0135993

ABSTRACT/EXTRACT--IN OUR OPINION THIS TRAINING SHOULD PROCEED TOWARD THE FOLLOWING OBJECTIVES: REDUCTION OF TIME REQUIRED TO CLEAR ICE FROM THE WATER AND SHORE ATTACH THE ANCHORS; REDUCTION OF RESISTANCE TO BRIDGE MOVEMENT, SUCH AS BY BLASTING OR MECHANICAL REMOVAL OF FRACTURED ICE OUT OF THE CLEAR WATER AREA. IN ADDITION, IT IS ESSENTIAL TO PREPARE SNOW CUSHIONS AT LEAST 30 CM THICK FOR OFF LOADING AND OPENING BRIDGE SECTIONS ON THE NEAR SHORE. IMPROVEMENT OF METHODS OF BUILDING PONTOON BRIDGES IN WINTER IS ONE OF OUR PONTOONERS' MOST IMPORTANT TASKS. EFFICIENCY INNOVATORS AMONG THE TROOPS CAN AND SHOULD APPROACH THIS PROBLEM CREATIVELY, DIRECTING THEIR EFFORTS TOWARD ACHIEVING FAST TROOP PASSAGE OVER ICEBOUND RIVERS.

UNCLASSIFIED

APPROVED FOR RELEASE: 08/09/2001 CIA-RDP86-00513R002201710012-5"

"APPROVED FOR RELEASE: 08/09/2001 CIA-RDP86-00513R002201710012-5

Physical Properties

USSR UDC 620.179.14

KUZNETSOV, I. A., BASHKIROV, YU. P., STRELYANOV, V. YE.

"Magnetic, Electric, and Mechanical Properties of 38KhS Steel after Isothermal Quenching in Connection with Developing a Nondestructive Control Technique"

Sverdlovsk, Defektoskopiya, No 1, 1971, pp 96-105

Abstract: Results are presented from a study of the magnetic, electric, and mechanical properties and structure of three 38KhS steel melts as a function of different conditions of isothermal quenching in alkali melts. A study was made of the effect of variation of the chemical composition (within the limits of the type of steel) and the initial structure on the physical properties of the steel. Recommendations are presented for the development and application of nondestructive methods of controlling the structure and mechanical properties.

The indicated properties of the 38KhS steel melts show that there is a significant difference between these properties of the investigated steel both in the initial state and after isothermal quenching. Variation of the chemical composition within the limits of the type of steel has a significant effect on its properties. The results obtained permit establishment of more correct heat treatment conditions characterizing the high operating qualities of the

1/2

APPROVED FOR RELEASE: 08/09/2001 CIA-RDP86-00513R002201710012-5"

"APPROVED FOR RELEASE: 08/09/2001 CIA-RDP86-00513R002201710012-5

USSR

KUZNETSOV, I. A., et al., Defektoskopiya, No 1, 1971, pp 96-105

parts and products made of 38KhS steel. The conclusion is confirmed that in the case of isothermal quenching only in a narrow temperature range of the isothermal medium, it is possible to obtain sufficiently high values of the impact toughness for the given values of the hardness. The time of isothermal holding should be 10 to 20 minutes. The coercive force, the saturation magnetization, and the reluctivity can be used as the magnetic parameters when controlling parts made of 38KhS steel undergoing isothermal quenching.

2/2

APPROVED FOR RELEASE: 08/09/2001 CIA-RDP86-00513R002201710012-5"

"APPROVED FOR RELEASE: 08/09/2001 CIA-RDP86-00513R002201710012-5

Miscellaneous

USSR

UDC 577.4

BULGAKOV, V. A., and KUZNETSOV, I. N.

"Deterministic Multiple Service System"

V sb. Izbr. tr. Vses. mezhvuz. simpoz. po prikl. mat. i kibernet., Gor'kiy, 1967 (Selected Works of the All-Union Inter-VUZ /Higher Educational Institution/ Symposium on Applied Mathematics and Cybernetics, Gor'kiy, 1967 -- Collection of Works), Moscow, "Nauka," 1973, pp 146-150 (from RZh-Matematika, No 6, Jun 73, Abstract No 6V565 from authors' abstract)

Translation: The article considers a deterministic single-server queueing system in which each demand is served a fixed number of times. Questions discussed are those of finding the optimal service order for objects and the moments for starting service for each of them in order for the total service time for all demands to be minimal.

1/1

APPROVED FOR RELEASE: 08/09/2001 CIA-RDP86-00513R002201710012-5"

"APPROVED FOR RELEASE: 08/09/2001 CIA-RDP86-00513R002201710012-5

2. Mathematical Models and the Application of Operations Research

USSR

BULGAKOV, V. A., KUZNETSOV, I. N.

"Deterministic System with Repeated Servicing"

Izbr. Tr. Vses. Mezhvuz. Simpoz. po Prikl. Mat. i Kibernet, Gor'kiy, 1967 [Selected Works of All-Union Interuniversity Symposium on Applied Mathematics and Cybernetics, Gor'kiy, 1967], Moscow, Nauka Press, 1975, pp 146-150 (Translated from Referativnyy Zhurnal Kibernetika, No 6, 1975, Abstract No 6V565, by the authors).

Translation: A deterministic, one-channel queueing system is studied, in which each request is serviced a fixed number of times. Problems of determination of the optimal order of servicing of objects and moments of beginning of servicing of each of them so that the total servicing time of all requests is minimal are discussed.

1/1

APPROVED FOR RELEASE: 08/09/2001 CIA-RDP86-00513R002201710012-5"

"APPROVED FOR RELEASE: 08/09/2001 CIA-RDP86-00513R002201710012-5

KUZNETSOV, I.V.

Health Ed. Center

EXPERIENCE IN PROPAGANDA OF THE "BASES OF PUBLIC HEALTH LEGISLATION IN THE USSR AND UNION REPUBLICS" IN NOVOKUZBYSHEVSK

[article by I.V. Kuznetsov, Novokuzbyshevsk Health Education Center Director, Sovetskoye Zdravookhraneniye, Russian, No 4, 1972, submitted 9 [illegible], pp 8-11]

In the history of Soviet public health, 1969 will go down as the year in which, after extensive discussion of the draft of "Bases of public health legislation in the USSR and Union republics," this document, of utmost importance, was approved by the USSR Supreme Council. This was another manifestation of the concern of the Party and government about the health of the Soviet people, and it revealed inexhaustible opportunities for further improvement in the quality of medical care for the people and on the sanitary and hygienic condition of the environment.

In these Bases, it is written: "Safeguarding the health of the people is the duty of all government bodies, enterprises, institutions, and organizations." In this connection, Party and Soviet bodies, public health institutions, and medical workers are confronted with the task of informing the administrators, trade-union activists, blue and white collar industrial workers and organizations about the requirements contained in the public health legislation.

We should like to share our experience of propagandizing the Bases in Novokuzbyshevsk.

Explanation of this document began already at the time its draft was submitted to national discussion. Broader and more purposeful propaganda about these Bases was continued after they were approved at the 7th Session of the Supreme Council of the USSR. In Novokuzbyshevsk, in accordance with the instructions of the municipal health department, this work was organized by the municipal health education center. Instructive and methodical letters were prepared and sent out which explained the significance of public health legislation, recommended the ways and means of pursuing educational work, literature, and visual aids. To assist physicians and intermediate medical personnel, the Health Education Center prepared and, at a meeting of the health education council, gave approval to the texts of lectures and speeches.

APPROVED FOR RELEASE: 08/09/2001 CIA-RDP86-00513R002201710012-5"

"APPROVED FOR RELEASE: 08/09/2001 CIA-RDP86-00513R002201710012-5

1/2 016 UNCLASSIFIED PROCESSING DATE--27NOV70

TITLE--EFFECT OF ADDITIVES OF TRACE FERTILIZERS ON THE TEMPERATURE OF MODIFICATION TRANSITIONS AND ON THE CRYSTAL LATTICE PARAMETERS OF

AUTHOR-(05)-GANZ, S.N., VARIVODA, I.KH., KUZNETSOV, I.YE., DINKEVICH, I.O., LARINA, L.M.

COUNTRY OF INFO--USSR

SOURCE--ZH. PRIKL. KHIM. (LENINGRAD) 1970, 43(4), 732-5

DATE PUBLISHED--------70

SUBJECT AREAS--AGRICULTURE, CHEMISTRY

TOPIC TAGS--AMMONIUM NITRATE, CRYSTAL LATTICE, TRACE ELEMENT, NITROGEN FERTILIZER

CONTROL MARKING--NO RESTRICTIONS

DOCUMENT CLASS--UNCLASSIFIED

PROXY REEL/FRAME--3001/1627 STEP NO--UR/0080/70/043/004/0732/0735

CIRC ACCESSION NO--AP0127118

UNCLASSIFIED

APPROVED FOR RELEASE: 08/09/2001 CIA-RDP86-00513R002201710012-5"

"APPROVED FOR RELEASE: 08/09/2001 CIA-RDP86-00513R002201710012-5

2/2 016 UNCLASSIFIED PROCESSING DATE--27NOV70

CIRC ACCESSION NO--AP0127118

ABSTRACT/EXTRACT--(U) GP-0- ABSTRACT. THE EFFECT OF CU(NO SUB3)SUB2, MG(NO SUB3)SUB2, ZN(NO SUB3)SUB2, MNSO SUB4, AND NA SUB2 B SUB4 O SUB7 ADMIXTS. (0.3-2PERCENT) ON THE MONOCLINIC ROTHORMORBIC TRANSITION TEMP. OF NH SUB4 NO SUB3 WAS INVESTIGATED. THE GREATEST EFFECT WAS OBSD. FOR 0.5PERCENT ZN(NO SUB3)SUB2, STABILIZING THE ORTHORHOMBIC MODIFICATION AT A TEMP. HIGHER BY SIMILAR TO 5.1DEGREES. THE CRYSTAL LATTICE PARAMETERS WERE DETD. FOR 15 MIXTS. AND FOR PURE NH SUB4 NO SUB3. FACILITY: DNEPROPETROVSK. KHIM. TEKHNOL. INST., DNEPROPETROVSK, USSR.

UNCLASSIFIED

APPROVED FOR RELEASE: 08/09/2001 CIA-RDP86-00513R002201710012-5"

"APPROVED FOR RELEASE: 08/09/2001 CIA-RDP86-00513R002201710012-5

USSR

UDC 669.71.042.6

KUZNETSOV, K. I., GENISARETSKIY, M. A., GOROKHOV, V. P., SKUCHILOV, A. I., SHCHEGLOV, D. A., FIRSOV, V. M., KOZLOV, K. A.

"Development and Assimilation of Continuous Casting of Large Aluminum Ingots"

Tekhnol. Legkikh Splavov. Nauchno-tekhn. Byul. VILSa [The Technology of Light Alloys, Scientific and Technical Bulletin of the All-Union Institute of Light Alloys], 1970, No. 6, pp. 91-93. (Translated from Referativnyy Zhurnal Metallurgiya, No. 5, 1971, Abstract No. 5 G139 by G. Svodtseva).

Translation: The equipment and technology for casting large T-shaped ingots (I) of Al weighing 1 t were developed in 1963-1964 at the SMK (expansion unknown -- possibility: Siberian Metallurgical Combine). In 1969-1970, about 10,000 tons of large I were processed. The use of these I by metallurgical plants to replace the 15-kg I provides for: 1) complete elimination of manual labor in all loading and unloading operations from casting of I at the manufacturer to charging in the melting furnaces of metallurgical plants; 2) reduction in labor consumption by consumers during unloading of I from railroad cars by a factor of 4 by using lift trucks; 3) halving of storage area requirements; 4) reduction in labor consumption involved in transportation of I from railroad car to casting shop by 1.3 times; 5) reduction in labor consumption during charging into furnace by a factor of 2; 6) reduction in requirements for charging boxes by 40%; 7) reduction in melting time by 10-15%; 8) improvement of quality of metal of I

1/2

APPROVED FOR RELEASE: 08/09/2001 CIA-RDP86-00513R002201710012-5"

"APPROVED FOR RELEASE: 08/09/2001 CIA-RDP86-00513R002201710012-5

USSR

UDC 669.71.042.6

KUZNETSOV, K. I., GENISARETSKIY, M. A., GOROKHOV, V. P., SKUCHILOV, A. I., SHCHEGLOV, D. A., FIRSOV, V. M., KOZLOV, K. A., Tekhnol. Legkikh Splavov. Nauchno-tekhn. Byul. VILSa, 1970, No. 6, pp. 91-93.

as a result of decreased gas content and increased metal purity with continuous casting. The ratio of the surface area of large I to volume is 6 times lower than that of 15 kg I as a result of which the charge includes less oxide film, which also improves the quality of the metal.

2/2

APPROVED FOR RELEASE: 08/09/2001 CIA-RDP86-00513R002201710012-5"

"APPROVED FOR RELEASE: 08/09/2001 CIA-RDP86-00513R002201710012-5

USSR

UDC 669.71.018.9.4

LIVANOV, V. A., KUZNETSOV, K. I., and GOROKHOV, V. P.

"Influence of Technological Factors on the Purity of Aluminum Melts"

Tr. Mosk. aviats. tekhnol. in-ta (Works of Moscow Aviation Technological Institute), 1970, vyp. 71, pp 81-88 (from RZh-Metallurgiya, No 12, Dec 70, Abstract No G236 by authors)

Translation: The authors studied the character of the reaction of hydrogen with aluminum oxides during the smelting of alloys under industrial conditions and showed the feasibility of refining aluminum and its alloys to assure the production of high-purity metals. The refining technology consists of letting hydrogenated melts stand in the furnace with the subsequent injection of nitrogen into them in a mixer. Two illustrations.

1/1

APPROVED FOR RELEASE: 08/09/2001 CIA-RDP86-00513R002201710012-5"

"APPROVED FOR RELEASE: 08/09/2001 CIA-RDP86-00513R002201710012-5

USSR

UDC 621.43.011:533;621.5:533

YARYGIN, V. N., KUZNETSOV, L. I.

"Certain Results of a Study of a High-Temperature Underexpanded Jet"

V sb. Fiz. nizkotemperatur. plazmy. Tr. III-Vses. konf. po dinamike razrezh. gazov. VI Sekts. (Physics of Low-Temperature Plasma. Works of the III All-Union Conference on the Dynamics of Rarefied Gases. Section VI -- Collection of Works), Novosibirsk, 1971, pp 25-30 (from RZh-Mekhanika, No 3, Mar 73, Abstract No 3B409)

Translation: The experimental technique and the results of the study of a jet expanding from an electric arc plasmatron into a vacuum are presented. The local mass velocity was measured with a probe selecting a stream of gas for subsequent measurement of the volume over a given time. The distribution of local mass velocity was obtained along the axis of the jet flowing from a sonic nozzle of diameter 6.1 mm. The gas temperature in the prechamber was 3700°K. The distribution of Mach number along the axis of the jet was measured. A cylindrical total pressure transducer was used for this purpose. The results of these measurements were compared with the calculated distribution obtained by the characteristics method. The local gas density was measured by a method

1/2

APPROVED FOR RELEASE: 08/09/2001 CIA-RDP86-00513R002201710012-5"

"APPROVED FOR RELEASE: 08/09/2001 CIA-RDP86-00513R002201710012-5

USSR

YARYGIN, V. N., KUZNETSOV, L. I., Fiz. nizkotemperatur. plazmy. Tr. III-Vses. konf. po dinamike razrezh. gazov. VI Sekts, Novosibirsk, 1971, pp 25-30

based on the use of x-ray bremsstrahlung. A beam of electrons produced by an electron gun intersected the stream and struck a collector. The x-ray photons were recorded with a scintillation counter. The distribution of gas density along the axis of the stream was obtained for two regimes differing in the temperatures of the gas in the prechamber. 7 ref. Yu. F. Dityakin.

2/2

APPROVED FOR RELEASE: 08/09/2001 CIA-RDP86-00513R002201710012-5"

"APPROVED FOR RELEASE: 08/09/2001 CIA-RDP86-00513R002201710012-5

USSR UDC 546-289'21:539.238

SAKHAROV, YU. G., KOROSTELEV, V. F., KUZNETSOV, I. I., CHERNOBROVKIN, D. I., and PUKHA, P. N., Omsk Polytechnical Institute

"Electron Microscope Study of the Structure of GeO Films"

Moscow, Izvestiya Akademii Nauk SSSR -- Neorganicheskiye Materialy, Vol 6, No 10, Oct 70, pp 1821-1823

Abstract: The article considers the effect of specific process regimes on the existence of the amorphous and crystalline states of GeO films, as well as structural changes in GeO as a result of temperature and elevated humidity. An EM-7 electron microscope was used to study the structure of the GeO films. The films were deposited on substrates of sital ST 50-1 at 100 and 200° C. Deposition rate was 5-50 Å/sec. Crystalline inclusions of GeO are observed in the initial deposition stages. Films deposited on different substrates under the same conditions can have different inclusion sizes and shapes, while films deposited on the same substrate under different conditions dis-

1/2

APPROVED FOR RELEASE: 08/09/2001 CIA-RDP86-00513R002201710012-5"

"APPROVED FOR RELEASE: 08/09/2001 CIA-RDP86-00513R002201710012-5

USSR

SAKHAROV, YU. G., et al., Izvestiya Akademii Nauk SSSR -- Neorganicheskiye Materialy, Vol 6, No 10, Oct 70, pp 1821-1823

play the same structure. Two forms of crystalline formations are found, viz. flat tablets and needles. An increase in film thickness intensifies the effect of substrate temperature and deposition rate. Films 1-2 microns thick display the crystal phase at deposition rates of ~ 5 Å/sec, but have an amorphous structure at rates above 20 Å/sec. The size of the crystal formations increases at a substrate temperature of 200° C. Vacuum annealing at 450° C results in the transition of GeO from the amorphous to the crystal phase. The amorphous phase is stable below 350° C. GeO undergoes structural changes in a humid atmosphere.

2/2

APPROVED FOR RELEASE: 08/09/2001 CIA-RDP86-00513R002201710012-5"

"APPROVED FOR RELEASE: 08/09/2001 CIA-RDP86-00513R002201710012-5

K

Kuznetsov, L. K.

AA0040722

UR 0482

70

Soviet Inventions Illustrated, Section I Chemical, Derwent,

242205 STABILITY IMPROVEMENT FOR A FURNACE LINING CONTAINING CARBON is intended to protect the hearth from attack by synthetic slags; coke corundum briquettes are added to the molten slag so that the oxygen chemically bound and dissolved in the slag combines with the carbon in the briquettes. This retards the reaction between the slag and metal and C-containing lining blocks and thus increases the life of the lining.
9.4.68 as 1235409/22-2. KUZNETSOV.L.K.et al.CHELYAB-INSK METALS PLANT. (3.9.69) Bul 15/25.4.69. Class 18b Int.Cl.C 21 c.

20

18

19750366

APPROVED FOR RELEASE: 08/09/2001 CIA-RDP86-00513R002201710012-5"

"APPROVED FOR RELEASE: 08/09/2001 CIA-RDP86-00513R002201710012-5

AA0040722

AUTHORS: Kuznetsov, L. K.; Gerasimchuk, A. P.; Zimurov, I. Yu.; Zhavoronkov, K. P.; and Voinov, S. G.

Chelyabinskiy Metallurgicheskiy Zavod

19750367

APPROVED FOR RELEASE: 08/09/2001 CIA-RDP86-00513R002201710012-5"

"APPROVED FOR RELEASE: 08/09/2001 CIA-RDP86-00513R002201710012-5

USSR

UDC 621.396.677.495

TERESHIN, O. N., KUZNETSOV, I. N., LOSEV, M. L., Active Members of the Scientific and Technical Society of Radio Engineering, Electronics and Communications imeni A. S. Popov

"Wave Channel Type Antenna with Modulated Phase Velocity and Multiple Use of the Array"

Moscow, Radiotekhnika, Vol 27, No 1, 1972, pp 31-35

Abstract: A study was made of the possibility of constructing antennas of the "wave channel" type with modulated phase velocity and multiple utilization of the antenna array. The procedure by which an array is used a multiple number of times to decrease the antenna length previously described by O. N. Tereshin, et al. [Radiotekhnika, Vol 25, No 12, 1970] for double use of the array is extended to the case of quadruple use of the array. Graphs are presented for the relief and impedance functions for two antenna arrays of length 1.2dλ. The figure shows that the relief line of both arrays of the antenna differ little from a straight line. Therefore, when constructing the mockup of the antenna the relief was neglected. This greatly simplified the design of the antenna. The schematic of the experimental mockup of the antenna constructed by the calculated data is presented excited by the procedure commonly used for director

1/2

APPROVED FOR RELEASE: 08/09/2001 CIA-RDP86-00513R002201710012-5"

"APPROVED FOR RELEASE: 08/09/2001 CIA-RDP86-00513R002201710012-5

USSR

TERESHIN, O. N., et al., Radiotekhnika, Vol 27, No 1, 1972, pp 31-35

antennas. Experimental radiation patterns are presented. The analysis demonstrates the possibility of constructing wave channel antennas with modulated phase velocity and quadruple use of the array. The application of such antennas permits a significant decrease in the length of the antenna by comparison with ordinary antennas of the wave channel type.

2/2

APPROVED FOR RELEASE: 08/09/2001 CIA-RDP86-00513R002201710012-5"

"APPROVED FOR RELEASE: 08/09/2001 CIA-RDP86-00513R002201710012-5

USSR UDC: 621.396.677

TERESHIN, O.N., KUZNETSOV, L.N., Active Members of the Scientific and Technical Society of Radio Engineering, Electronics and Communications imeni A.S. Popov

"A Backward-Wave Antenna With Modulated Phase Velocity Based on Rod-Type Decelerating Structures"

Moscow, Radiotekhnika, Vol 25, No 12, Dec 70, pp 39-43

Abstract: The "wave channel" method is used as a basis for formulating the problem of synthesizing a backward-wave antenna with modulated phase velocity. Theoretical and experimental studies show that such an antenna can be constructed with rod-type decelerating structures. The use of backward-wave antennas with modulated phase velocity can appreciably reduce the longitudinal dimensions of antennas as compared with conventional antennas with unmodulated phase velocity. The transverse dimensions of the antennas are increased by the reflecting shield.

1/1

APPROVED FOR RELEASE: 08/09/2001 CIA-RDP86-00513R002201710012-5"

"APPROVED FOR RELEASE: 08/09/2001 CIA-RDP86-00513R002201710012-5

USSR

UDC 621.396.67.001

TERESHIN, O. N., GOFMAN, V. G., KUZNETSOV, L. N.

"Synthesis of a Relief Impedance Axial Radiation Antenna with a Radiation Pattern of Special Shape"

Tr. Mosk. elektrotekhn. in-ta svyazi (Works of the Moscow Electrotechnical Communications Institute), 1970, vyp. 1, pp 130-136 (from RZh-Radiotekhnika, No 9, Sep 70, Abstract No 9B2)

Translation: Beginning with representation of the field near the antenna with a modulated phase velocity in the form of the sum of surface waves with different delays propagated at various angles to the antenna axis (see RZh-Radiotekhnika, 1970, 1B46), a method of synthesis of an antenna with a sectoral radiation pattern is discussed. The parameters of an endon rod impedance antenna and an antenna based on a rod delay structure are calculated. There is one illustration and a three-entry bibliography.

1/1

APPROVED FOR RELEASE: 08/09/2001 CIA-RDP86-00513R002201710012-5"

"APPROVED FOR RELEASE: 08/09/2001 CIA-RDP86-00513R002201710012-5

USSR

UDC 669.187.2

KUZNETSOV, L. K., Candidate of Technical Sciences, TUMIN, N. A., Candidate of Technical Sciences, ZHAVORONKOV, K. P., Engineer, LABUNOVICH, O. A., Engineer, and ZINUROV, I. YU., Engineer

"Working Experience of a 100-ton Electric Furnace with Uprated Transformer and Improved Short Mains"

Moscow, Stal', No 3, Mar 73, pp 236-238

Abstract: Transformers of 29, 15 and 32 Mv-amp uprated nominal power, permitting temporary overloading up to 45 Mv-amp, were installed on two 100-ton electric furnaces at the Chelyabinsk Metallurgical Plant. Modernization of short mains ensured a more uniform power distribution by phases and decreased induction losses. The conditions of melting stainless and structural steels are discussed. For greater effectiveness, further modernization measures must be carried out. One figure, four bibliographic references.

1/1

APPROVED FOR RELEASE: 08/09/2001 CIA-RDP86-00513R002201710012-5"

"APPROVED FOR RELEASE: 08/09/2001 CIA-RDP86-00513R002201710012-5

1

USSR

UDC: 550.834

BRISKIN, S. N., VANDER, S. S., DOLINSKIY, Yu. D., KUZNETSOV, I. Sh., POLYAKOV, K. K., Special Design Office of the Ministry of Geology of the USSR

"Nuclear-Precession Magnetometer"

Moscow, Otkrytiya, Izobreteniya, Promyshlennyye Obraztsy, Tovarnyye Znaki, No 13, May 72, Author's Certificate No 335649, Division G, filed 23 Mar 70, published 11 Apr 72, p 195

Translation: This Author's Certificate introduces: 1. A nuclear-precession magnetometer with digital registration. The instrument contains a magnetically sensitive pickup, coincidence gates, a master frequency oscillator, a count time shaper and a counter. As a distinguishing feature of the patent, the operational reliability of the device is improved by connecting the coincidence gate to the set terminals of the least significant digit counter, and by connecting the input of the least significant digit counter through a second coincidence gate to the count time shaper and to a counter with variable scaling factor, which is connected to the master frequency oscillator and to the most significant digits of a standard frequency period counter which is connected through a third coincidence gate to the standard

1/2

APPROVED FOR RELEASE: 08/09/2001 CIA-RDP86-00513R002201710012-5"

"APPROVED FOR RELEASE: 08/09/2001 CIA-RDP86-00513R002201710012-5

USSR

BRISKIN, S. N. et al., USSR Author's Certificate No 335649

frequency oscillator. A second input of the third coincidence gate is connected through a nuclear precession period counter to the magnetically sensitive pickup. 2. A modification of this magnetometer distinguished by the fact that the counter with variable scaling factor is connected in addition to the least significant digits of the standard frequency period counter.

2/2

APPROVED FOR RELEASE: 08/09/2001 CIA-RDP86-00513R002201710012-5"

"APPROVED FOR RELEASE: 08/09/2001 CIA-RDP86-00513R002201710012-5

K

USSR

BRATASHEVS[illegible], [illegible]
Technical Institute of the Academy of Sciences [illegible]

"EPR on Optically Excited Vacancies of Zinc in Cubic ZnS [illegible]

Moscow, Izvestiya [illegible] Jun 70, p 1171

Abstract: The EPR spectrum observed on irradiated samples [illegible] cubic ZnS with Zn vacancies is analyzed. The samples were [illegible] (a) and in Zn vapor (b). The intensity of the EPR spectrum [illegible] ably lower than that of (a). This indicates an existing [illegible] character of the spectrum and the presence of a Zn vacancy [illegible] data seem to indicate that the Zn vacancy in the EPR spectrum [illegible] photoionized donor at the expense of electrons pertaining to [illegible] sulfur.

1/1

APPROVED FOR RELEASE: 08/09/2001 CIA-RDP86-00513R002201710012-5"

"APPROVED FOR RELEASE: 08/09/2001 CIA-RDP86-00513R002201710012-5

USSR

UDC: 621.385.6

BERBASOV, V. A., GROSHKOV, L. M., KUZNETSOV, M. T., Gor'kiy State University

"Experimental Confirmation of the Existence of a Static Synchronous State of the Electron Cloud in the Preoscillation Mode of a Magnetron"

Gor'kiy, IVUZ Radiofizika, Vol 15, No 6, 1972, pp 944-947

Abstract: The paper presents the results of measurements of electric field strength in the sporadic part of the electron cloud of a magnetron diode in magnetic fields appreciably exceeding critical strength. A comparison of the experimental results with theoretical data shows that the state of the space charge in the sporadic section of the electron cloud in a cylindrical magnetron under preoscillation conditions is close to the static synchronous state.

1/1

APPROVED FOR RELEASE: 08/09/2001 CIA-RDP86-00513R002201710012-5"

"APPROVED FOR RELEASE: 08/09/2001 CIA-RDP86-00513R002201710012-5

TELEVISION

USSR

UDC 621.385.64

KUZNETSOV, M.I., BERBASOV, V.A., ZHELEZTSOVA, I.N. [Gorkiy State University]

"Pre-Oscillation Charge Distribution In A Cylindrical Magnetron"

Izv.VUZ:Radiofizika, Vol XV, No 2, Feb 1972, pp 283-290

Abstract: In previous works one or more of the authors of this paper discussed certain assumptions on the nature of the diffusion electron motion in a plane magnetron. On the basis of these assumptions, a diffusion equation is obtained for the distribution of potential and charge in a cylindrical magnetron diode. A calculation of the pre-oscillation distribution of charge and potential in the irregular part of the electron cloud was fulfilled with the aid of an electronic computer. It is found that at least, at $H \gg 1.5\ H_{cr}$, the major part of the electron cloud is in the regime close to the static synchronous one. 2 fig. 10 ref. Received by editors, 26 Feb 1971.

1/1

APPROVED FOR RELEASE: 08/09/2001 CIA-RDP86-00513R002201710012-5"

"APPROVED FOR RELEASE: 08/09/2001 CIA-RDP86-00513R002201710012-5

USSR

UDC: 621.385.642.2

KUZNETSOV, M. I., BERBASOV, V. A.

"Concerning the Diffusion Theory of the Magnetron Diode"

Moscow, Radiotekhnika i Elektronika, Vol 17, No 4, Apr 72, pp 805-810

Abstract: This paper gives a critical analysis of the diffusion theory of the magnetron diode proposed by U. S. physicists Mouthaan and Skeskind (Phys. Fluids, 1965, 8, 1715; J. Appl. Phys., 1966, 37, 7, 2594). Since its inception, the theory has been developed by various Soviet research workers. It is shown that the results of the theory are not in agreement with the initial assumptions or with experimental data. The authors thank V. S. Lukoshkov for fruitful discussion of the work and constructive criticism, and also D. Ye. Samsonov who took an active part in this discussion.

1/1

APPROVED FOR RELEASE: 08/09/2001 CIA-RDP86-00513R002201710012-5"

"APPROVED FOR RELEASE: 08/09/2001 CIA-RDP86-00513R002201710012-5

USSR

UDC 621.385.64

KUZNETSOV, M. I., BERBASOV, V. A., ZHELEZTSOVA, I. N., Gor'kiy State University

"Pre-oscillation Charge Distribution in a Cylindrical Magnetron"

Gor'kiy, Izvestiya vysshikh uchebnykh zavedeniy, Radiofizika, Vol XV, No 2, 1972, pp 283-290

Abstract: The concepts of the nature of diffusion motion of electrons in a magnetron discussed previously [V. A. Berbasov, Izv. vyssh. uch. zav., Radiofizika, Vol 11, No 9, 1423, 1968; M. I. Kuznetsov, Elektronnaya tekhnika, seriya 1, Elektronika SVCh, No 12, 83, 1970; No 11, 28, 1969] as applied to a flat magnetron were used to obtain the diffusion equation for a cylindrical magnetron. By solving this equation it is shown that at least for $H > 1.5\ H_{cr}$, the majority of the electron cloud is close to static synchronous. The calculations show that the charge and potential distributions depend very little on the parameter C_2 [$C_2 = I\tau_n\omega_H^2 n^2/2\pi\varepsilon_0(e/m)\bar{E}_{r\,n}^2$] in a broad range including the experimental values of $50 < C_2 < 1{,}000$-$2{,}000$.[a] The standard results of calculations of the preoscillation charge and potential distributions in the irregular section of the electron cloud of a magnetron are presented in graphical form and analyzed.

The basic result that the pregeneration state of the space charge in a

1/2

APPROVED FOR RELEASE: 08/09/2001 CIA-RDP86-00513R002201710012-5"

"APPROVED FOR RELEASE: 08/09/2001 CIA-RDP86-00513R002201710012-5

USSR

KUZNETSOV, M. I., et al., Izvestiya vysshikh uchebnykh zavedeniy, Radiofizika, Vol XV, No 2, 1972, pp 283-290

cylindrical magnetron is close to static synchronous is confirmed by sonde measurements in magnetrons with thin cathodes [O. Dochler, Ann. de Radioel., No 3, 27, 1948]. It was recently also confirmed by measurements of the potential distribution in a magnetron with a thick cathode at Gor'kiy State University. The results of these measurements will be published later. The results presented in this paper will be of value in constructing the theory of excitation of a magnetron generator.

2/2

APPROVED FOR RELEASE: 08/09/2001 CIA-RDP86-00513R002201710012-5"

"APPROVED FOR RELEASE: 08/09/2001 CIA-RDP86-00513R002201710012-5

USSR

UDC 621.385.64

KUZNETSOV, M.I.

"To A Diffusive Theory Of A Magnetron Diode (Abstract Of Deposited Manuscript)"

Elektron. tekhnika. Nauchno-tekhn. sb. Elektron. SVCh (Electronic Technology. Scientific-Technical Collection. Microwave Electronics), 1970, Issue 12, pp 83-85 (from RZh--Elektronika i yeye primeneniye, No 4, April 1971, Abstract No 4A156)

Translation: A method is considered for computation of the charge distribution in a magnetron diode in a cutoff regime, where the radial movement of the electrons is principally determined by fluctuation fields. The coefficient of diffusion is determined with the use of a two-dimensional Markov random process. A system of equations is obtained which determines the charge distribution, with experimental data on phase velocity of the fluctuation waves taken into account. The investigations of Mauthkaan and Zyuskind are subjected to criticism and it is shown that the solution of the system of equations obtained by the author is found in conformity with the experimental results of Neddermen [names transliterated from Cyrillic].

1/1

APPROVED FOR RELEASE: 08/09/2001 CIA-RDP86-00513R002201710012-5"

"APPROVED FOR RELEASE: 08/09/2001 CIA-RDP86-00513R002201710012-5

USSR

UDC 621.385.64

KUZNETSOV, M. I.

"On the Mechanism of Fluctuations in a Magnetron Diode"

Kiev, Izvestiya vysshikh uchebnykh zavedeniy -- Radiofizika, Vol 13, No 2, 1970, pp 292-298

Abstract: An experimental examination is conducted of one of the best known hypotheses on the mechanism of fluctuations in a magnetron diode, in which the fluctuations of the current in its interelectrode space are due to fluctuations of the emission current of the cathode amplified by means of one or several known effects -- diocotron amplification, incremental bunching, amplification in accelerated electron streams, amplification in multiray electron stream, etc. It is established that this hypothesis is incorrect. The electron cloud of a magnetron diode is a resonance system and fluctuations in the magnetron diode are natural oscillations of this system which are excited by some kind of noncoherent source. From the experimental data it is obvious that the mechanism of this source

1/2

APPROVED FOR RELEASE: 08/09/2001 CIA-RDP86-00513R002201710012-5"

"APPROVED FOR RELEASE: 08/09/2001 CIA-RDP86-00513R002201710012-5

USSR

KUZNETSOV, M. I., Izvestiya vysshikh uchebnykh zavedeniy -- Radiofizika, Vol 13, No 2, 1970, pp 292-298

Abstract: does not amount to an amplification of the fluctuations of the emission current. Two photographs and a sketch of the experimental magnetron diode constructed for the tests, and a block diagram of the measuring equipment used are presented. 5 figs. 7 ref. Received 20 Dec 68.

2/2

APPROVED FOR RELEASE: 08/09/2001 CIA-RDP86-00513R002201710012-5"

"APPROVED FOR RELEASE: 08/09/2001 CIA-RDP86-00513R002201710012-5

Acc. Nr: AP0047612 Abstracting Service: INTERNAT. AEROSPACE ABST. Ref. Code: UR0141

K

A70-25164 To the mechanism of fluctuations in a magnetron diode (K voprosu o mekhanizme fluktuatsii v magnetronnom diode). M. I. Kuznetsov. *Radiofizika*, vol. 13, no. 2, 1970, p. 292-298. 7 refs. In Russian.

One of the known hypotheses on a mechanism of fluctuations in a magnetron diode is experimentally verified. According to this hypothesis the current fluctuations in its interelectrode space represent the fluctuations of current of the cathode emission which are amplified by one or several known effects—diocotron amplification, increasing bunching, amplification in accelerated electron beams, amplification in multi-velocity electron beams. This hypothesis is found to be incorrect. (Author)

LD

REEL/FRAME
19791178

4

APPROVED FOR RELEASE: 08/09/2001 CIA-RDP86-00513R002201710012-5"

"APPROVED FOR RELEASE: 08/09/2001 CIA-RDP86-00513R002201710012-5

USSR UDC: 8.74

ZAYNASHEV, N. K., KUZNETSOV, M. M.

"Some Problems in Determining the Readiness of Periodically Monitored Technical Devices"

V sb. Osnovn. vopr. teorii i praktiki nadezhnosti (Basic Problems in the Theory and Practice of Reliability--collection of works), Moscow, "Sov. radio", 1971, pp 81-102 (from RZh-Kibernetika, No 1, Jan 72, Abstract no 1V1026)

Translation: Methods are outlined for determining the readiness of periodically monitored recoverable technical devices assuming various properties of the restored elements and causes for failures. It is assumed that elements which have failed may be replaced either by new or old elements, which have been used for a certain length of time. The authors consider the case where failure of the device in the period between checks and during inspections is due to breakdown of various component parts, and the case where the same parts of the device fail both under storage conditions and during inspections.

1/1

APPROVED FOR RELEASE: 08/09/2001 CIA-RDP86-00513R002201710012-5"

"APPROVED FOR RELEASE: 08/09/2001 CIA-RDP86-00513R002201710012-5

AA0043558 KUZNETSOV M.M.

UR 0482

Soviet Inventions Illustrated, Section II Electrical, Derwent,

2/70

243935 DEVICE FOR CHECKING VALVES FOR HERMETIC SEALING contains a housing 1 for creating a vacuum with an elastic packing on which is placed the test valve, corrugated hose 2, a lever mechanism 3, pressure gauge 4 and a flexible hose 5 placed between the ribs of the housing and ring 6 position of which can be adjusted in relation to the stay Between the ribs of the housing and the ring is placed the flexible hose with a short pipe for delivery of the controlling medium i.e. liquid or gas.

19.4.63 as 832033/25-8. M.M.KUZNETSOV & V.F.HREHYUKH (29.11.69) Bul 17/14.5.69. Class 42k, Int.Cl.G 01 1.

18

1/2

19762009

APPROVED FOR RELEASE: 08/09/2001 CIA-RDP86-00513R002201710012-5"

"APPROVED FOR RELEASE: 08/09/2001 CIA-RDP86-00513R002201710012-5

AA0043558

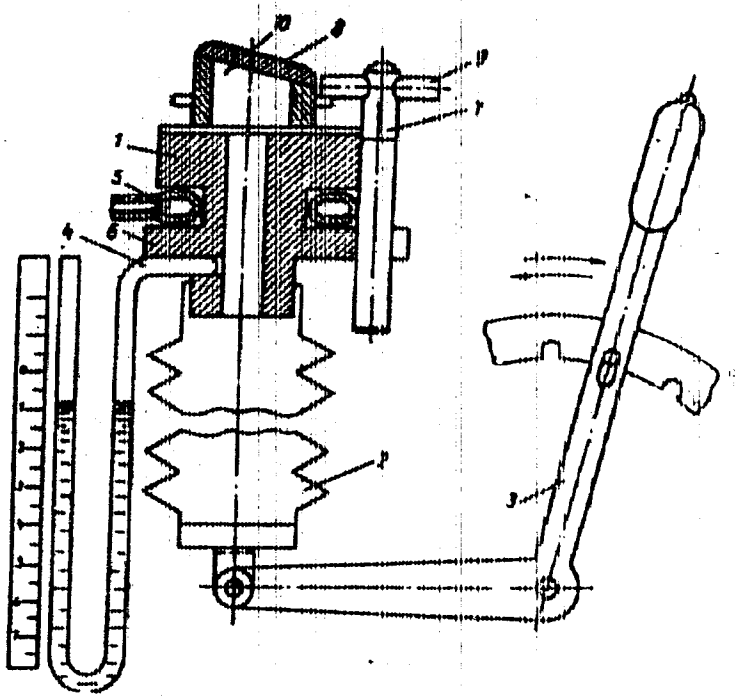

2/2

19762010

28

APPROVED FOR RELEASE: 08/09/2001 CIA-RDP86-00513R002201710012-5"

"APPROVED FOR RELEASE: 08/09/2001 CIA-RDP86-00513R002201710012-5

1/2 031 UNCLASSIFIED PROCESSING DATE--23OCT70

TITLE--ELECTRICAL, PHOTO, AND THERMOELECTRIC PROPERTIES OF THIN FILMS OF ALKALI METAL ANTIMONY SULFIDES AND SELENIDES -U-

AUTHOR-(05)-GNIDASH, N.I., SUKHORUKOVA, L.N., KUZNETSOV, M.S., FINKELSHTYN, YA.G., BERUL, S.I.

COUNTRY OF INFO--USSR

SOURCE--IZV. AKAD. NAUK SSSR, NEORG. MATER. 1970, 6(2), 237-40

DATE PUBLISHED-------70

SUBJECT AREAS--PHYSICS, MATERIALS

TOPIC TAGS--THIN FILM SEMICONDUCTOR, PHOTOCONDUCTIVITY, THERMOELECTRIC PROPERTY, ABSORPTION SPECTRUM, ALKALI METAL COMPOUND, ANTIMONY COMPOUND, SULFIDE, SELENIDE

CONTROL MARKING--NO RESTRICTIONS

DOCUMENT CLASS--UNCLASSIFIED

PROXY REEL/FRAME--1987/1999 STEP NO--UR/0363/70/006/002/0237/0240

CIRC ACCESSION NO--AP0105073

UNCLASSIFIED

APPROVED FOR RELEASE: 08/09/2001 CIA-RDP86-00513R002201710012-5"

"APPROVED FOR RELEASE: 08/09/2001 CIA-RDP86-00513R002201710012-5

2/2 031 UNCLASSIFIED PROCESSING DATE--23OCT70

CIRC ACCESSION NO--AP0105073

ABSTRACT/EXTRACT--(U) GP-0- ABSTRACT. THE ELEC., PHOTOELEC., AND THERMOELEC. PROPERTIES OF THIN FILMS PREPD. BY VACUUM SPUTTERING OF TERNARY COMPDS. OF THE A PRIMEI B PRIMEV C SUB2 PRIMEVI TYPE (WHERE A PRIMEI EQUALS LI, NA, K, OR CS; B PRIMEV EQUALS SB; AND C SUB2 PRIMEVI EQUALS S OR SE) WERE STUDIED. THE TERNARY COMPDS. WERE PREPD. BY INTERACTING SB SUB2 S SUB3(SB SUB2 SE SUB3) WITH THE FLUORIDES OF THE ALKALI METALS. THE FILMS OBTAINED HAVE SEMICONDUCTOR PROPERTIES. A NOTICEABLE PHOTOCOND. IS OBSD. FOR THE ALKALI METAL SB SELENIDES. FOR THE LATTER, SPECTRAL DISTRIBUTION CURVES FOR THE PHOTOCOND. WERE OBTAINED, FROM WHICH IT FOLLOWS THAT THE MAX. OF THE PHOTOCOND. LIE IN THE VISUAL SPECTRAL REGION NEAR THE LONG WAVELENGTH ABSORPTION EDGE OF THESE SUBSTANCES. MANY OF THE THIN FILMS ARE CHARACTERIZED BY A RELATIVELY LARGE DIFFERENTIAL THERMAL EMF. FACILITY: KHAR*KOV. POLITEKH. INST. IM. LENINA, KHARKOV, USSR.

UNCLASSIFIED

APPROVED FOR RELEASE: 08/09/2001 CIA-RDP86-00513R002201710012-5"

"APPROVED FOR RELEASE: 08/09/2001 CIA-RDP86-00513R002201710012-5

Entomology

UDC: 632.934

USSR

VASECHKO, G.I., KUZNETSOV, M.V., SMELYANETS', V.P., GUZNYENKOK, N.KH., Ukrainian Scientific Research Institute of Plant Protection, Institute of Organic Chemistry, Academy of Sciences, Ukrainian SSR

"Insecticidal Properties of Some Components of Essential Oils."

Kiev, Doklady Akademii Nauk Ukrainskoy SSR, Seriya B, No 3, 1970, pp 275-278

Abstract: Essential oils with insecticidal properties are wide spread in the vegetable kingdom. Insecticidal properties of essential oils in wild, five-leaved grapes (which are almost never attacked by insects), conifers, grains and legumes, mint, etc. were determined. Oils were extracted and their active components isolated by chromatography. The LD 50 of oils with respect to insects was determined. Five insecticides were effective against the Colorado beetle, and many insecticides against larvae of Tribolium destructor, among which colamine (ethanolamine), obtained from germinating seeds, is rather effective. A substance synthesized by germinating rye seeds forms the basis for one of the least harmful and most powerful insecticides, fozalon.

APPROVED FOR RELEASE: 08/09/2001 CIA-RDP86-00513R002201710012-5"

"APPROVED FOR RELEASE: 08/09/2001 CIA-RDP86-00513R002201710012-5

1/2 031 UNCLASSIFIED PROCESSING DATE--27NOV70

TITLE--LUMINESCENCE OF ZINC SULFIDE EPITAXIAL FILMS -U-

AUTHOR-(02)-KUZNETSOV, M.V., RAMAZANOV, P.YE.

COUNTRY OF INFO--USSR

SOURCE--IZV. VYSSH. UCHEB. ZAVED., FIZ. 1970, 13(2), 148-50

DATE PUBLISHED-------70

SUBJECT AREAS--PHYSICS, MATERIALS

TOPIC TAGS--LUMINESCENCE, ZINC SULFIDE OPTIC MATERIAL, UV LIGHT, PHOTOLUMINESCENCE, EPITAXIAL GROWTH, POLYCRYSTALLINE FILM

CONTROL MARKING--NO RESTRICTIONS

DOCUMENT CLASS--UNCLASSIFIED

PROXY REEL/FRAME--2000/1256 STEP NO--UR/0138/70/013/002/0148/0150

CIRC ACCESSION NO--AP0124907

UNCLASSIFIED

APPROVED FOR RELEASE: 08/09/2001 CIA-RDP86-00513R002201710012-5"

"APPROVED FOR RELEASE: 08/09/2001 CIA-RDP86-00513R002201710012-5

2/2 031 UNCLASSIFIED PROCESSING DATE--27NOV70

CIRC ACCESSION NO--AP0124907

ABSTRACT/EXTRACT--(U) GP-0- ABSTRACT. THE EPITAXIAL FILM OF ZNS, GROWN ON GAAS AND EXHIBITED WITH UV LIGHT, EXHIBITS A PHOTOLUMINESCENCE WITH AN ORGANE BAND, WITH A MAX. SIMILAR TO 2.02 EV. THE EFFECT OF THE COMPN. (IMPURITIES) OF THE INITIAL ZNS DOES NOT HAVE AN ESSENTIAL EFFECT ON THE PHOTOLUMINESCENT SPECTRUM (BECAUSE OF SELF PURIFICATION). THIS FACT IS NOT YET WELL UNDERSTOOD, BUT IT CAN BE ASSUMED THAT THE ENHANCED ORANGE BAND WITH A MAX. AT 2.02 EV IS RELATED TO THE SELF ALLOYING OF ZNS AND UNDERLYING MATERIALS (GAAS) ABLE TO REDUCE THE LUMINESCENCE OF AN ACTIVATOR SUCH AS CU. THE NATURE OF LUMINESCENT CENTERS, RESPONSIBLE FOR THE BAND OF PHOTOLUMINESCENCE WITH A MAX. AT 2.02 EV IS NOT YET CLEAR, BUT CAN BE ASCRIBED TO THE SPECTRAL DISTRIBUTION OF PHOTO COND. OF THE HETEROTRANSITION ZNS-GAAS, PROBABLY CONNECTED WITH THE CENTERS. THE SPECTRUM OF PHOTOLUMINESCENCE OF THE FILM ZNS-CU HAS BESIDES A MAX. AT 615 MM ANOTHER MAX. IN THE REGION 510-545 NM WHICH PROBABLY DEPENDS ON THE PRESENCE OF CU IN ZNS. FACILITY: SIB. FIZ.-TEKH. INST. IM. KUZNETSOVA, TOMSK, USSR.

UNCLASSIFIED

APPROVED FOR RELEASE: 08/09/2001 CIA-RDP86-00513R002201710012-5"

"APPROVED FOR RELEASE: 08/09/2001 CIA-RDP86-00513R002201710012-5

1/2 021 UNCLASSIFIED PROCESSING DATE--04DEC70

TITLE--WIEDEMANN,FRANZ LAW AND MECHANISM OF SCATTERING OF CURRENT CARRIERS IN N,BISMUTH -U-

AUTHOR-(03)-KUZNETSOV, M.YE., NUZHDABA, V.M., SHALYT, S.S.

COUNTRY OF INFO--USSR

SOURCE--FIZ. TVERD. TELA 1970, 12(4), 1236-9 (RUSS)

DATE PUBLISHED--------70

SUBJECT AREAS--PHYSICS

TOPIC TAGS--SINGLE CRYSTAL, ELASTIC SCATTERING, BISMUTH, TELLURIUM, CRYSTAL LATTICE, ELECTON

CONTROL MARKING--NO RESTRICTIONS

DOCUMENT CLASS--UNCLASSIFIED

PROXY REEL/FRAME--3002/0221 STEP NO--UR/0181/70/012/004/1236/1239

CIRC ACCESSION NO--AP0127832

UNCLASSIFIED

APPROVED FOR RELEASE: 08/09/2001 CIA-RDP86-00513R002201710012-5"

"APPROVED FOR RELEASE: 08/09/2001 CIA-RDP86-00513R002201710012-5

2/2 021 UNCLASSIFIED PROCESSING DATE--04DEC70

CIRC ACCESSION NO--AP0127832

ABSTRACT/EXTRACT--(U) GP-0- ABSTRACT. BY INTRODUCTION OF TE IMPURITY, SINGLE CRYSTALS OF BI WERE OBTAINED WITH MONOPOLAR ELECTRONIC COND. THE ELECTRONIC AND LATTICE COMPONENTS OF THERMAL COND. OF SUCH CRYSTALS WERE DETD. SEP. ANAL. OF THE WIEDEMANN-GRANZ LAW SHOWED THAT SCATTERING OF CURRENT CARRIERS HAS A SMALL BUT MEASURABLE INELASTICITY AT 50-120DEGREESK. AT LOWER TEMP., SCATTERING IS COMPLETELY ELASTIC.

FACILITY: INST. POLUPROV., LENINGRAD, USSR.

UNCLASSIFIED

APPROVED FOR RELEASE: 08/09/2001 CIA-RDP86-00513R002201710012-5"

"APPROVED FOR RELEASE: 08/09/2001 CIA-RDP86-00513R002201710012-5

KUZNETSOV N.D.

Acc. Nr.: AN0104123 Ref. Code: UR9003

TITLE-- ANNOUNCEMENT OF THE COMMITTEE ON LENIN AND STATE PRIZES, U.S.S.R.

NEWSPAPER-- IZVESTIYA, MAY 28, 1970, P 4, COLS 1-5

ABSTRACT-- NINETY ONE BASIC AND APPLIED RESEARCH WORKS HAVE BEEN NOMINATED FOR THE STATE PRIZES. TWO OF THESE, "THE MULTI-PURPOSE INDUSTRIAL HELICOPTER KA-26", BY N. I. KAMOV, V. B. ALEPEROVICH, V. B. BARSHEVSKIY, A. A. DMITRIYEV, G. I. IOFFE, M. A. KUPER, L. A. POTASHNIK, N. N. PRIOROV, A. G. SATAROV, I. M. VEDENEYEV, S. B. BREN, AND V. A. NAZAROV, AND "THE DEVELOPMENT OF TURBOFAN JET ENGINES NK-8 AND NK-8-4, AND THE DEVELOPMENT AND REDUCTION TO SERIAL PRODUCTION A SYSTEM OF TECHNOLOGICAL PROCESSES WHICH ASSURED WIDE USES FOR TITANIUM ALLOYS", BY N. D. KUZNETSOV, M. T. VASILISHIN, V. A. KURGANOV, P. M. MARKIN, V. D. RADCHENKO, P. A. SUKHOV, A. A. MUKHIN, V. G. SHITOV, G. I. MUSHTENKO, L. A. SHKODO, AND G. P. DOLGOLENKO, HAVE BEEN SUBMITTED BY THE MINISTRY OF THE AVIATION INDUSTRY.

112

Reel/Frame 19870555

APPROVED FOR RELEASE: 08/09/2001 CIA-RDP86-00513R002201710012-5"

"APPROVED FOR RELEASE: 08/09/2001 CIA-RDP86-00513R002201710012-5

Acc. Nr.: AN0104123

"A SERIES OF INVESTIGATIONS INTO THE DYNAMICS OF A BODY WITH FLUID-FILLED CAVITIES", /65-68/, BY N. N. MOISEYEV, A. A. PETROV, V. V. RUMYANTSEV AND F. L. CHERNOUS,KO AND "ULTRA HIGH PRECISION JIG BORING MILLS WITH 1,000 X 1,600 AND 1,400 X 2,240 MM PLATENS", BY A. I. KIR,YANOV, V. G. ABRAMOVICH, I. V. GUTKIN, A. S. ALIMENKEV, G. B. PAUKOV, AND A. S. YEGUDKIN, HAVE BEEN SUBMITTED BY THE COMPUTATION CENTER OF THE ACADEMY OF SCIENCES AND THE MINISTRY OF THE MACHINE TOOL CONSTRUCTION AND TOOL INDUSTRY, RESPECTIVELY.

"THE RADICALLY IMPROVED MELTING TECHNOLOGY OF CRITICAL-PURPOSE HIGH-ALLOY STEELS AND ALLOYS OF IMPROVED QUALITY ACHIEVED BY THE INERT GAS TREATMENT OUTSIDE THE FURNACE", BY YU. V. GERASIMOV, O. M. CHEKHOMOV, N. V. SIDOROV, S. K. FILATOV, B. A. CHEREMNYKH, R. M. KHAYRUTDINOV, I. P. BARMOTIN, L. K. KOSYREV, K. P. BAKANOV, N. N. VLASOV, P. I. MELIKHOV, AND N. A. TULIN, HAS BEEN SUBMITTED BY THE ZLATOUST METALLURGICAL PLANT.

2/2 KZ

Reel/Frame
19870556

APPROVED FOR RELEASE: 08/09/2001 CIA-RDP86-00513R002201710012-5"

"APPROVED FOR RELEASE: 08/09/2001 CIA-RDP86-00513R002201710012-5

J-9605

SCIENTIFIC CONFERENCE OF PHYSICIANS
OF THE MOSCOW "ORDER OF LENIN" MILITARY DISTRICT

Colonel, Medical Service, N. M. Kuznetsov

The 10th Scientific Conference of Physicians of the Moscow "Order of Lenin" Military District, devoted to the 10th anniversary of the victory of the Soviet people in the Great Patriotic War, was held in May 1955. Taking part in its work was the deputy chief of the Central Military Medical Directorate of the Soviet Ministry of Defense, the honored physician of the RSFSR, lieutenant-general of the Medical Service, [illegible], scientists of the [illegible] Medical Academy [illegible] Research Institutions of the Soviet Army. In opening the conference, the deputy commander of the armed forces of the district, major-general [illegible] in your opinion [illegible] said, Colonel-General A. V. Sulgin declared that the experience acquired by the medical staff during the years of the Great Patriotic War must now be used for battle-training of the army and of the medical service, so as to take into account the changes which occurred during the postwar years.

Reporting on the subject of "The Great Feat of Arms of the Soviet People" was the deputy chief of the military medical department of the Moscow military district, Col., Medical Service, P. V. Zakharov. He discussed, in detail, the stages of the struggle for liberation of the Soviet people against the German-fascist aggressors. Standing shoulder to shoulder with the fighters of the Red Army, during the hard days of war, were tens of thousands of medical workers. Military physicians, medics, nurses and hygienists made a worthy contribution to the cause of victory over the enemy. In their selfless labor they showed the qualities, respect and affection of our valiant soldiers and officers. The tired as efforts of the medical personnel—both on the front lines as well as in the rear echelons — made it possible to achieve high-quality results in the treatment and return to active duty of our sick and injured warriors.

The honored physician of the RSFSR, doctor of medical sciences, I. D. Arkhangelskiy, reported on the organization of medical care for the troops during the defense of Moscow. He noted here outstanding examples of courage and courage on the part of medical workers. Especially valiant in battle were the units which fought on the banks of the Nara river. Bitter fighting went on there for several days, but our troops withstood the German pressure on the enemy. The medical assistance to the wounded was, at the time, under the able direction of the divisional physician V. A. Tarasov. More than a quarter of a century has passed since, but the farther we are removed by time from that heroic period, the more clearly and we appreciate the grandiose scope of the battle of Moscow, the greatness of the feat of arms performed by the army, and, at the same time, by the workers of its medical service.

Reporting on psycho-hygiene and psychoprophylaxis in the district and on the participation of medical personnel in the moral-psychological training of military personnel, was the honored physician of the RSFSR, major-general of the medical service, I. A. Sinka. He explained that the military medical service, during the postwar years, faced new and important problems as a result of the current technological revolution in the military profession.

KUZNETSOV, N. M. (Col.)

APPROVED FOR RELEASE: 08/09/2001 CIA-RDP86-00513R002201710012-5"

"APPROVED FOR RELEASE: 08/09/2001 CIA-RDP86-00513R002201710012-5

When an individual's general condition deteriorated (as a result of disease or of disruption of the work/rest ratio), instability of the cardiovascular system increased -- and so did the length of the endless tone phenomenon. It could be observed only against the background of a rise in the vascular tonus and an increase in the energy of cardiac activity. In the opinion of the speaker, the data on the phenomenon of endless tone can be used in evaluating the functional condition of the cardiovascular system and of the organism as a whole.

From the various reports delivered at the symposium, it follows that diagnosis of preclinical conditions and evaluation of the state of an organism can only be accomplished on the basis of very complex investigations. A combined effort of clinicians, physiologists, psychologists and hygienists will, also in the future, contribute to the development of new methods and new equipment which will make it possible to determine the working capacity of individuals and to diagnose preclinical conditions which may be present.

Received in June 1970.

APPROVED FOR RELEASE: 08/09/2001 CIA-RDP86-00513R002201710012-5"

"APPROVED FOR RELEASE: 08/09/2001 CIA-RDP86-00513R002201710012-5

KUZNETSOV N.M.

AA0052569

UR 0482

Soviet Inventions Illustrated, Section III Mechanical and General, Derwent, 1-70

243461 CUMULATIVE CHARGES OF EXPLOSIVES are obtained by charging the explosive into an elastic shell, e.g. of polyethylene provided with an inserted body of the corresponding shape and an overall length equal to the length of the above shell, and subsequent sealing and subjecting to the action of compressed air of a liquid under elevated pressure. 6.12.67. as 1201819/40-23. Add to 210724. N.L.ROSINSKII et alia. Safety in the Mining and Metallurgical Ind. Res. Inst. (30.9.69.) Bul.16/5.6.69. Class 78c, Int.Cl.C06b.

19821254

APPROVED FOR RELEASE: 08/09/2001 CIA-RDP86-00513R002201710012-5"

"APPROVED FOR RELEASE: 08/09/2001 CIA-RDP86-00513R002201710012-5

AA0052569

Rosinskiy, N. L.; Matyunin, V. S.; Tolstykh, K. S.;
Morozov, A. M.; Kuznetsov, N. M.
Makeyevskiy Gosudarstvennyy Nauchno-Issledovatel'skiy
Institut po Bezopasnosti Rabot v Gornoy Promyshlennosti

19821255

2/3

APPROVED FOR RELEASE: 08/09/2001 CIA-RDP86-00513R002201710012-5"

"APPROVED FOR RELEASE: 08/09/2001 CIA-RDP86-00513R002201710012-5

1/2 024 UNCLASSIFIED PROCESSING DATE--20NOV70

TITLE--A COMPARATIVE VALUE OF CLINICO RADIOLOGICAL SYMPTOMS OF POSTINFARCTION CARDIAC ANEURYSMS -U-

AUTHOR-(03)-ASTAPOV, B.M., BUGULYUPOV, V.M., KUZNETSOV, R.S.

COUNTRY OF INFO--USSR

SOURCE--KLINICHESKAYA MEDITSINA, 1970, VOL 48, NR 3, PP 42-46

DATE PUBLISHED--------70

SUBJECT AREAS--BIOLOGICAL AND MEDICAL SCIENCES

TOPIC TAGS--HEART DISEASE, ANEURYSM, RADIOGRAPHY, DIAGNOSTIC MEDICINE

CONTROL MARKING--NO RESTRICTIONS

DOCUMENT CLASS--UNCLASSIFIED

PROXY REEL/FRAME--3002/1707 STEP NO--UR/0497/70/048/003/0042/0046

CIRC ACCESSION NO--AP0129077

UNCLASSIFIED

APPROVED FOR RELEASE: 08/09/2001 CIA-RDP86-00513R002201710012-5"