"APPROVED FOR RELEASE: 09/19/2001 CIA-RDP86-00513R002201810006-1

USSR

UDC 621.382.3

GORSKIY, S.YE., LEVITSKIY, K.B.

"Effect Of Thickness And Resistivity Of An Epitaxial Film On The Cutoff Frequency Of Transistors"

V sb. Poluprovodn. pribory i ikh primeneniye (Semiconductor Devices And Their Application--Collection Of Works), Issue 24, Moscow, "Sov.radio," 1970, pp 31-41 (from RZh--Elektronika i yeye primeneniye, No 4, April 1971, Abstract No 43239)

Translation: The paper investigates the effect of the collector current density on the location of the boundaries of the space charge region of the collector junction of epitaxial transistors. It is shown that with specific conditions (narrow base, production by diffusion methods, high-resistance epitaxial film) expansion of the region of the neutral base in the range of its technological boundaries leads to a marked decrease of the critical frequency of the current transmission f_T. 5 ill. 5 ref. Author's abstract.

1/1

APPROVED FOR RELEASE: 09/19/2001 CIA-RDP86-00513R002201810006-1"

"APPROVED FOR RELEASE: 09/19/2001 CIA-RDP86-00513R002201810006-1

3

USSR

UDC 621.382.3

GUSEV, V.M., SHCHIGOL', F.A., NAUMENKO, V.G., LEVITSKIY, K.B., SHCHELCHKOV, B.I., KOZLOV, YU. G., ZAKHAROV, V.I.

"Silicon Planar n-p-nn$^+$ Microwave Transistor Obtained By The Method Of Ion Implantation"

V sb. Radiatsion. fiz. nemet. kristallov (Radiation Physics Of Nonmetal Crystals--Collection Of Works), Minsk, Nauka i tekhn., 1970, pp 155-158 (from RZh--Elektronika i yeye primeneniye, No 1, January 1971, Abstract No 1B221)

Translation: The method of ion implantation in conjunction with planar technology makes it possible to obtain n-p-nn$^+$ microwave transistors with a critical frequency of amplification with respect to the current of f_T = 2 GHz. Specimens were obtained and investigated with a diffusion base and an ion-implantation emitter, and devices in which both the collector and emitter junctions were produced by the method of ion implantation. Basic static and frequency parameters of the devices are presented and also the dependences $V_{ct} = f(I_e)$, $\beta_p = f(I_k)$. 3 ill. 6 ref. Summary.

1/1

APPROVED FOR RELEASE: 09/19/2001 CIA-RDP86-00513R002201810006-1"

"APPROVED FOR RELEASE: 09/19/2001 CIA-RDP86-00513R002201810006-1

USSR

UDC 621.375.018.756

BELEN'KIY, YA. YE., LEVITSKIY, O. V., TISHCHENKO, A. G.

"Analysis of a Pulse Transformer Amplifier"

Otbor i peredacha inform. Resp. mezhved. sb. (Information Sorting and Transmission. Republic Interdepartmental Collection), 1970, vyp. 26, pp 96-101 (from RZh-Radiotekhnika, No 4, Apr 71, Abstract No 4D89)

Translation: A transistorized pulse device connected according to the scheme with a common base with the transformer coupling is analyzed. The possibility of excluding insignificant frequency-dependent parameters of the circuit is investigated in order to construct simplified circuit diagrams of the investigated amplifier for the operating frequency range. A method of series consideration of the frequency-dependent circuit parameters by subdividing the operating frequency range into zones inside which it is possible to neglect certain frequency-dependent parameters is proposed. Simple relations are obtained for the boundary frequencies of the zones, and the frequency zones are constructed by the proposed procedure for a specific amplifier circuit. The bibliography has 7 entries.

1/1

APPROVED FOR RELEASE: 09/19/2001 CIA-RDP86-00513R002201810006-1"

"APPROVED FOR RELEASE: 09/19/2001 CIA-RDP86-00513R002201810006-1

USSR

UDC 621.373.531

BELENKIY, Ya. Ye., LEVITSKIY, O. Ye.

"Multiphase Relaxation Oscillator with Magnetic Couplings"

Otbor i peredacha inform. Resp. mezhved. sb. (Information Sorting and Transmission. Republic Interdepartmental Collection), 1970, vyp. 24, pp 107-111 (from RZh-Radiotekhnika, No 8, Aug 70, Abstract No 8G252)

Translation: The investigated multiphase relaxation oscillator consists of several transistor amplifing cascades with the transformer load included in a ring circuit and connected through a common base resistor. The processes are analyzed in the auto-oscillatory mode. The effect of the circuit and transistor parameters on the pulse length is investigated. The results of experimental testing are presented. The bibliography has seven entries.

1/1

APPROVED FOR RELEASE: 09/19/2001 CIA-RDP86-00513R002201810006-1"

"APPROVED FOR RELEASE: 09/19/2001 CIA-RDP86-00513R002201810006-1

USSR UDC: 621.396.666(088.8)

LEVITSKIY, R. I.

"A Device for Automatic Gain Control"

USSR Author's Certificate No 261471, filed 10 Sep 68, published 22 May 70 (from RZh-Radiotekhnika, No 11, Nov 70, Abstract No 11D106 P)

Translation: This Author's Certificate introduces an AGC device which contains a resonance amplifier, an active voltage divider with a transistor as a variable controlled resistor connected in the signal circuit across the resonance amplifier input, and a diode voltage divider. To increase the gain and extend the working temperature range, a diode voltage divider in the form of two semiconductor diodes connected in series in the conducting direction with a capacitor is connected between the collector of the transistor in the active voltage divider and the common bus. One of the variable component diodes is connected in parallel with the resonance amplifier circuit to change its resonance impedance, while the other is connected in the negative feedback circuit of the resonance amplifier.

1/1

APPROVED FOR RELEASE: 09/19/2001 CIA-RDP86-00513R002201810006-1"

"APPROVED FOR RELEASE: 09/19/2001 CIA-RDP86-00513R002201810006-1

1/2 030 UNCLASSIFIED PROCESSING DATE--27NOV70

TITLE--INFLUENCE OF POLAR STATES OF PROTONS ON THE PHASE TRANSITION IN FERROELECTRICS WITH HYDROGEN BONDING -U-

AUTHOR-(02)-LEVITSKIY, R.R., LITVINOV, V.I.

COUNTRY OF INFO--USSR

SOURCE--UKR. FIZ. ZH. (RUSS. ED.) 1970, 15(3), 170-6

DATE PUBLISHED--------70

SUBJECT AREAS--PHYSICS

TOPIC TAGS--PROTON POLARIZATION, HYDROGEN BONDING, PHASE TRANSITION, FERROELECTRIC CRYSTAL, PHOSPHORIC ACID, POTASSIUM COMPOUND, CRYSTAL IMPURITY, TRANSITION TEMPERATURE

CONTROL MARKING--NO RESTRICTIONS

DOCUMENT CLASS--UNCLASSIFIED

PROXY REEL/FRAME--3007/1055 STEP NO--UR/0185/70/015/003/0470/0476

CIRC ACCESSION NO--AP0136475

UNCLASSIFIED

APPROVED FOR RELEASE: 09/19/2001 CIA-RDP86-00513R002201810006-1"

"APPROVED FOR RELEASE: 09/19/2001 CIA-RDP86-00513R002201810006-1

2/2 030 UNCLASSIFIED

CIRC ACCESSION NO--AP0136475 PROCESSING DATE--27NOV70

ABSTRACT/EXTRACT--(U) GP-0- ABSTRACT. THE EFFECT OF PROTON POLAR EXCITATIONS ("TWINS" AND "HOLES" ON PROTON BONDS) WAS STUDIED ON THE PHASE TRANSITION OF A KH SUB2 PO SUB4 TYPE CRYSTAL. THE CALCN. IS LIMITED TO THE MOL. FILED APPROXN. AN EQUATION WAS OBTAINED FOR THE SPONTANEOUS POLARIZATION AS A FUNCTION OF THE TEMP. BY USING HUBBARD'S METHOD (1964). THE PRESENCE OF IMPURITIES DECREASES THE TRANSITION TEMP. AND THE SPONTANEOUS POLARIZATION.

GOSUNIV., LVOV, USSR. FACILITY: L'VOV.

UNCLASSIFIED

APPROVED FOR RELEASE: 09/19/2001 CIA-RDP86-00513R002201810006-1"

"APPROVED FOR RELEASE: 09/19/2001 CIA-RDP86-00513R002201810006-1

USSR

LEVITSKIY, S. M.; SHAPOVAL, V. Z. (Kiev State University)

"Damping of Oscillations in a Beam-Plasma System during Modulation by a Low-Frequency Signal"

Kiev, Ukrainskiy Fizicheskiy Zhurnal; May, 1972; pp 796-802

ABSTRACT: It is shown experimentally that velocity modulation of an electron beam by a monochromatic signal with a frequency of 10-20 cps results in a one-two-order decrease in integral power of oscillations existing in a beam-plasma system within a frequency range of 10^5-10^{10} cps. In this case energy losses of the beam decrease, and it passes through the plasma almost unscattered. The authors investigate the dependence of oscillation damping on the beam and plasma modes, amplitude and frequency of the modulating signal, and type of gas.

The hypothesis is advanced that the indicated damping effect takes place because of the fact that the parameters of a beam-plasma system suffer perturbation, with a period commensurate with the characteristic time of the build-up of natural oscillations in the system. In this case the conditions for the build-up of oscillations are disturbed and their level decreases.

1/1

APPROVED FOR RELEASE: 09/19/2001 CIA-RDP86-00513R002201810006-1"

"APPROVED FOR RELEASE: 09/19/2001 CIA-RDP86-00513R002201810006-1

1/2 020 UNCLASSIFIED PROCESSING DATE--20NOV70

TITLE--SOLUTION OF DISPERSION EQUATION FOR PLASMA BEAM SYSTEMS WITH ALLOWANCE FOR COLLISIONS OF ELECTRONS -U-

AUTHOR-(03)-BARANCHUK, N.S., KOTSARENKO, N.YA., LEVITSKIY, S.M.

COUNTRY OF INFO--USSR

SOURCE--ZHURNAL TEKHNICHESKOI FIZIKI, VOL. 40, APR. 1970, P. 733-739

DATE PUBLISHED--------70

SUBJECT AREAS--PHYSICS

TOPIC TAGS--DISPERSION EQUATION, PLASMA BEAM, ELECTRON COLLISION

CONTROL MARKING--NO RESTRICTIONS

DOCUMENT CLASS--UNCLASSIFIED

PROXY REEL/FRAME--2000/1321 STEP NO--UR/0057/70/040/000/0733/0739

CIRC ACCESSION NO--AP0124972

UNCLASSIFIED

APPROVED FOR RELEASE: 09/19/2001 CIA-RDP86-00513R002201810006-1"

"APPROVED FOR RELEASE: 09/19/2001 CIA-RDP86-00513R002201810006-1

2/2 020 UNCLASSIFIED PROCESSING DATE--20NOV70

CIRC ACCESSION NO--AP0124972

ABSTRACT/EXTRACT--(U) GP-0- ABSTRACT. ANALYTICAL SOLUTION OF THE DISPERSION EQUATION FOR THE PLASMA BEAM SYSTEM WITH ALLOWANCE FOR COLLISIONS OF PLASMA ELECTRONS WITH HEAVY PARTICLES. EXPRESSIONS ARE DERIVED FOR COMPLEX COEFFICIENTS CONCERNING THE PROPAGATION OF PLASMA WAVEGUIDE AND BEAM WAVES IN THE NEIGHBORHOOD OF THE SYNCHRONISM. UNDER REGIMES WHICH ARE OFF SYNCHRONISM, THE POSSIBILITY OF A RESISTANCE AMPLIFICATION IS INDICATED. FOR REGIMES FOR WHICH THE WEAK BEAM APPROXIMATION WAS NOT VALID, THE DISPERSION EQUATION WAS SOLVED BY MEANS OF A DIGITAL COMPUTER. FACILITY: KIEVSKII GOSUDARSTVENNYI UNIVERSITET, KIEV, UKRAINIAN SSR.

UNCLASSIFIED

APPROVED FOR RELEASE: 09/19/2001 CIA-RDP86-00513R002201810006-1"

"APPROVED FOR RELEASE: 09/19/2001 CIA-RDP86-00513R002201810006-1

1/2 049 UNCLASSIFIED PROCESSING DATE--27NOV70

TITLE--AMPLIFICATION OF MICROWAVE OSCILLATIONS IN AN ARC DISCHARGE WITH A HOT CATHODE -U-

AUTHOR-(02)-LEVITSKIY, S.M., FILONENKO, YE.G.

COUNTRY OF INFO--USSR

SOURCE--UKR. FIZ. ZH.; 15: 269-73, FEB 1970

DATE PUBLISHED----FEB70

SUBJECT AREAS--PHYSICS, ELECTRONICS AND ELECTRICAL ENGR.

TOPIC TAGS--MICROWAVE, OSCILLATION, ARC DISCHARGE, CATHODE, FREQUENCY CHARACTERISTIC, PLASMA WAVE

CONTROL MARKING--NO RESTRICTIONS

DOCUMENT CLASS--UNCLASSIFIED

PROXY REEL/FRAME--3002/0224 STEP NO--UR/0185/70/015/000/0269/0273

CIRC ACCESSION NO--AP0127835

UNCLASSIFIED

APPROVED FOR RELEASE: 09/19/2001 CIA-RDP86-00513R002201810006-1"

"APPROVED FOR RELEASE: 09/19/2001 CIA-RDP86-00513R002201810006-1

2/2 049 UNCLASSIFIED PROCESSING DATE--27NOV70

CIRC ACCESSION NO--AP0127835

ABSTRACT/EXTRACT--(U) GP-0- ABSTRACT. AMPLIFICATION OF THE MICROWAVE OSCILLATIONS WAS STUDIED IN AN ARC DISCHARGE WITH A HOT CATHODE. IT WAS FOUND THAT THE REAL AMPLIFICATION WAS 20 TO 25 DB. THE FREQUENCY CHARACTERISTIC OF THE AMPLIFICATION CONSISTS OF SOME DISCRETE BANDS WITH A WIDTH OF ABOUT 10 MHZ IN THE RANGE FROM 50 TO 200 MHZ. A LINEAR DEPENDENCE WAS OBSERVED BETWEEN THE OUTPUT AND INPUT POWERS, BUT WHEN THE INPUT POWER HAS A LARGE VALUE, NONLINEAR EFFECTS COUNTED. ON THE BASIS OF MEASURING DISPERSION CHARACTERISTICS OF THE PLASMA WAVES, IT IS CONCLUDED THAT GENERATION AND AMPLIFICATION ARE STIMULATED BY A SYNCHRONOUS INTERACTION OF THE PLASMA WAVES WITH THE ELECTRON STREAM ACCELERATED IN THE RANGE OF THE POTENTIAL CATHODE DROP.

FACILITY: KIEV STATE UNIV.

UNCLASSIFIED

APPROVED FOR RELEASE: 09/19/2001 CIA-RDP86-00513R002201810006-1"

"APPROVED FOR RELEASE: 09/19/2001 CIA-RDP86-00513R002201810006-1

USSR

UDC 621.792.92.669.018.25:620.178.16

LEVITSKIY, S. N., Candidate of Technical Sciences, KASUMZADE, N. G., Doctor of Technical Sciences, Professor

"Wear Resistance of Surfacing Alloys in Hydroabrasive Wear"

Vestnik Mashinostroyeniya, No 2, Feb. 1973, pp 32-34.

Abstract: Results are presented from studies of wear resistance of a group of widely used surfacing materials and new alloys in the C-B-Fe and C-W-Fe alloy systems. Wear-resistant surfacing materials are found which effectively increase the durability of oil field equipment parts. The most effective alloys are U13R12S2G3 (1.3% C, 2.2% Si, 3.2% Mn, 12.5% B) and U20V35 (1.9% C, 0.8% Si, 0.6% Mn, 32% W).

1/1

APPROVED FOR RELEASE: 09/19/2001 CIA-RDP86-00513R002201810006-1"

"APPROVED FOR RELEASE: 09/19/2001 CIA-RDP86-00513R002201810006-1

1/2 019 UNCLASSIFIED PROCESSING DATE--27NOV70

TITLE--THERMODYNAMIC PROPERTIES OF BINARY OXIDE SYSTEMS AT HIGH TEMPERATURES. II. DETERMINATION OF GIBBS FREE ENERGIES OF FETO SUB3

AUTHOR-(03)-LEVITSKIY, V.A., POPOV, S.G., RATIANI, D.D.

COUNTRY OF INFO--USSR

SOURCE--ZH. FEZ. KHIM. 1970, 44(5), 1337-8

DATE PUBLISHED--------70

SUBJECT AREAS--CHEMISTRY

TOPIC TAGS--FREE ENERGY, ELECTRODE POTENTIAL, ELECTROLYTIC CELL, TITANIUM OXIDE, TITANATE, IRON COMPOUND, IRON OXIDE, ELECTROCHEMICAL ANALYSIS

CONTROL MARKING--NO RESTRICTIONS

DOCUMENT CLASS--UNCLASSIFIED

PROXY REEL/FRAME--3006/1410 STEP NO--UR/0076/70/044/005/1337/1338

CIRC ACCESSION NO--AP0135094

UNCLASSIFIED

APPROVED FOR RELEASE: 09/19/2001 CIA-RDP86-00513R002201810006-1"

"APPROVED FOR RELEASE: 09/19/2001 CIA-RDP86-00513R002201810006-1

2/2 019 UNCLASSIFIED PROCESSING DATE--27NOV70

CIRC ACCESSION NO--AP0135084

ABSTRACT/EXTRACT--(U) GP-0- ABSTRACT. THE EMF. OF THE CELL PT-FE, TIO SUB2, FETIO SUB3-G PRIME2NEGATIVE(FE SUB0.950, FE-PT WAS MEASURED TO DET. THE FREE ENERGY OF FORMATION OF FETIO SUB3 FROM OXIDES AT HIGH TEMPS. DELTAG (CAL) EQUALS MINUS 7320 PLUS 2182TAU. FACILITY: MOSK. GOS. UNIV. IM. LOMONOSOVA, MOSCOW, USSR.

UNCLASSIFIED

APPROVED FOR RELEASE: 09/19/2001 CIA-RDP86-00513R002201810006-1"

"APPROVED FOR RELEASE: 09/19/2001 CIA-RDP86-00513R002201810006-1

LEVITSKIY

AA0052663

UR 0482

Soviet Inventions Illustrated, Section III Mechanical and General, Derwent, 2-70

244184 TIMBER ROLLING MECHANISM comprises a chassis and a grab with a compound pulley for covering the grab. There are also log grabs for tractors and hoists which are used for rolling timber into water. In order to retain efficiently the bundles of timber during the movement of the mechanism over uneven surfaces, the movable blocks (4) of the pulley system are fixed in the lower jaw (2) of the grab, whilst the end of the rod of the pulley system is fixed on the upper jaw (3) of the grab which is connected to the chassis by a rod (8) regulated according to length. By means of the compound pulleye of the grab the bundle of timber is compressed by the jaws of the mechanism and is retained by them during transportation. The mechanism can be coupled to any hauling tractor.

29.12.67. as 1206439/29-33, LESHKEVICH, A.I. et al. Timber Ind. Mech. & Energetics Res. & Design Inst. (8.10.69) Bul. 17/14.5.69. Class 81e, Int. Cl. B 65g.

1/2

18

19821411

APPROVED FOR RELEASE: 09/19/2001 CIA-RDP86-00513R002201810006-1"

"APPROVED FOR RELEASE: 09/19/2001 CIA-RDP86-00513R002201810006-1

AA0052663

Leshkevich, A.I.; Levitskiy, Ya.Ye.; Reutov, Yu.M.; Baurin, I.P.; Korolev, V.Ye.; Tsentral'nyy Nauchno-Issledovatel'skiy i Proyektno-Konstruktorskiy Institut Mekhanizatsiy i Energetiki Lesnoy Pronyshlennosti

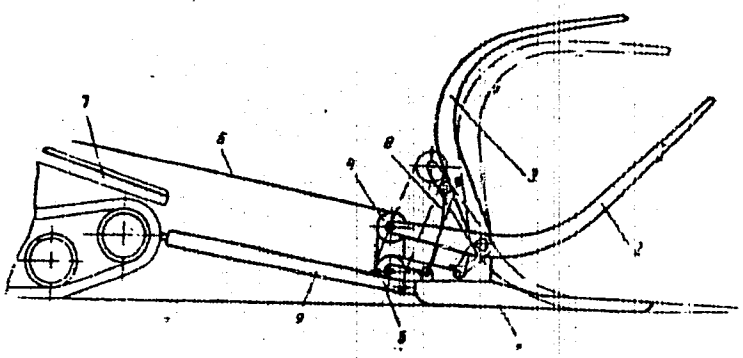

19821412

2/2

APPROVED FOR RELEASE: 09/19/2001 CIA-RDP86-00513R002201810006-1"

"APPROVED FOR RELEASE: 09/19/2001 CIA-RDP86-00513R002201810006-1

UDC: 51

USSR

BAGRINOVSKIY, K. A., LEVITSKIY, Ye. M., MEN'SHIKOV, S. M.

"Intersectoral Dynamic Models of the United States Economy"

V sb. Probl. postroyeniya i ispol'z. narodnokhoz. modeley (Problems of Constructing and Utilizing National Economic Models--collection of works), Novosibirsk, 1971, pp 3-141 (from RZh-Kibernetika, No 5, May 72, Abstract No 5V435)

[No abstract]

1/1

APPROVED FOR RELEASE: 09/19/2001 CIA-RDP86-00513R002201810006-1"

"APPROVED FOR RELEASE: 09/19/2001 CIA-RDP86-00513R002201810006-1

USSR UDC 539.4

LEVINSKIY, YU. V., TREFILOV, B. F., and DOVYCHENKOVA, L. V., Moscow, All-Union Scientific Research Institute of Aviation Materials

"Brittleness of Coated Tungsten Wire"

Kiev, Problemy Prochnosti, No 6, 1973, pp 57-59

Abstract: The effect of the nature and thickness of specially grown brittle layers on tungsten wire was examined along with their behavior during fracture. The brittle layers were formed by recrystallization or carbonization. A mechanism of brittle fracture of a ductile material is proposed during the transition from a brittle coating to a crack. It is shown that the nature of fracture depends on the plastic properties and thickness of the coating. The produced experimental data correspond qualitatively with the proposed fracture mechanism. Three figures, seven bibliographic references.

1/1

APPROVED FOR RELEASE: 09/19/2001 CIA-RDP86-00513R002201810006-1"

"APPROVED FOR RELEASE: 09/19/2001 CIA-RDP86-00513R002201810006-1

USSR

Coatings

UDC 620.18:669.71

PORTNOY, K. I., LEVINSKIY, YU. V., SALIBEKOV, S. YE., DVOYCHENKOVA, L. V., and TREFILOV, B. F., Moscow

"Using the Titanium Nitride as a Diffusion Barrier in Nickel-Base Composite Materials"

Moscow, Fizika i Khimiya Obrabotki Materialov, No 3, May/Jun 73, pp 122-126

Abstract: The aim of this work was to design a commercial unit for the continuous coating of tungsten and molybdenum wire with titanium nitride and to study the behavior of these wires in a nickel matrix. The unit employs a mixture of hydrogen and nitrogen which passes into the reaction vessel and is mixed with titanium chloride. Tungsten (molybdenum) wire is drawn through the reaction vessel while heated by an electric current passing through it. The titanium tetrachloride undergoes reduction on a heated wire surface, with a simultaneous formation of titanium nitride. The optimal coating temperature was 1100°C, with a deposition rate of 0.5 μ/sec. This method makes it possible to produce coatings 3-6 μ thick on wires 300 and 310 μ thick. Titanium nitride coatings of this thickness almost completely stopped the penetration of tungsten into nickel at 1200°C and molybdenum into nickel at 1100°C durin a 100-hr exposure. The strength of tungsten and molybdenum wire with titanium nitride coatings after annealing in a nickel matrix at 1000-1200°C for 1, 10, 100 hours was considerably higher that of a similar wire without the coating.

1/1

APPROVED FOR RELEASE: 09/19/2001 CIA-RDP86-00513R002201810006-1"

"APPROVED FOR RELEASE: 09/19/2001 CIA-RDP86-00513R002201810006-1

1/2 017 UNCLASSIFIED PROCESSING DATE--13NOV70

TITLE--BIOSYNTHESIS OF PENICILLIN IN FERMENTING DEVICES OF VARYING CAPACITIES -U-

AUTHOR-(04)-LEVITVO, M.M., LYRYE, L.M., ZAVILEYSKAYA, G.F., SOYFER, R.D.

COUNTRY OF INFO--USSR

SOURCE--KHIM.-FARM. ZH. 1970, 4(3), 41-5

DATE PUBLISHED--------70

SUBJECT AREAS--BIOLOGICAL AND MEDICAL SCIENCES

TOPIC TAGS--BIOSYNTHESIS, PENICILLIN, FERMENTATION

CONTROL MARKING--NO RESTRICTIONS

DOCUMENT CLASS--UNCLASSIFIED

PROXY REEL/FRAME--3001/0517 STEP NO--UR/0450/70/004/003/0041/0045

CIRC ACCESSION NO--AP0126265

UNCLASSIFIED

APPROVED FOR RELEASE: 09/19/2001 CIA-RDP86-00513R002201810006-1"

"APPROVED FOR RELEASE: 09/19/2001 CIA-RDP86-00513R002201810006-1

2/2 017 UNCLASSIFIED PROCESSING DATE--13NOV70

CIRC ACCESSION NO--AP0126265

ABSTRACT/EXTRACT--(U) GP-0- ABSTRACT. THE AMT. OF BIOSYNTHESIS OF PENICILLIN WAS SIMILAR IN THE FERMENTERS OF ACPACITIES 3000,20,000, AND 50,000 L., BUT IN THE FERMENTERS OF CAPACITY 100 L. BIOSYNTHESIS OF THE ANTIBIOTIC WAS 30PERCENT LOWER. FACILITY: VSES, NAUCH.-ISSLED. INST. ANTIBIOT., MOSCOW, USSR.

UNCLASSIFIED

APPROVED FOR RELEASE: 09/19/2001 CIA-RDP86-00513R002201810006-1"

"APPROVED FOR RELEASE: 09/19/2001 CIA-RDP86-00513R002201810006-1

USSR

LINEVA, V. A., PRESHIVORA, M., LEVIYEV, P. YA., [illegible] CADEMIZALOV, D., SAPINA, M. M., SAGATELOVA, I. S., and [illegible] L. F.

"Trails of the Czechoslovak Insecticide ES-50 Metathion in the USSR. I. ES-50 Metathion Used to Control the Housefly"

Moscow, Meditsinskaya Parazitologiya i Parazitarnyye Bolezni, No 2, 1970, pp 211-220

Abstract: ES-50 metathion, an organophosphorus compound derived from pentnitrothion O, O-dimethyl (O-3-methyl-4-nitrophenyl) thiophosphate, was developed and tested in Czechoslovakia where it demonstrated a broad spectrum of action against flies, cockroaches, ticks, and crop pests. It has low toxicity for warm-blooded animals and no cumulative effect. Laboratory and field tests of the insecticide in five different climatic regions of the Soviet Union showed that it is highly effective in a dose of 2 g/m² of treated surface for 30-60 days. The temperature and humidity are the most important factors in the action of metathion. The higher the temperature and

1/2

APPROVED FOR RELEASE: 09/19/2001 CIA-RDP86-00513R002201810006-1"

"APPROVED FOR RELEASE: 09/19/2001 CIA-RDP86-00513R002201810006-1

UDC 621.792.92.669.018.25:620.178.16

USSR

LEVITSKIY, S. N., Candidate of Technical Sciences, KASUMZADE, N. G., Doctor of Technical Sciences, Professor

"Wear Resistance of Surfacing Alloys in Hydroabrasive Wear"

Vestnik Mashinostroyeniya, No 2, Feb. 1973, pp 32-34.

Abstract: Results are presented from studies of wear resistance of a group of widely used surfacing materials and new alloys in the C-B-Fe and C-W-Fe alloy systems. Wear-resistant surfacing materials are found which effectively increase the durability of oil field equipment parts. The most effective alloys are U13R12S2G3 (1.3% C, 2.2% Si, 3.2% Mn, 12.5% B) and U20V35 (1.9% C, 0.8% Si, 0.6% Mn, 32% W).

APPROVED FOR RELEASE: 09/19/2001 CIA-RDP86-00513R002201810006-1"

"APPROVED FOR RELEASE: 09/19/2001 CIA-RDP86-00513R002201810006-1

1/2 019 UNCLASSIFIED PROCESSING DATE--27NOV70

TITLE--THERMODYNAMIC PROPERTIES OF BINARY OXIDE SYSTEMS AT HIGH TEMPERATURES. II. DETERMINATION OF GIBBS FREE ENERGIES OF FETO SUB3

AUTHOR-(03)-LEVITSKIY, V.A., POPOV, S.G., RATIANI, D.D.

COUNTRY OF INFO--USSR

SOURCE--ZH. FEZ. KHIM. 1970, 44(5), 1337-8

DATE PUBLISHED--------70

SUBJECT AREAS--CHEMISTRY

TOPIC TAGS--FREE ENERGY, ELECTRODE POTENTIAL, ELECTROLYTIC CELL, TITANIUM OXIDE, TITANATE, IRON COMPOUND, IRON OXIDE, ELECTROCHEMICAL ANALYSIS

CONTROL MARKING--NO RESTRICTIONS

DOCUMENT CLASS--UNCLASSIFIED

PROXY REEL/FRAME--3006/1410 STEP NO--UR/0076/70/044/005/1337/1338

CIRC ACCESSION NO--AP0135084

UNCLASSIFIED

APPROVED FOR RELEASE: 09/19/2001 CIA-RDP86-00513R002201810006-1"

"APPROVED FOR RELEASE: 09/19/2001 CIA-RDP86-00513R002201810006-1

UNCLASSIFIED PROCESSING DATE--27NOV70

2/2 019

CIRC ACCESSION NO--AP0135084

ABSTRACT/EXTRACT--(U) GP-0- ABSTRACT. THE EMF. OF THE CELL PT-FE, TIO SUB2, FETIO SUB3-O PRIME2NEGATIVE(FE SUB0.950, FE-PT WAS MEASURED TO DET. THE FREE ENERGY OF FORMATION OF FETIO SUB3 FROM OXIDES AT HIGH TEMPS. DELTAG (CAL) EQUALS MINUS 7320 PLUS 2182TAU. FACILITY: MOSK. GOS. UNIV. IM. LOMONOSOVA, MOSCOW, USSR.

UNCLASSIFIED

APPROVED FOR RELEASE: 09/19/2001 CIA-RDP86-00513R002201810006-1"

"APPROVED FOR RELEASE: 09/19/2001 CIA-RDP86-00513R002201810006-1

LEVITSKIY

UR 0482

AA0052663

Soviet Inventions Illustrated, Section III Mechanical and General,
Derwent, 3-76

244184 TIMBER ROLLING MECHANISM comprises a chassis and a grab with a compound pulley for covering the grab. There are also log grabs for tractors and hoists which are used for rolling timber into water. In order to retain efficiently the bundles of timber during the movement of the mechanism over uneven surfaces, the movable blocks (4) of the pulley system are fixed in the lower jaw (2) of the grab, whilst the end of the rod of the pulley system is fixed on the upper jaw (3) of the grab which is connected to the chassis by a rod (8) regulated according to length. By means of the compound pulleys of the grab the bundle of timber is compressed by the jaws of the mechanism and is retained by them during transportation. The mechanism can be coupled to any hauling tractor.

29.12.67. as 1206439/29-33, LESHKEVICH, A.I. et al. Timber Ind. Mech. & Energetics Res. & Design Inst. (8.10.69) Bul. 17/14.5.69. Class 81a, Int. Cl.

18

APPROVED FOR RELEASE: 09/19/2001 CIA-RDP86-00513R002201810006-1"

"APPROVED FOR RELEASE: 09/19/2001 CIA-RDP86-00513R002201810006-1

AA0052663

Leshkevich, A.I.; Levitskiy, Ya.Ye.; Reutov, Yu.M.; Baurin, I.P.; Korolev, V.Ye.; Tsentral'nyy Nauchno-Issledovatel'skiy i Proyektno-Konstruktorskiy Institut Mekhanizatsiy i Energetiki Lesnoy Promyshlennosti

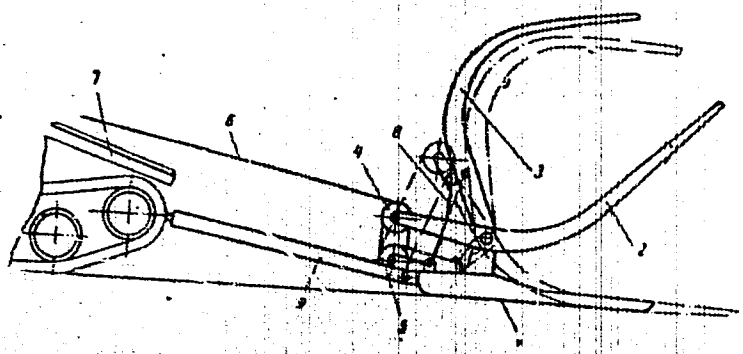

2/2

19821412

APPROVED FOR RELEASE: 09/19/2001 CIA-RDP86-00513R002201810006-1"

"APPROVED FOR RELEASE: 09/19/2001 CIA-RDP86-00513R002201810006-1

UDC: 51

USSR

BAGRINOVSKIY, K. A.; LEVITSKIY, Ye. M., MEN'SHIKOV, S. M.

"Intersectoral Dynamic Models of the United States Economy"

V sb. Probl. postroyeniya i ispol'z. narodnokhoz. modeley (Problems of Constructing and Utilizing National Economic Models--collection of works), Novosibirsk, 1971, pp 3-141 (from RZh-Kibernetika, No 5, May 72, Abstract No 5V435)

[No abstract]

1/1

APPROVED FOR RELEASE: 09/19/2001 CIA-RDP86-00513R002201810006-1"

"APPROVED FOR RELEASE: 09/19/2001 CIA-RDP86-00513R002201810006-1

UDC 539.4

USSR

LEVINSKIY, YU. V., TREFILOV, B. F., and DOVYCHENKOVA, L. V., Moscow, All-Union Scientific Research Institute of Aviation Materials

"Brittleness of Coated Tungsten Wire"

Kiev, Problemy Prochnosti, No 6, 1973, pp 57-59

Abstract: The effect of the nature and thickness of specially grown brittle layers on tungsten wire was examined along with their behavior during fracture. The brittle layers were formed by recrystallization or carbonization. A mechanism of brittle fracture of a ductile material is proposed during the transition from a brittle coating to a crack. It is shown that the nature of fracture depends on the plastic properties and thickness of the coating. The produced experimental data correspond qualitatively with the proposed fracture mechanism. Three figures, seven bibliographic references.

1/1

APPROVED FOR RELEASE: 09/19/2001 CIA-RDP86-00513R002201810006-1"

"APPROVED FOR RELEASE: 09/19/2001 CIA-RDP86-00513R002201810006-1

Coatings

UDC 620.18:669.71

USSR

PORTNOY, K. I., LEVINSKIY, YU. V., SALIBEKOV, S. YE., DVOYCHENKOVA, L. V., and TREFILOV, B. F., Moscow

"Using the Titanium Nitride as a Diffusion Barrier in Nickel-Base Composite Materials"

Moscow, Fizika i Khimiya Obrabotki Materialov, No 3, May/Jun 73, pp 122-126

Abstract: The aim of this work was to design a commercial unit for the continuous coating of tungsten and molybdenum wire with titanium nitride and to study the behavior of these wires in a nickel matrix. The unit employs a mixture of hydrogen and nitrogen which passes into the reaction vessel and is mixed with titanium chloride. Tungsten (molybdenum) wire is drawn through the reaction vessel while heated by an electric current passing through it. The titanium tetrachloride undergoes reduction on a heated wire surface, with a simultaneous formation of titanium nitride. The optimal coating temperature was 1100°C, with a deposition rate of 0.5 μ/sec. This method makes it possible to produce coatings 3-6 μ thick on wires 300 and 310 μ thick. Titanium nitride coatings of this thickness almost completely stopped the penetration of tungsten into nickel at 1200°C and molybdenum into nickel at 1100°C during a 100-hr exposure. The strength of tungsten and molybdenum wire with titanium nitride coatings after annealing in a nickel matrix at 1000-1200°C for 1, 10, 100 hours was considerably higher that of a similar wire without the coating.

APPROVED FOR RELEASE: 09/19/2001 CIA-RDP86-00513R002201810006-1"

"APPROVED FOR RELEASE: 09/19/2001 CIA-RDP86-00513R002201810006-1

UNCLASSIFIED PROCESSING DATE--

1/2 017

TITLE--BIOSYNTHESIS OF PENICILLIN IN FERMENTING DEVICES OF VARYING CAPACITIES -U-

AUTHOR-(04)-LEVITVO, M.M., LYKYE, L.M., ZAVILEYSKAYA, G.F., SOYFER, R.D.

COUNTRY OF INFO--USSR

SOURCE--KHIM.-FARM. ZH. 1970, 4(3), 41-5

DATE PUBLISHED--------70

SUBJECT AREAS--BIOLOGICAL AND MEDICAL SCIENCES

TOPIC TAGS--BIOSYNTHESIS, PENCILLIN, FERMENTATION

CONTROL MARKING--NO RESTRICTIONS

DOCUMENT CLASS--UNCLASSIFIED STEP NO--UR/0450/70/004/003/0041/0045

PROXY REEL/FRAME--3001/0517

--AP0126265 UNCLASSIFIED

APPROVED FOR RELEASE: 09/19/2001 CIA-RDP86-00513R002201810006-1"

"APPROVED FOR RELEASE: 09/19/2001 CIA-RDP86-00513R002201810006-1

UNCLASSIFIED

PROCESSING DATE--13...

2/2 017

CIRC ACCESSION NO--AP0126265

ABSTRACT/EXTRACT--(U) GP-0- ABSTRACT. THE AMT. OF BIOSYNTHESIS OF PENICILLIN WAS SIMILAR IN THE FERMENTERS OF ACPACITIES 3000,20,000, AND 50,000 L., BUT IN THE FERMENTERS OF CAPACITY 100 L. BIOSYNTHESIS OF THE ANTIBIOTIC WAS 30PERCENT LOWER. FACILITY: VSES. NAUCH.-ISSLED. INST. ANTIBIOT., MOSCOW, USSR.

UNCLASSIFIED

APPROVED FOR RELEASE: 09/19/2001 CIA-RDP86-00513R002201810006-1"

"APPROVED FOR RELEASE: 09/19/2001 CIA-RDP86-00513R002201810006-1

UDC 614.449.57:615.285.7

USSR

LINEVA, V. A., PRSHIVORA, M., LEVIYEV, P. YA., OKULOV, V. P., GADZHIZALOV, D., SANINA, M. M., SAGATELOVA, I. S., and OBOLENSKAYA, L. F.

"Trails of the Czechoslovak Insecticide ES-50 Metathion in the USSR. I. ES-50 Metathion Used to Control the Housefly"

Moscow, Meditsinskaya Parazitologiya i Parazitarnyye Bolezni, No 2, 1970, pp 211-220

Abstract: ES-50 metathion, an organophosphorus compound derived from phenitrothion O, O-dimethyl (O-3-methyl-4-nitrophenyl) thiophosphate, was developed and tested in Czechoslovakia where it demonstrated a broad spectrum of action against flies, cockroaches, ticks, and crop pests. It has low toxicity for warm-blooded animals and no cumulative effect. Laboratory and field tests of the insecticide in five different climatic regions of the Soviet Union showed that it is highly effective in a dose of 2 g/m^2 of treated surface for 30-60 days. The temperature and humudity are the most important factors in the action of metathion. The higher the temperature and

1/2

APPROVED FOR RELEASE: 09/19/2001 CIA-RDP86-00513R002201810006-1"

"APPROVED FOR RELEASE: 09/19/2001 CIA-RDP86-00513R002201810006-1

USSR

LINEVA, V. A., et al., Moscow, Meditsinskaya Parazitologiya i Parazitarnyye Bolezni, No 2, 1970, pp 211-220

humidity, the more toxic its effect. Increasing the humidity of the room or moistening the treated surfaces increases metathion's potency, especially on glass or wood. Among the negative features: (i) it has an unpleasant odor; (ii) it leaves marks on the treated surfaces; (iii) flies seem to develop resistance to it fairly quickly.

2/2

APPROVED FOR RELEASE: 09/19/2001 CIA-RDP86-00513R002201810006-1"

"APPROVED FOR RELEASE: 09/19/2001 CIA-RDP86-00513R002201810006-1

UDC 539.27

USSR

BARZDAYN, P. P., ALEKSEYEV, N. V., LEVKIN, N. P.

"Attachment for Direct Recording of Gas Electron-Diffraction Patterns"

Moscow, Pribory i Tekhnika Eksperimenta, No 5, 1972, pp 223-225

Abstract: An attachment is described for continuous recording of gas electron-diffraction patterns the sensitive element of which is a scintillation counter. The variations in density of the vapor jet from the investigated substance and the brightness of the primary electron beam are compensated for by application of a two-channel recording system at the output of which the ratio of the intensities of the scattered electron emission recorded by each channel is fixed. A special module permits measurement of the accelerating voltage (with an accuracy of ~1%) directly during the experiment. By using the described device the scattered electron emission intensity can be recorded as a function of the angle of dispersion for the low-volatile materials to the regions of the angles of dispersion corresponding to 28-30 Å^{-1}.

APPROVED FOR RELEASE: 09/19/2001 CIA-RDP86-00513R002201810006-1"

"APPROVED FOR RELEASE: 09/19/2001 CIA-RDP86-00513R002201810006-1

Environmental & Ecological Problems

USSR

UDC 614.72:621.311.21]-037

GIL'DENSKIOL'D, R. S., Candidate of Medical Sciences, RIKHTER, V. B., and LEVKIN, V. P., Moscow Scientific Research Institute of Hygiene imeni F. F. Erisman

"Possibility of Forecasting Atmospheric Pollution and Present-Day Hygienic Preconditions for Estimating the Extent of Scattering of Emissions from Regional Electric Power Stations"

Moscow, Gigiyena i Sanitariya, No 11, 1972, pp 14-18

Abstract: The maximum permissible concentrations of sulfur dioxide and nitric oxide in the air near an electric power station, as set forth in official instructions for establishing standards for gaseous emissions, were found to be reasonably close to the values determined by actual measurements. Since nitric oxide is invariably present in electric power plant emissions, it is necessary to take into account the summation effect produced on the body by this gas and sulfur dioxide when estimating the degree of atmospheric pollution likely to result from the operation of a newly built electric power station.

1/1

APPROVED FOR RELEASE: 09/19/2001 CIA-RDP86-00513R002201810006-1"

"APPROVED FOR RELEASE: 09/19/2001 CIA-RDP86-00513R002201810006-1

USSR

VISHKAREV, O. M., KARSKIY, N. YE., and LEVKOPULO, I. A., Central Scientific Research Institute of Technology and Machine Building

"Corrosion Resistance of Nickel Alloys in Sodium"

Moscow, Zashchita Metallov, Vol 6, No 2, Mar-Apr 70, pp 220-222

Abstract: Present-day nickel alloys, relative to their heat resistance, may be used in power units with sodium heat-transfer agents at 800--900°C. The basic deterrent to the wide use of these materials is their low corrosion resistance in sodium. Earlier research indicates that increasing their aluminum content to 3--6% considerably raises their corrosion resistance. This work deals with the behavior of nickel alloys with a high aluminum content in sodium. The materials involved were: heat-resistant nickel alloy with 5% Al (Kh10M4V4Yu5T3K5), pure nickel, and austenitic steel (Kh20N30M3B5). The testing conditions in a flow of a sodium coolant were: 900°C, 300 hours, temperature gradient in flow 20 deg/m, expenditure by volume 0.2 m3/hr, linear rate 0.05 m/sec, oxygen content in sodium 2.10^{-6} wt%, filter-trap working temperature 135--150°C. The nickel alloy with the higher aluminum content exhibited the highest corrosion resistance. The result is attributed to the formation of a protective aluminum-rich oxide

1/2

APPROVED FOR RELEASE: 09/19/2001 CIA-RDP86-00513R002201810006-1"

"APPROVED FOR RELEASE: 09/19/2001 CIA-RDP86-00513R002201810006-1

USSR

VISHKAREV, O. M., et al., Zashchita Metallov, Vol 6, No 2, Mar-Apr 70, pp 220-222

film. A table in the original article gives container test data at 800°C under various oxidizing conditions. A test in argon with an excess of Cr_2O_3 was conducted to exclude the specific effect of sodium on nickel alloys. The decrease in the aluminum content in the nickel alloy after 2000 hours of testing is related to the separation of the surface layer. There was no separation in the absence of sodium in both open air and argon with Cr_2O_3 additions. Separation increases with the increase of oxygen in the sodium. The depth of peeling increases with the duration of testing.

2/2

APPROVED FOR RELEASE: 09/19/2001 CIA-RDP86-00513R002201810006-1"

"APPROVED FOR RELEASE: 09/19/2001 CIA-RDP86-00513R002201810006-1

UDC: 621.374.44

USSR

LEVKOV, B. Yu. and YEGUDOV, S. M.

"Solid-State Switched Frequency Multiplier"

Moscow, Radiotekhnika, Vol 26, No 1, 1971, pp 86-93

Abstract: Although the switching capability of frequency multipliers has been known since 1938, it has only been investigated thoroughly in the past few years. This paper discusses the potential possibilities of solid-state switched frequency multipliers and analyzes their electrical characteristics in relation to the type of circuit, the mode of operation, and the types of input oscillation. The nature of such circuits is mathematically analyzed, and it is shown that their efficiency is doubled if the number of output channels is doubled. To realize the circuit in solid-state form, a neuristor must be used to form forbidding connections in which the passage of the signal along one line forbids its passage along another. A block diagram of the circuit is given, and it is analyzed under assumption that all the circuit elements are ideal. On this basis, the efficiencies of diode and transistorized circuits are estimated. It is asserted that in integrated form, such circuits can be used in uhf. The authors express their gratitude to V. S. Andreyev for his remarks.

1/1

APPROVED FOR RELEASE: 09/19/2001 CIA-RDP86-00513R002201810006-1"

"APPROVED FOR RELEASE: 09/19/2001 CIA-RDP86-00513R002201810006-1

1/2 047 UNCLASSIFIED PROCESSING DATE--27NOV70

TITLE--LONG WAVES IN AN INHOMOGENEOUS VISCOUS FLUID -U-

AUTHOR-(02)-LEVKOV, N.P., CHERKESOV, L.V.

COUNTRY OF INFO--USSR

SOURCE--IZVESTIYA AKADEMII NAUK SSSR, FIZIKA ATMOSFERY I OKEANA, VOL VI, NO 3, 1970, PP 299-306

DATE PUBLISHED--------70

SUBJECT AREAS--PHYSICS, ATMOSPHERIC SCIENCES

TOPIC TAGS--VISCOUS FLUID, VISCOUS FLOW, NAVIER STOKES EQUATION, MOTION EQUATION, MOTION MECHANICS, OSCILLATION, ATMOSPHERIC PHYSICS

CONTROL MARKING--NO RESTRICTIONS

DOCUMENT CLASS--UNCLASSIFIED

PROXY REEL/FRAME--1992/1168 STEP NO--UR/0362/70/006/003/0299/0306

CIRC ACCESSION NO--AP0112268

UNCLASSIFIED

APPROVED FOR RELEASE: 09/19/2001 CIA-RDP86-00513R002201810006-1"

"APPROVED FOR RELEASE: 09/19/2001 CIA-RDP86-00513R002201810006-1

UNCLASSIFIED PROCESSING DATE--27...

2/2 047

CIRC ACCESSION NO--AP0112268

ABSTRACT/EXTRACT--(U) GP-0- ABSTRACT. A STUDY WAS MADE OF TWO LAYERS OF FLUID OF DIFFERENT VISCOSITY AND DENSITY. THE UPPER LAYER HAS A FREE SURFACE AND A CONSTANT DEPTH H SUB1; THE LOWER LAYER HAS A FINITE DEPTH H SUB2 (X, Y). TANGENTIAL AND NORMAL STRESSES ACT AT THE FREE SURFACE. ASSUMING THE MOVEMENTS TO BE SLOW, A LINEARIZED SYSTEM OF NAVIER-STOKES EQUATIONS CAN BE USED AS THE INITIAL SYSTEM OF EQUATIONS OF MOTION OF THE FLUID. ON THIS BASIS THE AUTHORS GIVE A SYSTEMATIC DERIVATION OF THE EQUATIONS FOR LONG WAVES IN A TWO LAYER VISCOUS FLUID AND EXAMINE THE PROBLEM OF INTERNAL LONG WAVES CAUSED BY PERIODIC OSCILLATIONS OF ATOMSPHERIC PRESSURE IN THE ABSENCE AND IN THE PRESENCE OF AN ICE COVER.

FACILITY: MARINE HYDROPHYSICAL INSTITUTE, ACADEMY OF SCIENCES UKRAINIAN SSR; MOSCOW.

UNCLASSIFIED

APPROVED FOR RELEASE: 09/19/2001 CIA-RDP86-00513R002201810006-1"

"APPROVED FOR RELEASE: 09/19/2001 CIA-RDP86-00513R002201810006-1

USSR

UDC 669.713.1

SAFONOV, V. N., LIMANSKIY, V. A., KLYUSHKIN, V. P., LEVKOV, YE. G., BULGAKOVA, N. G., IL'BINSKAYA, G. I., BORISENKO, N. A., and LEVKOVA, A. S.

"Physical Properties and Chemical Composition of Dust Formed During the Production of Aluminum and Silumin"

Tsvetnye Metally, No 4, Apr 71, pp 43-44

Abstract: Since the physical and chemical composition of a dust dictates the basic characteristics of the dust-collecting apparatus needed, a study was made of these characteristics of dusts collected during the production of electrolytic aluminum and silumin. Two methods of determining dispersibility were studied -- using triple cyclones and using impactors. The latter were found to give the most reliable results. The specific electric resistance for the dusts was measured and found to be $4 \times 10^7 - 4 \times 10^9$ ohms. cm for electrolytic aluminum and $5 \times 10^9 - 2 \times 10^{10}$ ohms.cm for silumin dust at the dew point of the gas in the temperature range of 20 to 40°C. At 100°C both forms of dust have a specific electrical resistance of less than $10^9 - 10^{10}$ ohms.cm. Other characteristics determined were density, bulk density, angle of rest, porosity, and moisture. The electrolytic aluminum dust was analyzed for total fluorine, Al_2O_3, Na_2O, Fe_2O_3, SiO_2, CaO, MgO, resin, SO_4^{-2}, and calcination loss. 1/1

APPROVED FOR RELEASE: 09/19/2001 CIA-RDP86-00513R002201810006-1"

"APPROVED FOR RELEASE: 09/19/2001 CIA-RDP86-00513R002201810006-1

UDC 669.713.1

USSR

SAFONOV, V. N., LIMANSKIY, V. A., KLYUSHKIN, V. P., LEVIKOV, YE. G., BULGAKOVA, N. G., IL'BINSKAYA, G. I., BORISENKO, N. A., and LEVKOVA, A. S.

"Physical Properties and Chemical Composition of Dust Formed During the Production of Aluminum and Silumin"

Tsvetnye Metally, No 4, Apr 71, pp 43-44

Abstract: Since the physical and chemical composition of a dust dictates the basic characteristics of the dust-collecting apparatus needed, a study was made of these characteristics of dusts collected during the production of electrolytic aluminum and silumin. Two methods of determining dispersibility were studied -- using triple cyclones and using impactors. The latter were found to give the most reliable results. The specific electric resistance for the dusts was measured and found to be $4 \times 10^7 - 4 \times 10^8$ ohms. cm for electrolytic aluminum and $5 \times 10^9 - 2 \times 10^{10}$ ohms.cm for silumin dust at the dew point of the gas in the temperature range of 20 to 40°C. At 100°C both forms of dust have a specific electrical resistance of less than 10^9 - 10^{10} ohms.cm. Other characteristics determined were density, bulk density, angle of rest, porosity, and moisture. The electrolytic aluminum dust was analyzed for total fluorine, Al_2O_3, Na_2O, Fe_2O_3, SiO_2, CaO, MgO, resin, SO_4^{-2}, and calcination loss. 1/1

APPROVED FOR RELEASE: 09/19/2001 CIA-RDP86-00513R002201810006-1"

"APPROVED FOR RELEASE: 09/19/2001 CIA-RDP86-00513R002201810006-1

USSR

UDC 542.91:547.1'118

ALIMOV, P. I., LEVKOVA, L. N., ANTOKHINA, L. A., and CHEPLANOVZ, I. V.,
Institute of Organic and Physical Chemistry imeni A. Ye. Arbuzov, USSR,
Academy of Sciences

"Reaction of Acid Chlorides with Alialkylphoric and Carboxylic Acid Amides"

Moscow, Izvestiya Akademy Nauk SSSR, Seriya Khimicheskaya, No 1, Jan 72,
pp 147-150

Abstract: In connection with data obtained earlier on the reactions between dialkylphosphoryl chlorides and various substituted and unsubstituted formations (P. I. ALIMOV et al), it was of interest to apply a similar approach in the case of reactions of acetyl, butyryl and benzoyl chlorides with diethylphoric acid amide, and also to the reaction of diethylphoryl chloride with acetic, butyric and benzoic acid amides, and also with formanilide.

In the case of diethylphoric acid amide, the reaction proceeds with the formation of acetylamide phosphates; in the case of the other amides, and formanilide, with the formation of the ethyl ether of pyrophosphoric acid and the corresponding nitryls or phenylisonitryl.

Reaction schemes, analytical data, etc., are given.

1/1

APPROVED FOR RELEASE: 09/19/2001 CIA-RDP86-00513R002201810006-1"

"APPROVED FOR RELEASE: 09/19/2001 CIA-RDP86-00513R002201810006-1

USSR

UDC 547.787 + 547.867 + 661.718.1

LEVKOVA, L. N., ALIMOV, P. I., and SHAGIDULLIN, R. R., Institute of Organic and Physical Chemistry imeni A. Ye. Arbuzov, Academy of Sciences USSR

"Preparation of N-Phosphorylated 2-Oxo-1,3-oxazolidines and 6-Methyl-2-oxo-1,3-tetrahydrooxazine"

Moscow, Izvestiya Akademii Nauk SSSR, Seriya Khimicheskaya, No 2, Feb 70, pp 396-399

Abstract: The reaction of N-diethylphosphonoiminocarbonyl chloride with ethylene glycol, 1,2-propylene glycol, 1,3-butylene glycol and 2,3-butylene glycol in the presence of triethylamine in a dioxane medium gives N-phosphorylated 2-oxo-1,3-oxazolidines and 6-methyl-3-diethylphono-2-oxo-1,3-tetrahydrooxazine.

1/1

APPROVED FOR RELEASE: 09/19/2001 CIA-RDP86-00513R002201810006-1"

"APPROVED FOR RELEASE: 09/19/2001 CIA-RDP86-00513R002201810006-1

APPROVED FOR RELEASE: 09/19/2001 CIA-RDP86-00513R002201810006-1"

"APPROVED FOR RELEASE: 09/19/2001 CIA-RDP86-00513R002201810006-1

Environmental & Ecological Problems

USSR UDC 614.72:621.311.21]-037

GIL'DENSKIOL'D, R. S., Candidate of Medical Sciences, RUGHER, V. B., and LEVKIN, V. P., Moscow Scientific Research Institute of Hygiene imeni F. F. Erisman

"Possibility of Forecasting Atmospheric Pollution and Present-Day Hygienic Preconditions for Estimating the Extent of Scattering of Emissions from Regional Electric Power Stations"

Moscow, Gigiyena i Sanitariya, No 11, 1972, pp 14-18

Abstract: The maximum permissible concentrations of sulfur dioxide and nitric oxide in the air near an electric power station, as set forth in official instructions for establishing standards for gaseous emissions, were found to be reasonably close to the values determined by actual measurements. Since nitric oxide is invariably present in electric power plant emissions, it is necessary to take into account the summation effect produced on the body by this gas and sulfur dioxide when estimating the degree of atmospheric pollution likely to result from the operation of a newly built electric power station.

1/1

APPROVED FOR RELEASE: 09/19/2001 CIA-RDP86-00513R002201810006-1"

USSR UDC 539.27

BARZDAYN, P. P., ALEKSEYEV, N. V., LEVKIN, N. P.

"Attachment for Direct Recording of Gas Electron-Diffraction Patterns"

Moscow, Pribory i Tekhnika Eksperimenta, No 5, 1972, pp 223-225

Abstract: An attachment is described for continuous recording of gas electron-diffraction patterns the sensitive element of which is a scintillation counter. The variations in density of the vapor jet from the investigated substance and the brightness of the primary electron beam are compensated for by application of a two-channel recording system at the output of which the ratio of the intensities of the scattered electron emission recorded by each channel is fixed. A special module permits measurement of the accelerating voltage (with an accuracy of ~1%) directly during the experiment. By using the described device the scattered electron emission intensity can be recorded as a function of the angle of dispersion for the low-volatile materials to the regions of the angles of dispersion corresponding to 28-30 $Å^{-1}$.

"APPROVED FOR RELEASE: 09/19/2001 CIA-RDP86-00513R002201810006-1

USSR

VISHKAREV, O. M., KARSKIY, N. YE., and LEVKOPULO, I. A., Central Scientific Research Institute of Technology and Machine Building

"Corrosion Resistance of Nickel Alloys in Sodium"

Moscow, Zashchita Metallov, Vol 6, No 2, Mar-Apr 70, pp 220-222

Abstract: Present-day nickel alloys, relative to their heat resistance, may be used in power units with sodium heat-transfer agents at 800--900°C. The basic deterrent to the wide use of these materials is their low corrosion resistance in sodium. Earlier research indicates that increasing their aluminum content to 3--6% considerably raises their corrosion resistance. This work deals with the behavior of nickel alloys with a high aluminum content in sodium. The materials involved were: heat-resistant nickel alloy with 5% Al (Kh10M4V4Yu5T3K5), pure nickel, and austenitic steel (Kh20N30M3B5). The testing conditions in a flow of a sodium coolant were: 900°C, 300 hours, temperature gradient in flow 20 deg/m, expenditure by volume 0.2 m^3/hr, linear rate 0.05 m/sec, oxygen content in sodium 2.10^{-2} wt%, filter-trap working temperature 135--150°C. The nickel alloy with the higher aluminum content exhibited the highest corrosion resistance. The result is attributed to the formation of a protective aluminum-rich oxide

1/2

APPROVED FOR RELEASE: 09/19/2001 CIA-RDP86-00513R002201810006-1"

"APPROVED FOR RELEASE: 09/19/2001 CIA-RDP86-00513R002201810006-1

USSR

VISHKAREV, O. M., et al., Zashchita Metallov, Vol 6, No 2, Mar-Apr 70, pp 220-222

film. A table in the original article gives container test data at 800°C under various oxidizing conditions. A test in argon with an excess of Cr_2O_3 was conducted to exclude the specific effect of sodium on nickel alloys. The decrease in the aluminum content in the nickel alloy after 2000 hours of testing is related to the separation of the surface layer. There was no separation in the absence of sodium in both open air and argon with Cr_2O_3 additions. Separation increases with the increase of oxygen in the sodium. The depth of peeling increases with the duration of testing.

2/2

APPROVED FOR RELEASE: 09/19/2001 CIA-RDP86-00513R002201810006-1"

"APPROVED FOR RELEASE: 09/19/2001 CIA-RDP86-00513R002201810006-1

USSR UDC: 621.374.44

LEVKOV, B. Yu. and YEGUDOV, S. M.

"Solid-State Switched Frequency Multiplier"

Moscow, Radiotekhnika, Vol 26, No 1, 1971, pp 86-93

Abstract: Although the switching capability of frequency multipliers has been known since 1938, it has only been investigated thoroughly in the past few years. This paper discusses the potential possibilities of solid-state switched frequency multipliers and analyzes their electrical characteristics in relation to the type of circuit, the mode of operation, and the types of input oscillation. The nature of such circuits is mathematically analyzed, and it is shown that their efficiency is doubled if the number of output channels is doubled. To realize the circuit in solid-state form, a neuristor must be used to form forbidding connections in which the passage of the signal along one line forbids its passage along another. A block diagram of the circuit is given, and it is analyzed under assumption that all the circuit elements are ideal. On this basis, the efficiencies of diode and transistorized circuits are estimated. It is asserted that in integrated form, such circuits can be used in uhf. The authors express their gratitude to V. S. Andreyev for his remarks.

1/1

APPROVED FOR RELEASE: 09/19/2001 CIA-RDP86-00513R002201810006-1"

"APPROVED FOR RELEASE: 09/19/2001 CIA-RDP86-00513R002201810006-1

1/2 047 UNCLASSIFIED PROCESSING DATE--27NOV70

TITLE--LONG WAVES IN AN INHOMOGENEOUS VISCOUS FLUID -U-

AUTHOR-(02)-LEVKOV, N.P., CHERKESOV, L.V.

COUNTRY OF INFO--USSR

SOURCE--IZVESTIYA AKADEMII NAUK SSSR, FIZIKA ATMOSFERY I OKEANA, VOL VI, NO 3, 1970, PP 299-306

DATE PUBLISHED--------70

SUBJECT AREAS--PHYSICS, ATMOSPHERIC SCIENCES

TOPIC TAGS--VISCOUS FLUID, VISCOUS FLOW, NAVIER STOKES EQUATION, MOTION EQUATION, MOTION MECHANICS, OSCILLATION, ATMOSPHERIC PHYSICS

CONTROL MARKING--NO RESTRICTIONS

DOCUMENT CLASS--UNCLASSIFIED

PROXY REEL/FRAME--1992/1168 STEP NO--UR/0362/70/006/003/0299/0306

CIRC ACCESSION NO--AP0112268

UNCLASSIFIED

APPROVED FOR RELEASE: 09/19/2001 CIA-RDP86-00513R002201810006-1"

"APPROVED FOR RELEASE: 09/19/2001 CIA-RDP86-00513R002201810006-1

2/2 047 UNCLASSIFIED PROCESSING DATE--27NOV70

CIRC ACCESSION NO--AP0112268

ABSTRACT/EXTRACT--(U) GP-0- ABSTRACT. A STUDY WAS MADE OF TWO LAYERS OF FLUID OF DIFFERENT VISCOSITY AND DENSITY. THE UPPER LAYER HAS A FREE SURFACE AND A CONSTANT DEPTH H SUB1; THE LOWER LAYER HAS A FINITE DEPTH H SUB2 (X, Y). TANGENTIAL AND NORMAL STRESSES ACT AT THE FREE SURFACE. ASSUMING THE MOVEMENTS TO BE SLOW, A LINEARIZED SYSTEM OF NAVIER-STOKES EQUAITONS CAN BE USED AS THE INITIAL SYSTEM OF EQUATIONS OF MOTION OF THE FLUID. ON THIS BASIS THE AUTHORS GIVE A SYSTEMATIC DERIVATION OF THE EQUATIONS FOR LONG WAVES IN A TWO LAYER VISCOUS FLUID AND EXAMINE THE PROBLEM OF INTERNAL LONG WAVES CAUSED BY PERIODIC OSCILLATIONS OF ATOMSPHERIC PRESSURE IN THE ABSENCE AND IN THE PRESENCE OF AN ICE COVER.

FACILITY: MARINE HYDROPHYSICAL INSTITUTE, ACADEMY OF SCIENCES UKRAINIAN SSR; MOSCOW.

UNCLASSIFIED

APPROVED FOR RELEASE: 09/19/2001 CIA-RDP86-00513R002201810006-1"

"APPROVED FOR RELEASE: 09/19/2001 CIA-RDP86-00513R002201810006-1

USSR

UDC 669.713.1

SAFONOV, V. N., LIMANSKIY, V. A., KLYUSHKIN, V. P., LEVKOV, YE. G., BULGAKOVA, N. G., IL'BINSKAYA, G. I., BORISENKO, N. A., and LEVKOVA, A. S.

"Physical Properties and Chemical Composition of Dust Formed During the Production of Aluminum and Silumin"

Tsvetnye Metally, No 4, Apr 71, pp 43-44

Abstract: Since the physical and chemical composition of a dust dictates the basic characteristics of the dust-collecting apparatus needed, a study was made of these characteristics of dusts collected during the production of electrolytic aluminum and silumin. Two methods of determining dispersibility were studied -- using triple cyclones and using impactors. The latter were found to give the most reliable results. The specific electric resistance for the dusts was measured and found to be $4 \times 10^7 - 4 \times 10^8$ ohms. cm for electrolytic aluminum and $5 \times 10^9 - 2 \times 10^{10}$ ohms.cm for silumin dust at the dew point of the gas in the temperature range of 20 to 40°C. At 100°C both forms of dust have a specific electrical resistance of less than $10^9 - 10^{10}$ ohms.cm. Other characteristics determined were density, bulk density, angle of rest, porosity, and moisture. The electrolytic aluminum dust was analyzed for total fluorine, Al_2O_3, Na_2O, Fe_2O_3, SiO_2, CaO, MgO, resin, SO_4^{-2}, and calcination loss. 1/1

APPROVED FOR RELEASE: 09/19/2001 CIA-RDP86-00513R002201810006-1"

"APPROVED FOR RELEASE: 09/19/2001 CIA-RDP86-00513R002201810006-1

USSR UDC 669.713.1

SAFONOV, V. N., LIMANSKIY, V. A., KLYUSHKIN, V. P., LEVKOV, YE. G., BULGAKOVA, N. G., IL'BINSKAYA, G. I., BORISENKO, N. A., and LEVKOVA, A. S.

"Physical Properties and Chemical Composition of Dust Formed During the Production of Aluminum and Silumin"

Tsvetnye Metally, No 4, Apr 71, pp 43-44

Abstract: Since the physical and chemical composition of a dust dictates the basic characteristics of the dust-collecting apparatus needed, a study was made of these characteristics of dusts collected during the production of electrolytic aluminum and silumin. Two methods of determining dispersibility were studied -- using triple cyclones and using impactors. The latter were found to give the most reliable results. The specific electric resistance for the dusts was measured and found to be $4 \times 10^7 - 4 \times 10^8$ ohms. cm for electrolytic aluminum and $5 \times 10^9 - 2 \times 10^{10}$ ohms.cm for silumin dust at the dew point of the gas in the temperature range of 20 to 40°C. At 100°C both forms of dust have a specific electrical resistance of less than $10^9 - 10^{10}$ ohms.cm. Other characteristics determined were density, bulk density, angle of rest, porosity, and moisture. The electrolytic aluminum dust was analyzed for total fluorine, Al_2O_3, Na_2O, Fe_2O_3, SiO_2, CaO, MgO, resin, SO_4^{-2}, and calcination loss. 1/1

APPROVED FOR RELEASE: 09/19/2001 CIA-RDP86-00513R002201810006-1"

"APPROVED FOR RELEASE: 09/19/2001 CIA-RDP86-00513R002201810006-1

USSR UDC 542.91:547.1'118

ALIMOV, P. I., LEVKOVA, L. N., ANTOKHINA, L. A., and CHEPLANOVZ, I. V., Institute of Organic and Physical Chemistry imeni A. Ye. Arbuzov, USSR, Academy of Sciences

"Reaction of Acid Chlorides with Aialkylphoric and Carboxylic Acid Amides"

Moscow, Izvestiya Akademy Nauk SSSR, Seriya Khimicheskaya, No 1, Jan 72, pp 147-150

Abstract: In connection with data obtained earlier on the reactions between dialkylphosphoryl chlorides and various substituted and unsubstituted formations (P. I. ALIMOV et al), it was of interest to apply a similar approach in the case of reactions of acetyl, butyryl and benzoyl chlorides with diethylphoric acid amide, and also to the reaction of diethylphoryl chloride with acetic, butyric and benzoic acid amides, and also with formanilide.

In the case of diethylphoric acid amide, the reaction proceeds with the formation of acetylamide phosphates; in the case of the other amides, and formanilide, with the formation of the ethyl ether of pyrophosphoric acid and the corresponding nitryls or phenylisonitryl.

Reaction schemes, analytical data, etc., are given.

1/1 - 14 -

APPROVED FOR RELEASE: 09/19/2001 CIA-RDP86-00513R002201810006-1"

"APPROVED FOR RELEASE: 09/19/2001 CIA-RDP86-00513R002201810006-1

USSR UDC 547.787 + 547.867 + 661.718.1

LEVKOVA, L. N., ALIMOV, P. I., and SHAGIDULLIN, R. R., Institute of Organic and Physical Chemistry imeni A. Ye. Arbuzov, Academy of Sciences USSR

"Preparation of N-Phosphorylated 2-Oxo-1,3-oxazolidines and 6-Methyl-2-oxo-1,3-tetrahydrooxazine"

Moscow, Izvestiya Akademii Nauk SSSR, Seriya Khimicheskaya, No 2, Feb 70, pp 396-399

Abstract: The reaction of N-diethylphosphonoiminocarbonyl chloride with ethylene glycol, 1,2-propylene glycol, 1,3-butylene glycol and 2,3-butylene glycol in the presence of triethylamine in a dioxane medium gives N-phosphorylated 2-oxo-1,3-oxazolidines and 6-methyl-3-diethylphono-2-oxo-1,3-tetrahydrooxazine.

1/1

APPROVED FOR RELEASE: 09/19/2001 CIA-RDP86-00513R002201810006-1"

"APPROVED FOR RELEASE: 09/19/2001 CIA-RDP86-00513R002201810006-1

1/2 015 UNCLASSIFIED PROCESSING DATE--30OCT70

TITLE--PREPARATION OF N,PHOSPHORYLATED 2,OXO,1,3,OXAZOLIDINES AND 6,METHYL,1,OXO,1,3,TETRAHYDROOXAZINE -U-

AUTHOR-(03)-LEVKOVA, L.N., ALIMOV, P.I., SHAGIDULLIN, R.R.

COUNTRY OF INFO--USSR

SOURCE--IZV. AKAD. NAUK. SSSR, SER. KHIM. 1970, (2), 369-9

DATE PUBLISHED--------70

SUBJECT AREAS--CHEMISTRY

TOPIC TAGS--ORGANIC PHOSPHORUS COMPOUND, KETONE, HETEROCYCLIC BASE COMPOUND, TRIETHYLAMINE, ORGAINC OXYGEN COMPOUND, ORGANIC AZOLE COMPOUND

CONTROL MARKING--NO RESTRICTIONS

DOCUMENT CLASS--UNCLASSIFIED

PROXY REEL/FRAME--1997/1183 STEP NO--UR/0062/70/000/002/0396/0399

CIRC ACCESSION NO--AP0120030

UNCLASSIFIED

APPROVED FOR RELEASE: 09/19/2001 CIA-RDP86-00513R002201810006-1"

"APPROVED FOR RELEASE: 09/19/2001 CIA-RDP86-00513R002201810006-1

2/2 015 UNCLASSIFIED PROCESSING DATE--30OCT70

CIRC ACCESSION NO--AP0120030

ABSTRACT/EXTRACT--(U) GP-0- ABSTRACT. TO 8.18 G (ETO) SUB2 P(O)N:CCL SUB2 IN DIOXANE WAS ADDED WITH ICE COOLIN 2.17 G (CH SUB2 OH) SUB2 AND 7.07 G ET SUB3 N TO YIELD AFTER 2.5 HR AT ROOM TEMP. 18PERCENT I(R EQUALS R PRIME1 EQUALS H), B SUB0.5 121-2DEGREES, N PRIME20 SUB2 1.4520, D PRIME20 1.2609. SIMILARLY WERE PREPD. 26.5PERCENT II(R EQUALS H, R PRIME1 EQUALS ME), B SUB0.5 108-10DEGREES, 1.4530, 1.2343; 20.5PERCENT I (R EQUALS R PRIME1 EQUALS ME), B SUB0.5 140-2DEGREES, 1.4560, 1.1871; AND 23PERCENT II, B SUB0.5 128-30DEGREES, 1.4565, 1.2031. IR CURVES (2) WERE SHOWN AND DISCUSSED. FACILITY: INST. ORG. FIZ. KHIM. IM. ARBUZOVA, KAZAN, USSR.

UNCLASSIFIED

APPROVED FOR RELEASE: 09/19/2001 CIA-RDP86-00513R002201810006-1"

"APPROVED FOR RELEASE: 09/19/2001 CIA-RDP86-00513R002201810006-1

1/2 023 UNCLASSIFIED PROCESSING DATE--30OCT70

TITLE--PHOTOMULTIPLIER SPECTRAL SENSITIVITY AS A FUNCITON OF VOLTAGE AND I.R. ILLUMINATION -U-

AUTHOR-(04)-TOLKACH, P.N., PERTSEV, A.N., CHUDAKOV, V.A., LEVKOVICH, A.D.

COUNTRY OF INFO--USSR

SOURCE--ZH. PRIKLAD. SPEKTROSK. (USSR) VO. 12. NO. 1. P. 126-128 (JAN 1970).

DATE PUBLISHED--------70

SUBJECT AREAS--ELECTRONICS AND ELECTRICAL ENGR.

TOPIC TAGS--IR PHOTOMULTIPLIER, PULSED ILLUMINATION, PHOTOCATHODE

CONTROL MARKING--NO RESTRICTIONS

DOCUMENT CLASS--UNCLASSIFIED

PROXY REEL/FRAME--1998/1764 STEP NO--UR/0368/70/012/001/0126/0128

CIRC ACCESSION NO--AP0122094

UNCLASSIFIED

APPROVED FOR RELEASE: 09/19/2001 CIA-RDP86-00513R002201810006-1"

"APPROVED FOR RELEASE: 09/19/2001 CIA-RDP86-00513R002201810006-1

2/2 023 UNCLASSIFIED PROCESSING DATE--30OCT70

CIRC ACCESSION NO--AP0122094

ABSTRACT/EXTRACT--(U) GP-0- ABSTRACT. CURRENTS OF PHOTOCATHODE, DIAPHRAGM, AND FIRST DYNODE WERE MEASURED DURING IRRADIATION OF THE PHOTOCATHODE BY LIGHT WITH A WAVELENGTH OF NU SUB1 EQUALS 650 NM AND NU SUB2 EQUALS 450 NM, AND AS A FUNCTION OF SUPPLY VOLTAGE, AS WELL AS WITH (AND WITHOUT) I.R. ILLUMINATION. THE I.R. ILLUMINATION IN THE REGIME OF SATURATION INCREASES THE PHOTOCATHODE CURRENT, WHILE THE DIFFERENCE BETWEEN THE DYNODE AND CATHODE CURRENTS IS POSITIVE. AT THE SAME TIME, THE RATIO OF LATTER DIFFERENCE AND OF THE DYNODE CURRENT IS A FUNCTION OF THE WAVELENGTH. THE RATIO OF DYNODE CURRENTS FOR THE TWO WAVELENGHTS DEPENDS UPON THE VOLTAGE BEFORE THE SATURATION REGIME. THE OBSERVED EFFECTS, WHICH AMOUNT TO SEVERAL PERCENTS, ARE INTERPRETED ON THE BASIS OF SB-CS PHOTOCATHODE MODEL.

UNCLASSIFIED

APPROVED FOR RELEASE: 09/19/2001 CIA-RDP86-00513R002201810006-1"

"APPROVED FOR RELEASE: 09/19/2001 CIA-RDP86-00513R002201810006-1

1/2 042 UNCLASSIFIED PROCESSING DATE--23OCT70

TITLE--USE OF ACID ESTERS OF TETRACARBOXYLIC ACIDS AND POLYPROPYLENE GLYCOLS AS HARDENERS FOR THE PREPARATION OF HEAT RESISTANT COATING BASED

AUTHOR-(02)-LEVKOVICH, G.A., GVOZDEVA, F.N.

COUNTRY OF INFO--USSR

SOURCE--LAKOKRASOCH. MATER. IKH PRIMEN. 1970, (1), 7-9

DATE PUBLISHED--------70

SUBJECT AREAS--MATERIALS

TOPIC TAGS--CARBOXYLIC ACID ESTER, GLYCOL, POLYPROPYLENE, EPOXY RESIN, ORGANOSILICON COMPOUND, CONDENSATION REACTION, PYROMELLITIC ACID, ANHYDRIDE, HETEROCYCLIC OXYGEN COMPOUND, ELASTICITY, IMPACT STRENGTH, PLASTIC COATING, HEAT RESISTANCE/(U)KE30 EPOXY SILICONE RESIN

CONTROL MARKING--NO RESTRICTIONS

DOCUMENT CLASS--UNCLASSIFIED

PROXY REEL/FRAME--1997/0431 STEP NO--UR/0303/70/000/001/0007/0009

CIRC ACCESSION NO--AP0119367

UNCLASSIFIED

APPROVED FOR RELEASE: 09/19/2001 CIA-RDP86-00513R002201810006-1"

"APPROVED FOR RELEASE: 09/19/2001 CIA-RDP86-00513R002201810006-1

2/2 042 UNCLASSIFIED PROCESSING DATE--23OCT70

CIRC ACCESSION NO--AP0119367

ABSTRACT/EXTRACT--(U) GP-0- ABSTRACT. THE CONDENSATION OF PYROMELLITIC DIANHYDRIDE, BUTANETETRACARBOXYLIC ACID DIANHYDRIDE, OR CYCLOPENTANETETRACARBOXYLIC ACID DIANHYDRIDE WITH HO(CH SUB2 CHMEO) SUBN H (MOL. WT. 415-528) IN CYCLOHEXANONE AT 120-30DEGREES GAVE DIRECTLY SOLNS. OF RO(CH SUB2 CHMEO) SUBN R (I) (R SI, E.G., II, III, OR IV), WHICH WERE USED AS EPOXY RESIN HARDENERS. I WERE PARTICULARLY EFFECTIVE IN HARDENING EPOXY SILICONE RESINS KE-30 AND KE-40 (PREPD. BY REACTING ALKOXYSILOXANES WITH EPOXY RESINS). THE HARDENING OF THESE RESINS WITH I GAVE FILMS WHICH LOST LESS THAN OR EQUAL TO 30.2 WT. PERCENT ON HEATING TO 620DEGREES AND RETAINED ELASTICITY AND SUFFICIENT IMPACT STRENGTH UP TO 620DEGREES.

UNCLASSIFIED

APPROVED FOR RELEASE: 09/19/2001 CIA-RDP86-00513R002201810006-1"

"APPROVED FOR RELEASE: 09/19/2001 CIA-RDP86-00513R002201810006-1

5

USSR

UDC 621.791.856.2.03

GUREVICH, S. M., NERODENKO, M. M., POVOD, A. G., TETERVAK, A. F., ASNIS, YE. A., Institute of Electric Welding imeni Ye. O. Paton, Academy of Sciences UkrSSR, GRISHIN, V. K., FERTIKOV, V. G., ESTRIN, V. N., LEVKOVICH, R. M., Moscow

"Equipment for Welding Chemically-Active Refractory Metals in a Controlled High Purity Helium Atmosphere"

Kiev, Avtomaticheskaya Svarka, No 8, Aug 70, pp 45-47

Abstract: A description is given of equipment for manual and automatic electric welding of refractory metals in a controlled atmosphere of high-purity helium. The equipment, which was developed at the Institute of Electric Welding imeni Ye. O. Paton, ensures continuous control of oxygen, nitrogen, and water vapor impurities and helium regneration. It consists of a welding chamber with a vacuum system; 2) equipment for helium purification and 3) a helium purity control system. A photograph and schematic diagram of the installation are presented. The welding chamber (700 mm in diameter, volume, approximately 1000 l) is made of

1/2

APPROVED FOR RELEASE: 09/19/2001 CIA-RDP86-00513R002201810006-1"

"APPROVED FOR RELEASE: 09/19/2001 CIA-RDP86-00513R002201810006-1

USSR

GUREVICH, S. M., et al., Avtomaticheskaya Svarka, No 8, Aug 70, pp 45-47

1Kh18N9T steel. It is provided with a VN-1 suction pump, making it possible to obtain a 2 x 10^{-5} torr vacuum in the chamber with full load. A sorption method using activated carbon and zeolite at liquid nitrogen temperature at an absorber pressure of 150 atm is used for helium purification. A KhG-type gas chromatograph is used for helium purity control.

2/2

APPROVED FOR RELEASE: 09/19/2001 CIA-RDP86-00513R002201810006-1"

"APPROVED FOR RELEASE: 09/19/2001 CIA-RDP86-00513R002201810006-1

1/2 023 UNCLASSIFIED PROCESSING DATE--18SEP70

TITLE--ON METHODS OF DETERMINATION OF THE NUMBER OF GENERATIONS IN SYNANTHROPIC FLIES -U-

AUTHOR--LEVKOVICH, V.G.

COUNTRY OF INFO--USSR

SOURCE--MEDITSINSKAYA PARAZITOLOGIYA I PARAZITARNYYE BOLEZNI, 1970, VOL 39, NR 1, PP 103-106

DATE PUBLISHED--------70

SUBJECT AREAS--BIOLOGICAL AND MEDICAL SCIENCES

TOPIC TAGS--INSECT VECTOR, ECOLOGY

CONTROL MARKING--NO RESTRICTIONS

DOCUMENT CLASS--UNCLASSIFIED

PROXY REEL/FRAME--1985/0412 STEP NO--UR/0358/70/039/001/0103/0106

CIRC ACCESSION NO--AP0100894

UNCLASSIFIED

APPROVED FOR RELEASE: 09/19/2001 CIA-RDP86-00513R002201810006-1"

"APPROVED FOR RELEASE: 09/19/2001 CIA-RDP86-00513R002201810006-1

2/2 023 UNCLASSIFIED PROCESSING DATE--18SEP70

CIRC ACCESSION NO--AP0100894

ABSTRACT/EXTRACT--(U) GP-0- ABSTRACT. PEAKS IN THE CURVE OF THE SEASONAL PREVALENCE OF ONE OR ANOTHER SPECIES OF FLIES DO NOT ALWAYS REFLECT THE TIME OF EMERGENCE OF NEW GENERATIONS. UNDER UNFAVOURABLE CONDITIONS THE EMERGENCE OF A NEW GENERATION IS NOT ABUNDANT AND THERE MAY BE NO PEAK IN THE CURVE OF THE SEASONAL PREVALENCE OF THE POPULATION. FOR THE ACCURATE DETERMINATION OF THE NUMBER OF GENERATIONS, ANALYSIS OF THE AGE COMPOSITION OF THE POPULATION SHOULD BE MADE IN ADDITION TO REGISTRATION OF THE SEASONAL PREVALENCE. DURING THE PERIOD OF OBSERVATIONS IN THE TOWN OF PENZA C. VICIAN IN 1965-1966 AND C. URALENSIS IN 1966 HAD THREE GENERATIONS DURING THE SEASON.

UNCLASSIFIED

APPROVED FOR RELEASE: 09/19/2001 CIA-RDP86-00513R002201810006-1"

"APPROVED FOR RELEASE: 09/19/2001 CIA-RDP86-00513R002201810006-1

USSR

UDC 576.858.25.095.6.095.18:615.217.32

ZASUKHINA, G. D., FROLOVA, M. M., and LEVKOVICH, Ye. N., Institute of Poliomyelitis and Virus Encephalitis, Academy of Medical Sciences USSR, Moscow

"Investigation of the Effect of Guanidine on the Replication of Chikungunya Virus"

Moscow, Voprosy Virusology, No 6, Nov/Dec 70, pp 735-736

Abstract: The inhibitory effect of guanidine on variants of the Chikungunya virus was studied. One variant (S^+) included 10-13% of platelets 3-4 mm in diameter and the remainder 1-mm platelets. The second variants (S^-) was homogeneous (1-mm platelets) and stable in passages in chick embryo tissue cultures. The two variants were affected differently by various guanidine concentrations. Guanidine increased the number of platelets formed by both variants in old tissue cultures, perhaps as a result of the effect of guanidine on the antivirus activity of interferon. The effect of guanidine on platelet size is regarded as being related to the characteristics of virus replication in the presence of guanidine.

1/1

APPROVED FOR RELEASE: 09/19/2001 CIA-RDP86-00513R002201810006-1"

"APPROVED FOR RELEASE: 09/19/2001 CIA-RDP86-00513R002201810006-1

1/2 014 UNCLASSIFIED PROCESSING DATE--16OCT70

TITLE--DECAY OF POTASSIUM-44 AND SCANDIUM-44 -U-

AUTHOR-(02)-LEVKOVSKIY, V.N., KAZACHEVSKIY, I.V.

COUNTRY OF INFO--USSR

SOURCE--YAD. FIZ. 1970, 11(3), 483-4

DATE PUBLISHED--------70

SUBJECT AREAS--NUCLEAR SCIENCE AND TECHNOLOGY

TOPIC TAGS--RADIOACTIVE DECAY SCHEME, POTASSIUM ISOTOPE, SCANDIUM ISOTOPE, GAMMA SPECTRUM, BETA SPECTRUM

CONTROL MARKING--NO RESTRICTIONS

DOCUMENT CLASS--UNCLASSIFIED

PROXY REEL/FRAME--1991/1058 STEP NO--UR/0367/70/011/003/0483/0484

CIRC ACCESSION NO--AP0110748

UNCLASSIFIED

APPROVED FOR RELEASE: 09/19/2001 CIA-RDP86-00513R002201810006-1"

"APPROVED FOR RELEASE: 09/19/2001 CIA-RDP86-00513R002201810006-1

2/2 014 UNCLASSIFIED PROCESSING DATE--16OCT70

CIRC ACCESSION NO--AP0110748

ABSTRACT/EXTRACT--(U) GP-0- ABSTRACT. THE DECAY SCHEMES WERE ESTABLISHED BY GAMMA SPECTROSCOPY WITH GE(LI) DETECTORS AND BETA SCINTILLATION SPECTROMETRY. THE 1157 PLUS OR MINUS 1 KEV GAMMA LINE (INTENSITY REF., 100) OF PRIME44 K COINCIDED WITH THE 2151 PLUS OR MINUS 1 (38.4) AND 2518 PLUS OR MINUS 1 (14.6) GAMMA LINES, BUT THE GAMMA LINE 3661 PLUS OR MINUS 1 (10.4) APPARENTLY DID NOT. THE MAX. BETA ENERGY OF PRIME44 K, 5580 PLUS OR MINUS 80 KEV, SIGNIFICANTLY EXCEEDED THE PREVIOUSLY ACCEPTED VALUE OF 4910 KEV, WHICH WAS POSSIBLE BASED ON A FAULTY CALIBRATION, NOW EXTENDED TO 4913 AND 5100 KEV OF PRIME38 CL AND PRIME34 P. IN THE PRIME44 SC (3.9 HR) GAMMA SPECTRUM THE LINES 1157 PLUS OR MINUS 1 (100), 1499 PLUS OR MINUS 1 (0.9), AND 2656 PLUS OR MINUS (0.15) KEV WERE SEEN; IN THE PRIME44 SC (2.4 DAYS) SPECTRUM THE LINES 271 PLUS OR MINUS 1 (100), 1127 PLUS OR MINUS 2 (18.), AND 1000 PLUS OR MINUS 3 (SIMILAR TO 1.8) KEV WERE NOTED. FACILITY: INST. YAD. FIZ. ALMA-ATA. USSR.

UNCLASSIFIED

APPROVED FOR RELEASE: 09/19/2001 CIA-RDP86-00513R002201810006-1"

"APPROVED FOR RELEASE: 09/19/2001 CIA-RDP86-00513R002201810006-1

USSR

UDC: 621.378.325

3

AVDEYEVA, V. I., AL'PEROVICH, M. A., VAN'UKOV, M. F., [redacted], V. I., LEVKOYEV, I. I., SEREBRYAKOV, V. A., STARIKOV, A. D.

"Use of Translucent Liquid and Thin-film Gates in the GOS-1000 Laser"

Moscow, Kvantovaya Elektronika, No 2, 1971, pp 69-73

Abstract: The authors present data on a translucent laser gate based on a thin polymer film to which polymethyne dye has been added, and it is shown that such a film gate can be used along with a liquid gate to obtain high-power monopulse emission in the GOS-1000 laser. It is found that film and liquid gates can be used for Q-switching neodymium glass lasers with a large output beam aperture (45 mm or more). The described gates are fairly simple and can be used in serially produced industrial lasers type GOS-1000, in the analogous type GOS-300 unit and others without any appreciable change in the construction of the device or in the power supply circuit. The highest energy and emission power on the GOS-1000 laser in the monopulse mode (80 J and 2.5 GW) can be attained by using a gate which is a cell filled

1/2

APPROVED FOR RELEASE: 09/19/2001 CIA-RDP86-00513R002201810006-1"

"APPROVED FOR RELEASE: 09/19/2001 CIA-RDP86-00513R002201810006-1

USSR

AVDEYEVA, V. I. et al., Kvantovaya Elektronika, No 2, 1971, pp 69-73

with polymethyne dye solution. The new film gate described in this paper, which is a thin polymer film with polymethyne dye added to the film base, is most simple in use and provides comparatively high emission parameters in the GOS-1000 laser (50 J and 1.5 GW), has no optical components in its design, is suitable for use for long periods (8-10 months), and can be used repeatedly at comparatively low energies in the monopulse (20 J).

2/2

APPROVED FOR RELEASE: 09/19/2001 CIA-RDP86-00513R002201810006-1"

"APPROVED FOR RELEASE: 09/19/2001 CIA-RDP86-00513R002201810006-1

3

USSR UDC 621.373:530.145.6

AVDEYEVA, V. I., AL'PEROVICH, M. A., VANYUKOV, M. P., ISAYENKO, V. I., LEVKOYEV, I. I., SEREBRYAKOV, V. A., STARIKOV, A. D.

"Use of Liquid and Film Transmission Gates in a GOS-1000 Laser"

V sb. Kvant. elektronika (Quantum Electronics--collection of works), No 2, Moscow, 1971, pp 69-73 (from RZh-Radiotekhnika, No 7, Jul 71, Abstract No 7D114)

Translation: Data are presented on a transmission gate based on a thin polymer film into which polymethyne dye is introduced, and on the use of this gate in a GOS-1000 laser as a Q-switch. Four illustrations, bibliography of five titles. Resumé.

1/1

APPROVED FOR RELEASE: 09/19/2001 CIA-RDP86-00513R002201810006-1"

"APPROVED FOR RELEASE: 09/19/2001 CIA-RDP86-00513R002201810006-1

USSR

UDC 615.21:547.824

NIKITSKAYA, Ye. S., LEVKOYEVA, Ye. I., ARTYUNYAN, G. S., VLASOVA, T. F., MASHKOVSKIY, M. D. and YAKHONTOV, L. N., All-Union Scientific Research Chemical-Pharmaceutical Institute imeni S. Ordzhonikidze, Moscow

"The Synthesis and Pharmacological Study of 1-Dialkylaminoalkyl-2,5-Dimethylpiperidole-4-Esters"

Moscow, Khimiko-Farmatsevticheskiy Zhurnal, Vol 7, No 12, Dec 73, pp 3-6

Abstract: Twelve 1-dialkylaminoalkyl-2,5-dimethylpiperidole-4-esters were synthesized from 2,5-dimethylpiperidone by acylation with chloracetic or beta-brompropionic anhydride, reaction with dimethylamine or diethylamine reduction with lithium aluminum hydride, and acylation with acetic, benzoic or 3,4-5-trimethoxybenzoic acid. Water soluble salts were formed with D-tartaric acid for convenience in pharmacological studies. The stereochemistry of the starting material and one of the simplest intermediates was checked by proton magnetic resonance. The compounds showed no analgesic effect on mice or rats. Small doses in narcotized cats gave a small, short-term hypotensive effect, while larger doses were toxic. No cholinolytic action was found in isolated rabbit ears or intestinal sections.
1/1

APPROVED FOR RELEASE: 09/19/2001 CIA-RDP86-00513R002201810006-1"

"APPROVED FOR RELEASE: 09/19/2001 CIA-RDP86-00513R002201810006-1

USSR

UDC 615.31:547.834.4

LEVKOYEVA, YE. I., MIAITSKAYA, YE. S., SHARAPOV, I. M. and YAGHONTOV, L. N.; All-Union Scientific-Research Chemico-Pharmacological Institute imeni S. Ordzhonikidze, Moscow

"Synthesis and Pharmalogical Study of the Polyalkylquinonuclidines"

Moscow, Khimiko-Farmatsevticheskiy Zhurnal, Vol 5, No 9, 1971, pp 16-21

Abstract: The high ganglioblocking and hypotensive activity of hydrobromide 2,2,6,6-tetramethylchinuclidine (recommended in the form of the preparation "Temekhine" for wide medical use by the USSR Ministry of Public Health) prompted research into other polyalkylchinuclidines. Sixteen members of this group were studied by the authors. Basic chemico-physical data were determined, along with some information on toxicity.

1/1

APPROVED FOR RELEASE: 09/19/2001 CIA-RDP86-00513R002201810006-1"

"APPROVED FOR RELEASE: 09/19/2001 CIA-RDP86-00513R002201810006-1

USSR UDC 547.834.4

LEVKOYEVA, YE. L., NIKITSKAYA, YE. S., and YAKHONTOV, L. N., All-Union Scientific Research Pharmaceutical Institute imeni S. Ordzhonikidze, Moscow

"Synthesis and Conversions of 6,6,7,7-Tetramethylquinuclidone-2"

Riga, Khimiya Geterotsiklicheskikh Soyedineniy, Academy of Sciences Latvian SSR, No 3, 1971, pp 378-384

Abstract: A new representative of the quinuclidone-2 series -- 6,6,7,7-tetramethylquinuclidone-2 (I) -- was synthesized from (2,2,6,6-tetramethylpiperidyl-4)acetic acid (II) by converting the latter to its acid chloride and then treating it with triethylamine. I has the following properties: λ_{max} 230 microns (in alcohol), pK_a 6.37 $\pm$ 0.05 (in water, determined potentiometrically), and dipole moment 3.95 D (in benzene). I participates in three types of chemical reactions: 1) in reaction with protonic nucleophilic agents (water, alcohols, amines, hydroxylamine, and hydrazines), the N-CO bond is ruptured and the nucleophilic agents are alkylated. I reacts more readily with nucleophilic reagents than do other amides, ranking between ketones and acid halides. 2) Unusual conversions are observed when the amide of I is treated with nucleophilic agents in aprotic media (phenyllithium in ether, phosphorus

1/2

APPROVED FOR RELEASE: 09/19/2001 CIA-RDP86-00513R002201810006-1"

"APPROVED FOR RELEASE: 09/19/2001 CIA-RDP86-00513R002201810006-1

USSR

LEVKOYEVA, YE. I., et al., Khimiya Geterotsiklicheskikh Soyedineniy, No 3, 1971, pp 378-384

pentachloride in benzene, acetone cyanohydrin, and lithium aluminum hydride in ether). The N-C $(CH_3)_2$ bond is ruptured with the formation of 4-substituted 6,6-dimethylpiperidones-2. 3) When I is treated with electrophilic reagents (hydrogen chloride and methyl iodide) in aprotic solvents, reactions occur with the retention of the quinuclidine ring. This is also true in the reduction reaction of I.

2/2

APPROVED FOR RELEASE: 09/19/2001 CIA-RDP86-00513R002201810006-1"

"APPROVED FOR RELEASE: 09/19/2001 CIA-RDP86-00513R002201810006-1

USSR

UDC 577.4

LEVNER, YE. V.

"A Problem of Calendar Planning Reduced to the Problem of the Shortest Path"

Tr. 4-y Zimn. shkoly po mat. programmir. i smezh. voprosam, 1971. Vyp. 2 (Works of the Fourth Winter School on Mathematical Programming and Adjacent Problems, 1971, Vyp. 2), Moscow, 1971, pp 93-98 (From RZh-Kibernetika, No 7, Jul 72, Abstract No 7V506)

Translation: The problem of constructing the optimal schedule with respect to speed for machining a finite number of parts on several identical machine tools reduces to the problem of the shortest path in a specially constructed network. Each part is machined on only one machine tool. Each machine tool cannot machine more than one part simultaneously. The machining of each part begins with adjustment of the machine tool. The adjustment time does not depend on the type of part, and the adjusting is done by one worker servicing the machine tools.

1/1

APPROVED FOR RELEASE: 09/19/2001 CIA-RDP86-00513R002201810006-1"

"APPROVED FOR RELEASE: 09/19/2001 CIA-RDP86-00513R002201810006-1

USSR UDC 621.382.23.072.2

PAVLENKO, YU.S., SHALYTA, Z.M., SMIRNOV, V.V., LEVCCHKINA, I.YE.

"To The Problem Of The Quality Of The P-N Junctions Of Silicon Stabilitrons Prepared By Epitaxial Build-Up"

Elektron.tekhnika. Nauch.-tekhn.sb. Poluprovodn.pribory (Electronics Technology. Scientific-Technical Collection. Semiconductor Devices), 1971, No 5(62), pp 38-45 (from RZh:Elektronika i yeye primeneniye, No 2, Feb 72, Abstract No 2B95)

Translation: The parameters are considered of epitaxial p-n junctions in a comparison with the calculated values of the parameters of p-n junctions produced by other methods. It is shown that epitaxial build-up assures the lowest values of the dynamic resistance. The spread of the voltage stabilization in the experiments conducted is characterized by the value of the root-mean-square deviation σ = 8.1 percent. It is difficult to decrease this magnitude. A method is presented for production of stabilitrons with a small spread of the voltage stabilization by a series connection of two p-n junctions, the voltage stabilizations of which are specially selected. Under specific conditions the cost of an epitaxial p-n junction can be no higher than with alloy and diffusion-alloy. Summary.

1/1

APPROVED FOR RELEASE: 09/19/2001 CIA-RDP86-00513R002201810006-1"

"APPROVED FOR RELEASE: 09/19/2001 CIA-RDP86-00513R002201810006-1

USSR UDC 911.3:61:001.8(4/9)

FILATOV, V. G., GURBO, G. D., MALYSHEV, V. A., and LEVOSHIN, O. A.

"Research Materials on the Landscape Epidemiology of Several Neighboring Regions in the Urals and Western Siberia"

V sb. Materialy XV Vses. s'ezda epidemiologov, mikrobiologov i infektsionistov, Tezisy Dokl. Ch. 1 (Proceedings of the 15th All Union Congress of Epidemiologists, Microbiologists and Infectious Disease Specialists, Theses Reports, Part 1 -- collection of Works), Moscow, 1970, pp 100-102 (from RZh-Meditsinskaya Geografiya, No 2, Feb 71, Abstract No 2.36.53)

Translation: Natural foci of zooanthroponoses in the Chelyabinsk, Tyumensk, and partially in Sverdlovsk regions are discussed. Tickborne encephalitis, Omsk hemorrhagic fever, rabies, North Asian tickborne scrub typhus Q-fever, tularemia, leptospirosis, toxoplasmosis, and helminthosis are included. The problem of a detailed regional, epidemiological classification of the territory under consideration is discussed.

1/1

APPROVED FOR RELEASE: 09/19/2001 CIA-RDP86-00513R002201810006-1"

"APPROVED FOR RELEASE: 09/19/2001 CIA-RDP86-00513R002201810006-1

Hydraulic and Pneumatic

USSR

LEVSH, I. P., HIYAZOV, M. I., UBAYDULLAEV, A. K., MISHINA, V. N., MUKHITDINOV, KH. KH.

"Mass Transfer and Hydrodynamics in 3-phase Fluidized Bed Using Various Fillers"

Gidrodinamika, Teplo- i Massoobmin v Psevdoozhizh. Sloye [Hydrodynamics, Heat and Mass Transfer in Fluidized Bed], Ivanovo, 1971, pp 202-207. (Translated from Referativnyy Zhurnal Mekhanika, No 1, 1972, Abstract No 1B1121, by V. A. Kernerman).

Translation: Studies involving fluidization of sprinkled packing (plastic rings, hollow balls and cubes) in three gas-liquid systems on grid plates and overflow plates in apparatus 145 to 300 m in diameter have shown that in the initial period of fluidization of the filler in the 3-phase layer, 10-15 times greater phase contact surface is created than in a bubbling layer without filler. Movement of the filler and pulsating fluid drain through the holes in the plates facilitate intensive renewal of the phase contact surface and increased mass transfer rates. Data are presented on the influence of gas flow rate and sprinkling density on bad resistance and dynamic layer height, as well as the observed values of mass transfer coefficients and the contact surface between phases calculated according to the method suggested. 13 biblio refs.

1/1

APPROVED FOR RELEASE: 09/19/2001 CIA-RDP86-00513R002201810006-1"

"APPROVED FOR RELEASE: 09/19/2001 CIA-RDP86-00513R002201810006-1

1/2 030 UNCLASSIFIED PROCESSING DATE--30OCT70

TITLE--DESORPTION OF CARBON DIOXIDE FROM MONOETHANOLAMINE SOLUTIONS IN A COLUMN PACKED WITH POLYPROPYLENE RINGS -U-

AUTHOR-(03)-MUKHITDINOV, KH.KH., LEVSH, I.P., ABDURASHIDOV, T.R.

COUNTRY OF INFO--USSR

SOURCE--UZB. KHIM. ZH. 1970, 14(2), 81-3

DATE PUBLISHED--------70

SUBJECT AREAS--CHEMISTRY

TOPIC TAGS--DESORPTION, CARBON DIOXIDE, MONOETHANOLAMINE, POLYPROPYLENE, FLUID FLOW

CONTROL MARKING--NO RESTRICTIONS

DOCUMENT CLASS--UNCLASSIFIED

PROXY REEL/FRAME--2000/1609 STEP NO--UR/0291/70/014/002/0081/0083

CIRC ACCESSION NO--AP0125231

UNCLASSIFIED

APPROVED FOR RELEASE: 09/19/2001 CIA-RDP86-00513R002201810006-1"

"APPROVED FOR RELEASE: 09/19/2001 CIA-RDP86-00513R002201810006-1

2/2 030 UNCLASSIFIED PROCESSING DATE--30OCT70

CIRC ACCESSION NO--AP0125231

ABSTRACT/EXTRACT--(U) GP-0- ABSTRACT. THE REPACEMENT OF CERAMIC (A) PACKINGS WITH MORE STABLE POLYPROPYLENE (B) RING PACKINGS WAS INVESTIGATED IN THE DESORPTION OF CO SUB2 FROM MONOETHANOLAMINE (I) SOLNS. DESORPTION EFFICIENCES ARE COMPARED FOR DIFFERENT SIZE A AND B PACKINGS DETD. AT LIQ. FLOW RATES OF 5-40 M PRIME3-M PRIME2 HR ON SOLNS. CONTG. 60-70 G CO SUB2-L. HIGHEST DESORPTION (59PERCENT) EFFICIENCIES WERE OBTAINED ON 15 TIMES 15 TIMES 2 MM A AND B RINGS AT 116 AND 118DEGREES, RESP. CO SUB2 DESORPTION IN A GIVEN COLUMN WAS DOUBLED AT HIGH LIQ. FLOW RATES BY FLOATING (FLUIDIZING) THE B RINGS IN I WITH A VAPORGAS MIXT. THE HYDRODYNAMICS OF THE FLOATING RINGS WERE POOR AND THEREFORE NOT SUITABLE FOR SUCH AN OPERATION. FACILITY: TASHKENT. POLITEKH. INST., TASHKENT, USSR.

UNCLASSIFIED

APPROVED FOR RELEASE: 09/19/2001 CIA-RDP86-00513R002201810006-1"

"APPROVED FOR RELEASE: 09/19/2001 CIA-RDP86-00513R002201810006-1

1/2 019 UNCLASSIFIED PROCESSING DATE--18SEP70

TITLE--LOCAL RESISTANCES DURING THE FLOW OF SPINNING SOLUTIONS -U-

AUTHOR-(02)-LEVSH, V.I., GELLER, B.E.

COUNTRY OF INFO--USSR

SOURCE--KHIM. VOLOKNA 1970, (1), 17-18

DATE PUBLISHED--------70

SUBJECT AREAS--MATERIALS

TOPIC TAGS--TEXTILE ENGINEERING, CELLULOSE RESIN, FLOW RATE, SODIUM HYDROXIDE, POLYVINYL ALCOHOL

CONTROL MARKING--NO RESTRICTIONS

DOCUMENT CLASS--UNCLASSIFIED

PROXY REEL/FRAME--1984/1819 STEP NO--UR/0183/70/000/001/0017/0018

CIRC ACCESSION NO--AP0100393

UNCLASSIFIED

APPROVED FOR RELEASE: 09/19/2001 CIA-RDP86-00513R002201810006-1"

"APPROVED FOR RELEASE: 09/19/2001 CIA-RDP86-00513R002201810006-1

2/2 019 UNCLASSIFIED PROCESSING DATE--18SEP70

CIRC ACCESSION NO--AP0100393

ABSTRACT/EXTRACT--(U) GP-0- ABSTRACT. THE LAMINAR FLOW OF 7PERCENT CH CELLULOSE SOLN. IN 6PERCENT NAOH, 18.5PERCENT AQ. POLY(VINYL ALC.), AND VISCOSE SOLNS. WAS STUDIED AT THE INLET OF A TUBE, AS WELL AS DURING SUDDEN FLUX EXPANSION AND CONTRACTION. THE PRESSURE GRADIENT IN THE TUBE WAS DEPENDENT ON THE FLOW RATE OF THE POLYMER SOLNS. AND THEIR PHYSICOCHEM. PROPERTIES. THE MAGNITUDES OF LOCAL RESISTANCES, EXPRESSED IN TERMS OF AN EQUIV. DIAM. FOR ALL OF THE SOLNS. CITED, WERE INDEPENDENT OF FLOW RATE.

UNCLASSIFIED

APPROVED FOR RELEASE: 09/19/2001 CIA-RDP86-00513R002201810006-1"

"APPROVED FOR RELEASE: 09/19/2001 CIA-RDP86-00513R002201810006-1

1/3 016 UNCLASSIFIED PROCESSING DATE--27NOV70

TITLE--BRONCHOLOGICAL INVESTIGATIONS UNDER NARCOSIS -U-

AUTHOR-(03)-BODAREV, V.KH., DEVYATERIKOV, A.I., LEVSHANKOV, A.I.

COUNTRY OF INFO--USSR

SOURCE--VOYENNO-MEDITSINSKIY ZHURNAL, NO 3, 1970, PP 45-49

DATE PUBLISHED--------70

SUBJECT AREAS--BIOLOGICAL AND MEDICAL SCIENCES

TOPIC TAGS--RESPIRATORY SYSTEM DISEASE, TUBERCULOSIS, THORACIC SURGERY, MEDICAL EXAMINATION

CONTROL MARKING--NO RESTRICTIONS

DOCUMENT CLASS--UNCLASSIFIED

PROXY REEL/FRAME--3006/0675 STEP NO--UR/0177/70/000/003/0045/0049

CIRC ACCESSION NO--AP0134424

UNCLASSIFIED

APPROVED FOR RELEASE: 09/19/2001 CIA-RDP86-00513R002201810006-1"

"APPROVED FOR RELEASE: 09/19/2001 CIA-RDP86-00513R002201810006-1

2/3 016 UNCLASSIFIED PROCESSING DATE--27NOV70

CIRC ACCESSION NO--AP0134424

ABSTRACT/EXTRACT--(U) GP-0- ABSTRACT. THE SIDE APPLICATION OF BRONCHOLOGICAL INVESTIGATIONS IN DISEASES OF THE LUNGS, AND ESPECIALLY IN TUBERCULOSIS, BECAME POSSIBLE THANKS TO THE WORK OF A. N. VOZNESENSKIY, A. A. LAPINA, G. I. LUKOMSKIY, V. V. PUCHKOV, L. YE. REBANE, V. F. UNDRITS, A. ALTYPARMAKOV AND MANY OTHERS. THE DEVELOPMENT OF THORACIC SURGERY, THE IMPROVEMENT OF THE APPARATUS AND INSTRUMENTATION, ANESTHESIA AND PROCEDURES OF BRONCHOLOGICAL INVESTIGATIONS, AND ALOS THE APPLICATION OF NEW CONTRAST SUBSTANCES ON A BACKGROUND OF EFFECTIVE ANTIBACTERIAL TREATMENT WITH MODERN ANTIBIOTICS AND CHEMICALS HAVE MADE THOSE INVESTIGATIONS PRACTICALLY WITHOUT DANGER. IN A NUMBER OF PULMONARY DISEASES BRONCHOSCOPY HAS BECOME OBLIGATORY. EXAMINATION OF THE TRACHEA AND LARGE BRONCHI, SONDING OF THE SEGMENTARY AND SUBSEGMENTARY BRONCHI, ASPIRATION OF THEIR CONTENTS TO DETERMINE THE MICROFLORA AND STUDY OF THE CELLULAR COMPOSITION (CATHETERBIOPSY), AND SELECTIVE CONTRASTING OF THE BRONCHI, ALL THESE MEASURES PERMIT CONSIDERABLY FACILITATING AND ACCELERATING DIFFERENTIAL DIAGNOSIS, WHICH IS ESPECIALLY IMPORTANT FOR THE RECOGNITION OF TUMEROUS AND SUPPURATIVE PROCESSES, TUBERCULOSIS, AND FUNGOUS AFFECTIONS (V. P. FILIPPOV, YE. D. TIMASHEVA, F. A. ASTRAKHANTSEV, AND OTHERS. WE HAVE AT OUR DISPOSAL DATA ON THE BRONCHOLOGICAL INVESTIGATIONS OF A LARGE GROUP OF PATIENTS. THEY WERE CONDUCTED BY US AS AN INHERENT ELEMENT OF PRE OPERATIVE EXAMINATION AND ALSO IN ALL FORMS OF PULMONARY TUBERCULOSIS WITH DEGENERATION OR SUSPICION OF TUBERCULOSIS OF THE BRONCHI, AND IN THE DIFFERENTIAL DIAGNOSIS OF VARIOUS PULMONARY DISEASES.

UNCLASSIFIED

APPROVED FOR RELEASE: 09/19/2001 CIA-RDP86-00513R002201810006-1"

"APPROVED FOR RELEASE: 09/19/2001 CIA-RDP86-00513R002201810006-1

3/3 016 UNCLASSIFIED PROCESSING DATE--27NOV70

CIRC ACCESSION NO--AP0134424

ABSTRACT/EXTRACT--IN THE PRESENT REPORT WE WILL DEAL ONLY WITH INVESTIGATIONS CONDUCTED IN PREPARATION FOR LUNG RESECTION.

UNCLASSIFIED

APPROVED FOR RELEASE: 09/19/2001 CIA-RDP86-00513R002201810006-1"

"APPROVED FOR RELEASE: 09/19/2001 CIA-RDP86-00513R002201810006-1

USSR

UDC 577.1:615.7/9

LEVSHIN, B. I.

"New Hepatotropic Substances from Selenium Preparations"

V sb. Aktual'n. probl. farmakol. i farmatsii (Timely Problems in Pharmacology and Pharmacy -- collection of works), Moscow, 1971, pp 90-97 (from RZh-Biologicheskaya Khimiya, No 14, Jul 71, Abstract No 14 F1633)

Translation: Toxic hepatitis was induced in rats and rabbits by injecting them with CCl_4 (subcutaneously, 4 and 0.4 mg/kg, respectively). Starting with day 2, the animals were poisoned daily with selenophen-5 or selenophen-6 (2 mg/kg), sodium selenite (10 γ/kg), vitamin B_{12} (50 γ/ka), and hydrocortisone (1.25 mg/kg). The selenium preparations were found to be more hepatotropic than vitamin B_{12} or hydrocortisone (normalization of content of β-lipoproteins and alanine-aminotransferases and albumin-globulin ratio).

1/1

APPROVED FOR RELEASE: 09/19/2001 CIA-RDP86-00513R002201810006-1"

"APPROVED FOR RELEASE: 09/19/2001 CIA-RDP86-00513R002201810006-1

USSR UDC 621.317:621.396.4

LEVSHIN, I. P.

"Measuring the Characteristics of a Multiple Wave Channel"

Radioelektronika v nar. kh-ve SSSR. Ch.1 -- V sb.(Radio Electronics in the National Economy of the USSR. Part I -- collection of works), Kuybyshev, 1970, pp 166-177 (from RZh-Radiotekhnika, No 4, Apr 71, Abstract 4A316)

Translation: The problem of effective variation of the characteristics of a fluctuating channel, in particular, the transmission function, in the presence of noise is very important for adaptive systems. This problem is studied as applied to the class of so-called multiple wave channels. Under defined conditions this problem can be reduced to the analogous problem for a channel which is invariant in time. For the latter, the required measurement can be taken by means of a delay line with sufficiently frequently placed leads on each of which the mutual correlation function between the received and "standard" signals is measured. One significant deficiency of this procedure is noted, and a new procedure and the possibilities of implementing it are discussed. There are 3 illustrations and a 4-entry bibliography.

1/1

APPROVED FOR RELEASE: 09/19/2001 CIA-RDP86-00513R002201810006-1"

"APPROVED FOR RELEASE: 09/19/2001 CIA-RDP86-00513R002201810006-1

1/2 016 UNCLASSIFIED PROCESSING DATE--04DEC70

TITLE--LUMINESCENT AGGREGATES OF RHODAMINE DYES -U-

AUTHOR-(02)-LEVSHIN, L.V., NIZAMOV, N.

COUNTRY OF INFO--USSR

SOURCE--IZV. AKAD. NAUK SSSR, SER. FIZ. 1970, 34(3), 599-603

DATE PUBLISHED-------70

SUBJECT AREAS--MATERIALS

TOPIC TAGS--LUMINESCENCE SPECTRUM, DYE, HETEROCYCLIC SULFUR COMPOUND, AMINE, SOLVENT EXTRACTION

CONTROL MARKING--NO RESTRICTIONS

DOCUMENT CLASS--UNCLASSIFIED

PROXY REEL/FRAME--3008/0996 STEP NO--UR/0048/70/034/003/0599/0603

CIRC ACCESSION NO--AP0138024

UNCLASSIFIED

APPROVED FOR RELEASE: 09/19/2001 CIA-RDP86-00513R002201810006-1"

"APPROVED FOR RELEASE: 09/19/2001 CIA-RDP86-00513R002201810006-1

2/2 016 UNCLASSIFIED PROCESSING DATE--04DEC70

CIRC ACCESSION NO--AP0138024

ABSTRACT/EXTRACT--(U) GP-0- ABSTRACT. THE CONDITIONS OF FORMATION OF LUMINESCENT AGGREGATES OF RHODAMINES G, 6G, 3B, S, AND BUTYL RHODAMINE S AT ROOM TEMP. WERE STUDIED. THE AQ. DYE SOLNS. WERE EXTD. WITH CCL SUB4 IN THE COLORLESS FORM WHICH GAVE ON LIGHT IRRADN. COLORED FORMS, WHOSE SPECTRA WERE VERY LIKE THE CORRESPONDING FILM SPECTRA. THE LUMINESCENE OF THE EXT. SHOWED 2 MAX., ONE CORRESPONDING TO THE MAX. OF AQ. LUMINESCENCE SPECTRA. THE RESULTS WERE EXPLAINED BY THE SCHEME (SHOWN ON MICROFICHE). THE EFFECTS OF DYE CONCN. AND SOLVENT COMPN. WERE STUDIED IN CHCL SUB3-CCL SUB4 MIXTS. THE NATURE OF INTERACTIONS BETWEEN DYE MOLS. IN AGGREGATES IS DISCUSSED AND THE ROLE OF RESONANCE ENERGY POINTED OUT. FACILITY: FIZ. FAK., MOSK. GOS. UNIV. IM. LOMONOSOVA, MOSCOW, USSR.

UNCLASSIFIED

APPROVED FOR RELEASE: 09/19/2001 CIA-RDP86-00513R002201810006-1"

"APPROVED FOR RELEASE: 09/19/2001 CIA-RDP86-00513R002201810006-1

USSR UDC 681.327

LEVSHIN, V.I., MAKSAKOV, Yu.N.

"~~A Memory~~ Device"

USSR Author's Certificate No. 253143, Filed 3/06/68, Published 4/05/70 (Translated from Referativnyy Zhurnal Avtomatika, Telemekhanika i Vychislitel'naya Tekhnika, No. 4, 1971, Abstract No. 4B287P by GV)

Translation: Memory units with linear retrieval containing matrices of memory elements made of two cores through which number and clear busses are passed and to which read and write pulse shapers are connected are well known. These devices are not suitable for performance of the bit-by-bit logic operations of disjunction and conjunction. In the device described this shortcoming is eliminated by the fact that it contains an additional read pulse shaper, the output of which is connected to a bus passing through all cores on the three number lines. Two lines are used to write the initial operands, while the third is used to write the symbol of the logic operation being performed: a "1" for the operation of disjunction and a "0" for the operation of conjunction. This expands the logic capabilities of the device. 1 fig.

1/1

APPROVED FOR RELEASE: 09/19/2001 CIA-RDP86-00513R002201810006-1"

"APPROVED FOR RELEASE: 09/19/2001 CIA-RDP86-00513R002201810006-1

1/2 028 UNCLASSIFIED PROCESSING DATE--04DEC70

TITLE--EFFECT OF AN EXCESS OF ZINC AND SULFUR ON THE EDGE RADIATION OF ACTIVATOR FREE ZINC SULFIDE PHOSPHORS -U-

AUTHOR-(04)-LEVSHIN, V.L., ARAPOVA, E.YA., VORONOV, YU.V., TIMOFEYEV, YU.P.

COUNTRY OF INFO--USSR

SOURCE--ZH. PRIKL. SPEKTROSK. 1970, 12(4), 674-81

DATE PUBLISHED--------70

SUBJECT AREAS--CHEMISTRY, PHYSICS

TOPIC TAGS--UV RADIATION, ZINC, SULFUR, LUMINESCENCE, ZINC SULFIDE, ELECTRON BEAM EXCITATION

CONTROL MARKING--NO RESTRICTIONS

DOCUMENT CLASS--UNCLASSIFIED

PROXY REEL/FRAME--3006/1450 STEP NO--UR/0368/70/012/004/0674/0681

CIRC ACCESSION NO--AP0135121

UNCLASSIFIED

APPROVED FOR RELEASE: 09/19/2001 CIA-RDP86-00513R002201810006-1"

"APPROVED FOR RELEASE: 09/19/2001 CIA-RDP86-00513R002201810006-1

2/2 028 UNCLASSIFIED PROCESSING DATE--04DEC70

CIRC ACCESSION NO--AP0135121

ABSTRACT/EXTRACT--(U) GP-0- ABSTRACT. ZNS PHOSPHORS, WITH AN EXCESS OF ZN OR S, WERE PREPD. BY A PREVIOUSLY DESCRIBED METHOD (. ET AL. 1966) AND THEIR SPECTRA WERE RECORDED PHOTOELEC. WITH THE AID OF A QUARTZ MONOCHROMATOR AND A PHOTOMULTIPLIER, AFTER EXCITATION BY AN ELECTRON BEAM AND BY MONOCHROMATIC UV LIGHT AT 313 NM. THE EXCESS ZN AND S HAVE A QUENCHING EFFECT ON THE "EDGE" LUMINESCENCE. HENCE, THEY CANNOT ACT AS UV LUMINESCENCE CENTERS.

UNCLASSIFIED

APPROVED FOR RELEASE: 09/19/2001 CIA-RDP86-00513R002201810006-1"

"APPROVED FOR RELEASE: 09/19/2001 CIA-RDP86-00513R002201810006-1

1/2 015 UNCLASSIFIED PROCESSING DATE--30OCT70

TITLE--LUMINESCENCE AS A PHENOMENON AND AS A SCIENCE -U-

AUTHOR--LEVSHIN, V.L.

COUNTRY OF INFO--USSR

SOURCE--IZV. AKAD. NAUK SSSR, SER. FIZ. 1970, 34(3), 476-82

DATE PUBLISHED--------70

SUBJECT AREAS--PHYSICS

TOPIC TAGS--LUMINESCENCE, CRYSTAL PHOSPOR

CONTROL MARKING--NO RESTRICTIONS

DOCUMENT CLASS--UNCLASSIFIED

PROXY REEL/FRAME--2000/1213 STEP NO--UR/0048/70/034/003/0476/0482

CIRC ACCESSION NO--AP0124867

UNCLASSIFIED

APPROVED FOR RELEASE: 09/19/2001 CIA-RDP86-00513R002201810006-1"

"APPROVED FOR RELEASE: 09/19/2001 CIA-RDP86-00513R002201810006-1

2/2 015 UNCLASSIFIED PROCESSING DATE--30OCT70

CIRC ACCESSION NO--AP0124867

ABSTRACT/EXTRACT--(U) GP-0- ABSTRACT. THE EVOLUTION OF THE DEFINITIONS OF LUMINESCENCE, THE DETAILED ANAL. OF THESE DEFINITIONS, AND THEIR INADEQUACIES, ARE REVIEWED. THE TERM LUMINESCENCE IS COMMONLY USED FOR DENOTING (1) AN ELEMENTARY RADIATION PROCESS, (2) A COMPLEX CHAIN OF PROCESSES INCLUDING RADIATION FROM A DISCRETE CENTER AS THE TERMINATING STEP, AND (3) A SCIENCE TREATING THEORETICAL AND EXPTL. DATA ON LUMINESCENCE, TECHNIQUES FOR EXPTL. STUDYING LUMINESCENT PROPERTIES, AND NUMEROUS APPLICATIONS OF PHOSPHORS. 11 REFS.

UNCLASSIFIED

APPROVED FOR RELEASE: 09/19/2001 CIA-RDP86-00513R002201810006-1"

"APPROVED FOR RELEASE: 09/19/2001 CIA-RDP86-00513R002201810006-1

1/2 026 UNCLASSIFIED PROCESSING DATE--23OCT70

TITLE--RECOVERY CYCLES OF MASS EVOKED RESPONSES AT VARIOUS LEVELS OF THE VISUAL SYSTEM TO ELECTRICAL STIMULATION OF THE OPTIC NERVE -U-

AUTHOR-(02)-SHEVELEV, I.A., LEVSHINA, I.P.

COUNTRY OF INFO--USSR

SOURCE--NEYROFIZIOLOGIYA, 1970, VOL 2, NR 3, PP 251-259

DATE PUBLISHED--------70

SUBJECT AREAS--BIOLOGICAL AND MEDICAL SCIENCES

TOPIC TAGS--VISUAL PERCEPTION, ELECTROPHYSIOLOGY, BIOPOTENTIAL, BRAIN

CONTROL MARKING--NO RESTRICTIONS

DOCUMENT CLASS--UNCLASSIFIED

PROXY REEL/FRAME--1998/0392 STEP NO--UR/0660/70/002/003/0251/0259

CIRC ACCESSION NO--AP0121076

UNCLASSIFIED

APPROVED FOR RELEASE: 09/19/2001 CIA-RDP86-00513R002201810006-1"

"APPROVED FOR RELEASE: 09/19/2001 CIA-RDP86-00513R002201810006-1

2/2 026 UNCLASSIFIED PROCESSING DATE--23OCT70

CIRC ACCESSION NO--AP0121076

ABSTRACT/EXTRACT--(U) GP-0- ABSTRACT. IN CATS UNDER AMITHAL ANAESTHESIA RECOVERY CYCLES WERE STUDIED OF MASS EVOKED POTENTIALS OF THE OPTIC TRACT, LATERAL GENICULATE BODY, VISUAL RADIATION AND PRIMARY PROJECTION AREA OF THE VISUAL CORTEX TO THE ELECTRICAL STIMULATION OF THE OPTIC NERVE (IN SOME EXPERIMENTS THE VISUAL RADIATION) WITH PAIRED ELECTICAL STIMULI OF ABOVE THRESHOLD INTENSITY. THE RECOVERY OF THE AMPLITUDE AND TEMPORAL CHARACTERISTICS OF ALL THE COMPONENTS OF EVOKED POTENTIALS WAS STUDIED. SIMULTANEOUS RECORDS OF RESPONSES IN ALL PARTS OF THE VISUAL SYSTEM (EXCEPT THE RETINA) ALLOW US TO COMPARE UNDER IDENTICAL CONDITIONS THE CHANGES IN THEIR REACTIVITY AFTER THE FIRST STIMULUS. IT WAS SHOWN THAT AT THE UPPER LEVELS OF THE VISUAL SYSTEM THE EXALTATION PHASE OF THE RECOVERY CYCLE AND THE DEPRESSIVE ONE FOLLOWING AFTER IT BECOME MORE AND MORE PRONOUNCED AND PROTRACTED. DEPRESSION IS MOSTLY PRONOUNCED IN THE VISUAL CORTEX AND FOR THE LATE COMPONENTS OF THE EVOKED RESPONSE. THE DATA SUGGEST, THAT UNDER SUCH EXPERIMENTAL CONDITIONS THE PROCESSES OF SUCCESIVE INHIBITION IN THE CORTEX ARE MORE PRONOUNCED THEN IN THE LOWER PARTS OF THE SYSTEM. THERE ARE GROUNDS TO BELIEVE THAT THE DEPRESSIVE EFFECT IN THE CORTEX IS PARTLY CONNECTED WITH THE PRE AND PARTLY WITH THE POST SYNAPTIC INHIBITION.

FACILITY: THE INSTITUTE OF HIGHER NERVOUS ACTIVITY AND NEUROPHYSIOLOGY, ACADEMY OF SCIENCES, USSR.

UNCLASSIFIED

APPROVED FOR RELEASE: 09/19/2001 CIA-RDP86-00513R002201810006-1"

"APPROVED FOR RELEASE: 09/19/2001 CIA-RDP86-00513R002201810006-1

1/2 014 UNCLASSIFIED PROCESSING DATE--13NOV70

TITLE--SIMPLIFIED DETERMINATION OF CUMENE HYDROPEROXIDE -U-

AUTHOR-(03)-LEVSHTEYN, V.A., SLAVKINA, N.G., PANINA, K.V.

COUNTRY OF INFO--USSR

SOURCE--NEFTEPERERAB. NEFTEKHIM. (MOSCOW) 1970, (5), 47-8

DATE PUBLISHED--------70

SUBJECT AREAS--CHEMISTRY

TOPIC TAGS--CUMENE, HYDROPEROXIDE, THERMAL ANALYSIS, PHENOL, ACETONE, THERMOMETRY

CONTROL MARKING--NO RESTRICTIONS

DOCUMENT CLASS--UNCLASSIFIED

PROXY REEL/FRAME--3006/1087 STEP NO--UR/0318/70/000/005/0047/0048

CIRC ACCESSION NO--AP0134776

UNCLASSIFIED

APPROVED FOR RELEASE: 09/19/2001 CIA-RDP86-00513R002201810006-1"