"APPROVED FOR RELEASE: 09/01/2001 CIA-RDP86-00513R002202010002-2

USSR

MASTRYUKOVA, T. A., et al., Zhurnal Obshchey Khimii, Sep 71, Vol 41, No 9, pp 1938-1941

the acids. In the present case alcohols appear to have the highest differentiating action on the strength of dithiophosphoric acid. The difference between the strength of dithiophosphoric acids in alcohol and that in aqueous alcohol is close to 2.5 orders of magnitude.

2/2

APPROVED FOR RELEASE: 09/01/2001 CIA-RDP86-00513R002202010002-2"

"APPROVED FOR RELEASE: 09/01/2001 CIA-RDP86-00513R002202010002-2

USSR UDC 542.91:547.1'118

MASTRYUKOVA, T. A., LAZAREVA, M. V., and PEREKALIN, V. V., Institute of Heteroorganic Compounds, Academy of Sciences USSR, and Leningrad State Pedagogical Institute imeni A. I. Gertsen

"Synthesis of Nitro- and Aminoalkylphosphonates"

Moscow, Izvestiya Akademii Nauk SSSR, Seriya Khimicheskaya, No 5, May 72, pp 1164-1168

Abstract: There are two promising methods for the synthesis of organonitrophosphorus compounds, viz. the addition of nitroalkanes to organophosphorus compounds with multiple bonds or the addition of organophosphorus compounds to nitroolefins. The authors used the second method, introducing nitroisoamylene, nitropropylene and ω-nitrostyrene into reaction with dialkyl phosphites and thiophosphites to obtain O,O-dialkyl 1-phenyl-2-nitroethylphosphonates. Catalytic reduction of the resultant nitroalkylphosphonates with hydrogen over Raney nickel gave the corresponding aminoalkylphosphonates. Free 1-alkyl-2-aminoalkylphosphonic acids are obtained by hydrolysis of the esters with hydrochloric acid.

1/1

APPROVED FOR RELEASE: 09/01/2001 CIA-RDP86-00513R002202010002-2"

"APPROVED FOR RELEASE: 09/01/2001 CIA-RDP86-00513R002202010002-2

USSR

UDC 542.91:547.1'118

MASTRYUKOVA, T. A., SUYERBAYEV, KH. A., and KABACHNIK, M. I., Institute of Heteroorganic Compounds, Academy of Sciences USSR

"Synthesis of Methyldiphenyl-β-keto-γ-diphenylphosphinylpropylphosphonium Salts"

Moscow, Izvestiya Akademii Nauk SSSR, Seriya Khimicheskaya, No 5, May 72, pp 1216-1217

Abstract: The article describes the synthesis of methyldiphenyl-β-keto-γ-diphenylphosphonylpropylphosphonium chloride, from which the borofluoride, perchlorate and tetraphenylborate are obtained by exchange reactions. The corresponding phosphorane is obtained by the action of aqueous Na_2CO_3 on the chloride, borofluoride or perchlorate. Phosphonium acetate and trifluoroacetate are obtained from the phosphorane by the addition of trifluoroacetic and acetic acids.

1/1

APPROVED FOR RELEASE: 09/01/2001 CIA-RDP86-00513R002202010002-2"

"APPROVED FOR RELEASE: 09/01/2001 CIA-RDP86-00513R002202010002-2

USSR UDC 547.26'118

MASTRYUKOVA, ~~V.~~ A., SAKHAROVA, T. B., and KABACHNIK, M. I., Institute of Heteroorganic Compounds, Academy of Sciences USSR

"Benzoylation of Ammonium Diethyl Thiophosphate"

Leningrad, Zhurnal Obshchey Khimii, Vol 41, No 1, Jan 71, p 239

Abstract: V. G. PESIN and I. G. VITENBERG previously reported the S-benzoylation of ammonium diethyl thiophosphate with benzoyl- and p-nitrobenzoyl chlorides. This contradicted an earlier finding by the authors of the present article concerning O-acetylation of ambident dialkyl thiophosphate anions. The authors carefully studied the structure of the substances obtained by PESIN and found them to be O-benzoyl derivatives.

1/1

APPROVED FOR RELEASE: 09/01/2001 CIA-RDP86-00513R002202010002-2"

"APPROVED FOR RELEASE: 09/01/2001 CIA-RDP86-00513R002202010002-2

UDC 542.91:661.718.1

USSR

MASTRYUKOVA, T. A., LAZAREVA, M. V., and PEREKALIN, V. V., Institute of Organoelemental Compounds, Academy of Sciences USSR, and Leningrad State Pedagogical Institute imeni A. I. Gertsen

"New Synthesis of γ-Aminopropylphosphonic Acid"

Moscow, Izvestiya Akademii Nauk SSSR, Seriya Khimicheskaya, No 6, Jun 71, pp 1353-1354

Abstract: The authors report the synthesis of γ-aminopropylphosphonic acid by hydrolysis of 0,0-diethyl- γ-aminopropyl phosphonate, obtained by condensation of 0,0-diethylvinyl phosphonate with nitromethane in the presence of sodium ethylate with subsequent reduction.

1/1

APPROVED FOR RELEASE: 09/01/2001 CIA-RDP86-00513R002202010002-2"

"APPROVED FOR RELEASE: 09/01/2001 CIA-RDP86-00513R002202010002-2

USSR UDC: 632.95

KABACHNIK, M. I., MASTRYUKOVA, T. A., SHIPOV, A. E., ANDREANOVA, L. V., VARSHAVSKIY, S. L., and KOPMAN, L. P.

"A Method for Preparing N-Acyl-S-(o-Alkylmethylthiophosphonyl) Cysteine Ester Derivatives"

USSR Author's Certificate No 253063, filed 18 July 68, published 3 Apr 70 (from RZh-Khimiya, No 22, 25 Nov 70, Abstract No 22 N650 P by G. V. Kusnetsova)

Translation: The indicated substances with the general formula $ROPMe(S)SCH_2$-$CH(NH-COR')COOR''$ (I) (R, R' and R'' = alkyls) are obtained from the reaction of $ROPMe(S)Cl$ with $HSCH_2CH(NHCOR')COOR''$ in an organic solvent medium in the presence of an HCL acceptor. A solution of 1,7 g of iso-$PrOPMe(S)Cl$ in 10 ml of absolute C_6H_6 is added to a solution of 2 g of $HSCH_2CH(NHAc)COOEt$ and 1,1 g of Et_3N in 50 ml of absolute C_6H_6 in an inert gas atmosphere while being mixed. The mixture is stirred for 1 hour at 20-5° and then at 50-5°. The precipitated Et_3N hydrochloride is filtered off and the filtrate washed with cold 2% Na_2CO_3 solution and water. The solution is evaporated and by chromatography on SiO_2 (hexane-acetone 3:2) 1.38 g (42.2%) of I (R=iso-Pr, R'=Me,

1/2

APPROVED FOR RELEASE: 09/01/2001 CIA-RDP86-00513R002202010002-2"

"APPROVED FOR RELEASE: 09/01/2001 CIA-RDP86-00513R002202010002-2

USSR

KABACHNIK, M. I., et al, USSR Author's Certificate No 253063, Filed 18 July 68, published 3 Apr 70 (from RZh-Khimiya, No 22, 25 Nov 70, Abstract No 22 N650 P by G. V. Kusnetsova)

R"=Et), $C_{11}H_{22}NO_4PS_2$, is obtained. The next I (R'=Me; R, R", yield in %, d_4^{20}, and $n^{20}D$ are given) is prepared in a similar fashion: Me, Me, 42.6, 1.2446, 1.5296; Me, Et, 48.7, 1.2068, 1.5210; Me, iso-Pr, 66.8, 1.1694, 1.5108; Et, Me, 40.5, 1.2041, 1.5152; Et, Et, 51.5, 1.1780, 1.5138; Et, iso--Pr, 23.5, 1.1608, 1.5082; Pr, Me, 54.4, 1.1948, 1.5151; Pr, Et, 38.3, 1.1477, 1.5050; Pr, Pr, 45.2, 1.1497, 1.5140; Pr, iso-Pr, 1.1490, 1.5069; iso-Pr, Me, 45, 1.1560, 1.5029; and iso-Pr, iso-Pr, 22.5, 1.1506, 1.4990. I can be used as physiologically active substances and as intermediate products in organic synthesis.

2/2

APPROVED FOR RELEASE: 09/01/2001 CIA-RDP86-00513R002202010002-2"

"APPROVED FOR RELEASE: 09/01/2001 CIA-RDP86-00513R002202010002-2

1/2 009 UNCLASSIFIED PROCESSING DATE--27NOV70

TITLE--FLOTATION PROPERTIES OF PHOSPHORUS COMPOUNDS CONTAINING SULFUR -U-

AUTHOR-(04)-SOLOZHENKIN, P.M., MASTRYUKOVA, T.A., LOSEVA, N.P., TREGUBENKO, N.I.

COUNTRY OF INFO--USSR

SOURCE--DOKL. AKAD. NAUK TADZH. SSR 1970, 13(4), 26-30

DATE PUBLISHED--------70

SUBJECT AREAS--CHEMISTRY

TOPIC TAGS--FLOTATION REAGENT, GALENA, THIOL, BENZENE DERIVATIVE, PHOSPHATE ESTER

CONTROL MARKING--NO RESTRICTIONS

DOCUMENT CLASS--UNCLASSIFIED

PROXY REEL/FRAME--3002/1400 STEP NO--UR/0425/70/013/004/0026/0030

CIRC ACCESSION NO--AT0128799

UNCLASSIFIED

APPROVED FOR RELEASE: 09/01/2001 CIA-RDP86-00513R002202010002-2"

"APPROVED FOR RELEASE: 09/01/2001 CIA-RDP86-00513R002202010002-2

2/2 009 UNCLASSIFIED PROCESSING DATE--27NOV70

CIRC ACCESSION NO--AT0128799

ABSTRACT/EXTRACT--(U) GP-0- ABSTRACT. THE FLOTATION OF GALENA, PYRITE, AND ANTIMONITE WAS STUDIED AS A FUNCTION OF THE CONCN. OF MONO AND DITHIOPHOSPHORIC AND PHOSPHOROUS ACIDS. THE EFFECT OF PH ON THE FLOTATABILITY OF GALENA BY DIETHYL THIOPHOSPHINATE, DIETHYL THOPHOSPHATE, AND DIPHENYL DITHIOPHOSPHINATE OF DIFFERENT CONCNS. WAS ALSO DETD. FACILITY: INST. KHIM., DUSHANBE, USSR.

UNCLASSIFIED

APPROVED FOR RELEASE: 09/01/2001 CIA-RDP86-00513R002202010002-2"

"APPROVED FOR RELEASE: 09/01/2001 CIA-RDP86-00513R002202010002-2

USSR

UDC 547.241

MASTRYUKOVA, T. A., SUYERBAYEV, Kh. A., PETROVSKIY, P. V., MATROSOV, Ye. I., and KABACHNIK, M. I., Institute of Metal Organic Compounds, Acad. Sc., USSR

"Acidity and Tautomerism of β-Ketophosphonium Salts of 3,3,5,5-Tetraphenyl-3,5-diphosphoniumcyclohexanone"

Leningrad, Zhurnal Obshchey Khimii, Vol 42 (104), No 12, Dec 72, pp 2620-2625

Abstract: Synthetic methods have been developed for 3,3,5,5-tetraphenyl-3,5-disphosphoniumcyclohexanone (I) salts. Solutions of 1.52 g tetraphenylmethylenediphosphine and 0.86 g symm-dibromoacetone in 30 ml tetrahydrofuran were slowly added to 90 ml of boiling THF with stirring. A finely crystalline material was obtained and reprecipitated from hexane-ethanol to yield the dibromide of (I), m.p. 230-255°C. To obtain the dichloride of (I), m.p. 264-266, 4.69 g of symm-dichloroacetone in 150 ml acetonitrile was added to 14.19 g tetraphenylmethylenediphosphine in 950 ml acetonitrile, refluxed for 1.5 hr and cooled to precipitate the product. Sodium tetraphenylborate in absolute ethanol added to the dibromide of (I) in absolute ethanol at room temperature with stirring yields the tetraphenylborate of (I), m.p. 182-185°C. To obtain the diperchlorate of (I),

1/2

APPROVED FOR RELEASE: 09/01/2001 CIA-RDP86-00513R002202010002-2"

"APPROVED FOR RELEASE: 09/01/2001 CIA-RDP86-00513R002202010002-2

USSR

MASTRYUKOVA, T. A., et al., Zhurnal Obshchey Khimii, Vol 42 (104), No 12, Dec 72, pp 2620-2625

m.p. 202-204°C, an aqueous solution of sodium perchlorate was added to an aqueous solution of the dichloride of (I). The salts obtained have an enolic structure in the crystalline state; in solutions an enol-ketone equilibrium is established.

2/2

APPROVED FOR RELEASE: 09/01/2001 CIA-RDP86-00513R002202010002-2"

"APPROVED FOR RELEASE: 09/01/2001 CIA-RDP86-00513R002202010002-2

USSR UDC 547.241 + 547.62 + 547.442

MASTRYUKOVA, T. A., ALADZHEVA, I. M., PETROVSKIY, P. V., MATROSOV, YE. I., and KABACHNIK, M. I., Institute of Organometallic Compounds

"Acidity and Tautomerism of beta-Ketophosphonium Salts. Tautomerism of Triphenyl(diacylmethyl)phosphonium Salts"

Leningrad, Zhurnal Obshchey Khimii, Vol 43 (105), No 5, May 73, pp 991-997

Abstract: According to the IR- and NMR-Spectroscopic data the salts of triphenyl(acetylbenzoylmethyl)-, triphenyl(acetylcarboethoxymethyl) and triphenyl(diacetylmethyl)phosphonium exist in the enole form; they are in the trans-enolic orientation with the protons of the hydroxyl groups being involved in intermolecular hydrogen bonding with the anions or the oxygen of the carbonyl groups. Triphenyl(dicarboethoxymethyl)phosphonium chloride exists in the dicarbonyl form.

1/1

APPROVED FOR RELEASE: 09/01/2001 CIA-RDP86-00513R002202010002-2"

"APPROVED FOR RELEASE: 09/01/2001 CIA-RDP86-00513R002202010002-2

USSR UDC 547.558.1

MASTRYUKOVA, T. A., SUYERBAYEV, KH. A., FEDIN, E. I., PETROVSKIY, P. V., MATROSOV, YE. I., and KABACHNIK, M. I., Institute of Metal Organic Compounds, Acad. Sc. USSR

"Diphosphacyclohexadienone"

Leningrad, Zhurnal Obshchey Khimii, Vol 43 (105), No 5, May 73, p 1195

Abstract: 3,3,5,5-Tetraphenyl-3,5-diphosphacyclohexadienone, m.p. 188.5-192°, was synthesized by the reaction of 3,3,5,5-tetraphenyl-3,5-diphosphoniacyclohexanone with triethylamine. On the basis of IR and NMR ^{31}P data it appeared that the new compound exists as diphosphacyclodienone substituted at the phosphorus atom; there were no indications of the existence of diphosphaphenolic structure.

1/1

APPROVED FOR RELEASE: 09/01/2001 CIA-RDP86-00513R002202010002-2"

"APPROVED FOR RELEASE: 09/01/2001 CIA-RDP86-00513R002202010002-2

USSR UDC: 629.12:532

MASTUSHKIN, Yu. M.

"Concerning the Influence of Horizontal Clearance on the Apparent Inertia of a Catamaran"

Tr. Upr. kadrov i ucheb. zavedeniy M-va ryb. kh-va SSSR (Transactions of the Board of Personnel and Educational Institutions of the Ministry of Fisheries of the USSR), 1972, vyp. 38, pp 26-33 (from RZh-Mekhanika, No 9, Sep 72, Abstract No 9B642)

Translation: The paper deals with the problem of the change in the additional masses of a catamaran with a variation of the horizontal clearance for cases where the deformation of the free surface of the liquid can be disregarded. The hulls of the catamaran are approximated by triaxial ellipsoids. The potential of velocities is found by using the approximate method of E. D. Blokh and A. S. Ginevskiy ("Concerning Motion of a System of Bodies in an Ideal Liquid", Scientific and Technical Society of the Shipping Industry, Materials on Exchange of Experimence, vyp. 47, Leningrad, 1963). Approximate formulas are derived for calculating the additional masses of a catamaran and applied to a specific vessel. It is shown

1/2

APPROVED FOR RELEASE: 09/01/2001 CIA-RDP86-00513R002202010002-2"

"APPROVED FOR RELEASE: 09/01/2001 CIA-RDP86-00513R002202010002-2

USSR

MASTUSHKIN, Yu. M., Tr. Upr. kadrov i ucheb. zavedeniy M-va ryb. kh-va SSSR, 1972, vyp. 38, pp 26-33

how the additional masses of the catamaran vary with a change in horizontal clearance. Bibliography of 6 titles. Author's abstract.

2/2

APPROVED FOR RELEASE: 09/01/2001 CIA-RDP86-00513R002202010002-2"

"APPROVED FOR RELEASE: 09/01/2001 CIA-RDP86-00513R002202010002-2

1/2 024 UNCLASSIFIED PROCESSING DATE--13NOV70

TITLE--SERUM PROPHYLAXIS OF MEASLES -U-

AUTHOR-(04)-SHATROV, I.I., MASTYUKOVA, YU.N., IGNATYEVA, G.V., IVANOVA, L.M.
COUNTRY OF INFO--USSR

SOURCE--ZHURNAL MIKROBIOLOGII EPIDEIOLOGII I IMMUNOBIOLOGII, 1970, NR 3, PP 120-125
DATE PUBLISHED--------70

SUBJECT AREAS--BIOLOGICAL AND MEDICAL SCIENCES

TOPIC TAGS--PROPHYLAXIS, MEASLES, BLOOD SERUM, GAMMA GLOBULIN

CONTROL MARKING--NO RESTRICTIONS

DOCUMENT CLASS--UNCLASSIFIED
PROXY REEL/FRAME--1990/1477 STEP NO--UR/0016/70/000/003/0120/0125

CIRC ACCESSION NO--AP0109537

UNCLASSIFIED

APPROVED FOR RELEASE: 09/01/2001 CIA-RDP86-00513R002202010002-2"

"APPROVED FOR RELEASE: 09/01/2001 CIA-RDP86-00513R002202010002-2

UNCLASSIFIED PROCESSING DATE--13NOV70

2/2 024

CIRC ACCESSION NO--AP0109537

ABSTRACT/EXTRACT--(U) GP-0- ABSTRACT. ANALYSIS OF THE RESULTS OF STUDYING THE CLINICO EPIDEMIOLOGICAL EFFICACY OF VARIOUS GAMMA GLOBULIN DOSES IN THE FOCI WITH VARIOUS EPIDEMIOLOGICAL CONDITIONS DEMONSTRATED THAT THE EFFICACY OF SERUM PROPHYLAXIS OF MEASLES DEPENDED ON A NUMBER OF FACTORS; THE AGE OF THE CHILDREN VACCINATED AND THE EPIDEMIOLOGICAL SITUATION IN THE FOCUS (THE DURATION OF EXPOSURE TO THE SOURCE OF INFECTION AND THE SEVERITY OF MEASLES IN THE PATIENT) THE DOSE, THE PERIOD OF ADMINISTRATION OF GAMMA-GLOBULIN AFTER THE CONTACT, AND THE CONTENT OF SPECIFIC ANTIBODIES IN IT. THES FACTORS PRODUCED A SIGNIFICANT EFFECT NOR ONLY ON THE EXTENT OF MODIFICATIONOF THE INFECTIOUS PROCESS, BUT ALSO ON THE FORMATION OF SPECIFIC ANTIBODIES IN THE PERSONS VACCINATED. THE DOSE OF GAMMA-GLOBULIN WHICH PRODUCES IN 1 TO 4 YEAR OLD CHILDREN A MITIGATED CORSE OF MEASLES IF THEY CONTRACT THE DISEASE AND AN INTENSIVE DEVELOPMENT OF IMMUNOLOGICAL PROCESSES, IS 1.5 ML.

UNCLASSIFIED

APPROVED FOR RELEASE: 09/01/2001 CIA-RDP86-00513R002202010002-2"

"APPROVED FOR RELEASE: 09/01/2001 CIA-RDP86-00513R002202010002-2

Acc. Nr: AP0054065 Ref. Code: UR0531

PRIMARY SOURCE: Khirurgiya, 1970, Nr 4, pp 71-74

TWO SERIES OF OBSERVATIONS OVER PATIENTS WITH ACUTE CHOLECYSTITIS

S. A. Masumov

In two series (from 1945 to 1954 and from 1955 to 1966) the author observed 2424 patients with cholecystitis, of this number in 2141 with acute. There was 52.7 per cent of complicated forms among the operated patients. In acute cholecystitis the operability amounted to 38 per cent with a lethality of 12.1 per cent of cases. Analyzing these observations the author arrived at the conclusion that the indications to operative treatment in acute noncomplicated cholecystitis should be significantly widened, especially in recurrent cholecystitis and in patients of advanced age.

MK

REEL/FRAME

19831162

APPROVED FOR RELEASE: 09/01/2001 CIA-RDP86-00513R002202010002-2"

"APPROVED FOR RELEASE: 09/01/2001 CIA-RDP86-00513R002202010002-2

1/3 . 019 UNCLASSIFIED PROCESSING DATE--09OCT70

TITLE--COMPARATIVE DATA OF THE STUDY OF ALKALINE AND ACID PHOSPHOTASE ACTIVITY OF THE BLOOD SERUM AND NEUTROPHILS IN PATIENTS WITH NONSPECIFIC

AUTHOR-(03)-MASUYEV, A.M., MINKAILOV, M.O., DIBIROV, D.A.

M

COUNTRY OF INFO--USSR

SOURCE--TERAPEVTICHESKIY ARKHIV, 1970, VOL 42, NR 4, PP 94-97

DATE PUBLISHED--------70

SUBJECT AREAS--BIOLOGICAL AND MEDICAL SCIENCES

TOPIC TAGS--PHOSPHATASE, BLOOD SERUM, LUNG, RESPIRATORY SYSTEM DISEASE, PNEUMONIA

CONTROL MARKING--NO RESTRICTIONS

DOCUMENT CLASS--UNCLASSIFIED

PROXY REEL/FRAME--1993/1965 STEP NO--UR/0504/70/042/004/0094/0097

CIRC ACCESSION NO--AP0114378

UNCLASSIFIED

APPROVED FOR RELEASE: 09/01/2001 CIA-RDP86-00513R002202010002-2"

"APPROVED FOR RELEASE: 09/01/2001 CIA-RDP86-00513R002202010002-2

2/3 · 019 UNCLASSIFIED PROCESSING DATE--09OCT70

CIRC ACCESSION NO--AP0114378

ABSTRACT/EXTRACT--(U) GP-0- ABSTRACT. THE AUTHORS INVESTIGATED ALKALINE AND ACID PHOSPHOTASE IN THE BLOOD SERUM AND NEUTROPHILS IN 26 HEALTHY INDIVIDUALS AND 109 PATIENTS WITH DIFFERENT NONSPECIFIC INFLAMMATORY DISEASES OF THE LUNGS. (47 SUFFERED FROM ACUTE PNEUMONIA, 34, CHRONIC PNEUMONIA OF THE 1ST STAGE AND 28, FROM BRONCHIAL ASTHMA AND ASTHMATIC BRONCHITIS). THE ACTIVITY OF ALKALINE AND ACID PHOSPHOTASE IN THE BLOOD SERUM WAS DETERMINED WITH THE AID OF A. BODANSKY'S TECHNIQUE, IN NEUTROPHILS, BY THE METHOD OF NITROGEN COMPOUND, QUANTITATIVE DETERMINATION OF THE ACTIVITY, ACCORDING TO THE PRINCIPLE SUGGESTED BY KEPLOW. IT WAS ESTABLISHED THAT THE ACTIVITY OF ALKALINE IN THE BLOOD SERUM OF HEALTHY PERSONS WAS 3.65 PLUS OR MINUS 23 UNITS, IN NEUTROPHILS, 36.0 PLUS OR MINUS 3.6 UNITS, OF ACID PHOSPHOTASE IN THE BLOOD SERUM, 0.54 PLUS OR MINUS 0.31 UNITS, IN NEUTROPHILS, 30.0 PLUS OR MINUS 3.0 UNITS. ACTIVITY OF THE ALKALINE PHOSPHOTASE IN THE BLOOD SERUM IN ACUTE PNEUMONIA WAS EQUAL TO 15.19 PLUS OR MINUS 0.22 UNITS, IN CHRONIC PNEUMONIA, 15.35 PLUS OR MINUS 0.56 UNITS AND ASTHMATIC BRONCHITIS AND BRONCHIAL ASTHMA, 15.83 PLUS OR MINUS 0.94 UNITS; IN NEUTROPHILS IT CONSTITUTED 193.0 PLUS OR MINUS 6.9 UNITS IN ACUTE PNEUMONIA, 128.0 PLUS OR MINUS 6.4 UNITS, IN CHRONIC PNEUMONIA AND 158.0 PLUS OR MINUS 10.0 UNITES IN BRONCHIAL ASTHMA. ACTIVITY OF ACID PHOSPHOTASE IN THE BLOOD SERUM OF PATIENTS WITH ACUTE PNEUMONIA WAS 2.6 PLUS OR MINUS 0.09 UNITS, NEUTROPHILS, 135.0 PLUS OR MINUS 6.0 UNITS; IN CHRONIC PNEUMONIA CORRESPONDINGLY, 2.3 PLUS OR MINUS 0.07 AND 114.0 PLUS OR MINUS 7.6 UNITS; IN BRONCHIAL ASTHMA, 2.5 MINUS 0.08 AND 110.0 PLUS OR MINUS 9.6 UNITS.

UNCLASSIFIED

APPROVED FOR RELEASE: 09/01/2001 CIA-RDP86-00513R002202010002-2"

"APPROVED FOR RELEASE: 09/01/2001 CIA-RDP86-00513R002202010002-2

3/3 019 UNCLASSIFIED PROCESSING DATE--09OCT70

CIRC ACCESSION NO--AP0114378

ABSTRACT/EXTRACT--ALL THE DATA ARE STATISTICALLY SIGNIFICANT. THE INCREASE OF THE PHOSPHOTASE ACTIVITY IN THE BLOOD SERUM AND NEUTROPHILS IS INTERCONNECTED AND SERVE AS AN INDEX OF THE ACTIVITY OF THE INFLAMMATORY PROCESS IN THE LUNGS. FACILITY: KAFEDRA FAKUL'TETSKOY TERAPII DEGESTANSKOGO MED. INST.

UNCLASSIFIED

APPROVED FOR RELEASE: 09/01/2001 CIA-RDP86-00513R002202010002-2"

"APPROVED FOR RELEASE: 09/01/2001 CIA-RDP86-00513R002202010002-2

MASYAGIN V.E.

Acc. Nr: AP0048299 Abstracting Service: CHEMICAL ABST. 5/70 Ref. Code: 4R0151 3

94354q Spectrum of electron characteristic energy losses in osmium. Zashkvara, V. V.; Korsunskii, M. I.; Larin, M. P.; Red'kin, V. S.; Masyagin, V. E.; Kil'diyarov, M. A.; Chikir, K. Sh. (Inst. Yad. Fiz., Alma-Ata, USSR). Fiz. Tverd. Tela 1970, 12(1), 294-6 (Russ). The spectrum was obtained of characteristic energy losses of electrons in Os. The spectrum was obtained by reflecting a beam of electrons with energy 0.6-1.4 keV from a plane surface of a massive specimen. The energy losses detd. from the max. of the peaks are 11.4, 20.8, 46.5, and 58 eV for a scattering angle of 141°, and 11.3, 24.5, 45.2, and 57.4 eV for a scattering angle of 39°. The peak of the 1st loss is interpreted as the loss of energy for excitation of surface plasma oscillations, and the 2nd loss, as the energy loss for excitation of vol. plasma oscillations in Os. A. Libackyj

JB

1/1 18

REEL/FRAME
19792021

APPROVED FOR RELEASE: 09/01/2001 CIA-RDP86-00513R002202010002-2"

"APPROVED FOR RELEASE: 09/01/2001 CIA-RDP86-00513R002202010002-2

USSR M UDC: 3

ZASHKVARA, V. V., KORSUNSKIY, M. I., LARIN, M. P., RED'KIN, V. S., MASYAGIN, V. YE., KUL'DIYAROV, M. A., and CHOKIN, K. SH., Institute of Nuclear Physics of the Kazakh Academy of Sciences, Alma-Ata (Institut yadernoy fiziki AN Kaz SSR, Alma-Ata)

"Spectrum of Characteristic Energy Losses of Electrons in Osmium"

Leningrad, Fizika Tverdogo Tela, Vol 12, No 1, January 1970, pp 294-296

Abstract: The authors obtained a spectrum of characteristic energy losses of electrons in osmium. This is the first time this has been done and should contribute information about the third transition metal group. The spectrum was produced by reflecting an electron beam with an energy of 0.6-1.4 kev off a flat surface of a massive specimen. Energy analysis of the scattered electrons was carried out by using an electrostatic beta-spectrometer with a cylindrical field. The resolving power of the spectrometer was 0.2%. The spectrum was obtained for two different angles of scattering for the primary beam of electrons. In the first case the beam of primary electrons falls normally to the specimen surface and electrons which had been scattered at a 141° angle in the specimen enter the beta-spectrometer. In the second case the angle between the direction of the primary beam and the specimen surface is 19°30' with electrons analyzed which had been scattered at 39°. The osmium specimen was 0.3 mm thick and was made from low-dispersion powdered osmium pressed and subsequently sintered above 2000°C in a $2 \cdot 10^{-6}$ torr vacuum for several hours. The spectrum was produced without disturbing the vacuum

1/3

APPROVED FOR RELEASE: 09/01/2001 CIA-RDP86-00513R002202010002-2"

"APPROVED FOR RELEASE: 09/01/2001 CIA-RDP86-00513R002202010002-2

USSR

ZASHKVARA, V. V., et al., Fizika Tverdogo Tela, Vol 12, No 1, January 1970, pp 294-296

at the above temperature, with registration of electrons scattered at a 39° angle. It was shown that the osmium spectrum did not change with a fall in temperature down to 1400°C. The position of the specimen was changed for taking a spectrum at an angle of 141°. This required disturbing the vacuum. The latter spectrum was produced at a specimen temperature of 1700°C in a $2 \cdot 10^{-6}$ torr vacuum. A graph is given for the two spectra. Energy losses in electron-volts as determined from curve peaks are as follows: (141° angle of scattering) 11.4, 29.8, 46.5, 58; and (39° angle of scattering) 11.3, 24.5, 45.2, 57.4. The energy position of the first loss does not change with the angle of scattering. The ratio of the height of the first peak to the height of the second loss peak decreases as the angle of scattering increases and with increased primary beam energy. At a specimen temperature below 1300°C, the height of the first loss peak falls significantly and reaches 9.7 ev. This may be interpreted as energy lost in exciting surface plasma oscillation. At the same time, the energy loss does not coincide with theory. A significant discrepancy (on the order of 5 ev) exists in the energy position of the second loss peak. This is probably conditioned by excitation of volume plasma oscillation in the osmium for 141° and 39° scattering angles. Energy calculated for

2/3

APPROVED FOR RELEASE: 09/01/2001 CIA-RDP86-00513R002202010002-2"

"APPROVED FOR RELEASE: 09/01/2001 CIA-RDP86-00513R002202010002-2

USSR

ZASHKVARA, V. V., et al., Fizika Tverdogo Tela, Vol 12, No 1, January 1970, pp 294-296

a volumetric plasmon using the Langmuir formula with the supposition that all eight s and d are free and form a homogeneous electron gas yields 28.6 ev. This value does not correspond to the second peak energy position obtained in this study. The origins of the remaining peaks in the osmium spectrum are also unclear.

3/3

APPROVED FOR RELEASE: 09/01/2001 CIA-RDP86-00513R002202010002-2"

"APPROVED FOR RELEASE: 09/01/2001 CIA-RDP86-00513R002202010002-2

1

USSR

GERASIMOV, L. A., [illegible], V. [illegible], [illegible], S. I., [illegible] and RAYZER, Yu. P.

"Experimental Investigation of Continuously Heated Optical Discharges"

Moscow, Zhurnal Eksperimental'noy i Teoreticheskoy Fiziki, vol. 61, No. 4(10), October 1971, pp 1434-1446

Abstract: This article is the consequence of a letter written to the editor of the ZhETF (Journal of Experimental and Theoretical Physics) by the authors named above, in which they reported obtaining a continuously heated optical discharge in gases at pressures of the order of several atmospheres. The discharge plasma occurs at the center of a gas volume far from all solid surfaces, emits a blinding white light, and lasts as long as energy fed it by an input laser beam lasts. The present article provides the results of the first experimental investigation of some characteristics of this continuous optical discharge. It discusses the existence limits of the discharge's unattenuated mode and their dependence on the power of the light and the pressure of various gases, the stability of the heating for various beam configurations, and the determination of the shape and dimensions of the plasma. The part

1/2

APPROVED FOR RELEASE: 09/01/2001 CIA-RDP86-00513R002202010002-2"

"APPROVED FOR RELEASE: 09/01/2001 CIA-RDP86-00513R002202010002-2

USSR

GENERALOV, N. A., et al, Zhurnal Eksperimental'noy i Teoreticheskoy Fiziki, vol. 61, No. 4(10), October 1971, pp 1434-1446

of the laser beam energy absorbed by the discharge is measured, and the plasma discharge is analyzed by measuring the electron density through the spectroscopic method and estimating the plasma temperature. The authors express their thanks to A. E. Abaliyev for his assistance in setting up the experimental apparatus and conducting the experiments. They are associated with the Institute of Mechanical Problems, Academy of Sciences, USSR.

2/2

APPROVED FOR RELEASE: 09/01/2001 CIA-RDP86-00513R002202010002-2"

"APPROVED FOR RELEASE: 09/01/2001 CIA-RDP86-00513R002202010002-2

USSR UDC: 621.391:519.2

TSUKERMAN, V. M. and KASYUKOV, V. A.

"Analysis of a System for Processing Space-Time Signals"

Sb. tr. Nauchno-tekhn. konferentsii prof.-prepodavat. sostava Vses. zaochn. elektrotekhn. in-ta svyazi, Vyp. 9 (Collected Transactions of the Scientific-Technical Conference of the Professorial-Instructor Staff of the All-Union Correspondence Electrical Engineering Institute of Communication, No. 9) Moscow, 1970, pp 27-36 (from RZh-Radiotekhnika, No. 3, March 71, Abstract No. 3A92)

Translation: A two-wave antenna analyzer system of four isotropic vibrators is considered. The utilization factor of the energy, the degree of compensation of the mixing signal, and the coefficient of space correlation are determined. The possibility of increasing the signal-noise ratio at the output of the processing system over that at the input is shown. Five illustrations, bibliography of four.

1/1

APPROVED FOR RELEASE: 09/01/2001 CIA-RDP86-00513R002202010002-2"

"APPROVED FOR RELEASE: 09/01/2001 CIA-RDP86-00513R002202010002-2

1/2 077 UNCLASSIFIED PROCESSING DATE--30OCT70

TITLE--BREAKDOWN OF GASES UNDER THE INFLUENCE OF THE LONG WAVE INFRARED RADIATION OF A CARBON DIOXIDE LASER -U-

AUTHOR-(05)-GENERALOV, N.A., ZIMAKOV, V.P., KOZLOV, G.I., MASYUKOV, V.A., RAYZER, YU.P.

COUNTRY OF INFO--USSR

SOURCE--PIS'MA ZH. EKSP. TEOR. FIZ. 1970, 11(7), 343-6

DATE PUBLISHED--------70

SUBJECT AREAS--CHEMISTRY, PHYSICS

TOPIC TAGS--CARBON DIOXIDE LASER, CHEMICAL PURITY, ARGON, HELIUM, NEON, IR RADIATION, RUBY LASER, NEODYMIUM LASER, IONIZATION, XENON, LUMINESCENCE, LASER INDUCED PLASMA

CONTROL MARKING--NO RESTRICTIONS

DOCUMENT CLASS--UNCLASSIFIED

PROXY REEL/FRAME--1999/1133 STEP NO--UR/0386/70/011/007/0343/0346

CIRC ACCESSION NO--AP0123123

APPROVED FOR RELEASE: 09/01/2001 CIA-RDP86-00513R002202010002-2"

"APPROVED FOR RELEASE: 09/01/2001 CIA-RDP86-00513R002202010002-2

2/2 077 UNCLASSIFIED PROCESSING DATE--30OCT70

CIRC ACCESSION NO--AP0123123

ABSTRACT/EXTRACT--(U) GP-0- ABSTRACT. THE PULSES (50-250 HZ, 0.3-1.5 MUSEC, PEAK OUTPUT 10 KW) OF THE 10.6-MU RADIATION OF A LASER BASED ON THE CO SUB2-N-HE MIXT., WORKING WITH CONTINUOUS PUMPING, WERE USED TO STUDY THE BREAKDOWN OF AR, NE, HE, AND XE AT LESS THAN 25 ATM. THE BREAKDOWN FREQUENCY WAS GREATER THAN 10 HZ; THE GAS LUMINESCENCE IN THE BREAKDOWN REGION WAS CONTINUOUS. THE FORMS OF THE INCIDENT, PASSING THROUGH THE BREAKDOWN PLASMA, AND REFLECTED (FROM THE PLASMA) PULSES AS WELL AS A VISIBLE LUMINESCENCE OF THE PLASMA WERE RECORDED SIMULTANEOUSLY. THE BREAKDOWN DEVELOPED FOR APPROXIMATELY EQUAL TO 0.1 MUSEC. THE LUMINESCENCE DURATION WAS LONGER THAN THAT OF THE PULSES AND SHORTER BY SIMILAR TO 3 ORDERS THAN THE BREAK BETWEEN THE PULSES. THE BEGINNING OF APPEARANCE OF RARE VISIBLE FLASHES WAS CONSIDERED A THRESHOLD; MOST RELIABLE MEASUREMENTS OF THE THRESHOLD INTENSITY WERE OBTAINED FOR XE. AT VARIANCE WITH XE, THE THRESHOLD IN HE INCREASES CONSIDERABLY WITH INCREASING GAS PURITY. THE SPARKS IN AR, HE, AND NE LIGHT LONGER THAN IN XE AND THE REFLECTION AND ABSORPTION OF THE PULSES IS SMALLER. THE XE ATOMS ARE IONIZED AND AT HIGHER PRESSURES, THE ELECTRON D. REACHES A CRIT. VALUE OF 1.13 TIMES 10 PRIME19-CM PRIME3. THE THRESHOLDS MEASURED ARE DISCUSSED ON THE BASIS OF AN AVALANCHE IONIZATION. THE AVALANCHE DEVELOPS IF THE ENERGY GAIN RATE EXCEEDS THE TOTAL RATE OF LOSSES. THE THRESHOLD CORRESPONDS TO AN ELECTRON D. STABILITY, IN CONTRADICTION TO THE SHORT GIANT PULSES OF THE RUBY AND ND LASERS. FACILITY: INST. PROBL. MEKH., MOSCOW, USSR.

UNCLASSIFIED

APPROVED FOR RELEASE: 09/01/2001 CIA-RDP86-00513R002202010002-2"

"APPROVED FOR RELEASE: 09/01/2001 CIA-RDP86-00513R002202010002-2

Acc. Nr: AP0043666 Ref. Code: UR 0056

PRIMARY SOURCE: Zhurnal Eksperimental'noy i Teoreticheskoy Fiziki, 1970, Vol 58, Nr 2, pp 438-440

«BLEACHING» OF MOLECULAR IODINE AND BREAKDOWN INDUCED IN IT BY LASER PULSES

N. A. Generalov, G. I. Kozlov, V. A. Masyukov

Changes in the absorbtion power of iodine vapor induced by pulses from a Q-switched ruby laser are investigated. It is found that with increase of the intensity from 10^{7} to 10^{9} W/cm^2 iodine gradually bleaches until it becomes totally transparent. For intensities close to the breakdown threshold values a structure is observed which consists of a large number of tiny growing points. The breakdown threshold value an iodine is found to be anomalously low.

1/1

2/DI

REEL/FRAME
19770070

APPROVED FOR RELEASE: 09/01/2001 CIA-RDP86-00513R002202010002-2"

"APPROVED FOR RELEASE: 09/01/2001 CIA-RDP86-00513R002202010002-2

1/2 C22 UNCLASSIFIED PROCESSING DATE--20NOV70

TITLE--PRESERVATION OF THE VAGUS NERVE IN GASTRECTOMY -U-

AUTHOR-(03)-MASYUKOVA, YE.M., TSEKHANOVICH, T.I., KOLOMINA, I.D.

COUNTRY OF INFO--USSR

SOURCE--KHIRURGIYA, 1970, NR 6, PP 39-43

DATE PUBLISHED--------70

SUBJECT AREAS--BIOLOGICAL AND MEDICAL SCIENCES

TOPIC TAGS--DIGESTIVE SYSTEM, SURGERY, JEJUNUM, PROTEIN METABOLISM, CARBOHYDRATE METABOLISM

CONTROL MARKING--NO RESTRICTIONS

DOCUMENT CLASS--UNCLASSIFIED

PROXY REEL/FRAME--3002/1769 STEP NO--UR/0531/70/000/006/0039/0043

CIRC ACCESSION NO--AP0129137

UNCLASSIFIED

APPROVED FOR RELEASE: 09/01/2001 CIA-RDP86-00513R002202010002-2"

"APPROVED FOR RELEASE: 09/01/2001 CIA-RDP86-00513R002202010002-2

2/2 022 UNCLASSIFIED PROCESSING DATE--20NOV70

CIRC ACCESSION NO--AP0129137

ABSTRACT/EXTRACT--(U) GP-0- ABSTRACT. THE ISSUE CARRIES THE RESULTS OF EXAMINATION OF 82 PATIENTS AT REMOTE PERIODS AFTER GASTRECTOMY; IN 18 CASES DURING THE OPERATION THE POSTERIOR CHORD OF THE VAGUS WAS PRESERVED. THE OPERATIONS WERE PERFORMED VIA THE ABDOMINAL APPROACH, THE CONTINUITY OF THE GASTROINTESTINAL TRACT WAS RESTORED WITH THE AID OF ESOPHAGOJEJUNOSTOMY. THE RESULTS OF CLINICAL EXAMINATION OF PATIENTS, AS WELL AS STUDIES OF THE PROTEIN CARBOHYDRATE METABOLSIM, AND THE FUNCTIONAL STATE OF THE LIVER IN PATIENTS AFTER GASTRECTOMY HAVE SHOWN THAT PARTIAL PRESERVATION OF THE PARASYMPATHETIC INNERVATION IS CONDUCTIVE TO A BETTER COMPENSATION OF THE LOST FUNCTIONS.

FACILITY: KAFEDRA GOSPITAL'NOY KHIRURGII TOMSKOGO MEDITSINSKOGO INSTITUTA.

UNCLASSIFIED

APPROVED FOR RELEASE: 09/01/2001 CIA-RDP86-00513R002202010002-2"

"APPROVED FOR RELEASE: 09/01/2001 CIA-RDP86-00513R002202010002-2

USSR UDC: 621.376.54

KILNA, A. A., ZHUKAUSKAS, K. P., MASYULIS, I. L., VEYVERIS, G. P., Institute of Physics and Mathematics, Academy of Sciences of the Lithuanian SSR

"A Device for Discrete Demodulation of Duration-Modulated Pulses"

Moscow, Otkrytiya, izobreteniya, promyshlennyye obraztsy, tovarnyye znaki, No 3, Jan 71, Author's Certificate No 291334, Division H, filed 27 Mar 68, published 6 Jan 71, p 151

Translation: This Author's Certificate introduces a device for discrete demodulation of duration-modulated pulses. The unit contains a scaling circuit, decoder, pulse shaper, diodes and coincidence circuit. As a distinguishing feature of the patent, in order to improve precision and resistance to interference in the demodulation process, the device is equipped with a cadence pulse time discriminator for the pulses from the output of the scaling circuit. The output of this discriminator is connected to the input of the scaling circuit through an oscillator made in the form of a feedback-covered series circuit comprised of a controllable delay line and a diode. The emission frequency of this oscillator is 2n times the frequency of the cadence signal, where n is the ratio of the cadence pulse period to the duration quantizing step for the pulses. The cadence signal line is connected to the set terminal of a flip-flop whose one-output terminal is connected to the controlling input of the above-mentioned delay line through the pulse shaper.

1/1

APPROVED FOR RELEASE: 09/01/2001 CIA-RDP86-00513R002202010002-2"

"APPROVED FOR RELEASE: 09/01/2001 CIA-RDP86-00513R002202010002-2

USSR UDC 621.375.4:621.375.132.3

KADUK, B. G., FLEYSHMAN, I. V., MASYURENKO, YU. A., RALLEV, I. N.

"Application of an Integrated Circuit of a Differential Amplifier as the Emitter Repeater without a Level Shift"

Elektron. tekhnika. Nauch.-tekhn. sb. Mikroelektronika (Electronic Engineering. Scientific and Technical Collection. Microelectronics), 1971, vyp. 5(31), pp 147-148 (from RZh-Radiotekhnika, No 5, May 72, Abstract No 5D113)

Translation: An emitter repeater without zero level shift is proposed which is based on a semiconductor integrated circuit of the P 2222 differential amplifier without additional elements. The dynamic range of the input voltages is 0.1-4.0 volts; the transmission characteristic is rectilinear; the transmission coefficient is 0.97. In the temperature range of 20-70° C the drift of the output voltage is < 0.01 % deg^{-1}. This is explained both by the identicalness of the transistors and the equality of their temperatures. The amplifier can be used in electronic phase meters. There is 1 illustration and a 2-entry bibliography.

1/1

APPROVED FOR RELEASE: 09/01/2001 CIA-RDP86-00513R002202010002-2"

"APPROVED FOR RELEASE: 09/01/2001 CIA-RDP86-00513R002202010002-2

Converters

USSR UDC 681.335.82

MASYURENKO, YU.A., YURCHENKO, YU.P.

"Time-Pulse Voltage Converter Based On Integrated Microcircuits"

Moscow, Pribory i Tekhnika Eksperimenta, No 5, Sept-Oct 1971, pp 114-115

Abstract: The principal circuit and the characteristics of a time-pulse voltage converter are described. The converter is built-up on the basis of two K1UT401B integrated circuits (operational d-c amplifier with differential input "Istok") and a K1TR131 microcircuit (trigger with separate input, series "Microwatt-1"). Use of integrated microcircuits assures stability of the characteristics, reliability of the device, and small dimensions and weight. The principal error does not exceed 0.05 percent in the range of input voltages of 0.05 -- 5 v, and the additional error from a temperature change in the range 5 -- 50° C is 0.1 percent at 10° C. The speed of response is 500 conversions/sec. Received by editors 19 Apr 71. 2 ref. 1 fig. [Institut Elektrodinamiki AN USSR, Kiyev--Institute Of Electrodynamics, Academy Of Sciences, UkrSSR, Kiev]

APPROVED FOR RELEASE: 09/01/2001 CIA-RDP86-00513R002202010002-2"

"APPROVED FOR RELEASE: 09/01/2001 CIA-RDP86-00513R002202010002-2

1/2 025 UNCLASSIFIED PROCESSING DATE--30OCT70

TITLE--LET US BUILD DIRIGIBLES -U-

AUTHOR-(02)-MURYCHEV, V., MASYUTIN, V.

COUNTRY OF INFO--USSR

SOURCE--KOMSOMOL, SKAYA PRAVDA, AUGUST 15, 1960, P 4, COLS 1-6

DATE PUBLISHED--15AUG70

SUBJECT AREAS--BEHAVIORAL AND SOCIAL SCIENCES, AERONAUTICS

TOPIC TAGS--PERSONALITY, UNCONVENTIONAL AIRCRAFT, AIRCRAFT DESIGN/(U)TMS100 DIRIGIBLE

CONTROL MARKING--NO RESTRICTIONS

DOCUMENT CLASS--UNCLASSIFIED

PROXY REEL/FRAME--2000/1914 STEP NO--UR/9007/70/000/000/0004/0004

CIRC ACCESSION NO--AN0125507

UNCLASSIFIED

APPROVED FOR RELEASE: 09/01/2001 CIA-RDP86-00513R002202010002-2"

"APPROVED FOR RELEASE: 09/01/2001 CIA-RDP86-00513R002202010002-2

UNCLASSIFIED PROCESSING DATE--30OCT70

2/2 025

CIRC ACCESSION NO--AN0125507

ABSTRACT/EXTRACT--(U) GP-0- ABSTRACT. THE TWO ARTICLES UNDER THE SAME TITLE ARE DESIGNED TO PROMOTE DIRIGIBLE CONSTRUCTION IN THE SOVIET UNION. TO SUPPORT HIS VIEWPOINT, MURYCHEV GIVES THE ACCOUNT OF FLIGHT TESTS OF A 12 METER RADIO CONTROLLED MODEL OF THE 100 TON TSM-100 DIRIGIBLE MADE OF 40 MICRON THICK DURAL ALLOY. THE TSM-100 DOES NOT NEED BALLAST, CAN LAND AT WILL AT ANY POINT ON THE GROUND, AND CAN FLY AT SPEEDS UP TO 210 KMS PER HOUR. ITS FLIGHT RANGE IS 23,000 KMS. BOTH AUTHORS WOULD LIKE TO SEE A MORE ACTIVE SUPPORT ON THE PART OF THE GOVERNMENT FOR THE DIRIGIBLE CONSTRUCTION PROGRAM. FACILITY: CHIEF DESIGNER AND DIRECTOR OF THE LENINGRAD CIVIC DIRIGIBLE DESIGN BUREAU IMENI TSIOLKOVSKIY. FACILITY: CHIEF ARCHITECT OF THE TSNIIEPGRAZHDANSEL'STROY.

UNCLASSIFIED

APPROVED FOR RELEASE: 09/01/2001 CIA-RDP86-00513R002202010002-2"

"APPROVED FOR RELEASE: 09/01/2001 CIA-RDP86-00513R002202010002-2

USSR UDC 621.385.632/633 (088.8)

MATAFONOV, R.P., SUDAKOV, V.A.

"Production Method For Microwave Electron Devices"

USSR Author's Certificate No 266077, filed 6 Oct 67, published 6 July 70 (from RZh--Elektronika i yeye primeneniye, No 2, February 1971, Abstract No 2A199P)

Translation: A production method is proposed for traveling-wave or backward-wave microwave devices which includes the application of a local absorber to the delay system and its mount, assembly of fittings, and evacuation. With the object of simplifying production technology, application of the local absorber is conducted after evacuation in the prepared device by thermal sputtering of metal from an evaporator positioned within the tube with a simultaneous check of the magnitude of attenuation.

1/1

APPROVED FOR RELEASE: 09/01/2001 CIA-RDP86-00513R002202010002-2"

"APPROVED FOR RELEASE: 09/01/2001 CIA-RDP86-00513R002202010002-2

USSR M UDC 621.385.632/633

MATAFONOV, R. P., SUDAKOV, V. A.

"A Method of Making SHF Electronic Devices"

Moscow, Otkrytiya, Izobreteniya, Promyshlennyye Obraztsy, Tovarnyye Znaki, No 11, 1970, Author's Certificate No 266077, Filed 6 Oct 67, p 70

Abstract: This author's certificate introduces a method of making SHF electronic devices of the traveling wave or backward wave type. The procedure involves applying a local absorbing agent to the deceleration system and its holders, assembling the equipment and evacuation. As a distinguishing feature of the patent, the manufacturing technology is simplified by applying the local absorber after evacuation in the finished unit by thermal vaporization of the metal from a vaporizer located inside the tube, while simultaneously checking the amount of attenuation.

1/2

APPROVED FOR RELEASE: 09/01/2001 CIA-RDP86-00513R002202010002-2"

"APPROVED FOR RELEASE: 09/01/2001 CIA-RDP86-00513R002202010002-2

USSR

MATAFONOV, R. P., et al., Otkrytiya, Izobreteniya, Promyshlennyye Obraztsy, Tovarnyye Znaki, No 11, 1970, Author's Certificate No 266077, Filed 6 Oct 67, p 70

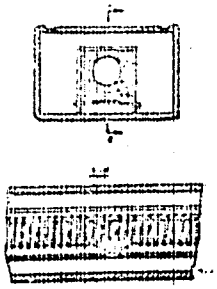

2/2

APPROVED FOR RELEASE: 09/01/2001 CIA-RDP86-00513R002202010002-2"

"APPROVED FOR RELEASE: 09/01/2001 CIA-RDP86-00513R002202010002-2

Information Theory

USSR UDC: 681.322

ALESHCHENKOV, V. B., GRIGORENKO, N. P., GULYAYEV, V. A., MATALIN, L. A., TISHECHKIN, A. S.

"Data Gathering System"

Moscow, Pribory i tekhnika eksperimenta, No 1, Jan-Feb 71, pp 89-93

Abstract: The data gathering system is defined as the control of the parameters of a system under test through the accumulation of data with a minimal expenditure of human labor and in a form convenient for input to an electronic computer. The system considered in this paper is based on a switching analog-digital converter. Signals from various sensors feed into the switching device, which is directed by a control apparatus to select a single signal for input to the converter, and thence to a linearizer, a frequency meter, and a readout device in succession. The exchange of signal information among these blocks is indicated in an accompanying block diagram and is explained in the text together with an account of what happens inside each of the blocks.

1/2

APPROVED FOR RELEASE: 09/01/2001 CIA-RDP86-00513R002202010002-2"

"APPROVED FOR RELEASE: 09/01/2001 CIA-RDP86-00513R002202010002-2

USSR

ALESHCHENKOV, V. B., et al, Pribory i tekhnika eksperimenta, No 1, Jan-Feb 71, pp 89-93

These blocks are also physically separate and are housed in two sections, one of which is equipped with a perforator and a digital printer. The system's technical specifications are listed in a short paragraph.

2/2

APPROVED FOR RELEASE: 09/01/2001 CIA-RDP86-00513R002202010002-2"

"APPROVED FOR RELEASE: 09/01/2001 CIA-RDP86-00513R002202010002-2

GYROS

SO: JPRS 59204
14 NOV 1972

UDC 531.383

GYROS

INFLUENCE OF FRICTION IN THE SUSPENSION BEARINGS ON THE MOTION OF A GYROSCOPE WITH FORCED ROTATION OF THE BASE

[Article by L. A. Matalina; Leningrad, Izvestiya VUZ, Priborostroyeniye, Russian, No 8, 1972, pp 72-76]

The effect of dry friction on the motion of a gyro rotor axis with forced gimbal rotation is investigated. The dry friction torque is determined from a formula which provides for the normal and axial bearing reaction components. Dry friction is shown to be a possible source of additional rotor axis drift.

The influence of dry friction on the behavior of a gyroscope with forced gimbal mount rotation has been studied previously [4]. The friction torque at the bearings is assumed to be constant under these conditions, but with a different magnitude for motion of the gimbals in positive and negative directions.

An attempt has been made in this article to determine the effect of dry friction on the motion of the rotor axis when the frictional torque in the suspension bearings is found by a more precise formula which allows for the influence of normal and axial loadings.

Let us assume that an astatic attitude gyro with an inner gimbal has a rotor unbalanced along the rotational axis and rotor axis misalignments. The instrument base is forcibly rotated around an axis coinciding with the principal rotor axis null position at a rate ω which is large by comparison with the rotor angular velocity Ω.

In order to establish more precise values of the friction torques according to a procedure proposed in [1], the dynamic reactions in the gimbal bearings were first found from the expressions

MATALINA, L.A.

APPROVED FOR RELEASE: 09/01/2001 CIA-RDP86-00513R002202010002-2"

"APPROVED FOR RELEASE: 09/01/2001 CIA-RDP86-00513R002202010002-2

UDC 543.73

USSR

MIZETSKAYA, I. B., MATAT, L. M., and LEDYAYEVA, N. I.

"Determining Ultramicroscopic Silver Impurities in Semiconductor Materials of the $A^{II}B^{VI}$ Type by the Kinetic and Polarographic Methods"

Kiev, Poluprovodnikovaya tekhnika i mikroelektronika, No. 6, 1971, pp 58-64

Abstract: A highly sensitive method for determining ultramicroscopic quantities of silver in small suspensions of material in CdS type compounds through the use of kinetic and polarographic methods is developed. Such determinations are important since silver has a definite effect on the physical characteristics of $A^{II}B^{VI}$ semiconductors. The analysis is conducted on CdS monocrystals, weighing 0.5-1.0 g, dissolved in concentrated nitric acid, first at room temperature and then with heating. The reaction sensitivity for the kinetic method is $1 \cdot 10^{-2}$ μg of Ag in 25 ml of the solution. For the polarographic method, the sensitivity is of the order of 10^{-5} to 10^{-7}%, levels made possible through the use of solid electrodes of graphite made of graphite paste mixed with alpha-brominaphthalene. Determination data are given in tabular

1/2

APPROVED FOR RELEASE: 09/01/2001 CIA-RDP86-00513R002202010002-2"

"APPROVED FOR RELEASE: 09/01/2001 CIA-RDP86-00513R002202010002-2

USSR

MIZETSKAYA, I. B., et al., Poluprovodnikovaya tekhnika i mikroelektronika, No 6, 1971, pp 58-64

form. The average relative error in these determinations amounts to 15-20%. The authors are with the Semiconductor Institute, Ukrainian Academy of Sciences.

2/2

APPROVED FOR RELEASE: 09/01/2001 CIA-RDP86-00513R002202010002-2"

"APPROVED FOR RELEASE: 09/01/2001 CIA-RDP86-00513R002202010002-2

USSR

UDC 543.73:539.239

MIZETSKAYA, I. B., MATAT, L. M., and OLEYNIK, N. D.

"Determining Ultramicroscopic Cobalt Impurities in Semiconductor Materials of the $A^{II}B^{VI}$ Type"

Kiev, Poluprovodnikovaya tekhnika i mikroelektronika, No. 6, 1971, pp 64-69

Abstract: The purpose of the research described in this article is to develop highly sensitive variants for the determination of small weights of cobalt impurities, in the original material from which semiconductors are manufactured, of the order of 0.5 grams. Kinetic and chemical-luminescent methods of analysis were used. The method was developed with the use of pure solutions, in triple-distilled water, and was checked through application to real specimens of monocrystals and semiconductor films. The kinetic and chemical-luminescent methods are explained, and tables of the cobalt determinations are presented. Cobalt contents of the order of 10^{-7} to $5 \cdot 10^{-8}$% of one gram of the total material can be detected by this method, with an average relative error of 20%. The authors are connected with the Semiconductor Institute, Ukrainian Academy of Sciences

1/1

APPROVED FOR RELEASE: 09/01/2001 CIA-RDP86-00513R002202010002-2"

"APPROVED FOR RELEASE: 09/01/2001 CIA-RDP86-00513R002202010002-2

UDC 615.47

USSR

MATAUSHEK, I., Medical and Laboratory Equipment Plant, Leipzig

"Equipment for Medical Facilities"

Moscow, Meditsinskaya Tekhnika, No 1, 1972, pp 57-60

Translation: The main purposes for which equipment is used in medical practice are: (a) to shorten the time required for diagnosis and to increase the reliability of diagnosis; (b) to increase the efficacy of treatment; (c) to create conditions for mass preventive checkups of the population in the shortest time possible; (d) to reduce the risk of surgery; (e) to mechanize and rationalize the work of medical personnel; (f) to replace temporarily or completely the functions of systems or individual organs.

These goals can only be achieved by using the latest devices produced by science and technology.

Now that the latest innovations from the field of cybernetics, systems technology, information theory, and some others are in use, it is quite possible that medical equipment can be developed on the basis of mathematical modeling. This method makes it feasible to design models that reflect both the structure and the functions of systems of interest. It must be based not only on individual medical approaches but on methodological prerequisites, e.g., the process of diagnosis and treatment must be considered. Analysis of the

1/10

APPROVED FOR RELEASE: 09/01/2001 CIA-RDP86-00513R002202010002-2"

"APPROVED FOR RELEASE: 09/01/2001 CIA-RDP86-00513R002202010002-2

USSR

MATAUSHEK, I., Meditsinskaya Tekhnika, No 1, 1972, pp 57-60

individual stages of this process shows that it is similar in structure to the process of regulation. In the course of making a diagnosis information comes from the patient and is then processed. Treatment is regulation of the patient's condition in order to make it normal. A model of a physician-patient-equipment system can be developed on the basis of the foregoing (Fig. 1).

Medical instrumentation will in the future develop in a different way. The first to be developed will be means of obtaining and processing information as well as systems for controlling artificial organs In the field of therapy, the main attention will be focused not on devices but on the wider use of drugs.

Research will have to be undertaken in several directions in order to achieve the planned development of medical instrumentation and guarantee its optimum use in the health service. Specifically, it is necessary to determine the limits of measurements in a system and to ascertain precisely what informative data should in the future be obtained via the information channel of the "physician-patient dialog" and how they should be processed, what should be the optimum type of system in accordance with the nature of the particular medical facility, what should be the systems for mass checkups of the population.

2/10

APPROVED FOR RELEASE: 09/01/2001 CIA-RDP86-00513R002202010002-2"

"APPROVED FOR RELEASE: 09/01/2001 CIA-RDP86-00513R002202010002-2

USSR

MATAUSHEK, I., Meditsinskaya Tekhnika, No 1, 1972, pp 57-60

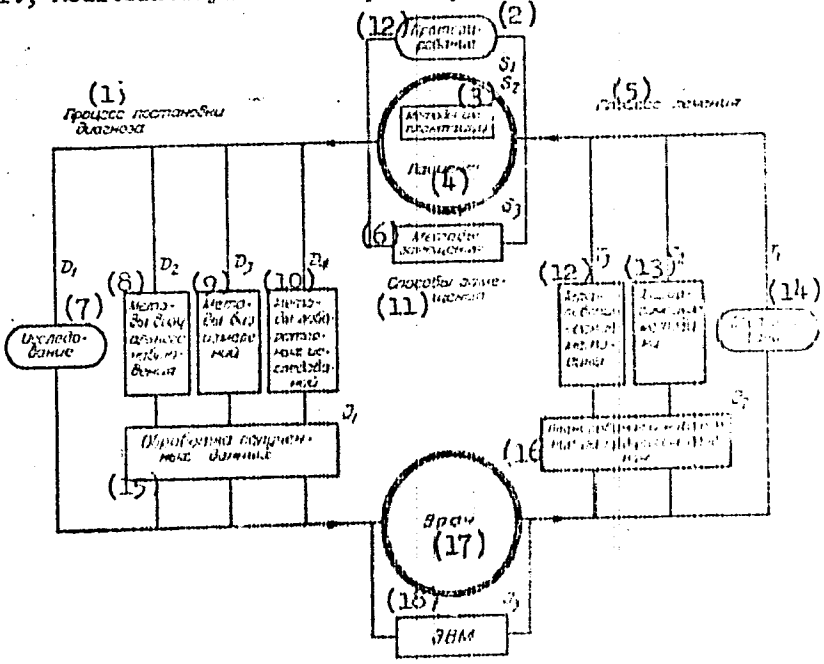

3/10

APPROVED FOR RELEASE: 09/01/2001 CIA-RDP86-00513R002202010002-2"

"APPROVED FOR RELEASE: 09/01/2001 CIA-RDP86-00513R002202010002-2

USSR

MATAUSHEK, I., Meditsinskaya Tekhnika, No 1, 1972, pp 57-60

D_1 - methods of examination making minimal use of instruments (interrogation, examination, palpation); D_2 - methods of visual detection of morphological changes (endoscopy, roentgenography, ultrasonic diagnosis); D_3 - methods of detecting functional changes by measuring the parameters characterizing the patient's condition; D_4 - the same as D_3 but only by obtaining a specimen and then having it analyzed in the laboratory; $J_{1,2,3}$ - methods of processing the data (processing in a computer and collecting the data needed for a diagnosis); T_1 - ordinary method of treatment using drugs and simple pieces of equipment (syringe); T_2 - surgical methods of treatment (electrosurgical apparatus, apparatus for cryosurgery, anesthesia apparatus); T_3 - treatment by regulation (physical therapy apparatus); $S_{1,2,3}$ - methods of treatment -- extracorporeal or implantation (heart-lung machine, artificial kidney, cardiac pacemaker).

1 - Diagnostic process; 2 - Prosthesis; 3 - Implantation methods; 4 - Patient; 5 - Treatment process; 6 - Methods of replacement; 7 - Investigation; 8 - Methods of visual observation; 9 - Methods of biomeasurement; 10 - Methods of laboratory analysis; 11 - Methods of replacement; 12 - Therapeutic methods; 13 - Surgical methods; 14 - Care; 15 - Analysis of data; 16 - Planning and observation of the treatment process; 17 - Physician; 18 - Computer

4/10

APPROVED FOR RELEASE: 09/01/2001 CIA-RDP86-00513R002202010002-2"

"APPROVED FOR RELEASE: 09/01/2001 CIA-RDP86-00513R002202010002-2

USSR

MATAUSHEK, I., Meditsinskaya Tekhnika, No 1, 1972, pp 57-60

Then based on the main aspects of the system (medical methods), it will be necessary to work out an approach to the development of medical apparatus. Apparatus can no longer be developed independently without reference to the various instruments used for diagnosis or therapy. They will have to be based on the demands of the physician-patient-equipment system.

An example of the creation of medical devices that take into account the requirements of the above system is the equipment used for functional diagnostic angiography and angiocardiography. Fig. 2. shows an X-ray room with a high power generator, table for catheterization, device for chaning X-ray film, apparatus for injecting contrast media, and automatic device for programmed control.

Of great importance for modern hospitals are devices for monitoring patients in the operating room and intensive care unit. Systems have already been developed for monitoring a large number of patients and recording 5 to 10 parameters of each. Fig. 3 shows the panel of a patient monitoring system. Note that it is undesirable to present the physician with too many measurements because he will be unable to analyze them quickly and make the proper decision. Hence such apparatus will be developed in two directions. The first will involve decreasing the number of values to be measured by finding the mathematical relationship existing between them. This will yield a limited quantity of

5/10

APPROVED FOR RELEASE: 09/01/2001 CIA-RDP86-00513R002202010002-2"

"APPROVED FOR RELEASE: 09/01/2001 CIA-RDP86-00513R002202010002-2

USSR

MATAUSHEK, I., Meditsinskaya Tekhnika, No 1, 1972, pp 57-60

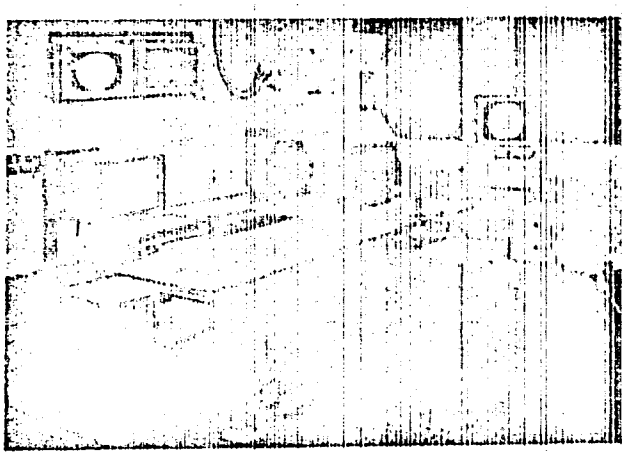

X-ray room

data; if possible, a single or generalized indicator for assessing the patient's condition. This result will have to be as clear as possible and perhaps shown on a screen to permit quicker perception of it. Second, the system should not

6/10

APPROVED FOR RELEASE: 09/01/2001 CIA-RDP86-00513R002202010002-2"

"APPROVED FOR RELEASE: 09/01/2001 CIA-RDP86-00513R002202010002-2

USSR

MATAUSHEK, I., Meditsinskaya Tekhnika, No 1, 1972, pp 57-60

have to detect a crisis in the patient; rather, it should determine the onset of this condition by monitoring his condition mainly with electronic computers.

The creation of automatic clinical laboratories is a promising development (the number of laboratory tests doubled in all the countries of the world the last 5 years). Fig. 4 shows a laboratory in a clinic equipped with automatic devices. It should be borne in mind that a laboratory so equipped produces a heavy flow of information, which can only be processed in a computer.

Articles in scientific journals still discuss with some frequency the question of "replacement of the physician by a machine" and "loss of contact with a patient". I have already noted in other publications of mine that specialists in the socialist countries have come to a unanimous conclusion on this. The wide use of equipment will free the physician from excessive physical and mental work, increase the accuracy of diagnosis, and produce quicker results, thus enabling him to spend more time with his patients. However, this can only be done if he is capable of operating the equipment properly. This does not mean that he has to be a qualified engineer. He need only be given more knowledge of technical subjects while undergoing training. The "technical thinking" in a clinic will be increasingly done by an engineer with a knowledge of biology and medicine. He has to be quite familiar with the range of use of the apparatus and work hand in hand with the physicians. This

7/10

APPROVED FOR RELEASE: 09/01/2001 CIA-RDP86-00513R002202010002-2"

"APPROVED FOR RELEASE: 09/01/2001 CIA-RDP86-00513R002202010002-2

USSR

MATAUSHEK, I., Meditsinskaya Tekhnika, No 1, 1972, pp 57-60

Fig. 3. Panel of a patient monitoring system

8/10

APPROVED FOR RELEASE: 09/01/2001 CIA-RDP86-00513R002202010002-2"

"APPROVED FOR RELEASE: 09/01/2001 CIA-RDP86-00513R002202010002-2

USSR

MATAUSHEK, I., Meditsinskaya Tekhnika, No 1, 1972, pp 57-60

is now the case in many clinics.

The comparatively high cost of medical equipment is not a real bar to its use. If the diagnostic and therapeutic work is properly organized, the equipment can be intensively used, thus permitting its cost to be recouped in a fairly short period of time.

Providing medical facilities with complete up-to-date equipment is one of the basic tasks confronting the specialized research and design organizations of all the socialist countries working together in close, productive harmony.

9/10

APPROVED FOR RELEASE: 09/01/2001 CIA-RDP86-00513R002202010002-2"

"APPROVED FOR RELEASE: 09/01/2001 CIA-RDP86-00513R002202010002-2

USSR

MATAUSHEK, I., Meditsinskaya Tekhnika, No 1, 1972, pp 57-60

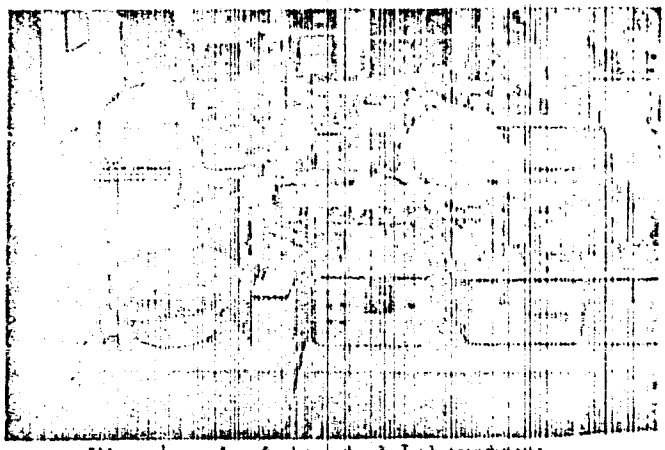

Fig. 4. An Automated Laboratory

10/10

APPROVED FOR RELEASE: 09/01/2001 CIA-RDP86-00513R002202010002-2"

"APPROVED FOR RELEASE: 09/01/2001 CIA-RDP86-00513R002202010002-2

USSR UDC 620.172.226:669.15'71-194

MATAVIN, A. A.

"Creep of 1Yu7Kh2S1 and 1Yu7Kh2N3S1T2 Steels"

Moscow, Metallovedeniye i Termicheskaya Obrabotka Metallov, No 9, 1970, pp 54-55

Abstract: The creep of 1Yu7Kh2S1 and 1Yu7Kh2N3S1T2 aluminum-containing steels is compared to that of Kh25T and Kh23N13 commercial steels. Chemical compositions of the steels tested are as follows:

Steel Types	Content of Elements, %								
	C	Mn	Si	Al	Cr	Ni	Ti	P	S
Type 1Yu7Kh2S1	0.10	0.48	1.30	7.44	2.00	—	—	0.018	0.025
1Yu7Kh2N3S1T2	0.10	0.65	1.5	7.28	1.85	2.7	1.62	0.022	0.023
Kh25T	0.11	0.41	0.35	—	26.6	—	0.40	0.020	0.019
Kh23N13	0.12	0.73	0.62	—	22.3	12.7	—	0.028	0.024

1/2

APPROVED FOR RELEASE: 09/01/2001 CIA-RDP86-00513R002202010002-2"

"APPROVED FOR RELEASE: 09/01/2001 CIA-RDP86-00513R002202010002-2

USSR

MATAVIN, A. A., Metallovedeniye i Termicheskaya Obrabotka Metallov, No 9, 1970, pp 54-55

The creep of 1Yu7Kh2N3S1T2 steel at 800, 900 and 1000°C is higher than for the standard steels studied and the duration of load application is 200-6000 hours longer. Experimental steel 1Yu7Kh2S1 has greater high-temperature strength than Kh25T standard steel, but is 1.2-3 times lower in this characteristic than Kh23N13 chrome-nickel steel.

2/2

APPROVED FOR RELEASE: 09/01/2001 CIA-RDP86-00513R002202010002-2"

"APPROVED FOR RELEASE: 09/01/2001 CIA-RDP86-00513R002202010002-2

USSR UDC: 621.373.072.6

LASHKO, A. G., MATENKOV, N. A.

"Improving the Frequency Stability of Electrical Oscillations"

V sb. Vopr. elektrosvyazi (Problems of Electrical Communications--collection of works), Kiev, "Tekhnika", 1970, pp 152-157 (from RZh-Radiotekhnika, No 11, Nov 70, Abstract No 11D486)

Translation: The authors discuss the possibility of improving the frequency stability of electrical oscillations by compensating for the instability of the input oscillation. A regenerative frequency converter is used for this purpose. Conditions are determined for self-excitation of the regenerative frequency converter; a formula is derived which may be used to determine the degree of coincidence of phase characteristics of the converter filters, assuming a given output frequency instability. One illustration, bibliography of two titles. Resumé.

1/1

APPROVED FOR RELEASE: 09/01/2001 CIA-RDP86-00513R002202010002-2"

"APPROVED FOR RELEASE: 09/01/2001 CIA-RDP86-00513R002202010002-2

USSR UDC 576.851.49.094.85:615.371:851.497.012.6

BOGDANOVA, V. V., STANISLAVSKIY, YE. S., MATER, G. A., and NEGINA, YU. P., Gor'kiy Institute of Epidemiology and Microbiology and Moscow Institute of Vaccines and Sera imeni Mechnikov

"Protective Properties of Cell Fractions and Mixtures of Isolated from the Vi-Positive Strain of Typhoid Bacillus"

Moscow, Zhurnal Mikrobiologii, Epidemiologii i Immunobiologii, No 12, 1971, pp 87-89

Abstract: Various cell fractions isolated from S. typhi Ty_2 4446 (capsular substance, cell walls, culture fluid, capsular substance + cell walls, culture fluid + cell walls) were tested as vaccines in mice. Two weeks after the mice were vaccinated, they were infected with a virulent strain of S. typhi Ty_2 4446 (LD_{50} 13 million cells). The mixture of cell walls and culture fluid proved to be the most efficacious in protecting mice infected with 5 LD_{50} of typhoid bacillus. Both fractions possess little toxicity for mice and contain protective Vi and O antigens (whose macromolecular organization is close to the crude antigens in the original microbial cell). Unlike corpuscular vaccine, they do not contain intracellular components that may have immunodepressive activity or stimulate the synthesis of auto-antibodies. 1/1

APPROVED FOR RELEASE: 09/01/2001 CIA-RDP86-00513R002202010002-2"

"APPROVED FOR RELEASE: 09/01/2001 CIA-RDP86-00513R002202010002-2

1/2 014 UNCLASSIFIED PROCESSING DATE--13NOV70

TITLE--IMMUNOELECTROPHORETIC ANALYSIS OF THE S. TYPHI TY SUB2 ANTIGENIC COMPLEX -U-

AUTHOR-(02)-BOGDANOVA, V.V., MATER, G.A.

COUNTRY OF INFO--USSR

SOURCE--ZHURNAL MIKROBIOLOGII, EPIDEMIOLOGII I IMMUNOBIOLOGII, 1970, NR 4, PP 25-28

DATE PUBLISHED--------70

SUBJECT AREAS--BIOLOGICAL AND MEDICAL SCIENCES

TOPIC TAGS--TYPHOID FEVER, O ANTIGEN, ELECTROPHORESIS

CONTROL MARKING--NO RESTRICTIONS

DOCUMENT CLASS--UNCLASSIFIED

PROXY REEL/FRAME--1990/1472 STEP NO--UR/0016/70/000/004/0025/0028

CIRC ACCESSION NO--AP0109532

UNCLASSIFIED

APPROVED FOR RELEASE: 09/01/2001 CIA-RDP86-00513R002202010002-2"

"APPROVED FOR RELEASE: 09/01/2001 CIA-RDP86-00513R002202010002-2

2/2 014 UNCLASSIFIED PROCESSING DATE--13NOV70

CIRC ACCESSION NO--AP0109532

ABSTRACT/EXTRACT--(U) GP-0- ABSTRACT. BOIVIN ANTIGEN OBTAINED FROM TYPHOID STRAIN TY SUB2 4446 WAS SUBJECTED TO IMMUNOELECTROPHORETIC ANALYSIS; INDIVIDUAL COMPONENTS OF THE COMPLEX AND THEIR INTERACTION WERE CHARACTERIZED. AS DEMONSTRATED, VI ANTIGEN WAS BOUND BY THERMOLABILE BOND WITH THE O ANTIGENIC COMPLEX, APPARENTLY WITH ITS PROTEING COMPONENT; AS A RESULT, AN ANODE O FRACTION WAS DETECTED IN IMMUNOELECTROPHORESIS. THE THERMOLABILE BOND WAS DISRUPTED ON HEATING, AND THE O ANTIGENIC COMPLEX ACQUIRED A MOBILITY IN THE ELECTRIC FIELD CHARACTERISTIC OF TYPHOID O ANTIGEN IN THE DIRECTION OF THE CATHODE.

UNCLASSIFIED

APPROVED FOR RELEASE: 09/01/2001 CIA-RDP86-00513R002202010002-2"

"APPROVED FOR RELEASE: 09/01/2001 CIA-RDP86-00513R002202010002-2

USSR UDC: 8.74

MATER, Ye. A., FEL'DMAN, G. L.

"Concerning a Method of Joining Data Files"

V sb. Tsifr. vychisl. tekhnika i programmir. (Digital Computer Technology and Programming--collection of works), vyp. 7, Moscow, "Sov. radio", 1972, pp 83-93 (from RZh-Kibernetika, No 8, Aug 72, Abstract No 8V624)

Translation: An algorithm is proposed for uniting data blocks of various lengths recorded on magnetic tape into a single ordered data file. The algorithm is based on Hoffman's idea of synthesizing codes of minimum redundancy and the corresponding tree of interconnection. Estimates are given of the effectiveness of a modified algorithm with respect to the number of tape passes, and the procedure is compared with the merging method. Authors' abstract.

1/1

APPROVED FOR RELEASE: 09/01/2001 CIA-RDP86-00513R002202010002-2"

"APPROVED FOR RELEASE: 09/01/2001 CIA-RDP86-00513R002202010002-2

Organometallic Compounds

USSR UDC 547.13:546.72 + 546.14/15

NESMEYANOV, A. N., KOCHETKOVA, N. S., MATERIKOVA, R. B., PALITSYN, N. P., KSENZENKO, V. I., and SOBOLEVA, T. S., Institute of Metal Organic Compounds, Academy of Sciences USSR

"Reaction of Ferrocene Derivatives With Bromine and Iodine"

Leningrad, Zhurnal Organicheskoy Khimii, Vol 9, No 2, Feb 73, pp 378-380

Abstract: Reaction of bromine and iodine with ferrocene substituted with electron donating and electron accepting substituents was studied. At -20° in heptane bromine decomposes ethyl- and 1,1'-diethylferrocene; with 1,1',3,3'-tetra-tert-butylferrocene it forms the tribromide of 1,1',3,3'-tetra-tert-butylferrocenium. At 50° in benzene iodine does not decompose ferrocene or its derivatives, forming addition products with various quantities of iodine. In general, presence of electron-donating substituents and reaction with strong oxidizers (Cl_2, Br_2) favor the decomposition of the ferrocene ring. In case of hindered derivatives or when the halogen is a weak oxidizer (iodine) mainly oxidation products are obtained, with an intact ferrocene ring. Oxidation to ferrocenium evidently preserves the system from further decomposition by the halogen.

1/1

APPROVED FOR RELEASE: 09/01/2001 CIA-RDP86-00513R002202010002-2"

"APPROVED FOR RELEASE: 09/01/2001 CIA-RDP86-00513R002202010002-2

1/2 008 UNCLASSIFIED PROCESSING DATE--30OCT70

TITLE--STRUCTURE OF CYCLOPENTADIENYL COMPOUNDS OF NONTRANSITION METALS OF PERIODS 5 AND 6 REVIEWED FROM NMR SPECTROSCOPIC DATA, SANDWICH NATURE OF

AUTHOR-(03)-FEDIN, E.I., FEDOROV, L.A., MATERIKOVA, R.B.

COUNTRY OF INFO--USSR

SOURCE--ZH. STRUKT. KHIM. 1970, 11(1), 174-92

DATE PUBLISHED--------70

SUBJECT AREAS--CHEMISTRY

TOPIC TAGS--CYCLIC GROUP, NMR SPECTRUM, METAL COMPLEX COMPOUND

CONTROL MARKING--NO RESTRICTIONS

DOCUMENT CLASS--UNCLASSIFIED

PROXY REEL/FRAME--2000/1652 STEP NO--UR/0192/70/011/001/0174/0192

CIRC ACCESSION NO--AP0125274

UNCLASSIFIED

APPROVED FOR RELEASE: 09/01/2001 CIA-RDP86-00513R002202010002-2"

"APPROVED FOR RELEASE: 09/01/2001 CIA-RDP86-00513R002202010002-2

2/2 008 UNCLASSIFIED PROCESSING DATE--30OCT70

CIRC ACCESSION NO--AP0125274

ABSTRACT/EXTRACT--(U) GP-0- ABSTRACT. A REVIEW OF THE NMR SPECTROSCOPIC DATA PERTAINING TO CYCLOPENTADIENYL DERIVS. OF NON TRANSITION METALS OF PERIOD 5 AND 6 IS PRESENTED. 80 REFS. FACILITY: INST. ELEMENTOORG. SOEDIN., MOSCOW, USSR.

UNCLASSIFIED

APPROVED FOR RELEASE: 09/01/2001 CIA-RDP86-00513R002202010002-2"

"APPROVED FOR RELEASE: 09/01/2001 CIA-RDP86-00513R002202010002-2

USSR UDC 546

MATEROVA, Ye. A., NIKOL'SKIY, B. P., Academician, MUKHOVIKOV, V. V., Leningrad State University imeni A. A. Zhdanov

"Complex Formation in a Liquid Cation Exchanger"

Moscow, Doklady Akademii Nauk SSSR, Vol 211, No 2, pp 357-360

Abstract: The authors examine the results of an experimental study of equilibrium for systems of the liquid cation exchanger type (dioctyl phosphoric acid in chlorobenzene) and aqueous solutions of $HCl-CaCl_2$, $HCl-SrCl_3$, $HCl-BaCl_2$. The $M^{2+}-H^+$ exchange between aqueous and organic solutions is considered -- $MR_2 + H^+ \rightleftarrows H_2R_2 + M^{2+}$, where R^- is the organophosphorus anion, and M^{2+} is the symbol for ions Ca^{2+}, Sr^{2+}, Ba^{2+}. Experiments are done to determine the part played by complexing between the molecules of organic acid H_2R_2 and salt MR_2. The results show high selectivity of the organic phase for hydrogen ions.

1/1

APPROVED FOR RELEASE: 09/01/2001 CIA-RDP86-00513R002202010002-2"

"APPROVED FOR RELEASE: 09/01/2001 CIA-RDP86-00513R002202010002-2

USSR

UDC 661.183.123

NOVIKOV, B. G., BELINSKAYA, F. A., and MATEROVA, YE. A.

"Structure and Ion Exchange Properties of Crystalline Antimonate Cation Exchanger. Exchange of Monovalent Cations"

Leningrad, Vestnik Leningradskogo Universiteta, Seriya Fizika i Khimiya, No 1, Feb 71, pp 29-35

Abstract: The article describes results of a study of the exchange of hydrogen ions for some monovalent cations on the new crystalline antimonate cation exchanger, as well as considering the structure of the ion exchanger. A structural model of the cation exchanger is shown. The cation exchange was studied under static conditions. For the characteristic of the active groups potenticmetric titration of the ion exchanger was carried out with 0.1 N solutions of NaOH, KOH, LiOH, CsOH and $(CH_3)_4NOH$ against a 1 N background of the corresponding chlorides. For a quantitative description of the exchange of monovalent cations on the cation exchanger a study was made of ion exchange equilibrium in the systems NaCl – HCl, KCl – HCl, LiCl – HCl and $AgNO_3$ – HNO_3 at

1/2

APPROVED FOR RELEASE: 09/01/2001 CIA-RDP86-00513R002202010002-2"

"APPROVED FOR RELEASE: 09/01/2001 CIA-RDP86-00513R002202010002-2

USSR

NOVIKOV, B. O., et al., Vestnik Leningradskogo Universiteta, Seriya Fizika i Khimiya, No 1, Feb 71, pp 29-35

20 and 80° C at constant 0.1 N ionic strength of solution. Selectivity coefficients were calculated on the basis of the resultant data. It was found that the relative affinity of the antimonic cation exchanger for cations decreases in the order $Ag^+ > Na^+ > H^+ > K^+ > Li^+$. Further study of the antinomic cation exchanger is promising because of its unique ion exchange properties, viz. sharply pronounced exchange selectivity in conjunction with chemical stability. Possible practical applications of the cation exchanger include its use for the quantitative extraction of silver ions from mixed solutions, as well as for the separation of alkali metal ions. A subsequent article will consider the exchange of bivalent cations on the antimonate cation exchanger.

The authors thank V. N. MARKIN for useful consultation in the construction of the structural model of the cation exchanger.

2/2

APPROVED FOR RELEASE: 09/01/2001 CIA-RDP86-00513R002202010002-2"

"APPROVED FOR RELEASE: 09/01/2001 CIA-RDP86-00513R002202010002-2

UDC 661.183.123

USSR

NOVIKOV, B. G., BELINSKAYA, F. A., and MATEROVA, YE. A.

"Exchange of Bivalent Cations on Crystalline Antimonate Cation Exchanger"

Leningrad, Vestnik Leningradskogo Universiteta, Seriya Fiziki i Khimiya, No 1, Feb 71, pp 35-42

Abstract: The article describes results of a study of the exchange of hydrogen ions for bivalent cations on the antimonate cation exchanger in the systems $MgCl_2-HCl$, $CaCl_2-HCl$, $SrCl_2-HCl$, $BaCl_2-HCl$, $NiCl_2-HCl$ and $CdCl_2-HCl$. The ion exchange experiments were carried out under static conditions by the method of individual samples at 20 and 80° C. Selectivity coefficients were calculated on the basis of ion-exchange equilibrium data for the systems $SrCl_2-HCl$, $CaCl_2-HCl$, $CdCl_2-HCl$ and $BaCl_2-HCl$. The dependence of the selectivity coefficients on the ion composition of the cation exchanger was found, making it possible to determine some thermodynamic functions of the $M^{2+} \rightarrow H^+$ exchange. It was found that the ions rank as follows in their

1/2

APPROVED FOR RELEASE: 09/01/2001 CIA-RDP86-00513R002202010002-2"

"APPROVED FOR RELEASE: 09/01/2001 CIA-RDP86-00513R002202010002-2

USSR

NOVIKOV, B. G., et al., Vestnik Leningradskogo Universiteta, Seriya Fizika i Khimiya, No 1, Feb 71, pp 35-42

affinity for the cation exchanger: $Cd^{2+} > Sr^{2+} > Ba^{2+} \gg Ca^{2+} \gg Mg^{2+}$, Ni^{2+}. It is suggested that there are at least two factors determining ion exchange selectivity: the energy of hydration of the counterions and their polarizing capacity. The preferential influence of these factors on the ion exchange process is due in turn to structural peculiarities of the antimonate cation exchanger and the chemical nature of ionogenic groups. On the basis of the sharply pronounced selectivity of exchange of bivalent ions the cation exchanger is recommended for the extraction of Cd^{2+}, Sr^{2+} and Ba^{2+} ions from acid solutions, as well as for separation of the ions Cd^{2+} (Sr^{2+}, Ba^{2+}) $- Ca^{2+}$ (Mg^{2+}, Ni^{2+}) and $Ca^{2+} - Mg^{2+}$ (Ni^{2+}).

2/2

APPROVED FOR RELEASE: 09/01/2001 CIA-RDP86-00513R002202010002-2"

"APPROVED FOR RELEASE: 09/01/2001 CIA-RDP86-00513R002202010002-2

UDC 541.13

USSR

MATEROVA, Ye. A. and MIKHAYLOVA, S. S.

"Conductance of Heterogeneous Membranes of Phosphate Cation Exchangers in Different Ionic Forms"

Leningrad, Vestnik Leningradskogo Universiteta, Seriya Fizika i Khimiya, No 1, Feb 71, pp 46-48

Abstract: The article describes results of a study of the conductance of heterogeneous membranes of a KRF brand ion exchanger (5, 8, 12 percent DVB) and zirconyl phosphate (ZrP) in HCl, NaCl, LiCl, $MgCl_2$ and $BaCl_2$ solutions in the 0.002-1.0 M concentration range at $(22 \pm 0.1)^{\circ}$ C. The dependence of the specific conductance of membranes of ZrP and KRF (12 percent DVB) on the external solution concentration was studied. It was found that the specific conductance of ZrP membranes is approximately an order less than the conductance of KRF membranes in all ionic forms. The specific conductance for all the investigated membranes varies as follows: H > Na > Li > Ba > Mg. Specific conductance increases with an increase in the external solution concentration. The appreciable differences in the conductance of the investigated phosphate membranes in chloride solutions open up possibilities of their use in the electrodialysis of solutions of complex composition.

1/1

APPROVED FOR RELEASE: 09/01/2001 CIA-RDP86-00513R002202010002-2"

"APPROVED FOR RELEASE: 09/01/2001 CIA-RDP86-00513R002202010002-2

Electrochemistry

UDC 541.13

USSR

MATEROVA, YE. A., and MIKHAYLOVA, S. S.

"Study of Phosphate Membranes by the EMF Method in Pure and Mixed HCl-NaCl, HCl-LiCl Solutions"

Leningrad, Vestnik Leningradskogo Universiteta, Seriya Fizika i Khimiya, No 1, Feb 71, pp 43-45

Abstract: The article describes results of a study of heterogeneous membranes of phosphate cation exchangers, brand KRF (5, 8, 12 percent DVB) and zirconyl phosphate (ZrP). The membranes contain 50 percent ion exchanger and polyethylene as binding agent. To study the selective permeability of the membranes measurements were taken of the emf of concentration cells with a memorane in pure and mixed HCl-NaCl, HCl-LiCl solutions. A general expression is given for the emf of a galvanic cell, and specificity constants are estimated. It is shown that the specificity of the investigated membranes decreases in the order $H^+ > Na^+ > Li^+$.

1/1

APPROVED FOR RELEASE: 09/01/2001 CIA-RDP86-00513R002202010002-2"

"APPROVED FOR RELEASE: 09/01/2001 CIA-RDP86-00513R002202010002-2

Acc. Nr: AP0034222 Abstracting Service: CHEMICAL ABST. 4-70 Ref. Code: UR 0078

71242c Complexing boric acid with anions of hydroxy acids in an ion-exchange phase. Grekovich, A. L., Mazeroval, E. A. (USSR). *Zh. Neorg. Khim.* 1970, 15(1), 187-90 (Russ). Effect of H_3BO_3 concn. was studied on the reactions of H_3BO_3 with anions of tartaric, citric, malonic, and lactic acids in ion-exchange reactions. Complex formation ability of polyol-H_3BO_3 systems decreased with the anion in the order: tartrate > citrate > malonate > lactate. Stability consts. of the corresponding complexes were 55.0, 21.2, 11.3, and 6.7, resp. HMJR

REEL/FRAME

19710875

APPROVED FOR RELEASE: 09/01/2001 CIA-RDP86-00513R002202010002-2"

"APPROVED FOR RELEASE: 09/01/2001 CIA-RDP86-00513R002202010002-2

Acc. Nr: AP0034097 Abstracting Service: CHEMICAL ABST. 4-70 Ref. Code: UR 0079

71301w Use of electrodialysis with anion exchange membranes for studying the state of boron in solutions. Grebenyuk, A. L.; [redacted] E. A. (USSR). *Zh. Neorg. Khim.* 1970, 15(1), 182-6 (Russ). The compn. of ionic forms of borate in soln. was detd. by using electrodialysis with anion-exchange (MA-40) membrane. Study of H_3BO_3-lactic acid (HLact) or H_3BO_3-oxalic acid (H_2Ox) systems proved the presence of $[BO_3.2HLact]^-$, $[BO_3.HLact]^-$, and $[BO_3.H_2Ox]^-$. HLJR

18

REEL/FRAME
19710740

APPROVED FOR RELEASE: 09/01/2001 CIA-RDP86-00513R002202010002-2"

"APPROVED FOR RELEASE: 09/01/2001 CIA-RDP86-00513R002202010002-2

1/2 022 UNCLASSIFIED PROCESSING DATE--04DEC70

TITLE--WATERPROOFING OF MATERIALS -U-

AUTHOR-(05)-SHANTAROVICH, P.S., LARIONOVA, V.D., POTAPOVA, T.P., ZURABYAN, K.M., MATETSKENE, N.I.

COUNTRY ~~OF INFO--USSR~~

SOURCE--U.S.S.R. 265,063

REFERENCE--OTKRYTIYA, IZOBRET., PROM. OBRAZTSY, TOVARNYE ZNAKI 1970,

DATE PUBLISHED--09MAR70

SUBJECT AREAS--MATERIALS, CHEMISTRY

TOPIC TAGS--WATERPROOFING, CHEMICAL PATENT, LEATHER, ALKALI METAL, GLYCOL, COPOLYMER, STYRENE, MALEIC ANHYDRIDE

CONTROL MARKING--NO RESTRICTIONS

DOCUMENT CLASS--UNCLASSIFIED

PROXY REEL/FRAME--3007/1753 STEP NO--UR/0432/70/000/000/0000/0000

CIRC ACCESSION NO--AA0136993

UNCLASSIFIED

APPROVED FOR RELEASE: 09/01/2001 CIA-RDP86-00513R002202010002-2"

"APPROVED FOR RELEASE: 09/01/2001 CIA-RDP86-00513R002202010002-2

2/2 022 UNCLASSIFIED PROCESSING DATE--04DEC70

CIRC ACCESSION NO--AA0136993

ABSTRACT/EXTRACT--(U) GP-0- ABSTRACT. MATERIALS SUCH AS LEATHER ARE WATERPROOFED BY TREATING THEM WITH THE REACTION PRODUCT OF AN ALKALI METAL GLYCOLATE AND A COPOLYMER OF STYRENE WITH MALEIC ANHYDRIDE OR POLY(ACRYLIC ACID). FACILITY: INSTITUT KHIMICHESKOY FIZIKI AN SSSR I TSENTRAL'NYY NAUCHNO-ISSLEDOVATEL'SKIY INSTITUT KOZHEVENNOY PROMYSH LENNOSTI.

UNCLASSIFIED

APPROVED FOR RELEASE: 09/01/2001 CIA-RDP86-00513R002202010002-2"

"APPROVED FOR RELEASE: 09/01/2001 CIA-RDP86-00513R002202010002-2

USSR UDC: 8.74

MATEU, V. Yu., SHATOKHIN, O. M.

"On Estimating the Economy of Realizing a Digital Computer Control Device"

Tr. In-ta elektron. upravl. mashin (Works of the Institute of Control Computers), 1972, vyp. 17, pp 71-78 (from RZh-Kibernetika, No 5, May 73, abstract No 5V741 by V. Mikheyev)

Translation: The paper deals with problems of estimating the expenditures on realization of signal shaping circuits for control signals (elementary commands) in the control devices of digital computers using fixed microcommand storage as the signal sensors. The evaluation criterion used is the amount of total expenditures on the microcommand storage equipment and code conversion equipment necessary for shaping elementary commands from the codes of the microcommand fields. To facilitate design work and speed up the search for an adequately economic solution, a program is written out for estimating expenses on individual components of control signal shaping circuits. The program is written in BESM-4 codes. Specific

1/2

APPROVED FOR RELEASE: 09/01/2001 CIA-RDP86-00513R002202010002-2"

"APPROVED FOR RELEASE: 09/01/2001 CIA-RDP86-00513R002202010002-2

USSR

MATEU, V. Yu., SHATOKHIN, O. M., Tr. In-ta elektron. upravl. mashin, 1972, vyp. 17, pp 71-78

examples are given, and tables are presented summarizing the results found by using the program.

2/2

APPROVED FOR RELEASE: 09/01/2001 CIA-RDP86-00513R002202010002-2"

"APPROVED FOR RELEASE: 09/01/2001 CIA-RDP86-00513R002202010002-2

4

USSR

UDC 616.988.73-022.39:598.4

KAMENOV, Ye. K., NIKOLOV, Z. V., NEDELCHEVA, S. B., EMIEVA-SEROYEVA, Yel. V., NEDELCHEVA, N. P., PASKALEVA, M. G., DENCHEV, St. I., and TURLAKOV, I. G., Chair of Epidemiology, Institute for Specialization and Advanced Training of Physicians, Republic Antiepidemic Station, and Zoological Institute and Museum of the Bulgarian Academy of Sciences, Sofia, Bulgaria

"Aquatic and Swamp Birds -- Carriers of Agents of Infectious Diseases. Communication I: Ornithosis"

Moscow, Voprosy Virusologii, No 4, Jul/Aug 71, pp 437-441

Abstract: Since Bulgaria lies along one important flight route of migrant aquatic and swamp fowl, a serological investigation was performed on 350 wild birds caught along Bulgaria's Black Sea shore and Danube River. Specific antibodies against ornithosis were found in specimens belonging to the orders Ardiiformes, Podicipidiformes, Lariformes, Ralliformes, and Charadriiformes. In some areas densely populated by wild ducks, antibodies against ornithosis virus were found in 21.8% of wild ducks, in 44.7% of domestic ducks on neighboring farms, and in 54.5% of people. These findings support the previously advanced hypothesis that migrating aquatic and swamp birds play an important role in the epidemiology ornithosis in natural foci and in the transmission of this disease to domestic fowl and to humans.

1/1

APPROVED FOR RELEASE: 09/01/2001 CIA-RDP86-00513R002202010002-2"

"APPROVED FOR RELEASE: 09/01/2001 CIA-RDP86-00513R002202010002-2

USSR

UDC 62-977:669.15-194.2

BERNSHTEYN, M. L., ZAYMOVSKIY, V. A., and MATEVOS'YAN, A. P., Moscow Institute of Steels and Alloys

"Thermal Stability of Thermomechanical Hardening of Type 40 Steel"

Moscow, Metallovedeniye i Termicheskaya Obrabotka Metallov, No 9, 1970, pp 26-28

Abstract: A study was made of the effect of the unusually high thermal stability of the hardening produced by high-temperature heat and mechanical working performed under plant conditions on standard rolled products of type 40 steel (diameter 19 mm). Mechanical, metallographic, X-ray structural, and electron microscope studies were performed. It was established that a high combination of mechanical properties is retained after intermediate holding in the α and γ areas (for various lengths of time) and subsequent hardening plus tempering. It is concluded that the effect results from austenite phase separation (partial bainite conversion) and the deformation involved in rolling. Elimination of the hardening effect requires quadruple annealing at 900°C for four hours. Intermediate tempering at 600°C or normalization at 840°C with holding times of up to ten hours do not decrease the mechanical properties.

1/1

APPROVED FOR RELEASE: 09/01/2001 CIA-RDP86-00513R002202010002-2"

"APPROVED FOR RELEASE: 09/01/2001 CIA-RDP86-00513R002202010002-2

USSR

ALIKHANYAN, A. I., ASATIANI, T. L., AVAKYAN, K. M., KHIROVA, L. A., IVANOV, V. A., KRISHCHYAN, V. M., [redacted]

"Measurement Accuracy of Charged Particle Pulses in Wide-Gap Spark Chambers"

Moscow, Zhurnal Eksperimental'noy i Teoreticheskoy Fiziki, Vol 61, No 4(10), Oct 71, pp 1273-1275

Abstract: The purpose of this article is to show how the accuracy of these pulse measurements can be improved. Corrections which must be made to achieve this accuracy are based on results obtained in an earlier paper (A. I. Alikhanyan, et al, 12-ya Mezhdunarodnaya konferentsiya po fizike vysokikh energiy -- Twelfth International Conference on High-Energy Physics -- Dubna, 1964, 2, Atomizdat, 1966, p 303) and were derived from new equipment with better parameters. These involved a reduction in the total delay time of up to 230 ns for applying the high-voltage pulses to the chamber, a reduction of up to 2 ± 0.5 ns in the rise time of the high-voltage pulse, and a high degree of electric field uniformity at the edges of the chamber through the use of distributed resistances and capacitances. Tables of the characteristics of various types of chamber are given. Analysis of the errors shows that

1/2

APPROVED FOR RELEASE: 09/01/2001 CIA-RDP86-00513R002202010002-2"

"APPROVED FOR RELEASE: 09/01/2001 CIA-RDP86-00513R002202010002-2

.HANYAN, A. I. et al, Zhurnal Eksperimental'noy i Teoreti-
ɔskoy Fiziki, Vol 61, No 4(10), Oct 71, pp 1273-1275

The measurement accuracy of the new equipment is limited by the optical distortion. A table of corrections for these distortions is provided. Gratitude is expressed to V. N. Semenyushkin, N. I. Novikov, A. F. Pisarev, Yu. V. Kulikov, L. N. Strunov, and I. N. Golutvin for performing the required experiments in the OIYaI (Joint Institute of Nuclear Research). The authors are associated with the Yerevan Physical Institute.

2/2

APPROVED FOR RELEASE: 09/01/2001 CIA-RDP86-00513R002202010002-2"

"APPROVED FOR RELEASE: 09/01/2001 CIA-RDP86-00513R002202010002-2

AP9049813

UR 0431

PRIMARY SOURCE: Izvestiya. AN ArmSSR. Fizika, Vol 4, Nr 1, pp 46-52

14
5
1
20

SHOWER EFFICIENCY OF SPARK CHAMBERS AT LONG HIGH VOLTAGE PULSE DELAY

N. Kh. BOSTANDJIAN, G. H. MARIKIAN and K. A. MATEVOSYAN

The shower efficiency of spark chamber filled with „specially pure" neon gas or mixed with Ne+alcohol vapour is determined. It is found that the greater the per cent of alcohol vapour in the chamber, the faster the shower efficiency of the spark chamber decreases as the delay of high voltage pulse increases. This phenomenon is more noticeable after the uninterrupted work of the chamber.

ab

1/1

1948 0124

19

APPROVED FOR RELEASE: 09/01/2001 CIA-RDP86-00513R002202010002-2"

"APPROVED FOR RELEASE: 09/01/2001 CIA-RDP86-00513R002202010002-2

Acc. Nr: AP0041510 Abstracting Service: CHEMICAL ABST. Ref. Code: UR0366

7170

89931m Chemistry of free radicals of the hydrazine series. IX. Synthesis and properties of some hydrazinoformazans. Rybakova, Yu. A.; Lipatova, L. E.; Matevosyan, R. O. (Ural. Lesotekh. Inst., Sverdlovsk, USSR). Zh. Org. Khim. 1970, 6(1), 182-4 (Russ). The condensation of $PhCH:NNH_2$ with $Ph_2NNHC_6H(NO_2)_2Cl$-2,4,6,3 gave $Ph_2NNHC_6H(NO_2)_2NHN:CNPh$-2,4,6,3 (I). The addn. of $4\text{-}XC_6H_4N_2Cl$ (X = H or Cl) in aq. HCl–$NaNO_2$ mixt. to cooled I gave a ppt. of $Ph_2NNHC_6H(NO_2)_2(NHN:CPhN:NC_6H_4X\text{-}4)$-2,4,6,3 (II). Uv and ir spectra of II are compared with the spectra of the related formazans. CPJR

REEL/FRAME
19751378

APPROVED FOR RELEASE: 09/01/2001 CIA-RDP86-00513R002202010002-2"

"APPROVED FOR RELEASE: 09/01/2001 CIA-RDP86-00513R002202010002-2

USSR

UDC 621.746.5:669.14.018.621

MANOKHIN, A. I., MATEVOSYAN, YE. P., KUL'KOVA, M. N., RUBENCHIK, A. YE., and BELYAKOVA, K. V., Central Scientific Research Institute of Ferrous Metallurgy and Krasnyy Oktyabr' Plant

"Nonmetallic Inclusions and Excess Phases in Steel Kh23N18 From Continuous and Conventional Pouring"

Moscow, Stal', No 10, Oct 73, pp 932-934

Abstract: The formation and distribution of nonmetallic inclusions (oxides, sulfides) and excess phases (carbides of the type $Me_{23}C_6$ and Me_7C_3) depend on crystallization conditions. It was established in a study of continuous (175 x 600-mm cross section) and conventional (4.1-ton) ingots of Kh12N18 steel, produced at the Krasnyy Oktybar' Plant and at the Central Scientific Research Institute of Ferrous Metallurgy, that, in the first case, the nonmetallic inclusions and excess phases were distributed along the cross section and height of an ingot in a more uniform manner and their number as a whole was less. A continuously cast steel is somewhat more contaminated with oxides than steel poured in the conventional manner (mainly coarse exogenic inclusions the entry of which can be prevented by better organization of the continuous casting process). Two figures, two tables, five bibliographic references.

1/1

APPROVED FOR RELEASE: 09/01/2001 CIA-RDP86-00513R002202010002-2"

"APPROVED FOR RELEASE: 09/01/2001 CIA-RDP86-00513R002202010002-2

USSR

UDC 621.314.57

FOKIKARPOV, A. G., GOLIKOV, V.YU., MATEYEV, A. S.

"Bridge Converters Based on Thyristors, the Commutating Circuit of Which Contains Nonlinear Inductance"

Dokl. nauchno--tekhn. konferentsii po itogam nauchno--issled. rabot za 1968--1969 gg. Mosk. energ. in-t, 1970 g. Sekts. Elektron. tekhniki. Promekts. Prim. elektroniki (Report of the Scientific--Technical Conference on the Results of Scientific--Research Work during 1968--1969. Moscow Power Institute, 1970. Electronic Technology Section. Industrial Electronics Subsection), Moscow, 1969, pp 101-106 (from RZh--Elektronika i yeye primeneniye, No 5, May 70, Abstract No 5B566)

Translation: A circuit is considered for a d-c breaker, in which a choke coil with a rectangular hysterisis loop, and a linear choke coil and capacitor are connected in series with the thyristor and parallel to the load. At turn-on of the thyristor, saturation of the core of the nonlinear choke coil and subsequently the oscillatory charge of the capacitor occurs through the linear inductivity. Computed relationships are cited. As example of applications, circuits of a bridge single--phase inverter and a pulse regulator are given. 3 ill. 2 ref. I.R.

1/1

APPROVED FOR RELEASE: 09/01/2001 CIA-RDP86-00513R002202010002-2"

"APPROVED FOR RELEASE: 09/01/2001 CIA-RDP86-00513R002202010002-2

UNCLASSIFIED PROCESSING DATE--23OCT70

1/2 012

TITLE--THREE DIMENSIONAL RELATIVISTIC EQUATIONS FOR A SYSTEM OF TWO PARTICLES WITH UNEQUAL MASSES -U-

AUTHOR-(03)-KADYSHEVSKIY, V.G., MATEYEV, M.D., MIRKASIMOV, R.M.

COUNTRY OF INFO--USSR

SOURCE--YAD. FIZ. 1970, 11(3), 692-700

DATE PUBLISHED--------70

SUBJECT AREAS--PHYSICS

TOPIC TAGS--RELATIVISTIC PARTICLE, PARTICLE MOTION, SCHROEDINGER EQUATION, PARTICLE INTERACTION

CONTROL MARKING--NO RESTRICTIONS

DOCUMENT CLASS--UNCLASSIFIED

PROXY REEL/FRAME--1992/0377 STEP NO--UR/0367/70/011/003/0692/0700

CIRC ACCESSION NO--AP0111570

UNCLASSIFIED

APPROVED FOR RELEASE: 09/01/2001 CIA-RDP86-00513R002202010002-2"

"APPROVED FOR RELEASE: 09/01/2001 CIA-RDP86-00513R002202010002-2

UNCLASSIFIED PROCESSING DATE--23OCT70

2/2 012

CIRC ACCESSION NO--AP0111570

ABSTRACT/EXTRACT--(U) GP-0- ABSTRACT. THE RELATIVISTIC QUASI POTENTIAL EQUATION IS GENERALIZED IN THE CASE OF PARTICLES WITH UNEQUAL MASSES. THE RELATIVISTIC 2 BODY PROBLEM CAN BE REDUCED TO THE PROBLEM OF MOTION OF A PARTICLE WITH A MASS EQUAL TO THE GEOMETRIC MEAN OF THE 2 MASSES IN A QUASI POTENTIAL FIELD. THE LIPPMAN-SCHWINGER EQUATION IS DERIVED FOR THE CASE OF UNEQUAL MASS; THE RELATIVISTIC SCHROEDINGER EQUATION FOR GAMMA PRESENTATION IS GIVEN. FACILITY: OB'EDIN. INST. YAD. ISSLED., DUBNA, USSR.

UNCLASSIFIED

APPROVED FOR RELEASE: 09/01/2001 CIA-RDP86-00513R002202010002-2"

"APPROVED FOR RELEASE: 09/01/2001 CIA-RDP86-00513R002202010002-2

USSR UDC: 53.083.8

YEMEL'YANOV, S. V., Corresponding Member of the USSR Academy of Sciences; MATICH, B. P., Doctor of Technical Sciences; and KOSTYLEVA, N. Ye., Candidate of Technical Sciences

"Universal Unified System for Controlling a Variable Structure, Part 1"

Moscow, Pribory i Sistemy Upravleniya, No 12, 1973, pp 8-17

Abstract: This article is the first installment in a detailed description of SUPS, the transliterated Russian acronym for "system for controlling a variable structure." The system is the result of a decision of the Goskomitet on Science and Technology of the USSR Council of Ministers calling for the cooperation of the Institite of Management Problems and the Yugoslav enterprise "Energoinvest" to cooperate on a solution to the problem of automating the lower hierarchical level in industry. The contract under which the system was developed covered the period of 1969-1973. The documentation for the technical aspects of the system is outlined and the names of the leading designers are given. Also shown are

1/2

APPROVED FOR RELEASE: 09/01/2001 CIA-RDP86-00513R002202010002-2"

"APPROVED FOR RELEASE: 09/01/2001 CIA-RDP86-00513R002202010002-2

USSR

UDC: 53.083.8

YEMEL'YANOV, S. V., et al, Pribory i Sistemy Upravleniya, No 12, 1973, pp 8-17

diagrams of the symbol classification for local control systems and problems of lower hierarchy automation and a full-page block diagram with textual explanation of the SUPS information system. Photographs of some of the units in the system are also supplied, together with explanatory block diagrams. A bibliography of 25 titles is appended.

2/2

APPROVED FOR RELEASE: 09/01/2001 CIA-RDP86-00513R002202010002-2"

"APPROVED FOR RELEASE: 09/01/2001 CIA-RDP86-00513R002202010002-2

AA0040762

UR 0482

1-70

Soviet Inventions Illustrated, Section I Chemical, Derwent,

241482 CONTROLLED ATMOSPHERE FURNACE SEALING involves connecting the inter-seal space or lock alternately to atmosphere and a neutral gas at known pressure. This seals the locks and prevent toxic gases escaping. In order to maintain gas pressure sufficient to prevent gas escape through the seal into the surrounding shop, the header (6) is coupled to the tank (13) filled with oil or water (14). The immersion depth of the tube (12) determines the optimum excess gas pressure in the lock so that by changing the immersion the optimum sealing conditions can be achieved. (15) checks gas pressure in the lock, so that excess gas can be syphoned off (16). Where short-supply or toxic gases are used, neutral gas can be valved (17) into the lock and held at less, more or equal pressure to that in the furnace itself. This counterpressure safely seals the furnace contents from the surrounding area.

12.2.68 as 1222511/22-1 [redacted] SHVEDOV, V.A.
(9.9.69) Bul 14/18.4.69. Class 18c. Int.Cl.C 21d.

19750454

APPROVED FOR RELEASE: 09/01/2001 CIA-RDP86-00513R002202010002-2"

"APPROVED FOR RELEASE: 09/01/2001 CIA-RDP86-00513R002202010002-2

AA0040762

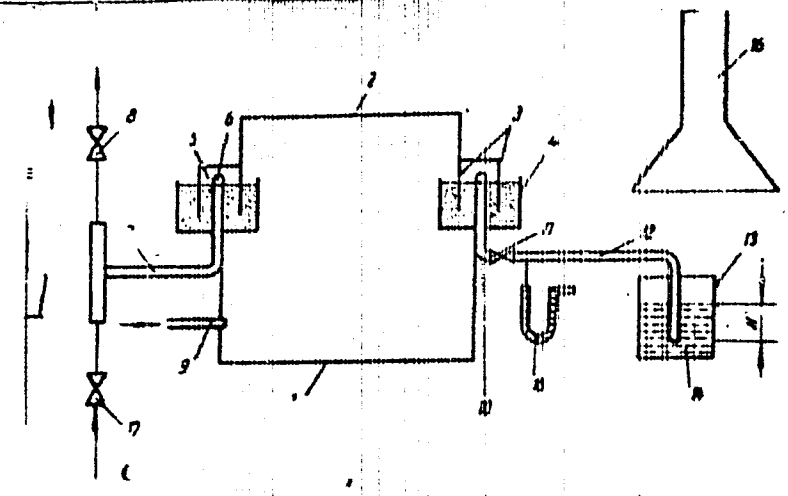

2/2

19750455

APPROVED FOR RELEASE: 09/01/2001 CIA-RDP86-00513R002202010002-2"

"APPROVED FOR RELEASE: 09/01/2001 CIA-RDP86-00513R002202010002-2

JPRS 59000
14 May 73

SECOND INTERNATIONAL CONGRESS ON HUNGARIAN LINGUISTICS

[Article by Doctor of Philological Sciences K. Ye. Maytinskaya, Moscow, Vestnik Akademii Nauk SSSR, Russian, No 3, March 1973, pp 91-94]

The Second International Congress on Hungarian Linguistics was held on 28-30 August 1972 in Szeged, Hungary. In contrast with the preceding meeting of scientists in Debrecen in 1966, the themes of this Congress were considerably narrower: it was proposed to discuss primarily problems of lexicology and stylistics. The urgency of these themes for Hungarian linguistics is unquestionable; in recent decades in Hungary intensive extensive work has been done on the compilation of various "language" dictionaries -- bilingual, defining, etymological, historical, and dialectological, the language of writers, etc -- in connection with these fundamental collective works a need has arisen for the solution of a number of practical and theoretical problems of lexicology, lexicography, semasiology, the stylistic use of words, etc.

Having accumulated enormous experience in the processing of varied and rich lexical material on their mother tongue, Hungarian specialists made a very successful appearance in the sessions. Their scientific findings were discussed at the plenary sessions by the Director of the Institute of Linguistics of the Hungarian Academy of Sciences L. Tamas, and also by scientific co-workers of the Institute S. Koroj and I. Satmari.

Of the scientific reports, of great interest were those devoted to general questions of historical lexicology. L. Benkö discussed the problem of the degree of reliability of the criteria used in the determination of etymologies. J. Gulya spoke about the need to take into consideration some general regularities of etymologization, for example, regularities of changes in the composition of dictionaries: in the opinion of the reporter the absence of an old word to designate some vitally important concept often is explained by loss of that word and replacement

MAYTINSKAYA, K. YE.

APPROVED FOR RELEASE: 09/01/2001 CIA-RDP86-00513R002202010002-2"

"APPROVED FOR RELEASE: 09/01/2001 CIA-RDP86-00513R002202010002-2

[illegible] A. Nyi illustrated the process "[illegible]" of words and their fusions with words of the Hungarian language inherited from the [illegible] community [illegible] from Slavic languages. [illegible] the regularities of [illegible] words and the acquisition of new ones, including ethnonyms. I. Szirmai drew important conclusions about the ethnic composition of the Hungarians at the end of the 9th century and their culture. I. Kiraly told what influence the development of society has on change of the lexicon.

Reports on the lexicology of the contemporary Hungarian language were heard with great interest. For some authors specific data have served as the material for broad generalizations. Thus, I. Kelemen turned attention toward the socially stimulated and individually used variants of the meanings of words. [illegible] investigated the semantic structure of proper names and [illegible] showed that there are [illegible] possibilities of [illegible] by [illegible] signs of classes of words in the semantic structure of words [illegible] Hungarian words.

The participants in the Congress heard a number of valuable presentations on questions of style. In particular, they became acquainted with the fine observations of L. Galdi regarding the style of the great Hungarian poet S. Petofi. L. Szucs traced the appearance and spread in Hungarian prose of such a stylistic method as the introduction of thieves' cant and youthful jargon into narratives; he determined that that method first found wide application in books of Eastern authors translated into Hungarian. D. Saynor (USA) pointed out changes in polite locutions which occurred in the Hungarian language in the period between the two world wars. Z. Szabo (Romania) and some other reporters noted the need to use computers and methods of structural linguistics in investigating the style of individual writers and poets, and F. Papp demonstrated the results of an experiment in the application of computers in similar investigations.

Several reports were devoted to analysis of the dialectal lexicon. P. N. Dimanets (USSR) characterized changes of semantics of Hungarian borrowings in the Ukrainian dialects of Transcarpathia. The purpose of the presentation of G. Penavin (Yugoslavia) was analysis of semantic processes in the lexicon of Hungarian dialects widespread in the northern regions of Yugoslavia. Tracing the fate of one popular etymology, E. Lorincz pointed out the role of context in the formation of popular etymologies.

Some reports and presentations were constructed on material from Finno-Ugrian languages related to Hungarian, as phenomena intrinsic to those languages, as a rule, also have parallels in Hungarian. Very instructive, for example, were the conclusions

APPROVED FOR RELEASE: 09/01/2001 CIA-RDP86-00513R002202010002-2"

"APPROVED FOR RELEASE: 09/01/2001 CIA-RDP86-00513R002202010002-2

[illegible] of L. Verte[illegible] [illegible] [illegible] in the [illegible] [illegible] A. [illegible] [illegible] [illegible] distinguished the semantic fields of [illegible] in the [illegible] language, terms similar to which can also be partially distinguished in the Hungarian language.

By decision of the organizers of the Congress, reports on phonetics and morphology [illegible] the principal themes of the Congress were all [illegible] [illegible] (USA) proposed a new scheme of [illegible] [illegible] Hungarian language. [illegible] compared [illegible] and [illegible] exploring future action in [illegible] in Hungarian and pointed out the need to determine the rules regulating the use of contemporary methods of expressing that grammatical meaning. The report of R. Austerlitz (USA) was devoted to analysis of the morphology of deictic (indicative) words in Hungarian. W. Schlachter (West Germany) compared constructions used in the Hungarian and German languages to express generality and belonging and found much in common in them (in spite of divergences in structure).

The results of the Congress showed that in many countries of Europe and America interest is growing in the study of the Hungarian language and questions of Hungarian linguistics.

APPROVED FOR RELEASE: 09/01/2001 CIA-RDP86-00513R002202010002-2"

"APPROVED FOR RELEASE: 09/01/2001 CIA-RDP86-00513R002202010002-2

1/2 025 UNCLASSIFIED PROCESSING DATE--30OCT70

TITLE--CERTAIN FEATURES OF HOLOGRAMS OF FOCUSED IMAGES -U-

AUTHOR-(02)-KLIMENKO, I.S., MATINYAN, YE.G.

COUNTRY OF INFO--USSR

SOURCE--OPTIKA I SPEKTROSKOPIIA, VOL. 18, MAR. 1970, P. 556-560

DATE PUBLISHED----MAR70

SUBJECT AREAS--PHYSICS

TOPIC TAGS--HOLOGRAPHY, OPTIC IMAGE, ILLUMINATION, WAVE FRONT

CONTROL MARKING--NO RESTRICTIONS

DOCUMENT CLASS--UNCLASSIFIED

PROXY REEL/FRAME--1996/1564 STEP NO--UR/0051/70/028/000/0556/0560

CIRC ACCESSION NO--AP0118547

UNCLASSIFIED

APPROVED FOR RELEASE: 09/01/2001 CIA-RDP86-00513R002202010002-2"

"APPROVED FOR RELEASE: 09/01/2001 CIA-RDP86-00513R002202010002-2

2/2 025 UNCLASSIFIED PROCESSING DATE--30OCT70

CIRC ACCESSION NO--AP0118547

ABSTRACT/EXTRACT--(U) GP-0- ABSTRACT. CONSIDERATION OF THE SPECIAL FEATURES OF WAVEFRONT RECONSTRUCTION WITH THE AID OF HOLOGRAMS OF FOCUSED IMAGES ILLUMINATED BY WHITE LIGHT. IT IS SHOWN THAT THE POSSIBILITY OF IMAGE RECONSTRUCTION IN WHITE LIGHT IS GOVERNED BY THE FACT THAT DURING A CHANGE IN THE WAVELENGTH OF THE RECONSTRUCTING RADIATION THE IMAGE SCALE AND THE LOCALIZATION PLANE REMAIN UNCHANGED. A STUDY IS MADE OF THE EFFECT OF THE DEGREE OF SPATIAL COHERENCE OF THE RECORDING RADIATION ON THE CONDITIONS OF RECONSTRUCTING IN WHITE LIGHT SPECTRALLY COLORED AND SINGLE COLOR IMAGES.

UNCLASSIFIED

APPROVED FOR RELEASE: 09/01/2001 CIA-RDP86-00513R002202010002-2"

"APPROVED FOR RELEASE: 09/01/2001 CIA-RDP86-00513R002202010002-2

1/2 012 UNCLASSIFIED PROCESSING DATE--04DEC70

TITLE--UPPER LIMIT OF THE COMPLEXING OF C SUB10-C SUB17 NORMAL ALKANES IN BINARY MIXTURES -U-

AUTHOR--MATISHEV, V.A.

COUNTRY OF INFO--USSR

SOURCE--KHIM. TEKHNOL. TOPL. MASEL 1970, 15(6), 26-30

DATE PUBLISHED--------70

SUBJECT AREAS--CHEMISTRY

TOPIC TAGS--ALKANE, UREA, ORGANIC COMPLEX COMPOUND, NOMOGRAPH, TEMPERATURE DEPENDENCE

CONTROL MARKING--NO RESTRICTIONS

DOCUMENT CLASS--UNCLASSIFIED

PROXY FICHE NO----FD70/605012/E06 STEP NO--UR/0065/70/015/006/0026/0030

CIRC ACCESSION NO--AP0140312

UNCLASSIFIED

APPROVED FOR RELEASE: 09/01/2001 CIA-RDP86-00513R002202010002-2"