"APPROVED FOR RELEASE: 09/01/2001 CIA-RDP86-00513R002202020003-0

MEL'NIKOV, N. P., Konstruktivnyye formy i metody rascheta YaR, Second Edition, Revised and Enlarged, Moscow, Atomizdat, 1972, 552 pp, ill., 5 r., 27 kop.

calculating perforated plates, thick-walled vessels, brittle breakdown, etc., the book includes new sections concerning the effect of radiation on the embrittlement of steels, computational techniques, stress concentration in the tube zone of spherical shells of nuclear reactors, special features of the calculation for thermal fatigue and creep, and also on the selection of austenite stainless steels suitable for reactor construction.

2/2

APPROVED FOR RELEASE: 09/01/2001 CIA-RDP86-00513R002202020003-0"

"APPROVED FOR RELEASE: 09/01/2001 CIA-RDP86-00513R002202020003-0

1/2 024 UNCLASSIFIED PROCESSING DATE--11NOV70

TITLE--ANTENNA STRUCTURES -U-

AUTHOR--MELNIKOV, N.P.

M

COUNTRY OF INFO--USSR

SOURCE--ANTENNYYE SOORUZHENIYA, MOSCOW, ZNANIYE, 1969, 48 PP

DATE PUBLISHED-------70

SUBJECT AREAS--BEHAVIORAL AND SOCIAL SCIENCES, ELECTRONICS AND ELECTRICAL ENGR.

TOPIC TAGS--ANTENNA SUPPORT, RADIO TELESCOPE ANTENNA, STATE PRIZE

CONTROL MARKING--NO RESTRICTIONS

DOCUMENT CLASS--UNCLASSIFIED

PROXY REEL/FRAME--3006/0016 STEP NO--UR/0000/69/000/000/0001/0048

CIRC ACCESSION NO--AM0133906

UNCLASSIFIED

APPROVED FOR RELEASE: 09/01/2001 CIA-RDP86-00513R002202020003-0"

"APPROVED FOR RELEASE: 09/01/2001 CIA-RDP86-00513R002202020003-0

2/2 024 UNCLASSIFIED PROCESSING DATE--13NOV70

CIRC ACCESSION NO--AM0133906

ABSTRACT/EXTRACT--(U) GP-0- ABSTRACT. TABLE OF CONTENTS. SELECTION OF THE TYPE OF ANTENNA STRUCTURES 3. TOWERS 6. MASTS 21. RADIOTELESCOPES 31. NEW IDEAS AND POSSIBILITIES IN THE DEVELOPMENT OF ANTENNA STRUCTURES 44. THE AUTHOR OF THIS BOOKLET, DOCTOR OF TECHNICAL SCIENCES, PROFESSOR N. P. MEL'NIKOV, ONE OF THE LEADING SCIENTISTS OF THE COUNTRY IN THE FIELD OF METAL STRUCTURES, IS THE DIRECTOR OF THE INSTITUTE "TSNIIPROYEKTSTAL'KONSTRUKTSIYA". HE DIRECTED NUMEROUS MAJOR SCIENTIFIC RESEARCH PROJECTS AND THE CONSTRUCTION OF STEEL STRUCTURES OF GLASS FURNACES, OPEN HEARTH FURNACES, OXYGEN CONVERTERS, ROLLING AND OTHER MILLS, INDUSTRIAL BUILDINGS, RESERVOIRS, GAS GOLDERS, ANTENNA STRUCTURES, ETC. FOR THE DEVELOPMENT OF NEW STRUCTURAL FORMS OF BUILDINGS AND SPECIAL STRUCTURES, N. P. MEL'NIKOV WAS AWARDED FOUR TIME THE TITLE OF THE STATE PRIZE LAUREATE AND RECEIVED MANY ORDERS AND MEDALS.

UNCLASSIFIED

APPROVED FOR RELEASE: 09/01/2001 CIA-RDP86-00513R002202020003-0"

"APPROVED FOR RELEASE: 09/01/2001 CIA-RDP86-00513R002202020003-0

USSR

UDC 612.018.2-612.4597-07

GYULLING, E. V., Candidate of Medical Sciences, KAVSAN, V. H., Candidate of Biological Sciences, MEL'NIKOV, O. F., NIKOL'SKIY, I. S., and SEREBRYANYY, S. B., Doctor of Chemical Sciences, Kiev Scientific Research Institute of Otolaryngology, and Sector of Molecular Biology and Genetics, Academy of Sciences USSR

"Possible Regulation of the Immunological Activity of the Lymphoid System by Thymus Factors. 1. Stimulation of Antibody Formation by Calf Thymus Extract Fractions Obtained by Means of Sephadex G-25"

Kiev, Zhurnal Ushnykh Nosovykh i Gorlovykh Bolezney, No 6, 1971, pp 25-27

Abstract: The crude extract of the thymus gland has no biological activity. However, when the acetone-insoluble extract of calf thymus is separated into three fractions by means of gel filtration through Sephadex G-25, the first two fractions stimulate immunogenesis in newborn mice, that is, 15 microgram thymus protein doses injected subcutaneously increase the number of antibody-producing cells in the spleen and the weight of the spleen. It was concluded that the crude thymus extract contains stimulating and inhibiting factors and that after Sephadex filtration the latter remain in the third fraction. It is suggested that the purified stimulating factors might be useful in treating diseases developing as a result of immunological insufficiency.

1/1

APPROVED FOR RELEASE: 09/01/2001 CIA-RDP86-00513R002202020003-0"

"APPROVED FOR RELEASE: 09/01/2001 CIA-RDP86-00513R002202020003-0

USSR UDC: 546.681'181:539.238

BOLKHOVITYANOV, Yu. B., BOLKHOVITYANOVA, R. I., MEL'NIKOV, P. L.

"Production of Thin Films of GaAs from Solution Located in a Gap Between Substrates"

Moscow, Izvestiya Akademii Nauk SSSR, Neorganicheskiye Materialy, No 6, Jun 73, pp 887-890.

Abstract: The authors used the sandwich method of production of a thin layer of solution by drawing it between two parallel substrates. The boat containing the solution in its opposite end was heated to the epitaxial temperature and held there for one hour to saturate the solution, after which the boat was tipped and the solution, after contacting the substrates, was drawn into the interval between them by capillary force. The boat was then tipped back to pour the remaining portion of the solution back to its initial position. The gap width varied from 0.2 to 1.5 mm. The system was then cooled linearly. Layers of GaAs produced by this method were smooth, with thickness variation not over 10%. The assumption that the GaAs precipitated only from the solution onto the substrate during the programmed cooling period was justified. The GaAs, dissolved in gallium, was completely deposited on the substrate when the cooling rate was held at 20-35° per hour.

1/1

APPROVED FOR RELEASE: 09/01/2001 CIA-RDP86-00513R002202020003-0"

"APPROVED FOR RELEASE: 09/01/2001 CIA-RDP86-00513R002202020003-0

JPRS 59208
6-73

XIII-5. ORIENTATION FUNCTION OF THE PROPERTIES OF GALLIUM ARSENIDE FILMS OBTAINED BY THE METHOD OF LIQUID EPITAXY

[Article by Yu. B. Bolkhovityanov, R. I. Bolkhovityanova, S. I. Gresov, Ye. I. Gutorov, E. L. Mel'nikov, Novosibirsk; Novosibirsk, III Simpozium po Protsessam Rosta i Sintezu Poluprovodnikovykh Kristallov i Plenok, Russian, 11-13 June 1972, p 184]

Studies were made of the electron concentration and mobility in gallium arsenide films as a function of the substrate orientation. The substrate orientation was varied from (100) to (011) every 5°. It was discovered that the electron concentration in the films in the entire range of deviations varies by no more than 3 times. The highest rate of variation of the film properties is observed for deviation of the substrates from (111) both to (011) and to (100) by small angles. On deviation of the substrates from (100) to (111) by 5-10°, the electrophysical properties of the film vary insignificantly.

MEL'NIKOV, P.L.

APPROVED FOR RELEASE: 09/01/2001 CIA-RDP86-00513R002202020003-0"

"APPROVED FOR RELEASE: 09/01/2001 CIA-RDP86-00513R002202020003-0

JPRS 59208

6-73

3

XIII-2. EPITAXY OF GALLIUM ARSENIDE FILMS FROM SOLUTION BETWEEN SUBSTRATES

[Article by Yu. S. Bolkhovityanov, R. I. Bolkhovityanova, P. L. Mel'nikov: Novosibirsk, III Simpozium po Protsessam Rosta i Sinteza Poluprovodnikovykh Kristallov i Plenok, Russian, 12-17 June 1972, p 183]

A study was made of a method of growing gallium arsenide films from solution in a thin gap between substrates analogously to that described by Panish and Sumski [1]. However, a saturated solution is first pulled into the gap. The procedure was realized structurally in the Nelson version [2].

A study was made of the basic advantages of this epitaxy procedure. The possibility of controlled growth of films of different thickness from units to hundreds of microns is demonstrated.

Calculations are made which on the basis of the known diagram of state of the gallium arsenide and solvent permit determination of the film thickness. The experimental results agree with the calculation.

The film surface morphology was investigated as a function of the cooling rate, the height of the solution layer on the substrate and also its orientation in the range of planes of (100)-(111A)-(011).

BIBLIOGRAPHY

1. M. B. Panish, S. Sumski, USA Patent No 3533856, published 13 October 1970

2. H. Nelson, RCA Rev, Vol 24, No 4, 603, 1963.

MEL'NIKOV, P.L.

APPROVED FOR RELEASE: 09/01/2001 CIA-RDP86-00513R002202020003-0"

"APPROVED FOR RELEASE: 09/01/2001 CIA-RDP86-00513R002202020003-0

1/2 030 UNCLASSIFIED PROCESSING DATE--04DEC70

TITLE--PROTECTIVE GALVANIC COATINGS OF GOLD ALLOYS OF INCREASED HARDNESS AND WEAR RESISTANCE -U-

AUTHOR--MELNIKOV, P.S.

COUNTRY OF INFO--USSR

SOURCE--ZASHCH. METAL. 1970, 6(3), 265-7

DATE PUBLISHED--------70

SUBJECT AREAS--MATERIALS, MECH., IND., CIVIL AND MARINE ENGR

TOPIC TAGS--GOLD ALLOY, WEAR RESISTANCE, SILVER, COPPER ALLOY, TECHNICAL STANDARD, MECHANICAL PROPERTY, METAL CORROSION, METAL GALVANIZATION, ELECTRODEPOSITION

CONTROL MARKING--NO RESTRICTIONS

DOCUMENT CLASS--UNCLASSIFIED

PROXY REEL/FRAME--3008/1049 STEP NO--UR/0365/70/006/003/0365/0367

CIRC ACCESSION NO--AP0138071

APPROVED FOR RELEASE: 09/01/2001 CIA-RDP86-00513R002202020003-0"

"APPROVED FOR RELEASE: 09/01/2001 CIA-RDP86-00513R002202020003-0

2/2 030 UNCLASSIFIED PROCESSING DATE--04DEC70

CIRC ACCESSION NO--AP0138071

ABSTRACT/EXTRACT--(U) GP-0- ABSTRACT. COATINGS OF AU-AG-CU ALLOYS WERE INVESTIGATED. THE BATH HAD A PERFORATED BELL ROTATING AT 30 RPM AT A 30DEGREE ANGLE TO THE ELECTROLYTE MIRROR AND THE ANODE WAS OF AU (GOST 6837-54). THE RATIO OF ANODE TO CATHODE SURFACE WAS 1:5. THE AREA OF THE ARTICLES LOADED IN THE BELL AND THE VOL. OF THE ELECTROLYTE IN THE BATH WERE, RESP., 5 DM PRIME2 AND 5 L. UNDER LAB. CONDITIONS AND 25 CM PRIME2 AND 50 L. UNDER INDUSTRIAL CONDITIONS. MECH. AND CORROSION PROPERTIES OF THE COATINGS DEPEND ON C.D., COMPN., AND TEMP. OF THE ELECTROLYTE, AND CONTENT OF ALLOYING ADDITIVES IN THE ELECTROLYTE AND THE COATING. WHEN THE COATING CONTAINED AG 0.5 AND CU 0.2PERCENT THE STRENGTH WAS 140-5 KG-MN PRIME2. FOR AN ALLOY CONTG. AG 1.5-2, CU 0.7-1PERCENT THIS WAS 175-85 KG-MN PRIME2. THE OPTIMAL CONDITIONS FOR OBTAINING A COATING OF THE COMPN. AU 97-9, AG 0.5-2, CU 0.2-1 WT. PERCENT ARE GIVEN. THE 2-3 MU COATING OF THE AU-AG-CU ALLOY HAS ALL THE PROPERTIES AND QUALITIES AND CAN VERY WELL REPLACE 5-6 MU COATING OF PURE AU.

UNCLASSIFIED

APPROVED FOR RELEASE: 09/01/2001 CIA-RDP86-00513R002202020003-0"

"APPROVED FOR RELEASE: 09/01/2001 CIA-RDP86-00513R002202020003-0

USSR

UDC: 621.396.677.71

KOVALEV, I. S., MATYUKOV, G. F., MEL'NIKOV, V. A.

"Effect of Frequency Variation on the Polar Pattern of a Slotted Strip Antenna"

Minsk, Novyye razrabotki elementov radiotekhn. ustroystv--sbornik (New Developments in Elements for Electronic Equipment--collection of works), vyp. 1, "Vysheysh. shkola", 1972, pp 140-143 (from RZh-Radiotekhnika, No 12, Dec 72, abstract No 12B27 [résumé])

Translation: The article gives the results of a study of the operation of a linear slotted strip antenna with traveling-wave supply. On the basis of the ideas of antenna theory an expression is derived for the angle of inclination of the main lobe from the normal as a function of frequency. A comparison is made with a slot array in a rectangular waveguide. Two illustrations, bibliography of two titles.

1/1

APPROVED FOR RELEASE: 09/01/2001 CIA-RDP86-00513R002202020003-0"

"APPROVED FOR RELEASE: 09/01/2001 CIA-RDP86-00513R002202020003-0

USSR UDC 621.762.001

MAKAROV, V. I., MEL'NIKOV, V. A., GALAT, N. I., and KUKOZ, F. I.

"Magnetic Properties of Powders and Their Electrochemical Activity"

Tr. Novocherk. politekhn. in-ta (Works of the Novocherkassk Polytechnical Institute), 1970, 208, pp 100-103 (from RZh-Metallurgiya, No 11, Nov 70, Abstract No 11G296)

Translation: A study is made of the dependence of electrochemical properties (capacity) of electrodes, prepared from iron-nickel active masses (AM), on the imperfections of the crystalline structure of the AM components. The magnetic characteristics of AM (magnetic susceptibility $\chi_{эфф}$, coercive force H_c and residual magnetization I_R) are used as parameters which determine the degree of structural imperfections. The results of measurements reveal the presence of magnetic-electrochemical characteristics of AM relation. The higher the values of $\chi_{эфф}$ and I_R, the more imperfect is the crystal lattice of the AM components and the higher the AM quality. The possibility exists of determining the AM quality on the basis of the results of magnetic measurements. V. Kvin

1/1

APPROVED FOR RELEASE: 09/01/2001 CIA-RDP86-00513R002202020003-0"

"APPROVED FOR RELEASE: 09/01/2001 CIA-RDP86-00513R002202020003-0

USSR UDC: 621.374.73(088.8)

MEL'NIKOV, V. F., KRUTIN, V. S., KOZEL'CHIKOV, V. V., and ~~KORCLEV, B. G.~~

"Balanced Diode Regenerative Comparator"

Avt. sv. SSSR (Author's Certificate USSR) Class 21a[1], 36/18, (H 03 k 5/20), No. 272966, Application 1.08.67, Publication 10.09.70 (from RZh-Radiotekhnika, No. 3, March 71, Abstract No. 3A359P)

Translation: A balanced diode regenerative comparator, containing a comparison circuit of diodes and a blocking oscillator using a transistor triode. The comparator is distinguished in that, for the purpose of raising the duration of the output pulse, an additional winding of positive feedback, connected through a diode to the transistor base, is introduced. E. L.

1/1

APPROVED FOR RELEASE: 09/01/2001 CIA-RDP86-00513R002202020003-0"

"APPROVED FOR RELEASE: 09/01/2001 CIA-RDP86-00513R002202020003-0

USSR UDC 621.385.632

ALESKOVSKIY, A.H., ZAMOROZKOV, B.M., MELINIKOV, V.F., MURAV'YEV, A.A., RADYUK, O.M.

"Experimental Investigation Of Persistence Of Beam Plasma In TWT"

Elektron. tekhnika. Nauchno-tekhn. sb. Elektron. SVCh (Electronic Technology. Scientific-Technical Collection. Microwave Electronics), 1970, Issue 11, pp 59-63

Translation: The paper investigates the persistence of disintegrating beam plasma in a medium-power traveling-wave tube, with the object of detecting possible distortions of the information on the structure of the beam by use of the photoregistration method. It is established that in the region where glow fills all the flight channel, distortions are possible, caused by the appearance in the beam of slow secondary electrons. 2 ref. Summary.

1/1

APPROVED FOR RELEASE: 09/01/2001 CIA-RDP86-00513R002202020003-0"

"APPROVED FOR RELEASE: 09/01/2001 CIA-RDP86-00513R002202020003-0

USSR

UDC: 621.762+620.194.3+661.322

KOLOBOV, YU. M., LYALIN, YE. V. and MEL'NIKOV, V. G., Ivanova Institute of Chemical Technology

"Study of the Wear Resistance of Metal-Glass Materials in Friction in Aqueous Solutions of Caustic Soda"

Kiev, Poroshkovaya Metallurgiya, No 12, Dec 73, pp 81-84

Abstract: The wear resistance of iron-based sintered materials with 1-10 wt.% BBC glass, graphite and molybdenum disulfide was studied in 5-35% aqueous solutions of caustic soda. The possibility is shown of using metal-glass materials as antifriction materials for friction bearings operating in aqueous solutions of caustic soda. The optimal content of glass is determined, corresponding to the minimum wear and coefficient of friction for the test conditions selected.

1/1

APPROVED FOR RELEASE: 09/01/2001 CIA-RDP86-00513R002202020003-0"

"APPROVED FOR RELEASE: 09/01/2001 CIA-RDP86-00513R002202020003-0

USSR

UDC 629.7.036.3-55.001.4

MEL'NIKOV. V. G. and RUDYKO, V. I.

"Test Stand for Testing Jet Engine Regulators"

USSR Author's Certificate No 345400, filed 18 Dec 70, published 3 Aug 72 (from RZh-34. Aviatsionnyye i Raketnyye Dvigateli, No 4, Apr 73, Abstract No 4.34.92 P)

Translation: A test stand is patented for testing jet engine regulators. The test stand contains a computer and the tested regulator with automatic start and fuel distributor. The unit differs from others in that the electropneumo-converter is connected to the automatic start unit in order to improve the quality of testing, the distributor inlet is connected to its outlets by means of bypass lines with built-in electromagnetic valves, and the electropneumo-converter and the valves are connected to the computer for control with respect to a given program. Original article: 1 illus. Resume.

1/1

APPROVED FOR RELEASE: 09/01/2001 CIA-RDP86-00513R002202020003-0"

"APPROVED FOR RELEASE: 09/01/2001 CIA-RDP86-00513R002202020003-0

USSR UDC: 681.3.06:51

LAVRIV, Ya. M., MEL'NIKOV, V. G., POPOV, A. A., STARCHIK, V. P., YANENKO, V. M.

"Formation of an Information Block of Medical Documents in a Clinical Medical Information System"

V sb. Biol., med. kibernet. i bionika (Biology, Medical Cybernetics and Bionics--collection of works), vyp. 3, Kiev, 1970, pp 3-11 (from RZh--Kibernetika, No 7, Jul 71, Abstract No 7V720)

Translation: The existing practice of collecting and storing information in a public health system leads to redundant and partially erroneous data presented in handwritten form, inconvenient for analysis and formulation of a diagnosis. To effectively ensure public health functions, a medical information system is proposed which is a cybernetic system of the "man-automaton" type. The system includes the medical personnel who take care of collecting medical information on the appropriate standard form for the history of an illness as well as evaluating the results of information processing; the system also includes the mathematicians who develop the mathematical apparatus for collecting and processing data

APPROVED FOR RELEASE: 09/01/2001 CIA-RDP86-00513R002202020003-0"

"APPROVED FOR RELEASE: 09/01/2001 CIA-RDP86-00513R002202020003-0

LAVRIV, Ya. M. et al., Biol., med. kibernet. i bionika, vyp. 3, Kiev, 1970, pp 3-11

(create a flowchart and language for communication between the digital computer and man, algorithms and programs for processing medical information), and the engineering and technical personnel who service the technical facilities of the system. The authors note two approaches to solution of the problems of ensuring effective communication between the physician and the digital computer, and operational accumulation and transmission of information in a form to which the physician is accustomed: 1) development of a specialized medical logical information language, which requires formalizing the representation of the initial data, introducing correctives into the identification of terms, etc.; 2) development of a standardized form for the history of an illness as a preliminary stage to complete formalization. The principles of standardized forms for the history of an illness in the cardiological group are described. The form consists of an explanatory section (algorithms for examination of a patient for various illnesses) and a summarizing section (model or parameters of the state of the patient). An example of a fragment of a standardized form for the history of an illness is described ("Circulatory Organs"). A. Doroshenko.

APPROVED FOR RELEASE: 09/01/2001 CIA-RDP86-00513R002202020003-0"

"APPROVED FOR RELEASE: 09/01/2001 CIA-RDP86-00513R002202020003-0

USSR

UDC 539.375.6:620.193

MELNIKOV, V. G., Engineer, and LYALIN, Ye. V., Candidate of Technical Sciences

"The Corrosion Factor in the Process of Corrosion-Mechanical Wear of Cyanided Steels"

Moscow, Khimicheskoye i Neftyanoye Mashinostroyeniye, No 11, Nov 70, pages 29-30

Abstract: The corrosion resistance of the cyanided layer applied to friction surfaces of friction bearings was studied using steels selected because of their increased content of carbon and alloying elements. Corrosion tests were performed in solutions of NaOH of various concentrations. The studies showed that corrosion losses of cyanided steels increase only slightly with increasing solution concentration. The corrosion weight loss increased with increasing content of carbon in the steel. The presence of a small quantity of chromium in the steel noticeably increases the corrosion resistance of the layer, since the chromium nitrides formed are more corrosion resistant than iron nitrides.

1/1

APPROVED FOR RELEASE: 09/01/2001 CIA-RDP86-00513R002202020003-0"

"APPROVED FOR RELEASE: 09/01/2001 CIA-RDP86-00513R002202020003-0

USSR

UDC:620.17:669-419.4

ANDREYEVA, S. N., MEL'NIKOV, V. I. and RYZHENKO, V. I., Ukrainian Scientific Research Institute, Gidrougol', Voroshilovgrad

"Mechanical Properties of 30 + Kh12 Two-Layer Steel"

Metallovedeniye i Termicheskaya Obrabotka Metallov, No 2, 1974, pp 47-49

Abstract: The mechanical properties of the bimetal were studied in the 800-1200° C temperature interval at steps of 100°. Mechanical characteristics determined included strength σ_b, yield point $\sigma_{0.2}$ and relative reduction in area ψ. At 1050-1170° C, 30 + Kh12 two-layer steel can be pressure worked. The plastic deformation is distributed evenly, allowing stresses in the zone of joining of the two layers to be avoided. At heating rates of 20-80° C/sec, there is a narrow temperature interval such that when 30 + Kh12 steel is heated to this temperature with subsequent sharp cooling in water to 200-250° C, a wear-resistant metastable austenitic structure is produced in the cladding layer of Kh12 steel.

1/1

APPROVED FOR RELEASE: 09/01/2001 CIA-RDP86-00513R002202020003-0"

"APPROVED FOR RELEASE: 09/01/2001 CIA-RDP86-00513R002202020003-0

USSR UDC 622.24.053.6

MEL'NIKOV, V. I., ZHIDOVTSEV, N. A., LEVCHENKO, A. T., STARKOV, V. N., DEMCHUK, M. M., KOVAL'CHUK, P. P., and PODOBANYY, I. F.

"Test Results of a Wave Reflector"

Moscow, Bureniye -- Referativnyy Nauchno-Tekhnicheskiy Sbornik (Drilling -- Scientific and Technical Reference Collection of Works), No 1, 1973, pp 7-11

Abstract: Results are presented of tests conducted on a special arrangement of the bottom part of a drilling column, which possesses the capacity of reflecting the vibratory energy generated by the cutting bit. This arrangement, which constitutes an independent structure, is called a superbit wave reflector. The basic configurations of the design and operation of the reflector are described. The existence of the theoretically calculated resonance regime and entiresonance regime was confirmed experimentally. Results of operational tests demonstrated an improvement of drilling parameters in hard rock as a result of application of the reflector. 3 figures, 1 table, 2 references.

1/1

APPROVED FOR RELEASE: 09/01/2001 CIA-RDP86-00513R002202020003-0"

"APPROVED FOR RELEASE: 09/01/2001 CIA-RDP86-00513R002202020003-0

USSR

UDC 539.21

KUZ'MENKO, V. M., LAZAREV, B. G., MEL'NIKOV, V. I., and SUDOVTSOV, A. I.,
Physicotechnical Institute, Academy of Sciences Ukrainian SSR, Khar'kov

"Dependence of Amorphous-Crystalline Transition Temperature on Thickness of Metallic Layers Condensed at Liquid-Helium Temperature"

Kiev, Ukrainskiy Fizicheskiy Zhurnal, Vol 17, No 4, Apr 72, pp 682-683

Abstract: The article describes results of a study of the dependence of the amorphous-crystalline transition temperature on layer thickness d for a series of metals (iron, bismuth, ytterbium, beryllium, gallium) condensed on glass substrates cooled with liquid helium. It was found for iron, bismuth, and ytterbium that there is a smooth decline in T_t with an increase in thickness right up to the critical value, at which a discontinuous phase transition occurs at the condensation temperature (in the present case at the liquid-helium temperature). Similar variations are found in gallium and beryllium layers, but the phenomenon is complicated by their incomplete transition from the amorphous to the crystalline state, after which in the layers above the critical thickness there remain residues of the amorphous phase in the crystalline matrix formed. The function $T_t(d)$ is related to the thermodynamic peculiarities of the thin films.

1/1

APPROVED FOR RELEASE: 09/01/2001 CIA-RDP86-00513R002202020003-0"

"APPROVED FOR RELEASE: 09/01/2001 CIA-RDP86-00513R002202020003-0

USSR

UDC: 537.312.62

PAN, V. M., LATYSHEVA, V. I., SUDOVTSOV, A. I., MEL'NIKOV, V. I.

"On a Possible Reason for the High Critical Temperature of the Superconducting Compound $Nb_3Al_{0.8}Ce_{0.2}$"

V sb. Probl. sverkhprovodyashch. materialov (Problems of Superconducting Materials—collection of works), Moscow, "Nauka", 1970, pp 92-98 (from REh-Radiotekhnika, No 5, May 71, Abstract No 5D548)

Translation: The authors plot the isotherms of the cross section of the segment of the phase equilibria diagram of the niobium-aluminum-germanium system for niobium-rich alloys (up to 27.5 atomic percent aluminum and germanium) at 1700 and 1000°C. It is shown that the isomorphic compounds of Nb_3Al and Nb_2Ge form a continuous series of solid solutions at these temperatures. The form of the region of homogeneity of the phase β-$Nb_3Al_xGe_{1-x}$ is studied. It is shown that in the Nb_3Al-Nb_3Ge system (i. e. in the cross section of the niobium-aluminum germanium system with a constant niobium concentration of 75 atomic percent) the only single-phase alloys are those which have a concentration of no more than 5-7 atomic percent (the above mentioned concentrations of germanium correspond approximately to a ternary compound with the formula $Nb_3Al_{0.8}Ge_{0.2}$). It is also shown that the critical temperature of the phase β-$Nb_3Al_xGe_{1-x}$ increases (apparently according to a

1/2

APPROVED FOR RELEASE: 09/01/2001 CIA-RDP86-00513R002202020003-0"

"APPROVED FOR RELEASE: 09/01/2001 CIA-RDP86-00513R002202020003-0

PAN, V. M. et al., Probl. sverkhprovodyashch. materialov, Moscow, "Nauka", 1970, pp 92-98

parabolic law) with an increase in the germanium content in the phase under condition of retention of a high (at least stoichiometric, i. e. 25 atomic percent) total concentration of component B (i. e. %Al+%Ge). As soon as the total concentration of component B begins to decrease and becomes lower than the stoichiometric concentration, the critical temperature falls sharply. The form of the region of homogeneity of the phase β-$Nb_3Al_xGe_{1-x}$ determined in this work shows that the highest concentration of germanium at which stoichiometric composition of the phase is still realized (%Al+%Ge $\geqslant$ 25) is 5-7 atomic percent. Therefore it is clear that for this particular composition, which corresponds to the formula $Nb_3Al_{0.8}Ge_{0.2}$, the highest critical temperature should be and is observed. Six illustrations, bibliography of twenty titles. Authors' abstract.

2/2

APPROVED FOR RELEASE: 09/01/2001 CIA-RDP86-00513R002202020003-0"

"APPROVED FOR RELEASE: 09/01/2001 CIA-RDP86-00513R002202020003-0

USSR

UDC 669.293.017:537.312.62

PAN, V. M., LATYSHEVA, V. I., SUDOVTSOV, A. I., and MEL'NIKOV, V. I.

"A Possible Cause for the High Critical Temperature of the Superconducting Compound $Nb_3Al_{0.8}Ge_{0.2}$"

Problemy Sverkhprovodyashchikh Materialov [Problems of Superconducting Materials -- Collection of Works], Moscow, Nauka Press, 1970, pp 92-98

Translation: Isothermal cross-sections of a sector of the diagram of phase equilibria of the system niobium-aluminum-germanium are constructed for niobium-rich alloys (up to 27.5 at.% aluminum and germanium) at 1,700 and 1,000°C are constructed. It is demonstrated that at these temperatures the isomorphic compounds Nb_3Al and Nb_3Ge form a continuous series of solid solutions. The form of the area of homogeneity of the β-$Nb_3Al_xGe_{1-x}$ phase is studied. It is demonstrated that in the system Nb_3Al-Nb_3Ge (that is, in the cross-section of the niobium-aluminum-germanium system with constant niobium content 75 at.%), only those alloys which have a germanium concentration of not over 5-7 at.% are single-phase (these concentrations of germanium correspond approximately to the trinary compound with the formula $Nb_3Al_{0.8}Ge_{0.2}$).

1/2

APPROVED FOR RELEASE: 09/01/2001 CIA-RDP86-00513R002202020003-0"

"APPROVED FOR RELEASE: 09/01/2001 CIA-RDP86-00513R002202020003-0

USSR

PAN, V. M., et al., Problemy Sverkhprovodyashchikh Materialov [Problems of Superconducting Materials -- Collection of Works], Moscow, Nauka Press, 1970, pp 92-98

It is also demonstrated that the critical temperature of the β-$Nb_3Al_xGe_{1-x}$ phase increases (apparently according to a parabolic rule) with increasing content of germanium under the condition of retention high (not under stoichiometric, that is, 25 at.%) total concentration of component B (that is, % Al + % Ge). If the total concentration of component B begins to drop and falls below the stoichiometric level, the critical temperature drops sharply.

The form of the area of homogeneity of the β-$Nb_3Al_xGe_{1-x}$ phase determined in this work shows that the highest concentration of germanium at which the stoichiometric composition of the phase (% Al + % Ge $\geq$ 25) is still attained is 5-7 at.%. It is therefore clear that this composition, corresponding to the formula $Nb_3Al_{0.8}Ge_{0.2}$, should and does show the highest critical temperature. 6 figures; 20 biblio. refs.

2/2

APPROVED FOR RELEASE: 09/01/2001 CIA-RDP86-00513R002202020003-0"

"APPROVED FOR RELEASE: 09/01/2001 CIA-RDP86-00513R002202020003-0

Acc. Nr: AP0043586 Ref. Code: UR 0056

PRIMARY SOURCE: Zhurnal Eksperimental'noy i Teoreticheskoy Fiziki, 1970, Vol 58, Nr 2, pp 434-437

ON THE MINIMUM OF THE ELECTRICAL RESISTANCE OF IRON, COPPER, LUTETIUM AND THULIUM LAYERS OBTAINED BY LOW TEMPERATURE CONDENSATION

V. M. Kuzmenko, B. G. Lazaryev, A. I. Sudovtsov, V. I. Melnikov

The temperature dependence of the electrical resistance of Fe, Cu, Lu and Tu layers obtained by deposition of the vapor of the metals on a backing cooled by liquid helium is studied. In all freshly depositied layers a minimum of electrical resistance in observed in the region of 4 to 25° K. The temperature of the minimum is found to depend on the thickness of the metal and on its degree of annealing. As a rule, high temperature annealing results in the disappearance of the resistance minimum in the thicker layers. It is suggested that a new singularity of conductivity electron scattering may exist in strongly distorted metallic lattices.

1/1

REEL/FRAME 19762058

18 DI

APPROVED FOR RELEASE: 09/01/2001 CIA-RDP86-00513R002202020003-0"

"APPROVED FOR RELEASE: 09/01/2001 CIA-RDP86-00513R002202020003-0

USSR

UDC: 533.09.07

AUZINYA, L. K., ZAKE, M. V., MEL'NIKOV, V. K., and TSIYELENS, U. A.

"Phenomena of Emission from a Titanium Surface in Nonstationary Heating by an Argon-Air Current of a Low-Temperature Plasma"

Riga, Izvestiya Akademii Nauk Latviyskoy SSR -- Seriya Fizicheskikh i Tekhnicheskikh Nauk, No 4, 1973, pp 53-62

Abstract: Earlier papers by the authors of the present article (e.g., M. V. Zake, et al, Izv. AN LatvSSR, ser. fiz. i tekhn. nauk, No 2, 1970, p 81) have established that the electrical conductivity and radiation characteristics of high-temperature, gas-dispersed currents with titanium particles are determined chiefly by the phase and chemical transformations of the particles. Since there is a need for more detailed study of the mechanisms involved, the processes are studied in the present paper on stationary models under low-temperature plasma conditions. The results are given of a combined study of electron emission and radiation from the surface of titanium plates under nonstationary heating by an argon-air current of a low-temperature plasma. For these experiments, a special measuring device was prepared, consisting basically of plane-parallel electrodes, with the titanium plate as cathode and a

1/2

APPROVED FOR RELEASE: 09/01/2001 CIA-RDP86-00513R002202020003-0"

"APPROVED FOR RELEASE: 09/01/2001 CIA-RDP86-00513R002202020003-0

USSR

UDC: 533.09.07

AUZINYA, L. K., et al, Izvestiya Akademii Nauk Latviyskoy SSR -- Seriya Fizicheskikh i Tekhnicheskikh Nauk, No 4, 1973, pp 53-62

water-cooled copper plate as anode. Curves are plotted for the change in intensity of radiation from the surface of the titanium as a function of the heating time and of the temperature, for the changes in emission current as a function of the temperature, and for the work function of the surface as a function of the temperature. The results of the work function determination show that the kinetic emission at various stages of surface oxide formation must not be neglected in computations of the electrical characteristics of sputtering currents with metal particles.

2/2

APPROVED FOR RELEASE: 09/01/2001 CIA-RDP86-00513R002202020003-0"

"APPROVED FOR RELEASE: 09/01/2001 CIA-RDP86-00513R002202020003-0

USSR

355

UDC 533.601.1

Mel'nikov, V. K., Mel'nikov, Vl. K., Institute of Physics, Acad Sci Latvian SSR

"Mixing of a Coaxial High-Temperature Confined Jet"

Izvestiya Akademii Nauk Latviyskoy SSR, Seriya fizicheskikh i tekhnicheskikh nauk, No 6, 1971, pp 60-66

Results are given of an experimental investigation of the turbulent mixing of a high-temperature argon jet flowing into an air wake. Data are supplied on the distribution of velocity, temperature and concentration along the axis and in the cross section of the jet. The experimental results for the main part of the jet and the profile obtained from the equations for dimensionless velocity and temperature profile are plotted and show good agreement with theory with respect to the velocity profile, but not with respect to concentration and temperature. Thus this study of the flow field of a coaxial plasma jet (T_{ot} = 6,100 K and u_{ot} = 100 m/sec) of argon in a coflowing stream of air shows that the character of the change of the dimensionless velocity, temperature and concentration along the axis is analogous to a flow at subsonic velocity.

1/1

APPROVED FOR RELEASE: 09/01/2001 CIA-RDP86-00513R002202020003-0"

"APPROVED FOR RELEASE: 09/01/2001 CIA-RDP86-00513R002202020003-0

USSR

355

UDC 533.601.1

Mel'nikov, V. K., Mel'nikov, Vl. K., Institute of Physics, Acad Sci Latvian SSR

"Mixing of a Coaxial High-Temperature Confined Jet"

Izvestiya Akademii Nauk Latviyskoy SSR, Seriya fizicheskikh i tekhnicheskikh nauk, No 6, 1971, pp 60-66

Results are given of an experimental investigation of the turbulent mixing of a high-temperature argon jet flowing into an air wake. Data are supplied on the distribution of velocity, temperature and concentration along the axis and in the cross section of the jet. The experimental results for the main part of the jet and the profile obtained from the equations for dimensionless velocity and temperature profile are plotted and show good agreement with theory with respect to the velocity profile, but not with respect to concentration and temperature. Thus this study of the flow field of a coaxial plasma jet (T_{0t} = 6,100 K and u_{0t} = 100 m/sec) of argon in a coflowing stream of air shows that the character of the change of the dimensionless velocity, temperature and concentration along the axis is analogous to a flow at subsonic velocity.

1/1

APPROVED FOR RELEASE: 09/01/2001 CIA-RDP86-00513R002202020003-0"

"APPROVED FOR RELEASE: 09/01/2001 CIA-RDP86-00513R002202020003-0

1/2 047 UNCLASSIFIED PROCESSING DATE--30OCT70

TITLE--ELECTRICAL CONDUCTIVITY AND RADIATION OF A HIGH TEMPERATURE NITROGEN FLOW CONTAINING POLYDISPERSE MAGNESIUM AND ALUMINUM PARTICLES

AUTHOR-(05)-ZAKE, M., LEPIN, V., MELNIKOV, V.K., MILLERS, T., CIELENS, U.

COUNTRY OF INFO--USSR

SOURCE--LATV. PSR ZINAT. AKAD. VESTIS, FIZ. TEH. ZINAT. SER. 1970, (2), 73-9

DATE PUBLISHED--------70

SUBJECT AREAS--MATERIALS, CHEMISTRY

TOPIC TAGS--ELECTRIC CONDUCTIVITY, NITROGEN, MAGNESIUM, ALUMINUM, GAS FLOW, METAL POWDER, NITRIDE, OXIDE, HIGH TEMPERATURE EFFECT

CONTROL MARKING--NO RESTRICTIONS

DOCUMENT CLASS--UNCLASSIFIED

PROXY REEL/FRAME--1998/1339 STEP NO--UR/0371/70/000/002/0073/0079

CIRC ACCESSION NO--AP0121832

UNCLASSIFIED

APPROVED FOR RELEASE: 09/01/2001 CIA-RDP86-00513R002202020003-0"

"APPROVED FOR RELEASE: 09/01/2001 CIA-RDP86-00513R002202020003-0

2/2 047 UNCLASSIFIED

CIRC ACCESSION NO--AP0121832 PROCESSING DATE--30OCT70

ABSTRACT/EXTRACT--(U) GP-0- ABSTRACT. THE ELEC. COND., RADIATION, AND CHEM. COMPN. OF THE PRODUCTS FORMED FROM THE REACTION OF A HIGH TEMP. N FLOW WITH POLYDISPERSE PARTICLES OF MG AND AL AT 1200-3300DEGREESK WERE STUDIED. THE COND. OF THE N FLOW WITH MG AND AL PARTICLES STARTS INCREASING AT GAS TEMPS. OF 1600-1800 AND 2000DEGREESK, RESP. MG PARTICLES CHANGE THE ELEC. COND. OF THE FLOW WITH A DEPENDENCE SIMILAR TO THE EXPONENTIAL TYPE, WHEREAS AL PARTICLES SHOW A DEPENDENCE WITH A MAX. AT 2100 PLUS OR MINUS 100DEGREESK. THE CHARACTER OF THE CHANGE IN THE ELEC. COND. IS EXPLAINED ON THE BASIS OF EXISTING IDEAS ABOUT THE MECHANISM OF THE CHEM. REACTIONS OF MG AND AL WITH O. THE INTEGRAL RADIATION OF THE FLOW IS DETD. MAINLY BY THE CONCN. OF THE PARTICLES. THE PRINCIPAL PRODUCTS OF THE REACTION OF MG AND AL PARTICLES IN INDUSTRIAL N ARE OXIDES AND NITRIDES, AND THE AMTS. OF THESE COMPDS. ARE DETD. BY THE TEMP. OF THE FLOW. FACILITY: FIZ. ENERG. INST., RIGA, USSR.

UNCLASSIFIED

APPROVED FOR RELEASE: 09/01/2001 CIA-RDP86-00513R002202020003-0"

"APPROVED FOR RELEASE: 09/01/2001 CIA-RDP86-00513R002202020003-0

1/2 065 UNCLASSIFIED PROCESSING DATE--30OCT70

TITLE--ELECTRICAL CONDUCTIVITY AND RADIATION OF A HIGH TEMPERATURE NITROGEN FLOW CONTAINING POLYDISPERSE ZIRCONIUM AND TITANIUM PARTICLES

AUTHOR-(05)-ZAKE, M., LEPIN, V., MELNIKOV, V.K., MILLERS, T., CIELENS, U.

COUNTRY OF INFO--USSR

SOURCE--LATV. PSR ZINAT. AKAD. VESTIS, FIZ. TEH. ZINAT. SER. 1970, (2), 80-5

DATE PUBLISHED-------70

SUBJECT AREAS--CHEMISTRY, MATERIALS

TOPIC TAGS--NITROGEN, ZIRCONIUM, METAL POWDER, NITRIDE, ELECTRIC CONDUCTIVITY, IONIZATION, EXOTHERMIC REACTION, OXIDE, GAS FLOW, HIGH TEMPERATURE EFFECT, TITANIUM ALLOY

CONTROL MARKING--NO RESTRICTIONS

DOCUMENT CLASS--UNCLASSIFIED

PROXY REEL/FRAME--1998/1338 STEP NO--UR/0371/70/000/002/0080/0082

CIRC ACCESSION NO--AP0121831

UNCLASSIFIED

APPROVED FOR RELEASE: 09/01/2001 CIA-RDP86-00513R002202020003-0"

"APPROVED FOR RELEASE: 09/01/2001 CIA-RDP86-00513R002202020003-0

2/2 065 UNCLASSIFIED PROCESSING DATE--30OCT70

CIRC ACCESSION NO--AP0121831

ABSTRACT/EXTRACT--(U) GP-0- ABSTRACT. THE ELEC. COND., RADIATION, AND CHEM. COMPN. OF THE SOLID PRODUCTS FROMED FROM THE REACTION OF A HIGH TEMP. N FLOW WITH POLYDISPERSE PARTICLES OF ZR AND TI AT 2000-4000DEGREESK WERE STUDIED. THE PARTICLES OF THESE INFUSIBLE METALS AT SMALLER THAN OR EQUAL TO 3600-3900DEGREESK DAMP THE ELEC. COND. BECAUSE OF THE RECOMBINATION PROCESSES. SOME INCREASE IN THE ELEC. COND. OF THE GAS WITH METAL PARTICLES IS OBSD. ONLY AT SIMILAR TO 4000DEGREESK AND CONCN. OF PARTICLES 10PERCENT. HEAT GIVEN OUT AS A RESULT OF THE EXOTHERMIC REACTIONS DURING THE SLOW SURFACE INTERACTION WITH THE COMPONENTS OF THE FLOW IS INSUFFICIENT FOR THE IONIZATION OF THE GAS BY THE PARTICLES. THE PROCESS OF IONIZATION MAY POSSIBLY TAKE PLACE ABOVE THE B.P. OF THE PARTICLES, I.E., AT LARGER THAN 3500DEGREES AND 4650DEGREESK, RESP., FOR TI AND ZR. THE INTEGRAL RADIATION OF THE FLOW IS DETD. BY THE CONCN. OF THE PARTICLES. THE BASIC PRODUCTS OF THE REACTION OF ZR AND TI PARTICLES IN INDUSTRIAL N ARE OXIDES AND NITRIDES, AND THEIR AMTS. ARE DETD. BY THE TEMP. OF THE GAS FLOW.

FACILITY: FIZ. ENERG. INST., RIGA, USSR.

UNCLASSIFIED

APPROVED FOR RELEASE: 09/01/2001 CIA-RDP86-00513R002202020003-0"

"APPROVED FOR RELEASE: 09/01/2001 CIA-RDP86-00513R002202020003-0

USSR UDC: 533.09.07

AUZINYA, L. K., LIYEPINYA, V. E., ZAKE, M. V., MEL'NIKOV, V. K., MEL'NIKOV, Vl. K., UNGURS, I. A., and TSIYELENS, U. K.

"Method of Complex Experimental Investigations of Thermophysical Processes in a Chemically Active Coaxial Plasma Jet With Ti Particles"

Riga, Izvestiya Akademii nauk Latviyskoy SSR, No 2, 1972, pp 60-68

Abstract: Very little attention is now being given to low-temperature plasma jets with dispersed particles. Consequently, the purpose of this paper is to give the results of complex experimental investigations into the coaxial jet of a low-temperature argon plasma with dispersed particles of Ti. Measurements are made of the gas-dynamic parameters of a single-phase jet, variations in the chemical composition of the dispersed particles from the characteristics of the two-phased jet are studied, the spectral and integral characteristics of energy losses through radiation are obtained, and the electrical conductivity of the jet flux is investigated. The experimental equipment, a diagram of which is given, consists of arc heaters, a coaxial nozzle, a device for introducing powders into the jet, and measuring instruments. Of the features of these experiments,

1/2

APPROVED FOR RELEASE: 09/01/2001 CIA-RDP86-00513R002202020003-0"

"APPROVED FOR RELEASE: 09/01/2001 CIA-RDP86-00513R002202020003-0

USSR UDC: 533.09.07

AUZINYA, L. K., et al, Izvestiya Akademii nauk Latviyskoy SSR, No w, 1972, pp 60-68

the most interesting is the chemical conversion of the Ti into compounds containing large quantities of nitrogen in the form of nitrides and oxynitrides.

2/2

APPROVED FOR RELEASE: 09/01/2001 CIA-RDP86-00513R002202020003-0"

"APPROVED FOR RELEASE: 09/01/2001 CIA-RDP86-00513R002202020003-0

USSR UDC: 533.09.07

AUZINYA, L. K., LIYEPINYA, V. E., ZAKE, M. V., MEL'NIKOV, V. K., MEL'NIKOV, Vl. K., UNGURS, I. A., and USIYELENS, U. A.

"Method of Complex Experimental Investigations of Thermophysical Processes in a Chemically Active Coaxial Plasma Jet With Ti Particles"

Riga, Izvestiya Akademii nauk Latviyskoy SSR, No 2, 1972, pp 60-68

Abstract: Very little attention is now being given to low-temperature plasma jets with dispersed particles. Consequently, the purpose of this paper is to give the results of complex experimental investigations into the coaxial jet of a low-temperature argon plasma with dispersed particles of Ti. Measurements are made of the gas-dynamic parameters of a single-phase jet, variations in the chemical composition of the dispersed particles from the characteristics of the two-phased jet are studied, the spectral and integral characteristics of energy losses through radiation are obtained, and the electrical conductivity of the jet flux is investigated. The experimental equipment, a diagram of which is given, consists of arc heaters, a coaxial nozzle, a device for introducing powders into the jet, and measuring instruments. Of the features of these experiments,

APPROVED FOR RELEASE: 09/01/2001 CIA-RDP86-00513R002202020003-0"

"APPROVED FOR RELEASE: 09/01/2001 CIA-RDP86-00513R002202020003-0

UDC: 533.09.07

AUZINYA, L. K., et al, Izvestiya Akademii nauk Latviyskoy SSR, No w, 1972, pp 60-63

the most interesting is the chemical conversion of the Ti into compounds containing large quantities of nitrogen in the form of nitrides and oxynitrides.

2/2

APPROVED FOR RELEASE: 09/01/2001 CIA-RDP86-00513R002202020003-0"

"APPROVED FOR RELEASE: 09/01/2001 CIA-RDP86-00513R002202020003-0

USSR UDC 539.21

LAZAREV, B. G., (Academician, Academy of Sciences UkrSSR), KUZ'MENKO, V. M., SUDOVTSOV, A. I., and MEL'NIKOV, V. M.

"Specific Features of Bismuth Films Condensed at Liquid Helium Temperatures"

Moscow, Doklady Akademii Nauk SSSR (Proceedings Academy of Sciences USSR), Vol 194, No 2, 1970, pp 302-305

Abstract: Ytterbium and iron films deposited on substrates cooled by liquid helium appear to be amorphous until a critical thickness is reached, at which point they sudeenly assume their normal bulk structure. The purpose of this work is to study thin superconducting films of nonsuperconducting materials, such as bismuth, and to determine the critical thickness at which the superconducting structure changes into the nonsuperconducting modification.

Hilsch showed that fresh bismuth films are amorphous and superconducting at 6°K, but not at 14 to 20°K, at which temperature the bismuth crystalizes.

Disk-shaped films of 99.9999% pure bismuth were vacuum-deposited on glass substrates at temperatures $< 2°K$. A stepwise crystallization occurs

1/2

APPROVED FOR RELEASE: 09/01/2001 CIA-RDP86-00513R002202020003-0"

"APPROVED FOR RELEASE: 09/01/2001 CIA-RDP86-00513R002202020003-0

USSR

LAZAREV, B. G., et al., Doklady Akademii Nauk SSSR, Vol 194, No 2, 1971
pp 302-305

at a film thickness of ~600 Å. The change in phase also occurs at temperatures of 12 to 35°K, accompanied by a twenty-fold increase in resistance. For less pure films, phase conversion occurs at about 1300 Å.

From resistance-temperature curves it is found that traces of the amorphous phase remain up to temperatures of 25°K. Films thicker than 1300 Å develop cracks. Comparisons are made with films of differenr geometries. Ribbins exhibit different behavior, possibly due to edge effects, where thickness is less than at the center. The 14 disks tested produced identical results.

Orig. art. has 4 figures and 12 refs.

2/2

APPROVED FOR RELEASE: 09/01/2001 CIA-RDP86-00513R002202020003-0"

"APPROVED FOR RELEASE: 09/01/2001 CIA-RDP86-00513R002202020003-0

USSR UDC 621.762.002.5(088.8)

MEL'NIKOV, V. N., TRET'YAKOV, V. I., YEMEL'YANOVA, M. D., MURHAMEDZHANOV, A. K., KAMENSKAYA, D. S., MORGUN, G. N., CHAVRIKOV, M. G., and GRACHEV, Yu. S.

"Rotating Electrical Furnace for Production of Metallic Powders"

USSR Author's Certificate No 267823, Filed 23/06/66, Published 23/07/70 (Translated from Referativnyy Zhurnal-Metallurgiya, No 2, 1971, Abstract No 2 G477 P)

Translation: The furnace includes a hopper, loading and unloading chambers with worms, a body, rotating tube, and a device for removal of the layer of powder accumulating on the surface of the tube. In order to increase productivity of the process and improve working conditions, the device for removal of the powder layer from the surface of the tube is firmly fastened in the working space of the tube so that its leading edge is located parallel to its axis and its working face is at an angle to the radius. The device is attached to parts of the loading and unloading chambers.

1/1

APPROVED FOR RELEASE: 09/01/2001 CIA-RDP86-00513R002202020003-0"

"APPROVED FOR RELEASE: 09/01/2001 CIA-RDP86-00513R002202020003-0

USSR

UDC 612.014.426

MIKHAYLOVA-LUKASHEVA, V. D., SKRIPAL', A. V., MEL'NIKOV, V. P., KOROTKIY, V. P., NAYMITENKO, L. V., Gerontology Section of the Belorussian SSR Academy of Sciences

"Study of the Effect of Weak Electromagnetic Field Gradients on Man"

Minsk, Doklady Akademii nauk, BSSR, 1972, Vol 16, No 12, pp 1147-1149

Abstract: The gerontology section jointly with the Electronics Laboratory of the Academy of Sciences Belorussian SSR has begun studies of the effect of weak electromagnetic field gradients on the functional activity of a number of systems of the organism of man and various animals. To detect the reaction of man and animals to weak electromagnetic fields, pulses of exponential shape were used with a frequency corresponding to the rhythms of the physiological processes characterizing the functional state of the organism (f = 0.5-30 hertz) and a frequency of 200-400 hertz corresponding to the rhythms of the excited receptors. The goal was to detect the reaction to the weak electromagnetic field gradients not only of the coherent electromagnetic radiation but also energy gradients of the interference type, white noise, which was created in the 50 hertz to 6 megahertz band. Electroencephalograms, electrocardiograms, phonocardiograms, rheovasograms, plethysmograms and recordings of the arterial pressure and respiration were taken. Electromagnetic energy

1/2

APPROVED FOR RELEASE: 09/01/2001 CIA-RDP86-00513R002202020003-0"

"APPROVED FOR RELEASE: 09/01/2001 CIA-RDP86-00513R002202020003-0

USSR

MIKHAYLOVA-LUKASHEVA, V. D., Doklady Akademii nauk, BSSR, 1972, Vol 16, No 12, pp 1147-1149

gradients from 0 to $27 \cdot 10^{-24}$ joules were created. The experimental setup and means of calculating the gradients are described in detail in this paper and the variations in the physiological functions will be discussed in later reports.

2/2

APPROVED FOR RELEASE: 09/01/2001 CIA-RDP86-00513R002202020003-0"

"APPROVED FOR RELEASE: 09/01/2001 CIA-RDP86-00513R002202020003-0

Acc. Nr. AA0108722 Abstracting Service: 3-70 Ref. Code: UR 0482

Soviet Inventions Illustrated, Section II Electrical, Derwent,

244352 ROLL PELLETISER to produce hard alloys from powder comprises smooth sprung metal rolls (1) enclosed by a cowl (3) with a bin (4) at the top and a portioner (5). A rubber sleeve (7) in the channel (6) connects to the uppers of a vibro-screen (8) carried on shock absorbers (9). Above the screen deck is an intermediate deck (10) with paddle. The two screen decks are enclosed together with a channel (12). A bin (13) below the screen (8) has a vibrator (14) and worm (15) to feed the rolls.

27.5.63 as 838490/22-2. PARFENOV.F.I., A.P. CHERNOZUBOV. V.P. MELNIKOV et al. (9.10.69) Bul 18/28.5.69. Class 18a. Int.Cl. C 21 b.

AUTHORS: Parfenov, F. I.; Chernozubov, A. P.; Mel'nikov, V. P.; Kropisnov, M. K.; Yakovlev, V. P.; Nelidov, M. A.

18

1/2

REEL/FRAME
19900498

APPROVED FOR RELEASE: 09/01/2001 CIA-RDP86-00513R002202020003-0"

"APPROVED FOR RELEASE: 09/01/2001 CIA-RDP86-00513R002202020003-0

Acc. Nr.: AA0108722

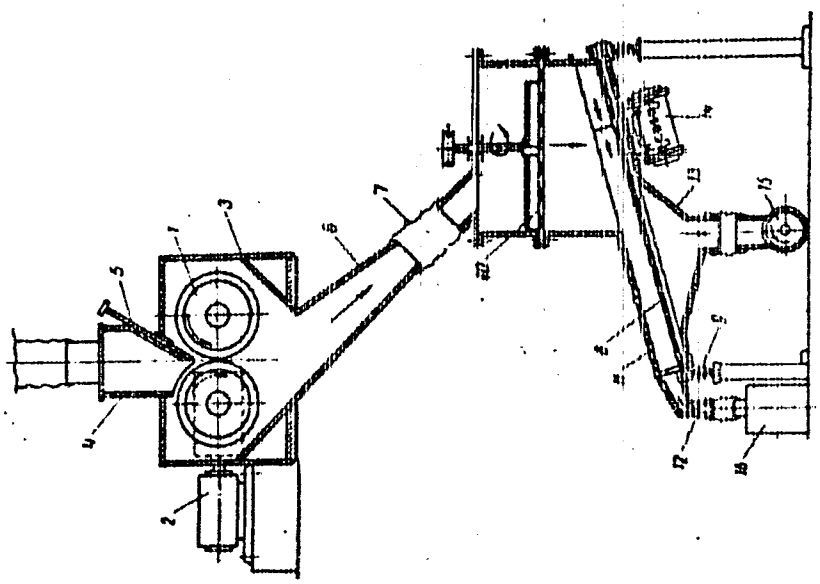

2/2

Reel/Frame

19900499

B5

APPROVED FOR RELEASE: 09/01/2001 CIA-RDP86-00513R002202020003-0"

"APPROVED FOR RELEASE: 09/01/2001 CIA-RDP86-00513R002202020003-0

USSR

UDC 576.801

MEL'NIKOV, Y. S., and TERSKOV, I. A., Physics Institute, Siberian Branch of the Academy of Sciences USSR, Krasnoyarsk

"Transmission Functions of Continuous Microorganism Cultures"

Novosibirsk, Izvestiya Sibiriskogo Otdeleniya Akademii Nauk SSSR, Seriya Biologicheskikh Nauk, Vol 1, No 5, Apr 70, pp 67-71

Abstract: The theory of automation must be applied to the analysis and synthesis of dynamic systems involving processes of microbiological biosynthesis. A continuous culture is considered to be a "black box," and only the input and output coordinates need to be examined for its description. A transmission function takes into account, in addition to the biological characteristics, also the technical characteristics. Technological parameters, depending on the construction of the cultivator and on the method of obtaining a continuous culture, have an effect on the results and distort them. The concept of the transmission function is refined, and a mathematical model for the biosynthesis is set up, in which it would be possible to separate the biological characteristics from the technical ones. The class of problems pertaining to growth characteristics was chosen for the study. In this case, the output parameters may be any values

1/2

APPROVED FOR RELEASE: 09/01/2001 CIA-RDP86-00513R002202020003-0"

"APPROVED FOR RELEASE: 09/01/2001 CIA-RDP86-00513R002202020003-0

USSR

MEL'NIKOV, Y. S., et al, Izvestiya Sibiriskogo Otdeleniya Akademii Nauk SSSR, Seriya Biologicheskikh Nauk, Vol 1, No 5, Apr 70, pp 67-71

characterizing the decrease in raw material, the accumulation of biosynthesis products, or the intensity of the associated processes. Of all parameters, the concentration of the biomass is of greatest interest, since it is closely related dynamically to the mass metabolic processes in the culture. It can be traced by the differential optical density meter, a device by which changes in the growth rate can also be monitored. An equation is derived for the concentration of the biomass in a growing culture. This equation represents the biomass culture as a device with a two-position control, and a relay-impulse system, in which the continuation of the control effect can be stopped. Transmission functions of continuous cultures of microporganisms are required for engineering calculations, and may represent a classification device for different cultures and strains.

2/2

APPROVED FOR RELEASE: 09/01/2001 CIA-RDP86-00513R002202020003-0"

"APPROVED FOR RELEASE: 09/01/2001 CIA-RDP86-00513R002202020003-0

AM0033529

M

Simulin,N.A.; Mel'nikov,Ya.Ya.; Furman,M.S.; Krichevskiy,I.R.; Samarin,B.P.; Alekseyev,A.M.; Tveretskiy,S.A.; Kreysberg,Ya.A. (Editorial Board)

Handbook for the Nitrogen Worker.Vol.2 (Spravochnik azotchika.Tom Khiniya. 445 pp. (SL:652)

TABLE OF CONTENTS:

Preface			9
Chapter	I	The Production of Nitric Acid	11
	II	The Production of Nitric Fertilyzers	117
	III	Materials and Basic Special Equipment	251
	IV	Power Supply	369
	V	Safety Technique	415
		Subject Index	431

19710038

6

1/2

APPROVED FOR RELEASE: 09/01/2001 CIA-RDP86-00513R002202020003-0"

"APPROVED FOR RELEASE: 09/01/2001 CIA-RDP86-00513R002202020003-0

AM0033[illegible]9

In the second volume of the handbook are examined the physico-chemical bases of the processes and industrial projects for the production of nitric acid and nitric fertilizers.
The handbook is designed for technical engineers in the nitric and other branches of chemical industry. Each chapter has a bibliography, in all 294 references

2/2

19710039

APPROVED FOR RELEASE: 09/01/2001 CIA-RDP86-00513R002202020003-0"

"APPROVED FOR RELEASE: 09/01/2001 CIA-RDP86-00513R002202020003-0

USSR UDC 621.385.6(083.8)

MEL'NIKOV, Yu. A.

"Electrovacuum Device"

USSR Author's Certificate No 267759, filed 20 August 68, published 9 July 1970 (from RZh--Elektronika i yeye primeneniye, No 1, January 1971, Abstract No 1A107P)

Translation: A microwave electrovacuum device is proposed which contains a housing, a magnetic system based on permanent magnets located outside the housing of the device, and a thermoshunt of an alloy with an anomalous (close to straight) dependence of the magnetic permeability on the temperature. With the object of compensation of the reversible changes of the magnetic field, the thermoshunt is made in the form of a wire spiral and is located outside the housing of the device on the permanent magnets of the system.

1/1

APPROVED FOR RELEASE: 09/01/2001 CIA-RDP86-00513R002202020003-0"

"APPROVED FOR RELEASE: 09/01/2001 CIA-RDP86-00513R002202020003-0

UDC 621.385.632(088.8)

USSR

MEL'NIKOV, Yu. A.

"Magnetic System"

USSR Author's Certificate No 258471, Filed 19 Nov 68, Published 17 Apr 70 (From RZh--Elektronika i yeye primeneniye, No 10, October 1970, Abstract No 10A178P)

Translation: A magnetic system for microwave devices is proposed for creation of a permanent magnetic field in the toroidal gap of a device. The system contains a bar magnet and two poleshoes, each combined at one point with a nonferromagnetic strip of material with a high linear expansion coefficient (e.g., aluminum, Teflon) encircling them with respect to the external diameter. With the object of compensation for the reversible temperature changes of the induction in the working gap of the device, the bar magnet is divided into two parts each of which is rigidly fastened to its pole shoe and has sector grooves [vyrez], and with respect to the axis all the system is connected by components of nonferromagnetic material, e.g., a bolt.

1/1

APPROVED FOR RELEASE: 09/01/2001 CIA-RDP86-00513R002202020003-0"

"APPROVED FOR RELEASE: 09/01/2001 CIA-RDP86-00513R002202020003-0

UDC 621.385.652(088.8)

USSR

MEL'NIKOV, Yu. A.

"Magnetic System"

USSR Author's Certificate No 258470, Filed 4 Nov 68, Published 17 Apr 70 (from RZh--Elektronika i yeye primeneniye, No 10, October 1970, Abstract No 10A177P)

Translation: A magnetic system is proposed for an M-Type microwave device which contains two permanent magnets and a magnetic shield. With the object of reducing the dimensions and weight of the magnetic system, the magnetic shield is made of two encircling permanent magnet units [chest'], each of which consists of a series of plates of high-permeability material which encloses the faces of the magnets opposite to the working gap and diverges from them at various angles. The free ends of the upper plates of high-permeability material can be bent to the side of the magnets and form a platform perpendicular to the axis of the system.

1/1

APPROVED FOR RELEASE: 09/01/2001 CIA-RDP86-00513R002202020003-0"

"APPROVED FOR RELEASE: 09/01/2001 CIA-RDP86-00513R002202020003-0

AA0043331

UR 0482

Soviet Inventions Illustrated, Section II Electrical, Derwent,

243085 MAGNETIC LENS has a field which can be controlled within a wide interval by a tube which can be turned around its axis and is arranged between the pole pieces. This tube consists of strips of ferromagnetic and nonferromagnetic material. The ferromagnetic strips may be wider in the centre than near the pole pieces so as to make the field control smoother. If magnetically soft material is used for the ferromagnetic strips the tubular ring can also be used as a magnetic shunt. If hard, it can serve as a variable source of an emf which is applied to the lens channel. 23.10.67 as 1192474/26-25. YU.A. MILNIKOV(18.9.68) Bul 16/5.5.69. Class 21g. Int.Cl.H 01j.

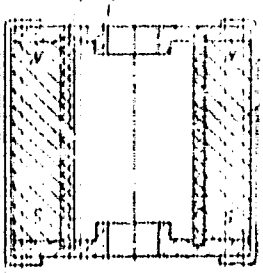

1/1

19761554

APPROVED FOR RELEASE: 09/01/2001 CIA-RDP86-00513R002202020003-0"

"APPROVED FOR RELEASE: 09/01/2001 CIA-RDP86-00513R002202020003-0

Acc. Nr.: AA0040537 M Ref. Code: UR0482

JPRS 52248
UDC 621.385.632

USSR

MEL'NIKOV, YU. A.

"Magnetic Systems"

Moscow, Otkrytiya, izobreteniya, promyshlennyye obraztsy, tovarnyye znaki, No 1, 1970, p 68, Author Certificate No 258470 Class 21g.

Abstract: This author certificate introduces a magnetic system for M-type microwave apparatus. The system consists of two permanent magnets and a magnetic screen. To reduce size weight, the magnetic screen consists of two parts encircling only the permanent magnets, each part consists of a set of plates made of soft magnetic material which convers the opposite ends of the permanent magnets, opposite the working air gap and which diverges from them at different angles.

21

Reel/Frame
19750051

APPROVED FOR RELEASE: 09/01/2001 CIA-RDP86-00513R002202020003-0"

"APPROVED FOR RELEASE: 09/01/2001 CIA-RDP86-00513R002202020003-0

AA0040537

The same magnetic system as in paragraph 1 except that the free ends of the upper plates are made of soft magnetic material and are bent toward the magnets and form surfaces normal to the system axis.

19750052

2/2

APPROVED FOR RELEASE: 09/01/2001 CIA-RDP86-00513R002202020003-0"

"APPROVED FOR RELEASE: 09/01/2001 CIA-RDP86-00513R002202020003-0

Acc. Nr.: AM0040538

Ref. Code: UR0482
JPRS 50248

UDC 621.385.632

USSR

MEL'NIKOV, YU. A.

"Magnetic System"

Moscow, Otkrytiya, izobreteniya, promyshlennyye obraztsy, tovarnyye znaki, No 1, 1970, p 68, Author Certificate No 258471 Class 21g.

Abstract: This author certificate introduces a magnetic system of microwave apparatus designed for generating a permanent magnetic field in the apparatus toroidal gap. The apparatus consists of a rod magnet, two pole tips, each connected at one point to a non-ferromagnetic tape made of a high linear expansion coefficient material (e.g. aluminum), and polyfluoroethylene resin, which encircles them along the external diameter. For the purpose of compensation of the induction reversible temperature variation in the air gap, the rod magnet is divided into two parts rigidly fastened to its pole tip and having segment-shaped notches, while the whole system is connected along its axis by a piece of nonferromagnetic material (e.g. bolt).

Reel/Frame
19750053

APPROVED FOR RELEASE: 09/01/2001 CIA-RDP86-00513R002202020003-0"

"APPROVED FOR RELEASE: 09/01/2001 CIA-RDP86-00513R002202020003-0

USSR

UDC 621.325.684

PASMANNIK, V. I., KISELEV-DMITRIYEV, M. V., and MEL'NIKOV, Yu. I.

"Multi-Gap Resonator for a Klystron Amplifier"

Moscow, Otkrytiya, izobreteniya, promyshlennyye obraztsy, tovarnyye znaki, No. 33, 1971, pp 171-172

Abstract: The resonator, consisting of a casing with hoods and electron transit tubes joined to the casing by means of radial rods, operates in out-of-phase oscillation. The distinctive feature of the resonator is that the casing is formed of external and internal cylinders with ring gaps between their ends. This improves the operational stability of the device. For easing the resonator tuning, the middle transit tubes are divided into two equal parts connected with the corresponding internal cylinder. A cross-sectional diagram of the klystron resonator is shown.

1/2

APPROVED FOR RELEASE: 09/01/2001 CIA-RDP86-00513R002202020003-0"

"APPROVED FOR RELEASE: 09/01/2001 CIA-RDP86-00513R002202020003-0

USSR

PASMANNIK, V. I., et al., Otkrytiya, izobreteniya, promyshlennyye obraztsy, tovarnyye znaki, № 33, 1971, pp 171-172

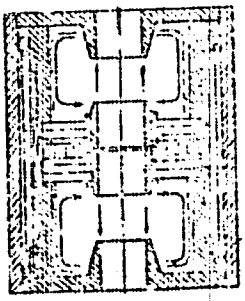

MULTI-GAP RESONATOR
FOR KLYSTRON AMPLIFIER

2/2

APPROVED FOR RELEASE: 09/01/2001 CIA-RDP86-00513R002202020003-0"

"APPROVED FOR RELEASE: 09/01/2001 CIA-RDP86-00513R002202020003-0

1/2 012 UNCLASSIFIED PROCESSING DATE--23OCT7

TITLE--FUSIBILITY OF SALT SYSTEMS CONTAINING URANIUM TRICHLORIDE -U-

AUTHOR-(05)-DESYATNIK, V.N., MELNIKOV, YU.T., NICHKOV, I.F., RASPOPIN, S.P., MAKOSOV, V.V.

COUNTRY OF INFO--USSR

M

SOURCE--AT. ENERG. 1970, 28(3), 247-9

DATE PUBLISHED--------70

SUBJECT AREAS--CHEMISTRY

TOPIC TAGS--URANIUM COMPOUND, CHLORIDE, MOLTEN CHLORIDE, FUSED SALT, LEAD COMPOUND, EUTELTIC

CONTROL MARKING--NO RESTRICTIONS

DOCUMENT CLASS--UNCLASSIFIED

PROXY REEL/FRAME--1997/1577 STEP NO--UR/0089/70/028/003/0247/0249

CIRC ACCESSION NO--AP0120356

UNCLASSIFIED

APPROVED FOR RELEASE: 09/01/2001 CIA-RDP86-00513R002202020003-0"

"APPROVED FOR RELEASE: 09/01/2001 CIA-RDP86-00513R002202020003-0

UNCLASSIFIED PROCESSING DATE--23OCT

2/2 012

CIRC ACCESSION NO--AP0120356

ABSTRACT/EXTRACT--(U) GP-0- ABSTRACT. THE PHASE DIAGRAM OF THE UCL SUB3-PBCL SUB2-UCL SUB4 SYSTEM, WITH POLYTHERMAL SECTIONS FOR 100-800DEGREES IS PRESENTED. THE UCL SUB3-PBCL SUB2 SYSTEM ALWAYS CONTAINS UCL SUB4 AS A RESULT OF ITS FORMATION (TOGETHER WITH PB) IN TH INTERACTION OF UCL SUB3 AND PBCL SUB2; HENCE, IT SHOULD BE REGARDED AS TERNARY SYSTEM, WITH 2 EUTECTICS CONTG. 11 AND 25PERCENT UCL SUB3 AND AT 473 AND 478DEGREES, RESP., AND WITH A COMPD. 4PBCL SUB2. UCL SUB3, AT 512DEGREES.

UNCLASSIFIED

APPROVED FOR RELEASE: 09/01/2001 CIA-RDP86-00513R002202020003-0"

"APPROVED FOR RELEASE: 09/01/2001 CIA-RDP86-00513R002202020003-0

JPRS 59215

6 June 1973

TRANSLATIONS ON USSR POLITICAL AND SOCIOLOGICAL AFFAIRS

No. 392

CONTENTS PAGE

State Influence on Scientific, Technical Progress in the U.S.
(Ye. A. Lebedeva; SSHA: Gosudarstvennoye Vozdeystviye na Nauchno-Tekhnicheskiy Progress, 1972) 1

Book Describes Economic, Social, Political Development of U.S.
(A. V. Anikin; Sovremennyye Shtaty Ameriki, 1972) 14

APPROVED FOR RELEASE: 09/01/2001 CIA-RDP86-00513R002202020003-0"

"APPROVED FOR RELEASE: 09/01/2001 CIA-RDP86-00513R002202020003-0

2

[illegible] DESCRIBES ECONOMIC, SOCIAL, POLITICAL DEVELOPMENT OF U.S.

[illegible] from the book edited by Doctor of Economic Sciences A.V. Anikin, Moscow, Sovedinennyye Shtaty Ameriki, Russian, 1972, pp 3,4,5-17,403-444, 4[illegible]-461]

Title Page

Title: Sovedinennyye Shtaty Ameriki (The United States of America)

Responsible Editor: A.V. Anikin

Institute: Order of the Red Banner of Labor Institute of World Economics and International Relations of the Academy of Sciences USSR. Economics and Politics of the Countries of Contemporary Capitalism.

Publisher: Izdatel'stvo Mysl'

Place and year of publication: Moscow, 1972

Date to Press Date: 4 September 1972

Number of Copies Published: 32,000

Number of Pages: 462

Brief Description:

The present-day tendencies of the economic, social, and political development of the United States are examined in the book. A great deal of attention is given to an analysis of the productive forces under the influence of the scientific and technological revolution. An analysis is made of the postwar cyclical development, of the current currency and financial crisis, and of all of the foreign economic relations of the United States. The problems of the social structure, class struggle, and the domestic and foreign policies of the United States are studied.

2

APPROVED FOR RELEASE: 09/01/2001 CIA-RDP86-00513R002202020003-0"

"APPROVED FOR RELEASE: 09/01/2001 CIA-RDP86-00513R002202020003-0

Information on Authors

27

CHIEF EDITORIAL BOARD OF SOCIAL AND ECONOMIC LITERATURE

AUTHORS' COLLECTIVE

Introduction -- Doctor of Economic Sciences A.V. Anikin
Chapter I -- Candidate in Economic Sciences G.N. Naydenov
Chapter II -- Doctor of Economic Sciences A.A. Manukyan
Chapter III -- Doctor of Economic Sciences N.I. Mongolet
Chapter IV -- Candidate in Economic Sciences Ye.F. Zhukov
Chapter V -- Candidate in Economic Sciences V.M. Shundeyev
Chapter VI -- Candidate in Economic Sciences Ya.A. Lebedeva
Chapter VII -- Candidate in Economic Sciences Ye.V. Bugrov
Chapter VIII -- Candidate in Economic Sciences N.N. Zagladina
Chapter IX -- Candidate in Historical Sciences V.P. Androsov
(Section 1 was written by Doctor of Historical Sciences G.G. Diligenskiy)
Chapter X -- Candidate in Historical Sciences M.S. Voschikov
Chapter XI -- Doctor of Economic Sciences A.A. Manukyan
Chapter XII -- Candidate in Economic Sciences E.V. Fedorovskaya
Chapter XIII -- Candidate in Economic Sciences Ye.M. Istomina
Chapter XIV -- Candidate in Economic Sciences E.V. Fedorovskaya
(Section 5 was written by Candidate in Economic Sciences T.V. Zakharova)
Chapter XV -- Candidate in Economic Sciences R.A. Konyayev
Chapter XVI -- Doctor of Historical Sciences O.M. Bykov, Doctor of Historical Sciences Yu.M. Mal'nikov, and Doctor of Economic Sciences M.A. Grechev

Scholarly Secretary for Research -- Candidate in Economic Sciences G.N. Naydenov

The following took part in editing the sections of the monograph: Candidate in Historical Sciences M.S. Voschikov, Doctor of Economic Sciences A.A. Manukyan, and Candidate in Economic Sciences G.N. Naydenov.

S.I. Zapadinskaya and N.N. Chekhunova took part in the technical preparation of the manuscript for publication.

SPRS 54215
6 Jan 73

3X

APPROVED FOR RELEASE: 09/01/2001 CIA-RDP86-00513R002202020003-0"

"APPROVED FOR RELEASE: 09/01/2001 CIA-RDP86-00513R002202020003-0

AAC052661

UR 0482

Soviet Inventions Illustrated, Section I Chemical, Derwent,

2/70

243574 DISPERSER FOR PREPARING IMPREGNATION MATERIAL, e.g. size of increased uniformity and quality in this disperser fitted with conventional coaxial moving hollow cylinders, the water and loose materials enter already mixed together, separately from the highly viscous polyacrylamide which is "minced" as it passes through a perforated disc (shown on the left of the drawing).

Shilovskiy, V. M.; Mel'nikov, Yu. V.; Vasil'yanovskiy, N. P.

Proizvodstvenno--Tekhnicheskoye Predpriyatiye "Tadzhikpromavtomatika"

1/3

19821406

APPROVED FOR RELEASE: 09/01/2001 CIA-RDP86-00513R002202020003-0"

"APPROVED FOR RELEASE: 09/01/2001 CIA-RDP86-00513R002202020003-0

AA0052661

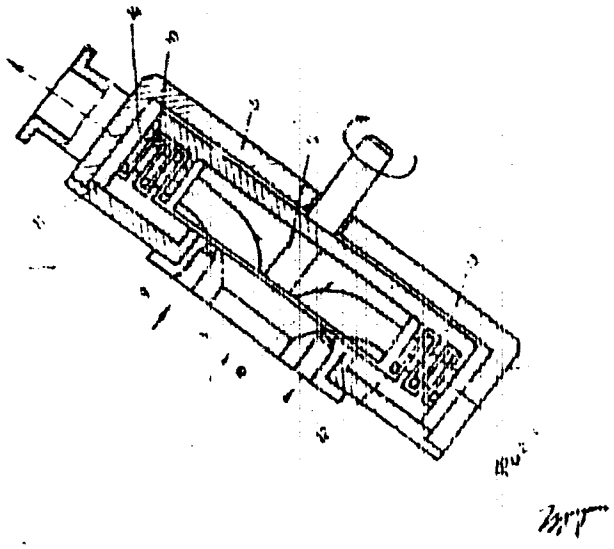

3/3

19821408

APPROVED FOR RELEASE: 09/01/2001 CIA-RDP86-00513R002202020003-0"

"APPROVED FOR RELEASE: 09/01/2001 CIA-RDP86-00513R002202020003-0

1/2 029 UNCLASSIFIED PROCESSING DATE--09OCT70

TITLE--REACTION OF HEXAFLUORODIMETHYLAMINE OXIDE. V. KINETICS OF THE REACTION OF HEXAFLUORODIMETHYLAMINE OXIDE WITH POLYHALOGENATED OLEFINS

AUTHOR-(04)-MELNIKOVA, A.V., BARANAYEV, M.K., MAKAROV, S.P., ENGLIN, M.A.

COUNTRY OF INFO--USSR

SOURCE--ZH. OBSHCH. KHIM. 1970, 40(2) 382-5

DATE PUBLISHED--------70

SUBJECT AREAS--CHEMISTRY

TOPIC TAGS--REACTION KINETICS, HALOGENATED ORGANIC COMPOUND, ALKENE, FLUORINATED ORGANIC COMPOUND, AMINE, ORGANIC OXIDE, CHEMICAL REACTION RATE, ACTIVATION ENERGY, BUTENE, CYCLIC GROUP

CONTROL MARKING--NO RESTRICTIONS

DOCUMENT CLASS--UNCLASSIFIED

PROXY REEL/FRAME--1992/1531 STEP NO--UR/0079/70/040/002/0382/0385

CIRC ACCESSION NO--AP0112575

UNCLASSIFIED

APPROVED FOR RELEASE: 09/01/2001 CIA-RDP86-00513R002202020003-0"

"APPROVED FOR RELEASE: 09/01/2001 CIA-RDP86-00513R002202020003-0

UNCLASSIFIED PROCESSING DATE--09OCT70

2/2 029

CIRC ACCESSION NO--AP0112575

ABSTRACT/EXTRACT--(U) GP-0- ABSTRACT. THE FOLLOWING VALUES AT INDICATED TEMP. WERE DETD. FOR TITLE REACTION RATE CONSTS. (X TIMES 10 PRIMES MIN PRIME NEGATIVE1 MM PRIME NEGATIVE1) AND ACTIVATION ENERGIES (KCAL-MOLE), RESP. BETWEEN (CF SUB3) SUB2-NO. AND INDICATED OLEFINS: CF SUB2:CHF, 0DEGREES, 16.12, 7.0; 7DEGREES 16.7, 7.0; 22DEGREES 47.3, 7.0; CF SUB3 CF:CF SUB2, 0DEGREES, 2.67, 7.4; 22DEGREES, 7.4, 7.4; 50DEGREES, 228, 7.4; (CF SUB3) SUB2 C:CF SUB2, 100DEGREES, 4.2, 9.4; 140DEGREES, 10.6, 9.4; 170DEGREES, 31, 9.4; CF SUB2:CH SUB2 70DEGREES 5.43, 9.4; 100DEGREES 13.74, 9.4; AND PERFLUOROCYCLOBUTENE 170DEGREES 3.4, 9.9; 225DEGREES, 12.57, 9.9.

UNCLASSIFIED

APPROVED FOR RELEASE: 09/01/2001 CIA-RDP86-00513R002202020003-0"

"APPROVED FOR RELEASE: 09/01/2001 CIA-RDP86-00513R002202020003-0

USSR

UDC 678.5.01:537.311

RATNIKOV, E. N., POGOSOV, Yu. L., MEL'NIKOVA, G. A.

"Electrically Conducting Polymer Materials Based on Cellulose Esters"

Moscow, Plasticheskiye Massy, No 1, 1973, pp 34-35

Abstract: The results of studying electrically conducting materials based on various cellulose esters -- acetyl and acetobutyrate and acetopropionate cellulose -- are described. Data are presented on the effect of the graphite content, the thickness of the electrically conducting layer and the type of cellulose ester on the electrical conductivity of the cellulose ester and graphite system. A study is made of the thermal coefficient of the resistance of the system as a function of the modifying additives.

With an increase in the amount of graphite introduced into the system (to 55%) the contact resistance drops noticeably after which an insignificant decrease is observed. This content of electrically conducting additive is sufficient to stabilize the values of the contact resistance. The application of insulating layers of cellulose esters to a conducting polymer doubles the electrical resistance of the specimen which can be explained by the penetration of polymer molecules from the insulating layer into the conducting layer and destruction of the conducting chains.

1/1

APPROVED FOR RELEASE: 09/01/2001 CIA-RDP86-00513R002202020003-0"

"APPROVED FOR RELEASE: 09/01/2001 CIA-RDP86-00513R002202020003-0

USSR UDC: 547.87+541.127+632.954

BYKHOVSKAYA, T. N., MEL'NIKOVA, I. A., MEL'NIKOV, N. N., VLASOV, N. N., BASKAKOV, Yu. A., All-Union Scientific Research Institute of Chemical Agents for Plant Protection

"Alkaline Hydrolysis of Chlorine Derivatives of s-Triazine"

Leningrad, Zhurnal Obshchey Khimii, Vol 39 (101), No 7, Jul 69, pp 1497-1501

Abstract: The authors study alkaline hydrolysis of dichloro and monochloro substituted derivatives of s-triazine. In the case of the dichloro derivatives, hydrolysis was done in a water-acetone solution according to the reaction

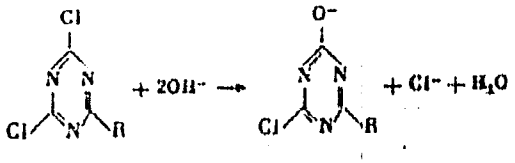

1/2

APPROVED FOR RELEASE: 09/01/2001 CIA-RDP86-00513R002202020003-0"

"APPROVED FOR RELEASE: 09/01/2001 CIA-RDP86-00513R002202020003-0

USSR

BYKHOVSKAYA, T. N., et al, Zhurnal Obshchey Khimii, Vol 39 (101), No 7, Jul 69, pp 1497-1501

The monochloro substituted s-triazines were hydrolyzed in water plus ethylene glycol according to the reaction

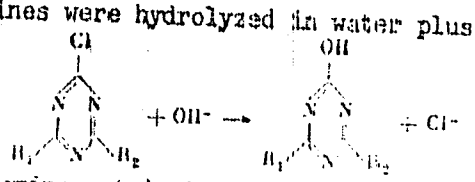

Three 2,4-dichloro-6-alkyl(dialkyl)amino-s-triazines and ten 2-chloro-4,6--disubstituted derivatives of 2-triazine were studied. The hydrolysis reaction conforms to a second-order equation. The activation energies were calculated. It is found that the O-alkylhydroxylamine radical in 2-chloro-4,6-diamino-s--triazines deactivates the chlorine atom to a greater degree than does the alkylamine radical. It is shown that transmission of the induction effect of the substituents through the triazine ring may be described by a Hammett equation.

2/2

APPROVED FOR RELEASE: 09/01/2001 CIA-RDP86-00513R002202020003-0"

"APPROVED FOR RELEASE: 09/01/2001 CIA-RDP86-00513R002202020003-0

USSR UDC 632.95

MEL'NIKOV, N. N., MEL'NIKOVA, I. A., STONOV, L. D., KAZAKOVA, V. G., and GRABOVSKAYA, A. P.

"A Herbicide"

USSR Author's Certificate No 300143, filed 17 Sep 69, published 5 Oct 71 (from RZh-Khimiya, No 11, Jun 72, Abstract No 11N477)

Translation: 2-MeO-4-RNH-6-R'(HO)N-symm-triazines (I) (R = C_1-C_5-alkyl, R' = C_2-C_4-alkyl) are utilized as selective herbicides. Compounds I in a herbicidal dose of 1 kg/hektare in the progermination stage are harmless to cotton. When used for treatment in the vegetative stage, compounds I with their high specificity for millet, were found to be very toxic for pigweed, corn mayweed, amaranth, wild oats and other weeds.

1/1

APPROVED FOR RELEASE: 09/01/2001 CIA-RDP86-00513R002202020003-0"

"APPROVED FOR RELEASE: 09/01/2001 CIA-RDP86-00513R002202020003-0

UNCLASSIFIED PROCESSING DATE--13NOV70

1/2 013

TITLE--RELATION OF CHEMICAL COMPOSITIONS AND PHYSICAL PROPERTIES OF ARTESIAN WATERS WITH DEEP TECTONICS, ILLUSTRATED THE KARABAKH STEPPE -U-

AUTHOR-(03)-KRASILSHCHIKOV, L.A., GUSLITSER, M.I., MELNIKOV, [illegible]

COUNTRY OF INFO--USSR

SOURCE--AZERB. NEFT. KHOZ. 1970, (3), 13-15

DATE PUBLISHED--------70

SUBJECT AREAS--EARTH SCIENCES AND OCEANOGRAPHY

TOPIC TAGS--ARTESIAN WATER, SODIUM, CHLORINE, MINERAL

CONTROL MARKING--NO RESTRICTIONS

DOCUMENT CLASS--UNCLASSIFIED

PROXY REEL/FRAME--3006/0302 STEP NO--UR/0487/70/000/003/0013/0015

CIRC ACCESSION NO--AP0134106

UNCLASSIFIED

APPROVED FOR RELEASE: 09/01/2001 CIA-RDP86-00513R002202020003-0"

"APPROVED FOR RELEASE: 09/01/2001 CIA-RDP86-00513R002202020003-0

UNCLASSIFIED PROCESSING DATE--13NOV70

2/2 013

CIRC ACCESSION NO--AP0134106

ABSTRACT/EXTRACT--(U) GP-0- ABSTRACT. THE MINERALIZATION OF THE ARTESIAN WATER INCREASED DUE TO HOT AND MINERALIZED WATER WHICH PENERATED INTO THE CONTINENTAL STRATA, PRODUCING AN ANOMALY OF TEMP. AND CONTENT OF CL AND NA. THE HYDROGEOL. SURVEY SHOWED THE APPEARANCE OF BURIED DOMES.

UNCLASSIFIED

APPROVED FOR RELEASE: 09/01/2001 CIA-RDP86-00513R002202020003-0"

"APPROVED FOR RELEASE: 09/01/2001 CIA-RDP86-00513R002202020003-0

USSR

UDC 621.372.061

M

MELNIKOVA, I. V.

"Band Phase Splitter of the Differential-Bridge Type"

Tr. Tomskogo in-ta radioelektron. i elektron. tekhn (Works of Tomsk Institute of Radioelectronics and Electronic Engineering), 1970, No 16, pp 24-27 (from RZh-Radiotekhnika, No 8, Aug 70, Abstract No 8A160)

Translation: This article contains an investigation of the effect of inequality of amplitudes and counterphase errors of the feed voltages on the basic characteristics of phase splitters of the differential-bridge type. The modulus and argument of the voltage transmission coefficient in the arm of the phase splitter for input voltages of

$$\dot{u}_{bx_2} = (u_{bx_1} \pm \Delta u)e^{j(180^\circ - \theta)} = -u_{bx_1}(1 \pm \Delta\alpha)e^{-j\theta},$$

are analyzed where $\Delta\alpha = \Delta U/\Delta u_{inp_1}$ is the relative difference in the feed voltage amplitudes, θ is a value which indicates to what extent the phase shift between the feed voltages differs from 180°. It is demonstrated that the shift

1/2

APPROVED FOR RELEASE: 09/01/2001 CIA-RDP86-00513R002202020003-0"

"APPROVED FOR RELEASE: 09/01/2001 CIA-RDP86-00513R002202020003-0

USSR

MELNIKOVA, I. V., Tr. Tomskogo in-ta radioelektron. i elektron. tekhn (Works of Tomsk Institute of Radioelectronics and Electronic Engineering), 1970, No 16, pp 24-27 (from RZh-Radiotekhnika, No 8, Aug 70, Abstract No 8A160)

of the phase difference characteristic depends weakly on frequency, and it is 0.78, and the inequality of the moduluses of the transmission coefficients of the arms under the effect of $\Delta\alpha$ also has little dependence on frequency, and it is approximately equal to $0.7\Delta\alpha$. There is one illustration and a one-entry bibliography.

2/2

APPROVED FOR RELEASE: 09/01/2001 CIA-RDP86-00513R002202020003-0"

"APPROVED FOR RELEASE: 09/01/2001 CIA-RDP86-00513R002202020003-0

USSR

UDC 621.372.5/.6

MELNIKOVA, I. V.

"Effect of Capacitance in a Load on the Characteristics of a Band Phase Splitter of the Bridge Type"

Tr. Tomskogo in-ta radioelektron. i elektron. tekhn. (Works of Tomsk Institute of Radioelectronics and Electronic Engineering), 1970, No 16, pp 28-32 (from RZh-Radiotekhnika, No 8, Aug 70, Abstract No 8A199)

Translation: This article contains an evaluation of the effect of stray capacitance in a load on the characteristics of a first-order phase circuit. Calculational relations are presented. The generalized phase characteristics are also presented. It is demonstrated that the presence of a relatively small capacitance leads to significant distortion of the phase-difference characteristic and modulus. At high-frequencies with relatively high load resistances the magnitude of the stray capacitance is comparable to the capacitance of the elements of a bridge circuit, and it leads to violation of the normal operating conditions of the circuit. The relations permitting determination of the allowable value of the stray capacitance are derived beginning with the given requirements on accuracy of realization of the phase-difference characteristics and modulus. The bibliography has one entry.

1/1

APPROVED FOR RELEASE: 09/01/2001 CIA-RDP86-00513R002202020003-0"

"APPROVED FOR RELEASE: 09/01/2001 CIA-RDP86-00513R002202020003-0

USSR

UDC 621.372.061

MELNIKOVA, I. V.

"Effect of Losses on the Characteristics of Some Linear Passive Band Phase Splitters"

Tr. Tomskogo in-ta radioelektron. i elektron. tekhn (Works of Tomsk Institute of Radioelectronics and Electronic Engineering), 1970, No 16, pp 35-42 (from RZh-Radiotekhnika, No 8, Aug 70, Abstract No 8A159)

Translation: This article contains a study of the effect of losses in inductance coils on the characteristics of linear passive band phase splitters. The values of the Q-factors of the coils for which this effect can be neglected are also determined. The method of investigation consists in deriving formulas which describe the phase-difference and modulus characteristics of the phase splitters considering coil losses. It is demonstrated that the circuits of the equilibrium and nonequilibrium type are equivalent from the point of view of the loss effect. Beginning with the Q-factors $Q \geq 50$, the loss effect can be neglected. There are three illustrations and a two-entry bibliography.

1/1

APPROVED FOR RELEASE: 09/01/2001 CIA-RDP86-00513R002202020003-0"

"APPROVED FOR RELEASE: 09/01/2001 CIA-RDP86-00513R002202020003-0

USSR

MOLODCHENKO, G. A., MEL'NIKOVA, L. A.

"Problem of Investigation of Crack Formation in Silo Walls"

Raschet. Konstruktsiy Silos. Sooruzh. [Design of Silo Structures -- Collection of Works], Kiev, Budivel'nik Press, 1972, pp 25-41, (Translated from Referativnyy Zhurnal, Mekhanika, No 10, 1972, Abstract No 10 V1008 by the author's).

Translation: A method is described and results are presented from experiments using centrally extended reinforced concrete specimens with one periodic-profile rod. The percentage of reinforcement was varied (up to 2.5%). The length of specimens was based on the condition of introduction of least error in determination of the distance between cracks and differed for all three series. In all, 12 long and 3 short specimens were tested, weakened by artificial cracks. Results are presented from studies of l_T, ψ_a, a_T and other parameters. 11 Biblio. Refs.

1/1

APPROVED FOR RELEASE: 09/01/2001 CIA-RDP86-00513R002202020003-0"

"APPROVED FOR RELEASE: 09/01/2001 CIA-RDP86-00513R002202020003-0

USSR

MEL'NIKOVA, L. A.

"Determination of Forces in the Walls of a Silo Shell Using Moment Theory"

Raschet. Konstruktsiy Silos. Sooruzh. [Design of Silo Structures -- Collection of Works], Kiev, Budivel'nik Press, 1972, pp 10-19, (Translated from Referativnyy Zhurnal, Mekhanika, No 10, 1972, Abstract No 10 V1007, by the author).

Translation: The technical moment theory is used to develop a method to determine forces in the walls of silos. Differential equations for a closed circular cylindrical shell for displacements ω, v and u are produced. The equations are solved successively by the method of finite differences for each displacement, using the conditions on the contour. The displacements found are used to determine the forces. The method allows silos to be designed for all loads and contour conditions. Computer calculations are recommended.

1/1

APPROVED FOR RELEASE: 09/01/2001 CIA-RDP86-00513R002202020003-0"

"APPROVED FOR RELEASE: 09/01/2001 CIA-RDP86-00513R002202020003-0

USSR UDC: 537.5:621.315.592

ANNAYEV, R. G., MEL'NIKOVA, L. L., Turkmen State University imeni A. M. Gor'kiy

"On Conversion of n-GaSb Under Electron Bombardment"

Ashkhabad, Izvestiya Akademii Nauk Turkmenskoy SSR: Seriya Fiziko-Tekhnicheskikh, Khimicheskikh i Geologicheskikh Nauk, No 2, 1972, pp 103-104

Abstract: The authors investigate the electrophysical properties of n-gallium antimonide irradiated with fast electrons. The specimens were doped with tellurium to an electron concentration of $(1-8)\cdot 10^{17}$ per cc. The Hall coefficient was measured at 77-300°K with increasing doses of fast electrons with an energy of about 3.75 MeV. The Hall mobility was determined as the product of the Hall coefficient and conductivity. The results are tabulated for electron doses up to $1.4\cdot 10^{17}$ electrons per sq. cm. It was found that the Hall coefficient increases and the mobility decreases with exposure to fast electrons. Exposure to the highest dose results in an anomalously low Hall

1/2

APPROVED FOR RELEASE: 09/01/2001 CIA-RDP86-00513R002202020003-0"

"APPROVED FOR RELEASE: 09/01/2001 CIA-RDP86-00513R002202020003-0

USSR

ANNAYEV, R. G., MEL'NIKOVA, L. L., IAN TurkmSSR: Ser. Fiz.-Tekh., Khim. i Geol. Nauk, No 2, 1972, pp 103-104

coefficient, low Hall mobility, and a reversal in the sign of the Hall emf. This conversion of conductivity from n-type to p-type is possibly due to the fact that many more acceptors than donors are formed under electron bombardment. The reduction in mobility may be due to an increase in the concentration of defects and to the lower phonon mobility because of the larger effective mass of holes as compared with electrons. The authors thank E. P. Gofman for furnishing the specimens. One table, bibliography of two titles.

2/2

APPROVED FOR RELEASE: 09/01/2001 CIA-RDP86-00513R002202020003-0"

"APPROVED FOR RELEASE: 09/01/2001 CIA-RDP86-00513R002202020003-0

USSR

UDC 547.859:577.150.13 + 577.164.12

BEREZOVSKIY, V. M., and MEL'NIKOVA, L. M., All Union Scientific Vitamine Research Institute

"Nucleotides, Coenzymes, and Phosphoric Esters. XXVII. Synthesis of 2-Thioflavinemononucleotide and 2-Thioflavineadeninedinucleotide"

Leningrad, Zhurnal Obshchey Khimii, Vol 43 (105), No 4, Apr 73, pp 921-926

Abstract: A practical synthetic method has been developed for 2-thioriboflavine-5'-monophosphate based on phosphorylation of 2-thioriboflavine with hydrated phosphorus oxychloride in a stream of nitrogen at 20° without protection of the secondary hydroxyl group. The isolation of the product was carried out in presence of butyloxytoluene acting as an antioxidant. Condensing tri-n-octylammonium salt of 2-thioriboflavine-5'-monophosphate with 4-morpholine-N,N'-dicyclohexylcarboxyamidinium salt of adenosine-5'-phosphomorpholide let to the synthesis of 2-thioflavineadeninedinucleotide. The reaction was carried out in anhydrous pyridine and dimethylformamide at 50-55° in presence of butyloxytoluene as an antioxidant.

1/1

APPROVED FOR RELEASE: 09/01/2001 CIA-RDP86-00513R002202020003-0"

"APPROVED FOR RELEASE: 09/01/2001 CIA-RDP86-00513R002202020003-0

1/2 010 UNCLASSIFIED PROCESSING DATE--11DEC70

TITLE--NUCLEOTIDES, COENZYMES, AND PHOSPHORUS ESTERS. XXIII. SYNTHESIS OF NICOTINAMIDE ADENINE DINUCLEOTIDE AND ANALOGS FLAVINE NICOTINAMIDE

AUTHOR-(02)-MELNIKOVA, L.M., BEREZOVSKIY, V.M.

M

COUNTRY OF INFO--USSR

SOURCE--ZH. OBSHCH. KHIM. 1970, 40(4), 918-23

DATE PUBLISHED--------70

SUBJECT AREAS--CHEMISTRY, BIOLOGICAL AND MEDICAL SCIENCES

TOPIC TAGS--NUCLEOTIDE, COENZYME, CHEMICAL SYNTHESIS, PHOSPHATE

CONTROL MARKING--NO RESTRICTIONS

DOCUMENT CLASS--UNCLASSIFIED

PROXY FICHE NO----FD70/605006/F08 STEP NO--UR/0079/70/040/004/0918/0923

CIRC ACCESSION NO--APC139823

UNCLASSIFIED

APPROVED FOR RELEASE: 09/01/2001 CIA-RDP86-00513R002202020003-0"

"APPROVED FOR RELEASE: 09/01/2001 CIA-RDP86-00513R002202020003-0

UNCLASSIFIED PROCESSING DATE--11DEC70

2/2 010

CIRC ACCESSION NO--AP0139823

ABSTRACT/EXTRACT--(U) GP-0- ABSTRACT. UNDER CONDITIONS THAT EXCLUDE THE POSSIBILITY OF RECOMBINATION IWTH ADENOSINE 5 PRIME PHOSPHATE, IN TESTS WITH ALC. DEHYDROGENASES, FLAVINE NICOTINAMIDE DINUCLEOTIDE (I) AND THIAMINE N (BETA D RIBOFURANOSYL)NICOTINAMIDE 5 PRIME PYROPHOSPHATE (II) DO NOT HAVE ANY COENZYME OR INHIBOTOR PROPERTIES. ADENOSINE 5 PRIME PHOSPHATE AND MORPHOLINE, WITH N, N PRIME DICYCLOHEXYLCARBODIIMIDE, GAVE ADENOSINE 5 PRIME PHOSPHOROMORPHOLIDE, WHICH WITH N (BETA D RIBOFURANOSYL)NICOTIANMIDE 5 PRIME PHOSPHATE (III) IN ME SUB2 SO AND (C SUB8 H SUB17)SUB3 N 3 DAYS GAVE 5PERCENT NAD, ALSO PREPD. IN 8.2PERCENT YIELD FROM III AND ADENOSINE PHOSPHATE WITH DI P TOLYLCARBODIIMIDE IN 3 DAYS. III AND THIAMINE MONOPHOSPHATE IN THE PRESENCE OF (CF SUB3 PRIME NEGATIVE CO)SUB2 O 3 DAYS, THEN KEPT 1 DAY IN ET SUB2 O AFTER AVAPN., FOLLOWED BY NH SUB3 IN ABS. ETOH 1 DAY AT 0DEGREES, GAVE P PRIME1 THIAMINE P PRIME1 (N (BETA D RIBOFURANOSYL)NICOTINAMIDE) 5 PRIME PYROPHOSPHATE, WHICH HEATED 1 HR WITH CONCD. HCL GAVE NICOTINAMIDE, D RIBOSE AND INORG. PHOSPHATE BESIDES THIAMINE PHOSPHATE. SIMILARLY WAS PREPD. FRO 4 RIBOFLAVINE MONOPHOSPHATE THE P PRIME1 (5 RIBOFLAVINE) P PRIME2 (N (BETA D RIBOFURANOSYL)NICOTINAMIDE) 5 PRIME PYROPHOSPHATE OR FLAVINE NICOTINAMIDE DINUCLEOTIDE. REDN. OF NAD AND ITS ANALOGS WAS DONE WITH YEAST ALC. DEHYDROGENASE. FACILITY: VSES. NAUCH. ISSLED. VITAMIN INST., MOSCOW, USSR.

UNCLASSIFIED

APPROVED FOR RELEASE: 09/01/2001 CIA-RDP86-00513R002202020003-0"

"APPROVED FOR RELEASE: 09/01/2001 CIA-RDP86-00513R002202020003-0

USSR

UDC 620.193.01"659.29

ANDREYEVA, V. V., GLUKHOVA, A. I., DONTSOV, S. N., MOISEYEVA, I. S., and MEL'NIKOVA, L. V., Institute of Physical Chemistry, Academy of Sciences USSR

"Corrosion Resistance and Electrochemical and Mechanical Properties of Trinary Nb-Ti-Ta and Nb-Ti-Cr Alloys"

Moscow, Zashchita Metallov, No 4, 1972, pp 415-419

Abstract: Binary alloys of Nb+Ta are highly resistant to solutions of strong acids. These alloys are quite promising for the manufacture of important parts of chemical apparatus. It was assumed that the presence of tantalum in binary Nb-Ti alloys should increase their corrosion resistance without reducing mechanical and technological characteristics. An experimental study was therefore made of the influence of the individual elements on the corrosion resistance and electrochemical and mechanical properties of certain trinary niobium-based alloys with titanium, tantalum, and chromium. The corrosion resistance of Nb-Ti-Ta alloys in solutions of sulfuric and hydrochloric acid at 100°C decreases with increasing titanium content, with tantalum content remaining constant. The addition of 1 to 5% chromium to niobium has no influence on its resistance ot these acids, but reduces workability in the hot and cold states. Addition of chromium to Nb-Ti alloys can produce alloys with good technological properties. The chromium significantly increases the

APPROVED FOR RELEASE: 09/01/2001 CIA-RDP86-00513R002202020003-0"

"APPROVED FOR RELEASE: 09/01/2001 CIA-RDP86-00513R002202020003-0

USSR

ANDREYEVA, V. V., et al., Zashchita Metallov, No 4, 1972, pp 415-419

strength characteristics at high temperatures. Addition of chromium also increases the hardness of case alloys. Dendritic liquation occurs in alloys containing 30 and 40% Ti and 4-5% Cr. Addition of up to 5% chromium to Nb-Ti alloys does not worsen acid resistance, but increases mechanical characteristics.

2/2

APPROVED FOR RELEASE: 09/01/2001 CIA-RDP86-00513R002202020003-0"

"APPROVED FOR RELEASE: 09/01/2001 CIA-RDP86-00513R002202020003-0

USSR UDC 669.295.5.018.5.537.312.62

BAYKOV, A. I., KUZNETSOVA, M. I., SHADSKIY, D. V., MEL'NIKOVA, L. V., MIKHAYLOV, S. M., GORBACHEVA, L. S.

"Technological and Superconducting Properties of 60 T Alloy"

Probl. Sverkhprovodyashch. Materialov [Problems of Superconducting Materials -- Collection of Works], Moscow, Nauka Press, 1970, pp. 193-202. (Translated from Referativnyy Zhurnal Metallurgiya, No. 5, 1971, Abstract No. 5 I791 by the authors).

Translation: The technological and superconducting properties of 60 T alloy are studied. The dependence of mechanical properties on the degree of cold deformation and diameter of wire is shown. The mechanism of deformation of the alloy at high temperatures is studied. It is established that the high plastic properties of the alloy allow cold drawing of wire to be performed at a rate of 100 m/min. The influence of intermediate annealing and hardening, as well as final annealing, on the critical current density is studied as a function of the external magnetic field. 7 figs; 4 tables; 4 biblio refs.

1/1

APPROVED FOR RELEASE: 09/01/2001 CIA-RDP86-00513R002202020003-0"

"APPROVED FOR RELEASE: 09/01/2001 CIA-RDP86-00513R002202020003-0

USSR UDC: 537.312.62

2

BAYKOV, A. I., KUZNETSOVA, M. I., SHADSKIY, D. V., MEL'NIKOVA, L. V., MIKHAYLOV, S. M., GORBACHEVA, L. S.

"Technological and Superconducting Properties of 60T Alloy"

V sb. Probl. sverkhprovodyashch. materialov (Problems of Superconducting Materials--collection of works), Moscow, "Nauka", 1970, pp 193-202 (from RZh-Radiotekhnika, No 5, May 71, Abstract No 5D555)

Translation: This article deals with the technological superconducting properties of 60T alloy. It is shown how the mechanical properties depend on the degree of cold deformation and the diameter of the wire. The mechanism of deformation of the alloy at high temperatures is considered. It is found that the high plastic properties of the alloy permit cold drawing of wire at a rate of 100 m/min. An investigation is made of the effect which intermediate annealing and quenching as well as final annealing have on the density of the critical current as a function of the external magnetic field. Seven illustrations, four tables, bibliography of four titles. Resumé.

1/1

APPROVED FOR RELEASE: 09/01/2001 CIA-RDP86-00513R002202020003-0"

"APPROVED FOR RELEASE: 09/01/2001 CIA-RDP86-00513R002202020003-0

Materials

USSR

UDC: 537.312.62

BAYKOV, A. I., KUZNETSOVA, M. I., MEL'NIKOVA, L. V.

"Mechanical and Superconducting Properties of Alloys in the Niobium-Titanium System and Their Field of Application"

Nauchn. tr. N.-i. i proyektn. in-t redkomet. prom-sti (Scientific Works of the Scientific Research and Design Institute of the Rare Metals Industry), 1971, 32, pp 98-110 (from RZh-Radiotekhnika, No 5, May 71, Abstract No 5D532)

Translation: Alloys in the niobium-titanium system with a titanium concentration of more than 40 percent (atomic) have a higher critical magnetic field (H_{k2}) than in the case of niobium-zirconium and niobium-titanium-zirconium alloys. The highest magnetic field is attained on an alloy with 60 percent (atomic) titanium. 60T alloy wire is used for making superconducting solenoids. Ten illustrations, three tables, Bibliography of nine titles. Resumé.

1/1

APPROVED FOR RELEASE: 09/01/2001 CIA-RDP86-00513R002202020003-0"

"APPROVED FOR RELEASE: 09/01/2001 CIA-RDP86-00513R002202020003-0

USSR UDC 669.293.5.294.018.8.669.018.2

DONTSOV, S. N., MOISEYEVA, I. S., MEL'NIKOVA, L. V., GLUKHOVA, A. I., ANDREYEVA, V. V., ALESHINA, L. V., STRIZHEVSKAYA, L. G.

"Influence of Technological Factors on Corrosion Resistance and Mechanical Properties of Niobium-Tantalum Alloys"

Nauchn. Tr. N-i. i Proyektn. In-t Redkomet. Prom-sti [Scientific Works of Scientific Research and Planning Institute for the Rare Metals Industry], 1971, Vol. 32, pp. 152-160. (Translated from Referativnyy Zhurnal Metallurgiya, No. 5, 1971, Abstract No. 5 I736 by the authors).

Translation: Influence of technological factors on the corrosion resistance of Nb-Ta alloys is studied. 4 figs; 5 biblio refs.

1/1

APPROVED FOR RELEASE: 09/01/2001 CIA-RDP86-00513R002202020003-0"

"APPROVED FOR RELEASE: 09/01/2001 CIA-RDP86-00513R002202020003-0

USSR UDC 669.293.5.784.018.44.621.785

TIKHONOVA, G. S., MEL'NIKOVA, L. V., ZHELEZNYAK, O. N., KONOVALOV, S. V.

"Structure and Mechanical Properties of Alloys of Niobium With Carbon as Functions of Heat Treatment"

Nauchn. Tr. N-i. i Proyektn. In-t Redko met. Prom-sti [Scientific Works of Scientific Research and Planning Institute for the Rare Metals Industry], 1971, Vol. 32, pp. 50-56. (Translated from Referativnyy Zhurnal Metallurgiya, No. 5, 1971, Abstract No. 5 I737 by the authors).

Translation: The alloy 5VMTs with 0.05% C is heterogeneous in its structure. The mechanical properties of the sheet material at high temperatures depend on the phase composition, resulting from the heat treatment mode. 2 figs; 3 tables; 4 biblio refs.

1/1

APPROVED FOR RELEASE: 09/01/2001 CIA-RDP86-00513R002202020003-0"

"APPROVED FOR RELEASE: 09/01/2001 CIA-RDP86-00513R002202020003-0

USSR UDC 669.293.5.295.018.5.537.312.62

BAYKOV, A. I., KUZNETSOVA, M. I., MEL'NIKOVA, L. V.

"Mechanical and Superconducting Properties of Alloys in the Niobium-Titanium System and Area of Their Application"

Nauchn. Tr. N-i. i Proyektn. In-t Redkomet. Prom-sti [Scientific Works of Scientific Research and Planning Institute for the Rare Metals Industry], 1971, Vol. 32, pp. 98-110. (Translated from Referativnyy Zhurnal Metallurgiya, No. 5, 1971, Abstract No. 5 I782 by the authors).

Translation: Alloys in the system Nb-Ti with contents of Ti > 40 at.% have higher critical magnetic field than the alloys Nb-Zr and Nb-Ti-Zr. The highest magnetic field is produced in the alloy with 60 at.% Ti. A wire of this 60 T alloy has been used in the manufacture of superconducting solonoids. 10 figs; 3 tables; 9 biblio refs.

1/1

APPROVED FOR RELEASE: 09/01/2001 CIA-RDP86-00513R002202020003-0"

"APPROVED FOR RELEASE: 09/01/2001 CIA-RDP86-00513R002202020003-0

USSR

UDC 669.293.018.44/45

OZEROVA, Ye. I., MEL'NIKOVA, L. V.

"Metallographic Study of Microirregularities of Certain Niobium-Based Alloys"

Nauchn. Tr. N-i. i Proyektn. In-t Redkomet. Prom-sti [Scientific Works of Scientific Research and Planning Institute for the Rare Metals Industry], 1971, Vol. 32, pp.28-34. (Translated from Referativnyy Zhurnal Metallurgiya, No. 5, 1971, Abstract No. 5 I735 by the authors).

Translation: Nb Alloys show a tendency toward formation of low-angle polygonization boundaries in the cast, deformed, and annealed states. 4 figs.

1/1

APPROVED FOR RELEASE: 09/01/2001 CIA-RDP86-00513R002202020003-0"

"APPROVED FOR RELEASE: 09/01/2001 CIA-RDP86-00513R002202020003-0

USSR

UDC 669.28.5.849.1.018.44.620.186

PIKUNOV, M. V., DANILINA, T. B., MEL'NIKOVA, L. V., DESIPRI, A. I.

"Investigation of the Structure and Certain Properties of Alloys Based on the Molybdenum-Rhenium System"

Nauchn. Tr. N-i. i Proyektn. In-t Redkomet. Prom-sti [Scientific Works of Scientific Research and Planning Institute for the Rare Metals Industry], 1971, Vol. 32, pp. 22-28. (Translated from Referativnyy Zhurnal Metallurgiya, No. 5, 1971, Abstract No. 5 I718 by the authors).

Translation: The metallographic structure of the alloy Mo-50% Re-50% Fe, produced in an arc furnace with a nonconsumable electrode, is studied in detail. A method of preparation of sections and etching conditions are developed for this purpose. It is demonstrated that this alloy, depending on the conditions of heat treatment, may be either a one-or a two-phase alloy with the corresponding changes in properties. Physical heterogeneity of ingots is detected, related to the conditions of solidification and manifested as sharp differences in dendritic structure. This heterogeneity causes differences in hardness in various sectors of the ingot. The possibility of deformation of the alloy by hot pressing and impact upsetting is studied. 3 figs; 4 tables, 5 biblio refs.

1/1

APPROVED FOR RELEASE: 09/01/2001 CIA-RDP86-00513R002202020003-0"

"APPROVED FOR RELEASE: 09/01/2001 CIA-RDP86-00513R002202020003-0

USSR UDC 577.1:615.7/9

KARAMZINA, N. M., and MEL'NIKOVA, L. V.

"Some Initial Reaction of the Animal Endocrine System to Repeated Exposure to m-Aminobenzotrifluoride at Low Concentrations"

V sb. Toksikol. novykh prom. khim. veshchestv (Toxicology of New Industrial Chemicals -- collection of works), No 12, Moscow, "Meditsina," 1971, pp 20-23 (from RZh-Biologicheskava Khimiva, No 14, Jul 71, Abstract No 14 F1623)

Translation: Rats inhaled m-aminobenzotrifluoride (I, 0.0014 mg/l, once or 5 times for 4 hours a day). Thyroid function was judged from I^{131} uptake while the activity of the hypophyseal-adrenal system was evaluated from the amount of ascorbic acid in the adrenals and their weight factor. After exposure to I, the amount of I^{131} taken up was found to increase significantly from 20.9 to 29.5% 4 hours after a single exposure and from 21.4 to 26.3% 24 hours after 5 exposures. No changes were observed in adrenal function. The authors believe that the functional changes in the thyroid after 5 days' exposure to I are the initial manifestation of chronic poisoning.

1/1

APPROVED FOR RELEASE: 09/01/2001 CIA-RDP86-00513R002202020003-0"

"APPROVED FOR RELEASE: 09/01/2001 CIA-RDP86-00513R002202020003-0

USSR UDC 669.293.5:669.295.5

BAYKOV, A. I., KUZNETSOVA, M. I., SHADSKIY, D. V., MEL'NIKOVA, L. V., MIKHAYLOV, S. M., and BORBCHEVA, L. S.

"Technological and Superconducting Properties of 60T Alloy"

Problemy Sverkhprovodyashchikh Materialov [Problems of Superconducting Materials -- Collection of Works], Moscow, Nauka Press, 1970, pp 193-202

Translation: The article studies the technological and superconducting properties of 60T alloy. The dependence of mechanical properties on the degree of cold deformation and diameter of the wire is demonstrated.

The mechanism of deformation of the alloy at high temperatures is studied. It is established that the high plastic properties of the alloy allow cold drawing of wire at 100 m/min. The influence of intermediate annealing and hardening and of final annealing on critical current density as a function of external magnetic field is studied.

7 figures, 4 tables, 4 biblio. refs.

1/1

APPROVED FOR RELEASE: 09/01/2001 CIA-RDP86-00513R002202020003-0"

"APPROVED FOR RELEASE: 09/01/2001 CIA-RDP86-00513R002202020003-0

USSR

UDC: 577.150.13; 577.164.11-12

MEL'NIKOVA, L.M., and BEREZOVSKIY, V.M., All-Union Scientific Research Vitamins Institute, Moscow, Ministry of Health USSR

"Nucleotides, Coenzymes, Phosphoric Esters. XXIII. Synthesis of Nicotinamide Adenine Dinucleotide and Analogs -- Flavin Nicotinamide Dinucleotide and Thiamine Nicotinamide Nucleoside Diphosphate"

Leningrad, Zhurnal Obshchey Khimii, Vol 40, No 4, Apr 70, pp 918-923

Abstract: Continuing their work on the chemistry of asymmetrically constructed pyrophosphates of the nucleotide coenzyme type, the authors synthesized NAD by condensation of nicotinamide mononucleotide (NMN) with adenosine-5'-phosphomorpholide in a solution of anhydrous dimethyl sulfoxide or in a mixture of anhydrous pyridine and dimethylformamide (2 : 1), as well as by condensation of NMN with adenosine-5'-monophosphate in a trifluoroacetic anhydride medium or in the presence of di-p-tolylcarbodiimide in aqueous pyridine. Thiamine nicotinamide nucleoside diphosphate (TNDP) and flavin nicotinamide dinucleotide (FND) were synthesized by condensation of NMN with thiamine

1/2

APPROVED FOR RELEASE: 09/01/2001 CIA-RDP86-00513R002202020003-0"

"APPROVED FOR RELEASE: 09/01/2001 CIA-RDP86-00513R002202020003-0

USSR

MEL'NIKOVA, L. M., and BEREZOVSKIY, V. M., Zhurnal Obshchey Khimii, Vol 40, No 4, Apr 70, pp 918-923

monophosphate and riboflavin mononucleotide respectively in a medium of aqueous pyridine or trifluoroacetic anhydride. It was found that under conditions which exclude the possibility of recombination with adenosine-5'-monophosphate in tests with yeast alcohol dehydrogenase, FND and TNDP do not possess coenzymatic or inhibitory properties.

2/2

APPROVED FOR RELEASE: 09/01/2001 CIA-RDP86-00513R002202020003-0"

"APPROVED FOR RELEASE: 09/01/2001 CIA-RDP86-00513R002202020003-0

USSR

UDC 532.525.6

MEL'NIKOVA, M. F., NESTEROV, YU. N.

"Action of a Nondesign Supersonic Flow on a Plane Obstacle Perpendicular to the Axis of the Flow"

Uch. zap. Tsentr. aero-gidrodinam. in-ta (Scientific Notes of the Central Aerodynamics Institute), 1971, Vol. 2, No. 5, pp 105-108 (from RZh-Aviatsionnyye i raketnyye dvigateli, No 4, Apr 72, Abstract No 4.34.91)

Translation: The results of an experimental study of the inflow of a nondesign supersonic flow on a plane obstacle placed perpendicular to the axis of the flow in direct proximity to the end of the nozzle are presented. The effect of the flow parameters on the end of the nozzle and on the gasdynamic action on the obstacle is shown. Empirical formulas are given for constructing a pressure diagram at the obstacle and the limits of their application are indicated. 5 ill., 5 ref. Resume.

1/1

APPROVED FOR RELEASE: 09/01/2001 CIA-RDP86-00513R002202020003-0"