"APPROVED FOR RELEASE: 09/01/2001 CIA-RDP86-00513R002202020014-8

UDC 517.9

USSR

MIKELADZE, SH. E., Academician of the Georgian Academy of Sciences, Tbilisi
Mathematics Institute imeni A. M. Razmadze of the Georgian Academy of Sciences,
Tbilisi State University

"Discontinuous Solutions to Ordinary Differential Equations"

Tbilisi, Soobshcheniya Akademii Nauk Gruzinskoy SSR, Vol 59, No 2, Aug 70,
pp 269-272

Abstract: The author considers an nth-order linear differential equation

$$y^{(n)} + \sum_{\nu=0}^{n-1} X_{n-\nu} y^{(\nu)} = X, \qquad (1)$$

whose coefficients $X_{n-\nu}$ and X are single-valued and piecewise continuous for any x in the interval $a \leq x \leq b$. The theory of finding discontinuous solutions to this equation with given boundary conditions and with jumps d_{s}^{ν} ($\nu = 0, 1, \ldots, n-1$) at the discrete points a_s ($s = 1, 2, \ldots, m$) in the interval [a, b] is one of the important problems of mathematical analysis. It has many engineering applications, especially in construction mechanics. By applying an expansion developed in previous works, the author obtains the following integral equation:

1/3

APPROVED FOR RELEASE: 09/01/2001 CIA-RDP86-00513R002202020014-8"

"APPROVED FOR RELEASE: 09/01/2001 CIA-RDP86-00513R002202020014-8

USSR

MIKELADZE, SH. E., Soobshcheniya Akademii Nauk Gruzinskoy SSR, Vol 59, No 2, Aug 70, pp 269-272

$$y^{(n)}(x) = \int_a^x K(x, t)\, y^{(n)}(t)\, dt + f(x), \qquad (2)$$

where the kernel K and the function f can be expressed respectively in the forms

$$K(x, t) = -X_1 - X_2 \frac{x-t}{1!} - \ldots - X_n \frac{(x-t)^{n-1}}{(n-1)!}$$

$$a \leq x \leq b, \quad a \leq t \leq b,$$

$$f(x) = X - X_n y(a) -$$

$$- \left[X_n \frac{x-a}{1!} + X_{n-1} \right] y'(a) - \ldots$$

$$\ldots - \left[X_n \frac{(x-a)^{n-1}}{(n-1)!} + X_{n-1} \frac{(x-a)^{n-2}}{(n-2)!} + \ldots + X_1 \right] y^{(n-1)}(a) -$$

2/3

APPROVED FOR RELEASE: 09/01/2001 CIA-RDP86-00513R002202020014-8"

"APPROVED FOR RELEASE: 09/01/2001 CIA-RDP86-00513R002202020014-8

USSR

MIKELADZE, SH. E., Soobshcheniya Akademii Nauk Gruzinskoy SSR, Vol 59, No 2, Aug 70, pp 269-272

$$-\sum_{s=1,2,\ldots} X_n \delta_s^s -$$

$$-\sum_{s=1,2,\ldots}\left[X_n \frac{x-a_s}{1!} + X_{n-1}\right]\delta_s^1 - \cdots$$

$$\cdots - \sum_{s=1,2,\ldots}\left[X_n \frac{(x-a_s)^{n-1}}{(n-1)!} + X_{n-1}\frac{(x-a_s)^{n-2}}{(n-2)!} + \cdots\right.$$

$$\left.\cdots + X_1\right]\delta_s^{n-1} \quad (a \leqq a_s < x \leqq b).$$

For a differential equation of type (1), with discontinuities in the interval [a, b], the coefficients of the functions f(x) and K(x, t) are discontinuous functions of x in [a, b]. This proves that for single-point boundary value problems, the integral equation (2) has a unique solution. To find this solution [illegible] [illegible] to obtain the resolvent for the kernel K(x, t).

APPROVED FOR RELEASE: 09/01/2001 CIA-RDP86-00513R002202020014-8"

"APPROVED FOR RELEASE: 09/01/2001 CIA-RDP86-00513R002202020014-8

UDC 517.91/943

USSR

MIKELADZE, Sh. Ye., Academician, Academy of Sciences of the Georgian SSR, Tbilisi Mathematics Institute imeni A. M. Razmadze

"Construction of Discontinuous Solutions of Linear Differential Equations for Multiple-Point Boundary Value Problems"

Tbilisi, Soobshcheniya Akademii Nauk Gruzinskoy SSR, Vol 67, No 3, Sep 72, pp 529-532

Abstract: Let y(x) be a function which is piecewise-continuous over the entire interval [a,b] together with its first n derivatives. Then there exists a unique expansion

$$y^{(k)}(x) = \sum_{\nu=0}^{n-k-1} \frac{(x-a)^\nu}{\nu!} y^{(k+\nu)}(a) + \sum_{\nu=k}^{n-1} \frac{1}{(\nu-k)!} \sum_{s=1,2,\ldots} \delta_s^\nu (x-a_s)^{\nu-k} +$$

$$+ \int_a^x \frac{(x-t)^{n-k-1}}{(n-k-1)!} y^{(n)}(t)\,dt \qquad (k=0,1,\ldots,n-1), \qquad (1)$$

1/3

APPROVED FOR RELEASE: 09/01/2001 CIA-RDP86-00513R002202020014-8"

"APPROVED FOR RELEASE: 09/01/2001 CIA-RDP86-00513R002202020014-8

USSR

MIKELADZE, Sh. Ye., Soobshcheniya Akademii Nauk Gruzinskoy SSR, Vol 67, No 3, Sep 72, pp 529-532

defined for $a \leq x \leq b$, where δ_s^ν is a symbol which is equal to the jump in $y^{(\nu)}(x)$ at point a_s of segment $[a,b]$ if $x \geq a_s$, and equal to zero if $x < a_s$. The solution of the Cauchy problem for the differential equation

$$y^{(n)} + \sum_{\nu=0}^{n-1} X_{n-\nu} y^{(\nu)} = X \qquad (2)$$

with coefficients $X_{n-\nu}$, X which are single-valued and piecewise-continuous with respect to x, with initial data $y^{(k)}(a)$ $(k = 0, 1, \ldots, n-1)$ and discontinuities δ_s^ν at points a_s satisfies the relation

$$y^{(n)}(x) = \int_a^x K(x, t)\, y^{(n)}(t)\, dt + f(x). \qquad (3)$$

In this paper the author investigates methods of constructing discontinuous solutions with discontinuous derivatives of multiple-point boundary value

2/3

APPROVED FOR RELEASE: 09/01/2001 CIA-RDP86-00513R002202020014-8"

"APPROVED FOR RELEASE: 09/01/2001 CIA-RDP86-00513R002202020014-8

USSR

MIKELADZE, Sh. Ye., Soobshcheniya Akademii Nauk Gruzinskoy SSR, Vol 67, No 3, Sep 72, pp 529-532

problems for (2) which satisfy boundary conditions given both at the end points and at some internal points of [a,b]. The concept of auxiliary derivatives is introduced. These auxiliary derivatives are linearly related by the boundary conditions, expansion (1), and integral equation (3). A future paper will give solutions for problems on eigenvalues for (2) with coefficients which depend on the variable x and definable parameters.

3/3

APPROVED FOR RELEASE: 09/01/2001 CIA-RDP86-00513R002202020014-8"

"APPROVED FOR RELEASE: 09/01/2001 CIA-RDP86-00513R002202020014-8

USSR UDC: 669.721.042.26

MISHCHENKO, V. D., MIKEL'SON, A. E.

"Immersible Electromagnetic Pump for Magnesium Alloys"

MGD v Metallurgii i Liteyn. Proiz-ve [MHD in Metallurgy and Foundry Production -- Collection of Works], Kiev, 1972, pp 119-122 (Translated from Referativnyy Zhurnal Metallurgiya, No 8, 1973, Abstract No 8G201, by G. Svodtseva).

Translation: An immersible electromagnetic pump, model KEMN-3M, allows the ingots of Mg alloys to be poured in all necessary sizes, since the delivery of the pump can be varied from 0 to the maximum value at the moment of tapping. The economic effect of the use of this pump at one plant was over 60,000 rubles per year. Installation of the pump eliminated the operation of pump startup and made it possible to increase the productivity of melting and pouring units. 3 figures, 3 biblio. refs.

1/1

APPROVED FOR RELEASE: 09/01/2001 CIA-RDP86-00513R002202020014-8"

"APPROVED FOR RELEASE: 09/01/2001 CIA-RDP86-00513R002202020014-8

Power, Turbine, Engine, Pump

USSR

UDC: 621.313.3:538.4

MIKEL'SON, A. E., MISHCHENKO, V. D.

"A Conduction Pump for Handling Magnesium"

Riga, Magnitnaya Gidrodinamika, No 3, Jul-Sep, 1971, pp 125-129

Abstract: The paper describes the theoretical design and experimental testing of a submersible AC conduction pump for magnesium. The unit is used for continuous pumping of magnesium from the melting furnace to a continuous teeming installation. A diagram of the pump is shown in the figure. A straight-flow flat channel with inlet 4 is located between two stacks of steel transformer plates 3. Supply current from a step-down transformer is applied to busbars 2. The magnetic flux induced by the current is shorted through the stacks of steel plates and the closed magnetic circuit 5 which surrounds the channel and is in tight contact with the stacks. Interaction between the current in the channel and the magnetic field induced by this current in the gap between the stacks creates a body force which moves the molten metal from the inlet 4 to the outlet 1 of the channel. Five illustrations, bibliography of two titles.

1/2

APPROVED FOR RELEASE: 09/01/2001 CIA-RDP86-00513R002202020014-8"

"APPROVED FOR RELEASE: 09/01/2001 CIA-RDP86-00513R002202020014-8

USSR

MIKEL'SON, A. E., MISHCHENKO, V. D., Magnitnaya Gidrodinamika, No 3, Jul-Sep 1971, pp 125-129

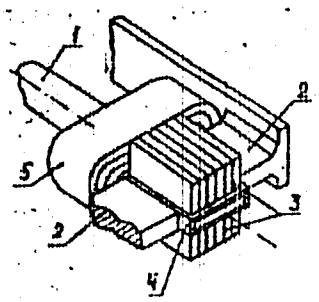

2/2

APPROVED FOR RELEASE: 09/01/2001 CIA-RDP86-00513R002202020014-8"

"APPROVED FOR RELEASE: 09/01/2001 CIA-RDP86-00513R002202020014-8

USSR

UDC 669.7/.8.4(088.8)

MIKEL'SON, A. E., and SHUNKIN, V. N., Institute of Physics, Academy of Sciences of the Latvian SSR, All-Union Institute of Light Alloys

"Electromagnetic Device for the Refining and Degassing of Molten Metals and Alloys"

USSR Author's Certificate No 263834, filed 7 Feb 68, published 10 Jun 70 (from RZh-Metallurgiya, No 11, Nov 70, Abstract No 11 G86)

Translation: An electromagnetic device is proposed for the refining and degassing of molten metals and alloys. The device consists of a crucible, placed between blocks for ferromagnetic materials, and a cooling inductor. To increase the quality of refining, the device is equipped with an additional cooling inductor which is positioned coaxially to the first one and is connected to the source of alternating current, whose frequency is lower than that of the current source of the first inductor.

1/1

APPROVED FOR RELEASE: 09/01/2001 CIA-RDP86-00513R002202020014-8"

"APPROVED FOR RELEASE: 09/01/2001 CIA-RDP86-00513R002202020014-8

UDC: 8.74

USSR

MIKEL'SON, V. R., PETRENKO, A. F.

"Minimizing the Number of Operators in an Algorithm Scheme"

Riga, Vopr. sinteza konechn. avtomatov--sbornik (Problems of Synthesizing Finite Automata--collection of works), "Zinatne", 1972, pp 33-39 (from RZh-Kibernetika, No 10, Oct 72, abstract No 10V624 [authors' résumé])

Translation: The paper deals with the problem of minimizing the number of operators in an algorithm flowchart. The concept of incompatibility of operators and the graph of operator incompatibility are introduced. The problem of minimizing the number of operators is reduced to coloring the vertices of the graph of operator incompatibility.

1/1

APPROVED FOR RELEASE: 09/01/2001 CIA-RDP86-00513R002202020014-8"

"APPROVED FOR RELEASE: 09/01/2001 CIA-RDP86-00513R002202020014-8

JPRS 60634
27 November 1973

EFFECT OF THE CURRENT LOAD ON THE THERMAL CONDITIONS OF A MAGNETOHYDRODYNAMIC MACHINE

[Abstract of a Paper by Yu. Ya. Mikel'son, Yu. P. Ushakov, T. I. Tsirulis, E. P. Shilzer, Ya. P. [illegible] Given at the Magnetohydrodynamic Conference, p 145]

For large current loads in magnetohydrodynamic machines and active heat exchange between the structural elements of the device and the external environment, nonlinear thermal effects can play a significant role.

In this paper an effort was made to calculate the nonlinear thermal losses Q in the current-carrying elements of the structure of the conduction pump for large current loads. Here, the temperature dependence of the thermal physical parameters of the material and the thermal radiation are taken into account.

The basic assumptions are the following: the thermal losses are defined by the Joule's law in the form

$$Q = \int_V \frac{|\vec{E}|^2}{\rho(T)}\, dv, \qquad (1)$$

where $\vec{E}$ is the intensity of the electric field in the conductor,

$\rho(T)$ is the specific electrical resistance of the material which depends on the temperature. For large current loads J, the linear approximation of Joule's law

$$Q = R_0 J^2, \quad R_0 = \text{const} \qquad (2)$$

is not valid. The integral resistance R determining the energy dissipation in the current-conducting elements of the structure are calculated by the formula

$$R(J) = Q(J)/J^2. \qquad (3)$$

The dependence of the losses on the current J is uniquely defined by the distribution of the temperature T inside the conducting body considering the specific heat transfer and heat exchange methods. The thermal radiation is subject to the Stefan-Boltzman law.

10,845
CSO: 8044/0653-W

MIKEL'SON, Yu. Ya.

APPROVED FOR RELEASE: 09/01/2001 CIA-RDP86-00513R002202020014-8"

"APPROVED FOR RELEASE: 09/01/2001 CIA-RDP86-00513R002202020014-8

2

USSR

UDC 542.91:541.69:547.362:547.556.9

SHISHMAKOVA, T. G., [illegible], M. I., KONYASHEVA, N. V., [illegible], I. L., PERSHIN, G. N., and [illegible] Institute of Chemical Kinetics and Combustion, Siberian Branch Acad. Sci. USSR, and Chemical-Pharmaceutical Institute, Acad. Med. Sci. USSR

"Synthesis and Study of the Antimicrobial Activity of the Amino Derivatives of 4-Hydroxy-4'-ethynylazobenzene"

Moscow, Izvestiya Akademii Nauk SSSR, Seriya Khimicheskaya, No 4, Apr 72, pp 978-980

Abstract: 20 g of [illegible]-4'-acetylazobenzene (I) was refluxed for 8 hrs with 11.6 g K_2CO_3, [illegible] ml acetone, and 15.2 g allyl bromide, cooled, and poured into [illegible]. Solid material was obtained and after recrystallization from alcohol yield [illegible] 27.9 g 4-allyloxy-4'-acetylazobenzene (II), m. p. 130-132. (II) was hydrogenated over Pd/$CaCO_3$ to yield 4-propoxy-4'-acetylazobenzene (III), m.p. 117-120°. Chlorination of (III) followed by dehydrochlorination yields 4-propoxy-4'-ethynylazobenzene, m.p. 97-98°. Mannich condensation of that product yields 4-propoxy-4'-(piperidinopropyne-1"-yl-1")-azobenzene, m.p. [illegible]. However, the free hydroxy analogue -- 4-hydroxy-4'-ethynylazobenzene [illegible] only with difficulty via the Mannich condensation

1/2

APPROVED FOR RELEASE: 09/01/2001 CIA-RDP86-00513R002202020014-8"

"APPROVED FOR RELEASE: 09/01/2001 CIA-RDP86-00513R002202020014-8

USSR

SHISHKAKOVA, T. G., et al, Izvestiya Akademii Nauk SSSR, Seriya Khimicheskaya, No 4, Apr 72, pp 978-980

giving low yields of 4-hydroxy-4'-(morpholinopropyn-1"-yl-1")-azobenzene (VI), m.p. 250-253° and 4-hydroxy-4'-(piperidinopropyn-1"-yl-1")-azobenzene (VIII), m.p. 177-178°. (VII) showed a rather high antitubercular activity, surpassing (VI). Several analogues of (VII) were bioassayed, but none showed any activity. It was concluded that in order to have biological activity a compound must have a free hydroxyl group and a single triple bond.

2/2

APPROVED FOR RELEASE: 09/01/2001 CIA-RDP86-00513R002202020014-8"

"APPROVED FOR RELEASE: 09/01/2001 CIA-RDP86-00513R002202020014-8

UDC 547.752

USSR

VINOGRAD, L. KH., SHALYGINA, O. D., BULATOVA, N. N., KOSTYUCHENKO, N. P., ZYKOVA, T. N., MIKERINA, A. L., ARUTYUNYAN, G. S., and SUVOROV, N. N., All-Union Scientific Research Chemical and Pharmaceutical Institute imeni Sergo Ordzhonikidze, Moscow

"Indole Derivatives. Report 72. Addition of Sulfur-Containing Reagents to Nitrovinylindole"

Moscow, Khimiko-Farmatsevticheskiy Zhurnal, Vol 5, No 12, Dec 71, pp 15-17

Abstract: The addition of sulfur-containing nucleophilic reagents to unsaturated nitro-compounds of the indole series was studied. The addition reactions of seven new indole derivatives are detailed and the addition products identified. In-vitro therapeutic tests revealed a weak germistatic activity (500-250 mcg/ml) in 1-benzylmercapto-1-(1'-acetylindolyl-3)-2-aminoethane chloralhydrate relative to 17 microorganism strains. The study included general effects, effects on smooth muscles, circulation and respiration body temperature, interaction with hexenal and ipramid, antihistaminic, antispasmodic and anesthetic effects. The compound revealed weak pharmacological activity, weak spasmogenic action and slightly increased capillary permeability. It appears to promote the somnifacient effect of hexenal. The LD_{50} in intravenous administration to mice is 45 mg/kg. (1 table, 1 biblio. reference)

1/1

APPROVED FOR RELEASE: 09/01/2001 CIA-RDP86-00513R002202020014-8"

"APPROVED FOR RELEASE: 09/01/2001 CIA-RDP86-00513R002202020014-8

UDC 541.69+547.551+547.362

USSR

PERSHIN, G. N., MILOVANOVA, S. N., MINERINA, A. M., SHISHMAKOVA, I. G., BARDAMOVA, M. I., and KOTLYAREVSKIY, I. L., All-Union Chemical-Pharmaceutical Scientific Research Institute Imeni S. Ordzhonikidze, and Institute of Chemical Kinetics and Combustion of the Siberian Division of the Academy of Sciences, USSR

"Bacteriological Properties of Some Aromatic Mono- and Diacetylene Amines"

Moscow, Izvestiya Akademii Nauk SSSR, Seriya Khimicheskaya, No 8, Aug 70, pp 1904-1906

Abstract: Continuing their studies on the germistatic properties of acetylene amines, the authors report biological properties of a series of resorcine, phloroglucinol, and mesitylene derivatives. The germistatic activity was tested in vitro on 17 microorganisms. It was found that only amines with one triple bond in each aliphatic chain were active. Introduction of a second triple bond led to an almost complete inactivation of the molecule.

1/1

APPROVED FOR RELEASE: 09/01/2001 CIA-RDP86-00513R002202020014-8"

"APPROVED FOR RELEASE: 09/01/2001 CIA-RDP86-00513R002202020014-8

1/2 013 UNCLASSIFIED PROCESSING DATE--16OCT70

TITLE--INTERPLANETARY MAGNETIC FIELD FLUX AND THE KP INDEX OF MAGNETIC ACTIVITY -U-

AUTHOR-(02)-IVANOV, K.G., MIKERINA, N.V.

M

COUNTRY OF INFO--USSR

SOURCE--GEOMAGNETIZM I AERONOMIIA, VOL. 10, NO. 2, 1970, P. 331-333

DATE PUBLISHED--------70

SUBJECT AREAS--EARTH SCIENCES AND OCEANOGRAPHY

TOPIC TAGS--SPACE MAGNETIC FIELD, GEOMAGNETIC ACTIVITY

CONTROL MARKING--NO RESTRICTIONS

DOCUMENT CLASS--UNCLASSIFIED

PROXY REEL/FRAME--1997/0150 STEP NO--UR/0203/70/010/002/0331/0333

CIRC ACCESSION NO--AP0119146

UNCLASSIFIED

APPROVED FOR RELEASE: 09/01/2001 CIA-RDP86-00513R002202020014-8"

"APPROVED FOR RELEASE: 09/01/2001 CIA-RDP86-00513R002202020014-8

UNCLASSIFIED PROCESSING DATE--16OCT70

2/2 013

CIRC ACCESSION NO--AP0119146

ABSTRACT/EXTRACT--(U) GP-0- ABSTRACT. DISCUSSION OF THE RELATION BETWEEN THE INTERPLAANETARY MAGNETIC FLUX AND THE KP INDEX OF MAGNETIC ACTIVITY. SIMILARITY IS ESTABLISHED BETWEEN THE VARIATIONS OF BOTH VARIABLES IN SEPTEMBER, 1962, AND IN JANUARY, 1965. ILLUSTRATIVE DIAGRAMS ARE PLOTTED. FACILITY: AKADEMIIA NAUK SSSR, INSTITUT ZEMNOGO MAGNETIZMA, IONOSFERY I RASPROSTRANENIIA RADIOVOLN, KRASNAYA PAKHRA, USSR.

UNCLASSIFIED

APPROVED FOR RELEASE: 09/01/2001 CIA-RDP86-00513R002202020014-8"

"APPROVED FOR RELEASE: 09/01/2001 CIA-RDP86-00513R002202020014-8

Acc. Nr: AP0048371 Abstracting Service: INTERNAT. AEROSPACE ABST 5-70 Ref. Code: 21R0293

A70-24320 # Magnetic effect of the interaction between the magnetosphere and the filamentary inhomogeneity of the solar wind (Magnitnyi effekt vzaimodeistviia magnitosfery s volokonistoi neodnorodnost'iu solnechnogo vetra). N. V. Mikerin and K. G. Ivanov. *Kosmicheskie issledovaniia*, vol. 8, Jan.-Feb. 1970, p. 149-151. 17 refs. In Russian.

Investigation of magnetic disturbances caused by the interaction between the magnetosphere and the incident filamentary solar-wind inhomogeneity observed by Pioneer 6 on Jan. 20, 1966. It is assumed that the inhomogeneity consists of a region of relatively cold and dense plasma separated by two tangential discontinuities from the hotter and more rarefied solar-wind plasma. It is shown that the direct interaction between the inhomogeneity and the magnetosphere is accompanied by the first phase (onset to maximum) of a bay disturbance; the recovery phase observed after the passage of the inhomogeneity can be regarded as a transient process of system relaxation to an undisturbed state. T.M.

40 12

1/1

REEL/FRAME
19800079

APPROVED FOR RELEASE: 09/01/2001 CIA-RDP86-00513R002202020014-8"

"APPROVED FOR RELEASE: 09/01/2001 CIA-RDP86-00513R002202020014-8

UDC 62-503.53-526-522.6

USSR

LUGOVOY, M. N., and MIKEROV, A. G.

"An Electropneumatic Tracking System"

USSR Author's Certificate No 324415, filed 4 Jan 70, published 29 Feb 72 (from RZH-Avtomatika, Telemekhanika i Vychislitel'naya Tekhnika, No 9, Sep 72, Abstract No 9A188 P)

Translation: The proposed electropneumatic (electrohydraulic) tracking system is designed for controlling various objects like radar antennas in accordance with signals from low-power electric pickups and can be used in electropneumatic and electrohydraulic automatic control systems. There are electropneumatic tracking systems in which a slide valve is moved or a jet tube is rotated by a solenoid or electromagnetic rotator. In view of the high sensitivity of electromagnetic controllers to contamination and to climatic and mechanical effects, systems have recently appeared in which an electric motor is used for driving a pneumatic or hydraulic converter. The electric motor is an integrating link and thus has first-order astaticism. This reduces stability and requires complicated devices and circuits to ensure stability, such as three tachogenerators. As a feature which sets the proposed electropneumatic system apart from conventional

1/2

APPROVED FOR RELEASE: 09/01/2001 CIA-RDP86-00513R002202020014-8"

"APPROVED FOR RELEASE: 09/01/2001 CIA-RDP86-00513R002202020014-8

USSR

LUGOVOY, M. N., and MIKEROV, A. G., USSR Author's Certificate No 324415, filed 4 Jan 70, published 29 Feb 72 (from RZh-Avtomatika, Telemekhanika i Vychislitel'naya Tekhnika, No 9, Sep 72, Abstract No 9A188 P)

units, the dynamic characteristics of the system are improved by adding a pneumatic device whose inputs are connected to the working cavities of a power cylinder and to the shaft of an electric motor.

2/2

APPROVED FOR RELEASE: 09/01/2001 CIA-RDP86-00513R002202020014-8"

"APPROVED FOR RELEASE: 09/01/2001 CIA-RDP86-00513R002202020014-8

UDC: 621.315.592

USSR

BATAVIN, V. V., MIKHAELYAN, V. M., and POPOVA, G. V.

"Nature of 1.26-1.30 ev Radiation Bands in the Photoluminescence Spectra of Gallium Arsenide With Copper Impurities"

Leningrad, Fizika i tekhnika poluprovodnikov, No 10, 1972, pp 1874-1878

Abstract: A number of earlier works have shown that in the luminescence spectra of undoped n-type GaAs in the presence of copper, radiation peaks with energies of 1.26-1.30 ev are observed. The authors of the present paper find that the nature of the recombination center corresponding to this energy band has been inadequately studied, and in this paper obtain additional information regarding the characteristics of the band, thus shedding additional light on the generation and nature of the recombination center. The experiments described were performed on n-type GaAs specimens obtained by gas-transport epitaxia in a broad range of copper concentrations and donor impurities. The acceptor concentrations and the mobility in each specimen were also measured, the latter by the van der Pau method in the 50-300° K interval. The photoluminescence spectra were obtained in the range of 4-300° K using the IIR-1 monochromator

1/2

APPROVED FOR RELEASE: 09/01/2001 CIA-RDP86-00513R002202020014-8"

"APPROVED FOR RELEASE: 09/01/2001 CIA-RDP86-00513R002202020014-8

USSR

UDC: 621.315.592

BATAVIN, V. V., et al, Fizika i tekhnika poluprovodnikov, No 10, 1972, pp 1874-1878

with a glass prism and the LG-75 laser as the excitation source; the receiver device for the radiation was the FEU-28.

2/2

APPROVED FOR RELEASE: 09/01/2001 CIA-RDP86-00513R002202020014-8"

"APPROVED FOR RELEASE: 09/01/2001 CIA-RDP86-00513R002202020014-8

(5)

Sp: JPRS 59,274
14 Jun 73

GROWTH OF EPITAXIAL SILICON FILMS WITH THE APPLICATION OF HYDROGEN OF HIGH PURITY AND THE STUDY OF THEIR PROPERTIES

[Article by V. E. Tashkudinov, A. S. Lyutovich, V. M. Mikhaelyan, and Ye. I. Morkovkin, Novosibirsk, Protsessy Rosta i Struktura Monokristallov i Poluprovodnikov -- Trudy Simpoziuma, Russian, Part 2, 1969, pp 51-61]

The most prospective and controllable method of growing epitaxial films of silicon is the reduction of its tetrachloride in the region of the heated surface of the monocrystalline substrate of silicon in a hydrogen current. Although this process is the subject of many papers [1-3], the effect of oxygen on the electrophysical properties and the growth kinetics of epitaxial silicon films have been studied inadequately [5].

We have performed comparative experiments to obtain the epitaxial film of high purity (total admixture content $1 \cdot 10^{-7}$ percent by volume) containing a controllable microamount of water vapor in the hydrogen. In Figure 21 we have the schematic of the experimental ten-position device together with the system for batched introduction of water vapor into the hydrogen.

The epitaxial films were obtained on substrate of various types which were placed on the silicon baseheated by high frequency currents. The process was realized in a vertical quartz reactor, and the quantity of hydrogen and chloride was regulated within the desired limits. The optimal growth temperature was 1200-1250°C. The silicon chloride had a total impurity content of no more than 10^{-6} percent.

In order to investigate the effect of the oxygen on the growth process, a special saturation system was used (Figure 23).

The hydrogen saturated with water vapor came into the reaction area after the temperature of the substrate reached 1250°C. The substrates were subjected to the effect of the wet hydrogen in practice together with the beginning of deposition. This permitted the pickling effect of the water vapor on the substrate to be avoided [5] and unique data to be obtained on the effect of the water vapor and the oxygen (at a growth temperature of 1250°C, dissociation of the water with the formation of free O_2 takes place). The deposition was carried out with a flow rate of approximately 4 liter/min with a molefraction of $SiCl_4$ in the H_2 equal to 0.005.

MIKHAELYAN, V. M.

APPROVED FOR RELEASE: 09/01/2001 CIA-RDP86-00513R002202020014-8"

"APPROVED FOR RELEASE: 09/01/2001 CIA-RDP86-00513R002202020014-8

AP0021637

M. Mil

US 0000

PRIMARY SOURCE: FBIS Daily Report, Soviet Union, 3 Feb 70, Vol III, Nr 23, p B 13
USSR

MIKHAIL MIL, HELICOPTER DESIGNER, DEAD AT 60

Moscow TASS International Service in English 1904 GMT 2 Feb 70 L

[Text] Moscow, February 2, TASS--With the death of Mikhail Mil the country lost a prominent scientist and a gifted designer of helicopters, says an obituary signed by Leonid Brezhnev, Aleksey Kosygin, Nikolay Podgornyy, and other Soviet leaders, prominent scientists, and aircraft designers.

Mikhail Mil, 60, died on January 31 after a long illness.

Mil's talent manifested itself already in the 1930's when he worked at the central aerohydrodynamical institute. Helicopters extensively used in the national economy and by the Soviet Armed Forces were created in the design bureau which Mil headed from 1948. These helicopters are bought by many countries.

4

1/2

19621745

APPROVED FOR RELEASE: 09/01/2001 CIA-RDP86-00513R002202020014-8"

"APPROVED FOR RELEASE: 09/01/2001 CIA-RDP86-00513R002202020014-8

AP0021637

Dr. of Technical Sciences Mil was a man of vast knowledge and an analytical mind, the obituary says. He was the author of definitive studies in the field of helicopter design.

As the head of a design bureau Mikhail Mil, a member of the Communist Party, was principled and exacting, he was always attentive and considerate to people.

MK

1/2

19621746

APPROVED FOR RELEASE: 09/01/2001 CIA-RDP86-00513R002202020014-8"

"APPROVED FOR RELEASE: 09/01/2001 CIA-RDP86-00513R002202020014-8

UNCLASSIFIED PROCESSING DATE--16OCT70

1/2 033

TITLE--DISPERSION AND ABSORPTION OF LIQUID WATER IN INFRA RED AND RADIO FREQUENCY REGIONS -U-

AUTHOR-(04)-ZOLOTAREV, V.M., MIKHAILOV, B.A., ALPEROVITCH, L.I., POPOVA, S.I.

COUNTRY OF INFO--USSR

SOURCE--OPT. COMMUN. (NETHERLANDS), VOL. 1, NO. 6., P. 301-2 (JAN. 1970)

DATE PUBLISHED----JAN70

SUBJECT AREAS--PHYSICS

TOPIC TAGS--IR ABSORPTION, ELECTROMAGNETIC WAVE DISPERSION, WATER

CONTROL MARKING--NO RESTRICTIONS

DOCUMENT CLASS--UNCLASSIFIED

STEP NO--NE/0000/70/001/006/0301/0302

PROXY REEL/FRAME--1986/0083

CIRC ACCESSION NO--AP0102173

UNCLASSIFIED

APPROVED FOR RELEASE: 09/01/2001 CIA-RDP86-00513R002202020014-8"

"APPROVED FOR RELEASE: 09/01/2001 CIA-RDP86-00513R002202020014-8

UNCLASSIFIED PROCESSING DATE--16OCT70

2/2 033

CIRC ACCESSION NO--AP0102173

ABSTRACT/EXTRACT--(U) GP-0- ABSTRACT. VALUES OF THE OPTICAL CONSTANTS, N AND L (N EQUALS N-IK), OF LIQUID WATER AT 25DEGREESC OVER THE RANGE OF 1-1 TIMES 10 PRIME6 MU, OBTAINED UNDER OPTIMUM SELECTION OF EXPERIMENTAL METHODS ARE TABULATED. KRAMERS KRONIG'S RELATIONSHIPS (KK) WERE USED.

FACILITY: STATE UNIV. V.I. LENIN OF TADJIKISTAN, DIOUCHAMBE, USSR.

UNCLASSIFIED

APPROVED FOR RELEASE: 09/01/2001 CIA-RDP86-00513R002202020014-8"

"APPROVED FOR RELEASE: 09/01/2001 CIA-RDP86-00513R002202020014-8

UNCLASSIFIED PROCESSING DATE--23OCT70

1/2 026

TITLE--EFFECT OF SOME STRUCTURAL FACTORS ON PHOTOCHEMICAL REACTIONS OF LEUCOCYANIDES OF TRIARYLMETHANE DYES -U-

AUTHOR-(03)-RTISHCHEV, N.I., MIKHALCHENKO, G.A., GINZBURG, O.F.

M

COUNTRY OF INFO--USSR

SOURCE--ZH. ORG. KHIM. 1970, 6(3), 582-6

DATE PUBLISHED--------70

SUBJECT AREAS--CHEMISTRY, PHYSICS

TOPIC TAGS--PHOTOCHEMISTRY, CYANIDE, METHANE, DYE, PHOTOLYSIS, LUMINESCENCE, PHOTOEFFECT, ARYL RADICAL

CONTROL MARKING--NO RESTRICTIONS

DOCUMENT CLASS--UNCLASSIFIED

STEP NO--UR/0366/70/006/003/0582/0586

PROXY REEL/FRAME--1995/1465

CIRC ACCESSION NO--AP0116902

UNCLASSIFIED

APPROVED FOR RELEASE: 09/01/2001 CIA-RDP86-00513R002202020014-8"

"APPROVED FOR RELEASE: 09/01/2001 CIA-RDP86-00513R002202020014-8

UNCLASSIFIED PROCESSING DATE--23OCT70

2/2 026

CIRC ACCESSION NO--AP0116902

ABSTRACT/EXTRACT--(U) GP-0- ABSTRACT. UV IRRADN. OF (RHO,NE SUB2 NC SUB6 H SUB4) SUB2 C(CN)R (I) IR IS RHO,ET SUB2 NC SUB6 H SUB4 C SUB6 H SUB4,RHO, RHO,MEOC SUB6 H SUB4 C SUB6 H SUB4,RHO, RHO,PHC SUB6 H SUB4, RHO,ME SUB2 NC SUB6 H SUB4 CH:CH, ET SUB2 NC SUB6 H SUB4 CH:CH) RHO,(3,4,O SUB2 N(ME SUB2 N), C SUB6 H SUB3) SUB2 NC SUB6 H SUB4 CH:CH) CAUSES PHOTOLYSIS AND LUMINESCENCE. THE PHOTOLYSIS OBEYS 1ST ORDER KINETICS. THE QUANTUM YIELDS OF PHOTODISSOCN. ARE VERY LOW. THE PROBABILITY OF THE PHOTODISSOCN. REMAINS APPROX. CONST. THROUGHOUT THE UV WAVELENGTH RANGE. FACILITY: LENINGRAD, TEKHNOL. INST. IM. LENSOVETA, LENINGRAD, USSR.

UNCLASSIFIED

APPROVED FOR RELEASE: 09/01/2001 CIA-RDP86-00513R002202020014-8"

"APPROVED FOR RELEASE: 09/01/2001 CIA-RDP86-00513R002202020014-8

USSR UDC 541.15+539.219

KLIMENTOV, A. S., and MIKHAL'CHENKO, G. A.

"Free Radicals in the Sodium Salt Matrix of Trimetaphosphimic Acid"

Leningrad, Zhurnal Obshchey Khimii, Vol XLIII (CV), No 1 1973, pp 208-209

Abstract: A study was made of the radical products obtained under ^{60}Co γ-radiation in polycrystals of the sodium salt of trimetaphosphimic acid of $77^{\circ}K$ and a pressure of 10^{-2} mm. The atomic hydrogen doublet (I) with splitting of about 500e and, probably, the radical (II) with a complex multiplet structure were detected in the salt matrix.

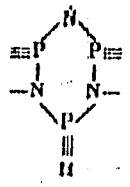

In the irradiated salt samples at 77° K, the number of radicals (I) does not change for hundreds of hours, and on annealing it is detected to a temperature of $\sim 270^{\circ}$ K. The superthin structure of the electron paramagnetic

APPROVED FOR RELEASE: 09/01/2001 CIA-RDP86-00513R002202020014-8"

"APPROVED FOR RELEASE: 09/01/2001 CIA-RDP86-00513R002202020014-8

USSR

KLIMENTOV, A. S., MIKHAL'CHENKO, G. A., Zhurnal Obshchey Khimii, Vol XLIII (CV), No 1, 1973, pp 208-109

resonance spectrum of the radical (II) does not change in practice on heating the irradiated salt from 77 to 465° K.

With a dosage of γ-radiation equal to 10^6 rad absorbed by the sample at 77° K, the radiation-chemical yield of the radicals (I) was 0.4±0.2; the radicals (II), 1.8±0.6 (radical/100 electron volts.

A decrease in the (II) radical content in the 250-300° K temperature range was discovered caused probably by the reaction by the scheme

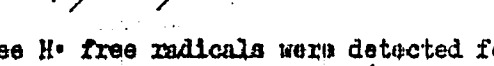

In these experiments, free H· free radicals were detected for the first time in the long-lived state at such high temperatures (to ~ 250° K).

2/2

APPROVED FOR RELEASE: 09/01/2001 CIA-RDP86-00513R002202020014-8"

"APPROVED FOR RELEASE: 09/01/2001 CIA-RDP86-00513R002202020014-8

USSR

Microelectronics UDC 621.59:621.315

TKACHUK, B.V., LAURS, YE.P., MIKHAL'CHENKO, V.I., PEROVA, L.V.

"Thin Polysilicone Films--New Insulating Material For Cyrogenic Electronics"

Dielektriki. Mezhved. nauch. sb. (Dielectrics. Interdepartmental Scientific Collection), 1972, Issue 2, pp 65-68 (from RZh:Elektronika i yeye primeneniye, No 8, August 1972, Abstract No 8A70)

Translation: Polysilicone films with a volume resistivity of 4 . (10^{14}-10^{15}) ohm. cm, a breakdown strength of 2 . 10^6 V/cm, a dielectric constant of 2.7--4.5, and a loss angle of (2.5 - 4.5) . 10^{-3} are prepared by polymerization of organo-silicon compounds in a glow-discharge plasma. The effects were studied of the conditions of preparation and the changes of temperature from room temperature to 4.2° K on the dielectric properties of polysilicone films. Conclusions are drawn concerning their suitableness for use as insulating layers and protective coatings during production of large integrated circuit. 2 ill, 7 ref. Summary

1/1

APPROVED FOR RELEASE: 09/01/2001 CIA-RDP86-00513R002202020014-8"

"APPROVED FOR RELEASE: 09/01/2001 CIA-RDP86-00513R002202020014-8

UNCLASSIFIED PROCESSING DATE--30OCT70

1/2 035

TITLE--MECHANISM OF HEAT TRANSFER IN LAMINAR VACUUM INSULATIONS -U-

AUTHOR-(03)-MIKHALCHENKO, R.S., GETMANETS, V.F., SUKHAREVSKIY, B.YA.

COUNTRY OF INFO--USSR

SOURCE--INZHENERNO-FIZICHESKII ZHURNAL, VOL. 18, MAR, 1970, P. 481-486

DATE PUBLISHED--------70

SUBJECT AREAS--PHYSICS

TOPIC TAGS--TEMPERATURE GRADIENT, HEAT TRANSFER RATE, THERMAL CONDUCTIVITY, METAL FOIL, VACUUM CHAMBER, THERMAL INSULATION

CONTROL MARKING--NO RESTRICTIONS

DOCUMENT CLASS--UNCLASSIFIED

PROXY REEL/FRAME--1996/1439 STEP NO--UR/0170/70/018/000/0481/0486

CIRC ACCESSION NO--AP0118428

UNCLASSIFIED

APPROVED FOR RELEASE: 09/01/2001 CIA-RDP86-00513R002202020014-8"

"APPROVED FOR RELEASE: 09/01/2001 CIA-RDP86-00513R002202020014-8

UNCLASSIFIED PROCESSING DATE--30OCT70

2/2 035

CIRC ACCESSION NO--AP0118428

ABSTRACT/EXTRACT--(U) GP-0- ABSTRACT. ANALYSIS OF THE FACTORS RESPONSIBLE FOR THE POINT OF INFLECTION OBSERVED ON THE EXPERIMENTAL TEMPERATURE CURVES OF ALTERNATING FOIL AND VACUUM INSULATIONS. IT IS SHOWN THAT THE POINT OF INFLECTION IS CAUSED BY NONEQUILIBRIUM RESIDUAL GAS PRESSURE IN THE LAYERS IN COMBINATION WITH THE SUBSTANTIAL CONTRIBUTION OF THE HEAT CONDUCTIVITY OF THE GASES TO THE TOTAL HEAT TRANSFER. FACILITY: AKADEMIIA NAUK UKRAINSKOI SSR, FIZIKO-TEKHNICHESKII INSTITUT NIZKIKH TEMPERATUR, KHARKOV, UKRAINIAN SSR.

UNCLASSIFIED

APPROVED FOR RELEASE: 09/01/2001 CIA-RDP86-00513R002202020014-8"

"APPROVED FOR RELEASE: 09/01/2001 CIA-RDP86-00513R002202020014-8

USSR UDC: 621.396.69:621.319.4

MIKHAL'CHENKO, V. G.

"Soldering Feed-Through Insulators into Capacitor Cans"

Elektron. tekhnika. Nauchno-tekhn. sb. Tekhnol. i organiz. proiz-va (Electronic Technology. Scientific and Technical Collection. Technology and Organization of Production), 1970, vyp. 4 (36), pp 50-53 (from RZh-Radiotekhnika, No 12, Dec 70, Abstract No 12V366)

Translation: The author discusses modern methods of soldering feed-through insulators in the steel housings of paper and metallized paper capacitors. A simple economic thermocontact method of soldering is proposed which is convenient for automation. Basic characteristics are given as well as the results of laboratory and production studies of the process and the unit for implementation. Resumé.

1/1

APPROVED FOR RELEASE: 09/01/2001 CIA-RDP86-00513R002202020014-8"

"APPROVED FOR RELEASE: 09/01/2001 CIA-RDP86-00513R002202020014-8

UNCLASSIFIED PROCESSING DATE--30OCT70

1/2 013

TITLE--KINETICS AND MECHANISM OF CATALYTIC CONVERSIONS OF ACETYLENE. VI. HYDRATION AND HYDROCHLORINATION OF ACETYLENE IN SOLUTIONS OF CUPROUS

AUTHOR-(05)-SHESTAKOV, G.K., YERMAKOVA, A., MIKHALCHENKO, V.G., TEMKIN, O.N., FLID, R.M.

COUNTRY OF INFO--USSR

SOURCE--ZH. FIZ. KHIM. 1970, 44(2), 406-11

DATE PUBLISHED--------70

SUBJECT AREAS--CHEMISTRY

TOPIC TAGS--CHEMICAL REACTION MECHANISM, CHLORINATION, HYDRATION, ACETYLENE, COPPER CHLORIDE, CATALYSIS, REACTION KINETICS

CONTROL MARKING--NO RESTRICTIONS

DOCUMENT CLASS--UNCLASSIFIED

PROXY REEL/FRAME--2000/0892 STEP NO--UR/0076/70/044/002/0406/0411

CIRC ACCESSION NO--AP0124555

UNCLASSIFIED

APPROVED FOR RELEASE: 09/01/2001 CIA-RDP86-00513R002202020014-8"

"APPROVED FOR RELEASE: 09/01/2001 CIA-RDP86-00513R002202020014-8

UNCLASSIFIED PROCESSING DATE--30OCT70

2/2 013

CIRC ACCESSION NO--AP0124555

ABSTRACT/EXTRACT--(U) GP-0- ABSTRACT. THE KINETICS OF HYDROCHLORINATION AND HYDRATION OF C SUB2 H SUB2 WERE MEASURED IN CUCLNH SUB4 CL.HCL.H SUB2 O SOLNS. AT 80DEGREES IN A FLOWING GRADIENT FREE REACTOR. THE RATE OF HYDROCHLORINATION W PRIMEX EQUALS 0.573 TIMES 10 PRIME NEGATIVE6 A SUBCUPOSITIVE PRIME1.48 A SUBCLNEGATIVE PRIME2.7P SUBC2H2H SUB0 A SUBH2O AND THE RATE OF HYDRATION W PRIMEA EQUALS 3.9 3.19 TIMES 10 PRIME NEGATIVE6 A SUBCLNEGATIVE PRIME1.44 P SUBC2H2 H SUB0 A SUBH2O)-(1 PLUS 2.6 H SUB0 A SUBH2O). THE FRACTIONAL VALUES OF THE EXPONENTS AND AN ANAL. OF THE PROPOSED REACTION MECHANISM INDICATE THE PRATICIPATION OF CUCL PRIME2 NEGATIVE, CUCL SUB3 PRIME2NEGATIVE, AND CU SUB2 CL SUB3 PRIME NEGATIVE. FACILITY: MOSK. INST. TONKOI KHIM. TEKHNOL. IM. LOMONOSOVA, MOSCOW, USSR.

UNCLASSIFIED

APPROVED FOR RELEASE: 09/01/2001 CIA-RDP86-00513R002202020014-8"

"APPROVED FOR RELEASE: 09/01/2001 CIA-RDP86-00513R002202020014-8

M

UDC 553.85:548.55

USSR

UTKIN, N. N., URSULYAK, D. N., MIKHAL'CHENKOV, A. G., and ZUYEV, V. A.

"Innomogeneity of Composition of Single Crystals of Calcium-Vanadium-Bismuth Ferrogarnet"

Moscow, Neorganicheskiye Materialy, Vol 6, No 1, Jan 70, pp 104-107

Abstract: It was demonstrated earlier that when growing single crystals of calcium-vanadium-bismuth ferrogarnet by the method of static spontaneous crystallization from solution in a melt of lead oxide, the cooling rate of the melt V_{cool} has an essential effect on the composition and on the most important parameter -- the ferromagnetic resonance band width $2\Delta H$. On decreasing the cooling rate, the molecular composition of the single crystals $\{Bi_{3-2x}Ca_{2x}\}[Fe_2]$ $(Fe_{3-x}V_x)O_{12}$ growing from charges of the same initial composition ($CaCO_3$--[illegible].9 mole %; Fe_2O_3--35.9 mole %; V_2O_5--5.3 mole %; Bi_2O_3--7.1 mole %, and PbO--18.8 mole %) varies toward an increase in the content of calcium and vanadium which for $V_{cool} \approx 1.5$ deg/hour reaches the limit. The results of these investigations are tabulated. The established nature of the dependence of saturation magnetization $4\pi M_s$ and $2\Delta H$ on the composition of the calcium-vanadium-bismuth ferrogarnet agrees with the earlier results. However, for single crystals of $Bi_{0.3}Ca_{2.7}Fe_{3.65}V_{1.35}O_{12}$ grown at $V_{cool} < 1.5$ deg/hour, a continuing drop in the value of $2\Delta H$

1/2

APPROVED FOR RELEASE: 09/01/2001 CIA-RDP86-00513R002202020014-8"

"APPROVED FOR RELEASE: 09/01/2001 CIA-RDP86-00513R002202020014-8

USSR

UTKIN, N. N., et al, Neorganicheskiye Materialy, Vol 6, No 1, Jan 70, pp 104-107

with a decrease in their crystallization rate is characteristic. This law is also observed for single crystals of constant composition obtained from various initial charges.

In order to discover the causes of the effect of the cooling rate of the melt on the composition of single crystals of calcium-vanadium-bismuth ferrogarnet and, consequently, their properties, some samples were subjected to microradiography using the electron probe microanalyzer JIA-JI. It was discovered that in order to grow single crystals of calcium-vanadium-bismuth ferrogarnet with a homogeneous composition, the crystallization process must be carried out with melt cooling rates of no more than 1.5 deg/hour. This also promotes improved reproducibility of the single crystal composition and improved magnetic and super-high-frequency properties. It is pointed out that the more homogeneous composition arises from the fact that the diffusion processes and convection fluxes insure a favorable ratio of ferrite-forming components in the layer of the melt near the surface of the growing single crystals.

2/2

APPROVED FOR RELEASE: 09/01/2001 CIA-RDP86-00513R002202020014-8"

"APPROVED FOR RELEASE: 09/01/2001 CIA-RDP86-00513R002202020014-8

Acc. Nr: AP0049429

Abstracting Service: CHEMICAL ABST. 5/70

Ref. Code: UR0363

104760a Compositional heterogeneity of calcium-vanadium-bismuth iron garnet single crystals. Ilkin, N. I.; Ursulyak, N. D.; Mikhal'chenkov, A. G.; Zuev, V. A. (USSR). Izv. Akad. Nauk SSSR, Neorg. Mater. 1970, 6(1), 104-7 (Russ.). The reasons for the influence of the cooling rate of the melt on the compn. of Ca-V-Bi Fe garnet single crystals, and consequently, also on their properties, were investigated. To grow these garnet crystals that are homogeneous in compn., the crystn. must be carried out at melt cooling rates not >1.5 degree/hr. This also increases the reproducibility of the compn. of the single crystals and improves the magnetic and ultrahigh-frequency properties.
S. A. Mernol

REEL/FRAME
19801267

APPROVED FOR RELEASE: 09/01/2001 CIA-RDP86-00513R002202020014-8"

"APPROVED FOR RELEASE: 09/01/2001 CIA-RDP86-00513R002202020014-8

1/2 020 UNCLASSIFIED PROCESSING DATE--30OCT7

TITLE--THE INFLUENCE OF SOME FACTORS ON THE MORBIDITY AND COURSE OF MANIC DEPRESSIVE PSYCHOSIS. CLINICO STATISTICAL STUDY -U-

AUTHOR-(02)-MIKHALENKO, I.N., NULLER, YU.L.

M

COUNTRY OF INFO--USSR

SOURCE--ZHURNLA NEVROPATOLOGII I PSIKHIATRII IMENI S. S. KORSAKOVA, 1970, VOL 70, NR 6, PP 907-911

DATE PUBLISHED--------70

SUBJECT AREAS--BIOLOGICAL AND MEDICAL SCIENCES, BEHAVIORAL AND SOCIAL SCIENCES

TOPIC TAGS--PSYCHIATRY, PSYCHOSIS, MEDICAL EXAMINATION

CONTROL MARKING--NO RESTRICTIONS

DOCUMENT CLASS--UNCLASSIFIED

PROXY REEL/FRAME--3001/1158 STEP NO--UR/0249/70/070/006/0907/0911

CIRC ACCESSION NO--AP0126761

UNCLASSIFIED

APPROVED FOR RELEASE: 09/01/2001 CIA-RDP86-00513R002202020014-8"

"APPROVED FOR RELEASE: 09/01/2001 CIA-RDP86-00513R002202020014-8

2/2 020 UNCLASSIFIED PROCESSING DATE--30OCT70

CIRC ACCESSION NO--AP0126761

ABSTRACT/EXTRACT--(U) GP-0- ABSTRACT. IN STUDYING 125 PATIENTS WITH MANIC DEPRESSIVE PSYCHOSIS THE AUTHORS TOOK INTO CONSIDERATION THE HEREDITY, PERSONALITY TRAITS, SOMATIC DISEASES, BRAIN INJURIES AND SOME OTHER EXOGENOUS NOXIOUS FACTORS. THE PURPOSE OF THE STUDY WAS TO DETERMINE SOME CORRELATIONS BETWEEN THESE FACTORS AND THEIR INFLUENCE ON THE DEVELOPMENT OF THE PSYCHOSIS. IN PATIENTS WITHOUT HEREDITY LOADING AN ANXIETYSUSPICIOUS PREMORBID CHARACTER AND MALARIA IN THE PAST WAS ENCOUNTERED MUCH MORE FREQUENTLY, THAN IN PATIENTS WITH A PATHOLOGICAL HEREDITY. THE AUTORS ASSUME THAT AN ANXIOUS, SUSPICIOUS CHARACTER AND MALARIA IN THE PAST ARE FACTORS INCREASING THE PROBABILITY OF MANIC DEPRESSIVE PSYCHOSIS. IN PATIENTS WITH HOMOGENOUS HEREDITY PATIENTS WITH MANIC AND DEPRESSIVE PHASES, AS WELL AS WITH A CIRCULAR COURSE OF THE CONTINUAS TYPE WERE MORE FREQUENTLY ENCOUNTERED. THE AUTHORS PRESENT DATA ON THE COURSE OF THE PSYCHOSIS IN SEPARATE GROUPS OF PATIENTS. FACILITY: LENINGRADSKOGO PSIKHONEVROLOGICHESKOGO INSTITUTA IM. BEKHTEREVA.

UNCLASSIFIED

APPROVED FOR RELEASE: 09/01/2001 CIA-RDP86-00513R002202020014-8"

"APPROVED FOR RELEASE: 09/01/2001 CIA-RDP86-00513R002202020014-8

AA0008503 MIKHALENKO S.A. UR 0482

Soviet Inventions Illustrated, Section I Chemical, Derwent, 7

14
5
1
20

227465 TETRAPHENYL DERIVATIVES OF PHTHALOCYANINE VANADYL are novel compounds which can be used in the optical industry. They are produced by reacting phenylphthalic acid or its anhydride, phenylphthalimide or O-chlorophenyl phthalimide with urea and VCl_3 at 240-280°C. The resulting melt is cooled, comminuted, boiled in water and then in diluted HCl. The product is then separated by known methods. The heating is carried out in a solvent, e.g., bromonapthalene, and the product is treated with alcohol. The process is carried out in the presence of a catalytic amount of pyro

1/2

19550612

1

APPROVED FOR RELEASE: 09/01/2001 CIA-RDP86-00513R002202020014-8"

"APPROVED FOR RELEASE: 09/01/2001 CIA-RDP86-00513R002202020014-8

AA0008503

nium vanadate, The product is dissolved in chlorobenzene and purified by chromatography on alumina. In an example, a mixture of 1.8 g. of phenylphthalic anhydride, 1.9 g of urea and 0.32 g. of VCl_3 was boiled for 5 hrs. in bromonaphthalene. After cooling, the reaction mixt. was diluted with methanol, filtered and washed with methanol. The product was dissolved in chlorobenzene and purified by chromatography on Al_2O_3, using chlorobenzene as an eluent. The yield of tetra -4-phenylphthalocyanine vanadyl was 1g. ($C_{56}H_{32}N_8OV$). 29.5.67. as 1159607/23-4, MIKHALENKO, S.A. and LUK'YANETS, E.A. (12.2.69) Bul. 30/25.9.68. Class 22e/12o, Int. Cl. C 09b/C07c.

JLL

19550813

2/2

APPROVED FOR RELEASE: 09/01/2001 CIA-RDP86-00513R002202020014-8"

"APPROVED FOR RELEASE: 09/01/2001 CIA-RDP86-00513R002202020014-8

USSR

M

UDC: 539.125.5.172

KHALUPA, B., MIKHALETS, R., and VAVRA, YA.

"Study of Diffraction of Neutrons at the Institute for Nuclear Studies, Academy of Sciences CSSR"

Moscow, Atomnaya Energiya, Vol 28, No 5, May 70, pp 413-417

Abstract: The laboratory of the INS has performed studies of the diffraction of polarized and nonpolarized neutrons on singlecrystals in various external fields. The crystalline slow neutron spectrometer used for this work is installed in a 4-Mw reactor producing a $4 \cdot 10^{13} n/cm^2 \cdot sec$ thermal neutron flux at the center of the active zone. The equipment is described in some detail. Studies performed include the diffraction of polarized neutrons on ferromagnetic singlecrystals, including measurement of the so-called polarization ratio, and the study of diffraction phenomena during radiation capture of polarized neutrons. The interaction of neutrons with oscillating singlecrystals has also been studied, as well as the diffraction of neutrons on piezoelectrically excited singlecrystals. The diffraction of neutrons on singlecrystals excited by magnetostriction effects has also been studied.

1/1

APPROVED FOR RELEASE: 09/01/2001 CIA-RDP86-00513R002202020014-8"

"APPROVED FOR RELEASE: 09/01/2001 CIA-RDP86-00513R002202020014-8

USSR UDC: 661.143.099

TVERDOKHLEV, I. G., BUTSLOV, M. M., MIKHALEV, A. A., BOZHI-BAYLOVA, G. N.

"Pressing Phosphors as a Method of Making X-Ray Phosphor Screens"

Sb. nauch. tr. VNII lyuminoforov i osobo chist. veshchesty (Collected Scientific Works of the All-Union Scientific Research Institute of Phosphors and Extra Pure Substances), 1971, vyp. 6, pp 71-81 (from RZh-Khimiya, No 15, Aug 72, Abstract No 15L188)

Translation: The paper demonstrates the feasibility of improving the characteristics of x-ray phosphor screens through an increase in the packing density of phosphor grains by the method of pressing followed by high-temperature treatment to restore the intensity of x-ray luminescence (sulfide and rare earth phosphors) or without heating (tungstates, sulfates). Bibliography of five titles.

1/1

APPROVED FOR RELEASE: 09/01/2001 CIA-RDP86-00513R002202020014-8"

"APPROVED FOR RELEASE: 09/01/2001 CIA-RDP86-00513R002202020014-8

USSR UDC 661.143:546.41'78

KRONGAUZ, V. G., MIKHALEV, A. A. and KAPLENOV, I. G.,

"Effect of Purity and Thermal History on the Thermal De-excitation of Calcium Tungstate"

Stavropol' Sb. nauch. tr. VNII lyuminoforov i osobo chist. beshchestv (Collection of Scientific Papers of the All-Union Scientific Research Institute of Phosphors and Ultra-Pure Compounds), No 7, 1972, pp 27-32 (from Referativnyy Zhurnal -- Khimiya, No 7, 1973, Abstract No 7L198)

Translation: The thermal relaxation curves were studied after excitation with UV light and Xrays in samples of $CaWO_4$ obtained from the fractional recrystallation of tungstic acid. The nature of the factors causing differences in the structure of the curves of different samples was determined.

1/1

APPROVED FOR RELEASE: 09/01/2001 CIA-RDP86-00513R002202020014-8"

"APPROVED FOR RELEASE: 09/01/2001 CIA-RDP86-00513R002202020014-8

USSR UDC: 661.143:546.47'221

GUGEL', B. M., MIKHALEV, A. A., TETERYUKOVA, V. G.

"Ways to Improve Phosphors for Black and White Television"

Sb. nauch. tr. VNII lyuminoforov i osobo chist. veshchestv (Collected Scientific Works of the All-Union Scientific Research Institute of Phosphors and Extra Pure Materials), 1971, vyp. 5, pp 67-72 (from RZh-Khimiya, No 7, Apr 72, Abstract No 7L174)

Translation: The "white" mixture of luminescent compositions [illegible] white television screens consists of ZnS:Ag and ZnS·CdS:Ag compositions. If the grain size in the ZnS·CdS:Ag composition is larger than in ZnS:Ag, then there is a tendency toward formation of a two-layer screen during [illegible]. In this case, cascade excitation of luminescence is observed, which leads to nonuniform color of the fluorescence on the screen. In order to eliminate this effect, it is necessary to use a coarser grain in ZnS:Ag composition, or to maintain a greater difference between the temperature of the sedimentation medium and the work area during deposition. Resumé.

1/1

APPROVED FOR RELEASE: 09/01/2001 CIA-RDP86-00513R002202020014-8"

"APPROVED FOR RELEASE: 09/01/2001 CIA-RDP86-00513R002202020014-8

USSR UDC: 661.143:546.47'221

GURVICH, A. M., TOMBAK, M. I., MIKHALEV, A. A., NIKIFOROVA, A. P., BIRMAN, T. A.

"Effect of Deposition Conditions on the Dispersity of Sulfides and Tungstates, and on the Properties of Phosphors Made From Them"

Sb. nauch. tr. VNII lyumineforov i osobo chist. veshchestv (Collected Scientific Works of the All-Union Scientific Research Institute of Phosphors and Extra Pure Materials), 1971, vyp. 5, pp 133-143 (from RZh-Khimiya, No 7, Apr 72, Abstract No 7L177)

Translation: Colloidochemical phenomena play an important part in the process of deposition of ZnS and CdS and calcium tungstate. The grain size of the deposit is determined both by the growth of the microcrystals which form the nuclei of the first colloidal particles, and by the process of coagulation leading to formation of larger aggregates. On the basis of these considerations, the authors explain a number of phenomena observed in the course of [illegible], in particular the formation of large ([illegible] microns) spherical [illegible] with intense and uniform agitation of the $ZnSO_4$ solution [illegible] bubbled, the formation of CdS platelets up to 500-700 microns long in the [illegible]

1/2

APPROVED FOR RELEASE: 09/01/2001 CIA-RDP86-00513R002202020014-8"

"APPROVED FOR RELEASE: 09/01/2001 CIA-RDP86-00513R002202020014-8

USSR

GURVICH, A. M., et al, Sb nauch. tr. VNII lyuminoforov i osobo chist. veshchestv, 1971, vyp 5, pp 133-143

of high initial acidity (3.3-3.6 n.) of the $CdSO_4$ + K_2SO_4 solution, an abrupt increase in the $CaWO_4$ grain size with a reduction in the concentration of $CaCl_2$ to 1%, the absence of a direct relation between the grain sizes of the deposits and the luminescent compositions made from them, etc. The concentration of coprecipitated oxygen-containing impurities can be appreciably reduced and the bulk density of the sulfide can be increased from 1.5-1.6 to 2.5 g/cc by using intense agitation of the solution during zinc sulfide deposition, and also by bubbling H_2S through the rinse water. Bibliography of 16 titles. Resumé.

APPROVED FOR RELEASE: 09/01/2001 CIA-RDP86-00513R002202020014-8"

"APPROVED FOR RELEASE: 09/01/2001 CIA-RDP86-00513R002202020014-8

UDC 661.143

USSR

GURVICH, A. M., MIKHALEV, A. A., TOMBAK, M. I.

"Effect of the Calcining Temperature of the Charge on the Luminescence of Calcium Tungstenate"

Sb. nauch. tr. VNII lyuminoforov i osobo chist. veshchestv (Collection of Scientific Works of the All-Union Scientific Research Institute of Luminophors and Materials of Extreme Purity), 1972, vyp. 7, pp 18-26 (from RZh-Khimiya, No 6 (II), 1973, Abstract No 6L161)

Translation: A sharp difference was discovered in the dependence of the photoluminescence and x-ray luminescence of calcium tungstenate on the calcining temperature of the charge. It is explained by the presence during x-ray excitation of an energy migration stage with respect to the crystal. For this reason, at temperatures <400° the intensity of the x-ray luminescence is low as a result of the high concentration of linear and surface defects; the extinguishing of the x-ray luminescence is caused by the introduction of acid complexes of the group V elements, four of which (As, Sb, Ng, Ta) increase the afterglow of the $CaWO_4$, and the fifth (P) decreases it. Above 800° the recombination afterglow increases sharply in connection with the accumulation of CaO. The bibliography has 19 entries.

1/1

APPROVED FOR RELEASE: 09/01/2001 CIA-RDP86-00513R002202020014-8"

"APPROVED FOR RELEASE: 09/01/2001 CIA-RDP86-00513R002202020014-8

USSR UDC 661.143:546.41'78

KRONRAYZ, V. G., MERZLYAKOV, A. T., KAPLENOV, I. G., GURVICH, A. M., and MIKHAIEV, A. A.

Sb. nauch. tr. VNII lyuminoforov i asobo chist. vechshestv (Collection of Scientific Works From the All-Union Scientific Research Institue of Lumenophors and Principles for Purifying These Compounds), Vyp 7, 1972, pp 72-74 (from Referativnyy Zhurnal -- Khimiya, No 8(II), 1973, Abstract No 8L162 by N. Sh.)

Translation: A preliminary study of the photostimulated luminescence allowed the establishment of the spectral characteristics of a series of basic capture centers in $CaWO_4$ and explained the relationship between the excited absorption bands and peaks of thermal-stimulated luminescence. This permitted the expectation that further study of the photostimulated luminescence in complexes by other methods would give useful information on the nature of the capture centers, the mechanism of the recombination processes, and the role of these factors in the luminescence of this interesting and industrially important class of luminescent compounds of the type $CaWO_4$.

1/1

APPROVED FOR RELEASE: 09/01/2001 CIA-RDP86-00513R002202020014-8"

"APPROVED FOR RELEASE: 09/01/2001 CIA-RDP86-00513R002202020014-8

USSR

UDC: 661.143

MIKHALEV, A. A., MIRONENKO, V. M., MOROZOV, O. A., KOLESNIK, R. I., TETERYUKOVA, V. G., GUGEL', B. M.

"A Procedure for Predicting the Uniformity of the Luminescence Color of a BM-5 Phosphor Coating"

Sb. nauch. tr. VNII lyuminoforov i osobo chist. veshchestv (Collected Scientific Works of the All-Union Scientific Research Institute of Phosphors and Extra Pure Materials), 1971, vyp. 5, pp 125-132 (from RZh-Khimiya, No 7, Apr 72, Abstract No 7L178)

Translation: It was established by physical and chemical methods that in applying batches of crude BM-5 luminescent compositions made by chemical plants, the large fraction settling on the screen frequently contains an excess of the composition with yellow luminescence color. For such batches of BM-5, the luminescence color of the screen is uniformly reddish with a whitish spot in the center. A method is proposed for evaluating the quality of BM-5 luminescent composition with respect to the uniformity of the luminescence color on the screen prepared from the BM-5. The procedure is [illegible] tion into component parts followed by analysis of the [illegible] 1/4

APPROVED FOR RELEASE: 09/01/2001 CIA-RDP86-00513R002202020014-8"

"APPROVED FOR RELEASE: 09/01/2001 CIA-RDP86-00513R002202020014-8

USSR

MIKHALEV, A. A., et al, Sb. nauch. tr. VNII lyuminoforov i osobo chist. veshchestv, 1971, vyp 5, pp 125-132

of the components. A coefficient of uniformity is derived which is equal to half the sum of the ratios of the weights of the B-3[1] and B-3[b] fractions of the composition, which contain particles from 16 to 20 microns, and greater than 20 microns, and the limiting value of the coefficient is established (% or less). Determination of the coefficient is based on analysis of the behavior of more than 20 batches of BM-5 luminescent composition. Bibliography of 5 titles. Resumé.

APPROVED FOR RELEASE: 09/01/2001 CIA-RDP86-00513R002202020014-8"

"APPROVED FOR RELEASE: 09/01/2001 CIA-RDP86-00513R002202020014-8

USSR UDC 621.385.624(088.8)

GINZBURG, V.YE., LEBEDINSKIY, S.V., MIKHALEV, A.K., OVCHAROV, V.T.

"Collector Of Microwave Electron Device"

USSR Author's Certificate No. 271661, filed 30 Dec 67, published 31 May 71 (from RZh--Elektronika i yeye primeneniye, No 12, Dec 1971, Abstract No 12A264P)

Translation: The collector proposed for a Type O microwave electron device contains two isolated electrodes arranged in series with respect to the direction of movement of the electron beam. One of them is supplied at the side adjacent to the other with a nonsymmetrical element, e.g., a projection [vystup] in the form of a half cylinder. With the object of increasing the maximum power and efficiency of the device, the electrodes of the collector are supplied with a means for forced cooling and are arranged one with respect to the other in such a manner that the projecting half cylinder, which is a continuation of the cylindrical bushing [vtulka] attached to the electrode with the lower potential, is surrounded by the internal cylindrical surface of the second electrode equal to it in height, which serves as a precollector.

1/1

APPROVED FOR RELEASE: 09/01/2001 CIA-RDP86-00513R002202020014-8"

"APPROVED FOR RELEASE: 09/01/2001 CIA-RDP86-00513R002202020014-8

UDC 661.12:661.183.12

USSR

DONSKAYA, N. G., MIKHALEV, A. V., and LIBINSON, G. S., All Union Scientific Research Institute of Antibiotics, Moscow

"Study of the Relationship between the Structure and Sorption Characteristics of Ion Exchange Resins Used in Chemical-Pharmaceutical Industry"

Moscow, Khimiko-Farmatsevticheskiy Zhurnal, Vol 5, No 10, Oct 71, pp 43-48

Abstract: A study was carried out on the effect of ion exchange resin characteristics, such as the type of matrix or functional groups on the selectivity of sorption. As far as the functional groups were concerned -- whether they were on the resin or on the experimental material -- the amino substituent groups had no effect whatsoever; when the sulfo groups were replaced by carboxy groups, however, the selectivity was lowered considerably. Absorption of aromatic compounds by an ion exchange resin is mostly due to van der Wall's type of interactions between the sorbent and sorbate. Therefore, the selectivity of aromatic compounds should increase in the order of the following matrix type: aliphatic-phenyl-naphtyl. Experimental data showed that selectivity indeed does increase going from an aliphatic matrix sorbent to a phenyl matrix; the selectivity of phenyl and naphtyl matrices, however, is identical.

1/1

APPROVED FOR RELEASE: 09/01/2001 CIA-RDP86-00513R002202020014-8"

"APPROVED FOR RELEASE: 09/01/2001 CIA-RDP86-00513R002202020014-8

Welding

UDC 669.15 — 194.55:621.791

USSR

SHORSHOROV, M. KH., ANTIPOV, V. I., KUDINOV, YE. D., and MIKHAILEVA, E. I.,
Institute of Metallurgy imeni A. A. Baykov

"Effect of Welding Thermal Cycle on Structure and Phase Composition of Heat-Affected Metal in Maraging Steel"

Moscow, Metallovedeniye i Termicheskaya Obrabotka Metallov, No 11, 1973, pp 62-63

Abstract: A study was made of the effect of the heating and cooling rate during welding on the structure and phase composition of maraging steels of the type 18 Ni—8 Co—3 Mo—Ti and 14 Ni—4 Cr—3 Mo—Ti. It was found that an increase in the grain size during welding is determined by the cooling rate for the metal and how long the metal remains at temperatures above the critical thermal points. Cooling of the metal from $\alpha \rightarrow \gamma$ transformation temperatures at a slow rate contributes to an increase in the amount of remaining austenite and to a certain reduction in the hardness of the heat-affected metal. I. I. PROKHOROVA took part in the work.

1/1

APPROVED FOR RELEASE: 09/01/2001 CIA-RDP86-00513R002202020014-8"

"APPROVED FOR RELEASE: 09/01/2001 CIA-RDP86-00513R002202020014-8

UDC 621.735.33:621.792.02/.0

USSR

Tekhnologiya skleivaniya dataley v samoletostroyenii (Technology of Adhesive Bonding in Aircraft Construction), by I. I. Kapelyushnik, I. [illegible] and B. D. Lydel'man (deceased), Moscow, Mashinostroyeniye, 1972, 224 pp, illus, biblio, 4,500 copies printed

Describes technology of adhesive bonding of metals and nonmetallic structural materials to guarantee high strength, long service life, hermeticity, and good corrosion resistance of the joined surfaces. Gives the physical-mechanical and technological characteristics of adhesives, describes types of adhesive compounds used in aircraft construction. Emphasis is put on the choice of the most rational technological processes of adhesive bonding, production equipment, preparation and testing of adhesives, quality control and operational safety during work with adhesives.

The book is intended for a wide circle of engineering and technical personnel and may also be used as a practical manual for those responsible for technological processes involving the use of adhesives.

1/2

APPROVED FOR RELEASE: 09/01/2001 CIA-RDP86-00513R002202020014-8"

"APPROVED FOR RELEASE: 09/01/2001 CIA-RDP86-00513R002202020014-8

USSR

Tekhnologiya skleivaniya detaley v samoletostroyenii (Technology of Adhesive Bonding in Aircraft Construction), by I. I. Kapelyushnik et al, Moscow 1972.

Contents

Foreword	page 3
Introduction	4
Chapter I. General Information On Adhesive Bonding of Materials	7
Chapter II. Main Aviation Adhesives and Their Characteristics	11
Chapter III. Main Materials and Types of Adhesive Compounds	39
Chapter IV. Inspection, Testing and Preparation of Adhesives	46
Chapter V. Technological Methods of Adhesive Bonding	70
Chapter VI. Technology of Adhesive Bonding of Parts and Equipment	104
Chapter VII. Preparation of Sandwich Structures	161
Chapter VIII. Quality Control of Adhesive-Bonded Parts	205
Chapter IX. Safety Procedures in Work With Adhesives	219
Bibliography	222

2/2

APPROVED FOR RELEASE: 09/01/2001 CIA-RDP86-00513R002202020014-8"

"APPROVED FOR RELEASE: 09/01/2001 CIA-RDP86-00513R002202020014-8

Oscillators and Modulators

UDC 621.372.853.3.09

USSR

MIKHALEV, L.A.

"On A Theory Of A Coaxial Gas-Discharge Oscillator Loaded On A Helix Line"

Radiotekhnika i elektronika, Vol XVII, No 6, June 1972, pp 1258-1255

Abstract: On the basis of the results obtained in a previous paper by the author [cf. Radiotekhnika i elektronika, 1971, 16, 8, 1486], a study is made of the characteristic propagation of electromagnetic waves in a coaxial helical line partially filled with gas-discharge plasma, in an application to gas-discharge noise generators. The magnitude is determined of the attenuation factor of the waves in such a system as a function of the frequency, the parameters of the gas-discharge plasma, and the oscillating section. The theoretical and experimental data agree within the limits of precision of solution of the dispersion equation. The proposed method of calculation can be used during planning of gas-discharge noise generators and the choice of their optimum operating conditions. In addition, the results obtained can be used for diagnosis of laboratory gas-discharge plasma provided that, for example, measurement of the attenuation factor at two frequencies makes it possible to determine the electron density and the effective frequency of the elastic impacts of electrons with atoms. 3 fig. 5 ref. Received by editors, 12 April 1971.

1/1

APPROVED FOR RELEASE: 09/01/2001 CIA-RDP86-00513R002202020014-8"

"APPROVED FOR RELEASE: 09/01/2001 CIA-RDP86-00513R002202020014-8

UDC: 621.372.542(088.8)

USSR

SDAVSKIY, G. N., MIKHALEV, P. G., Leningrad Polytechnical Institute

"Unit for an Active Third-Order Low-Frequency RC Filter"

USSR Author's Certificate No 266096, filed 12 Mar 68, published 28 Jul 70 (from RZh-Radiotekhnika, No 1, Jan 71, Abstract No 1D64 P)

Translation: This Author's Certificate introduces a unit for an active third-order low-frequency RC filter. The device contains an amplifier and a double-T RC bridge in a feedback circuit. To ensure steep cut-off of the characteristic, improve the stability of its parameters, and reduce overall dimensions, an integrating amplifier is used as the active element with the above-mentioned double-T RC bridge across its input. The bridge has a balance frequency which lies outside the passband of the filter. The feedback circuit from the filter output is connected to the amplifier input through the bridge.

1/1

APPROVED FOR RELEASE: 09/01/2001 CIA-RDP86-00513R002202020014-8"

"APPROVED FOR RELEASE: 09/01/2001 CIA-RDP86-00513R002202020014-8

USSR

MIKHALEV, P. V., Vladivostok Medical Institute

"Amentia and Delirium in Poisonings by the Jellyfish Gonionemus vertens"

Vladivostok, Biologicheskiye i Meditsinskiye Issledovaniya na Dal'nem Vostoka (Biological and Medical Research in the Far East), Vladivostok, 1971, pp 229-233

Abstract: Eighteen persons developed psychosis within a few hours after being stung by the poisonous jellyfish Gonionemus vertens. The psychotic episode, which lasted about 2 hours (in 3 cases) to 2 days or more (in 15), was initiated by amential manifestations that gradually gave way to delirium. The amential state was characterized by complete disorientation in space and time, incoherent speech, confusion, anxiety, chaotic, unmotivated actions, and social inaccessibility. The delirious period featured nightmares, optical and tactical hallucinations, and delusions. Some patients suffered from a deeper clouding of consciousness in the form of delirium mussitans, lack of responsiveness to external stimuli, and compulsive repetition of stereotypic movements. All recovered completely, although a few exhibited transient postintoxication asthenic, asthenic-depressive, and other abnormalities.

1/1

APPROVED FOR RELEASE: 09/01/2001 CIA-RDP86-00513R002202020014-8"

"APPROVED FOR RELEASE: 09/01/2001 CIA-RDP86-00513R002202020014-8

USSR

MIKHALEV, P. V., Vladivostok Medical Institute

"Severe Toxicosis With Deep Clouding of Consciousness Following Stings by the Jellyfish Gonionemus vertens"

Vladivostok, Biologicheskiye i Meditsinskiye Issledovaniya na Dal'nem Vostoke (Biological and Medical Research in the Far East), Vladivostok, 1971, pp 222-228

Abstract: Examination of 600 cases of persons stung by the poisonous jellyfish Gonionemus vertens turned up 12 with mental disturbances. The initial phase of the toxicosis was marked by intermittent psychomotor excitation. This was followed by pronounced autonomic changes (deathlike pallor, cold sweat, dyspnea, thready pulse, and so forth) and a stupor that ended in a sopor or coma lasting 20 minutes to 6 hours. The coma was succeeded by transient amentia (confusion, disconnected, almost inaudible speech, disorientation in time and place, loss of memory). Recovery set in after a period of emotional and hyperesthetic weakness. The severity of the toxicosis is determined by two factors: (a) the amount of toxin received, i.e., whether the victim is stung in more than one place on the body and (b) the victim's premorbid condition, especially if it includes allergies. A typical case history is set forth in considerable detail.

1/1

APPROVED FOR RELEASE: 09/01/2001 CIA-RDP86-00513R002202020014-8"

"APPROVED FOR RELEASE: 09/01/2001 CIA-RDP86-00513R002202020014-8

1/2 011 UNCLASSIFIED PROCESSING DATE--23OCT70

TITLE--REINFORCED CONCRETE SHAFT TIE BEAMS PREPARED FROM HIGH STRENGTH MATERIALS -U-

AUTHOR-(02)-MYURBERG, V.K., MIKHALEV, V.G.

COUNTRY OF INFO--USSR

SOURCE--IZV. VYSSH. UCHEB. ZAVED., GORN. ZH. 1970, 13(2), 33-7

DATE PUBLISHED-------70

SUBJECT AREAS--MATERIALS, EARTH SCIENCES AND OCEANOGRAPHY, MECH., IND., CIVIL AND MARINE ENGR

TOPIC TAGS--REINFORCED CONCRETE, BLAST FURNACE SLAG, MINING ENGINEERING, CONSTRUCTION MATERIAL

CONTROL MARKING--NO RESTRICTIONS

DOCUMENT CLASS--UNCLASSIFIED

PROXY REEL/FRAME--1997/1025 STEP NO--UR/0150/70/013/002/0033/0037

CIRC ACCESSION NO--AT0119892

UNCLASSIFIED

APPROVED FOR RELEASE: 09/01/2001 CIA-RDP86-00513R002202020014-8"

"APPROVED FOR RELEASE: 09/01/2001 CIA-RDP86-00513R002202020014-8

2/2 011 UNCLASSIFIED PROCESSING DATE--23OCT70

CIRC ACCESSION NO--AT0119892

ABSTRACT/EXTRACT--(U) GP-0- ABSTRACT. THE CROSS SECTION OF THE TIE BEAM IS U SHAPED. IN THE LONGITUDINAL RIBS THE REINFORCEMENT WITH PERIODIC PROFILE 5 MM IN DIAM. AND A STRENGTH OF 15,000 KG PER CM PRIME3 IS PLACED. ITS LENGTH VARIED FROM 0.5 TO 1 M, THE CONCRETE VOL. IS 3.3-6.6 L., THE WT. 7.8-15.6 KG, THE METAL CONSUMPTION 0.15-0.3 KG. THE CONCRETE CONSISTED OF GROUND GRANULATED METALLURGICAL BLAST FURNACE SLAG, WATER GLASS, NAOH WITH A SP. GR. OF 1.42-1.45, FINE SAND WITH A SIZE MODULE OF 2.8 CONTG. 3.5PERCENT DUSTLIKE AND CLAYEY PARTICLES, AGGREGATE WITH A SP. GR. OF 2.8 CONTG. 2.8PERCENT OF DUSTLIKE AND CLAYEY PARTICLES. THE OPTIMUM WT. RATIO OF SAND AND AGGREGATE WAS 1:1.83, FOR VOID FRACTION OF 0.26. THE OPTIMUM GLASS:SLAG RATIO WAS 0.325-0.365. THE COMPN. OF THE CONCRETE WAS GROUND GRANULATED SLAG 500-600, WATER GLASS 140-5, NAOH 18.5-20, SAND 550-650, AGGREGATE 1100-1300, WATER 40-5 KG. THE TIE BEAMS WERE MANUFD. IN INDIVIDUAL STEEL MOLDS. FOR SPANS OF 700-950 MM, FAILURE OCCURRED IN THE STRETCHED ZONE OWING TO BREAK IN THE REINFORCEMENT. TIE BEAMS WITH A SPAN OF 450 MM ARE DESTROYED ON THE SUPPORTS OWING TO THE APPEARANCE OF CRACKS. THE CRIT. TRANSVERSAL FORCE OF CONCRETE OF TYPE 500 IS 1.8 TONS. THE TIE BEAMS ARE RECOMMENDED FOR HEAVY DUTY UNDER MINING CONDITIONS. FACILITY: KARAGAND. POLITEKH. INST., KARAGANDA, USSR.

UNCLASSIFIED

APPROVED FOR RELEASE: 09/01/2001 CIA-RDP86-00513R002202020014-8"

"APPROVED FOR RELEASE: 09/01/2001 CIA-RDP86-00513R002202020014-8

USSR UDC: 8.74

YAMPOL'SKIY, S. A., MIKUSHOV, A. V., MIKHALEV, V. I.

"Realization of an Algorithm for Comparative Evaluation of the Activity of Institutions of Higher Education in Organizing Student Research Work"

Tomsk, Kibernetika i vuz--sbornik (Cybernetics and Higher Education--collection of works), vyp. 5, 1972, pp 133-145 (from RZh-Kibernetika, No 5, May 73, abstract No 5V812 by the authors)

Translation: The paper describes a procedure and program for processing data on the "MIR-1" computer on the results of competition exams of institutions of higher education with respect to the organization of student research work.

1/1

APPROVED FOR RELEASE: 09/01/2001 CIA-RDP86-00513R002202020014-8"

"APPROVED FOR RELEASE: 09/01/2001 CIA-RDP86-00513R002202020014-8

USSR UDC 621.396.669.8

MIKHALEV, V. V., SIMAKOV, B. I., TYUN'KOV, V. S.

"Resistors for Radio Interference Suppression"

Elektron. tekhnika. Nauchno-tekhn. sb. Radiokomponenty (Electronic Engineering. Scientific and Technical Collection. Radio Components), 1970, vyp. 3, pp 31-36 (from RZh-Radiotekhnika, No 4, Apr 71, Abstract No 4A248)

Translation: A brief study of the basic functions and operating conditions of resistors used to suppress radio interference from motor vehicle ignition systems is presented. The designs of the resistor in the spark plug and distributor networks are investigated. Inclusion of resistors in the ignition system reduces the radio interference level significantly and improves the quality of radio and television reception. Application of a microconductor in glass insulation as the resistor insures a high operating voltage of the resistor with minimum size.

1/1

APPROVED FOR RELEASE: 09/01/2001 CIA-RDP86-00513R002202020014-8"

"APPROVED FOR RELEASE: 09/01/2001 CIA-RDP86-00513R002202020014-8

USSR

UDC 621.039.524:531.781

BORTKEVICH, V. I., MIKHALEV, Yu. K., PRIGOROVSKIY, N. I., and KHURSHUDOV, G. Kh.

"Full Scale Stress Investigations in Reactor Vessels of Atomic Electric Power Stations"

V Sb. "Issled. Temperatur. Napryazheniy" [In the Collection "Investigations of Thermal Stresses"], Moscow, "Nauka," 1972, pp 176-182 (from Referativnyy Zhurnal, No 10, Oct 72. 50. Yadernyye Reaktory. Single Issue. Abstract No 10.50.67)

Translation: Results are presented of tensometric investigations of nuclear reactor vessels of powerful atomic electric power plants. The investigations were carried out during the initial period of operation, they made possible an evaluation of developing stresses and temperatures depending on operating conditions. Characteristics of the state of stress and of the temperature change in the vessel in transient and steady state operating conditions are demonstrated. Recommendations based on results of full scale tensometering are given for the selection of operating conditions. Three illustrations, two tables.

1/1

APPROVED FOR RELEASE: 09/01/2001 CIA-RDP86-00513R002202020014-8"

"APPROVED FOR RELEASE: 09/01/2001 CIA-RDP86-00513R002202020014-8

1/2 009 UNCLASSIFIED PROCESSING DATE--13NOV70

TITLE--2,2,3IS ALKYLTHIO,1,TRIMETHYLSILYOXYPROPANES -U-

AUTHOR-(03)-VASILYEV, N.P., MIKHALEVA, A.I., ATAVIN, A.S.

COUNTRY OF INFO--USSR

SOURCE--ZH. OBSHCH. KHIM. 1970, 40(4), 820-1

DATE PUBLISHED--------70

SUBJECT AREAS--CHEMISTRY

TOPIC TAGS--ORGANOSILICON COMPOUND, ORGANIC SULFUR COMPOUND, PROPANE, ORGANIC SYNTHESIS

CONTROL MARKING--NO RESTRICTIONS

DOCUMENT CLASS--UNCLASSIFIED

PROXY REEL/FRAME--3092/1129 STEP NO--UR/0079/70/040/004/0820/0821

CIRC ACCESSION NO--AP0128515

APPROVED FOR RELEASE: 09/01/2001 CIA-RDP86-00513R002202020014-8"

"APPROVED FOR RELEASE: 09/01/2001 CIA-RDP86-00513R002202020014-8

2/2 009 UNCLASSIFIED PROCESSING DATE--13NOV70

CIRC ACCESSION NO--AP0128556

ABSTRACT/EXTRACT--(U) GP-0- ABSTRACT. ADDING 11 G ME SUB3 SICL TO 21.3 G MEC(SPR) SUB2 CH SUB2 OH IN ET SUB2 O AND 20 ML ET SUB3 N GAVE AFTER 2 HR 75PERCENT MEC(SPR) SUB2 CH SUB2 OSIME SUB3, B SUB1 94-5DEGREES, D PRIMEZO 0.9716, N PRIMEZO SUBD 1.4950; SIMILARLY WAS PREPD. THE ESSU) SUB2 ANALOG (I), 75PERCENT, B SUB1 137080EGREES, 0.9544, 1.4672; AND 76PERCENT (SCHSUB2 CHME SUB2) SUB2 ANALOG, B SUB2 126-70EGREES, 0.9413, 1.4732. HEATING I WITH 5PERCENT HCL 3 HR GAVE 85PERCENT MEC(SSU) SUB2 CH SUB2 OH, B SUB2 126DEGREES. FACILITY: IRKUTSK. INST. ORG. KHIM., IRKUTSK, USSR.

UNCLASSIFIED

APPROVED FOR RELEASE: 09/01/2001 CIA-RDP86-00513R002202020014-8"

"APPROVED FOR RELEASE: 09/01/2001 CIA-RDP86-00513R002202020014-8

Acc. Nr AP0041853 Abstracting Service: CHEMICAL ABST. 4/70 Ref. Code UR0366

89688n Rearrangement in the thiolysis of 2-methyl-2-(hydroxymethyl)-1,3-dioxolane. Trofimov, B. A.; Atavin, A. S.; Mikhelova, A. I.; Kalabin, G. A.; Vasilev, N. P. (Irkutsk. Inst. Org. Khim., Irkutsk, USSR). *Zh. Org. Khim.* 1970, 6(1), 190-1 (Russ). The reaction of 2-methyl-2-(hydroxymethyl)-1,3-dioxolane with RSH (R = Pr or iso-Bu) in acid medium gave 5-10% $(RS)_2CMeCH_2OH$ and 80-90% $(RS)_2CHCHMeSR$. The expected "normal" reaction products $(RS)_2CMeCH_2SR$ were not formed. CPJR

REEL/FRAME
19751734

APPROVED FOR RELEASE: 09/01/2001 CIA-RDP86-00513R002202020014-8"

"APPROVED FOR RELEASE: 09/01/2001 CIA-RDP86-00513R002202020014-8

UNCLASSIFIED PROCESSING DATE--09DEC70

1/2 035

TITLE--PROBLEMS OF IMMUNOLOGICAL REACTIVITY IN MENTAL PATIENTS WITH TOXOPLASMOSIS -U-

AUTHOR-(04)-MOTOVKINA, N.S., MIKHALEVA, L.V., KOTKOV, F.I., FRAYND, N.M.

M

COUNTRY OF INFO--USSR

SOURCE--ZHURNAL NEVROPATOLOGII I PSIKHIATRII IMENI S. S. KORSAKOVA, 1970, VOL 70, NR 5, PP 718-721

DATE PUBLISHED--------70

SUBJECT AREAS--BIOLOGICAL AND MEDICAL SCIENCES

TOPIC TAGS--IMMUNOLOGY, MENTAL DISORDER, ANTIBODY, TEST, PSYCHOSIS, ENCEPHALITIS, CENTRAL NERVOUS SYSTEM, PARASITIC DISEASE, TOXOPLASMOSIS

CONTROL MARKING--NO RESTRICTIONS

DOCUMENT CLASS--UNCLASSIFIED

PROXY REEL/FRAME--1994/1134 STEP NO--UR/0246/70/070/005/0718/0721

CIRC ACCESSION NO--AP0115153

UNCLASSIFIED

APPROVED FOR RELEASE: 09/01/2001 CIA-RDP86-00513R002202020014-8"

"APPROVED FOR RELEASE: 09/01/2001 CIA-RDP86-00513R002202020014-8

UNCLASSIFIED PROCESSING DATE--09DEC70

2/2 035

CIRC ACCESSION NO--AP0115153

ABSTRACT/EXTRACT--(U) GP-0- ABSTRACT. THE AUTHORS CONVENED A COMPREHENSIVE STUDY OF IMMUNOLOGICAL CHANGES IN THE ORGANISM OF MENTAL PATIENTS WITH TOXOPLASMOSIS. THE STUDIES WERE RELATED MAINLY WITH THE EXISTENCE OF COMPLETE ANTIBODIES, COMPLEMENT FIXATION TESTS, INCOMPLETE ANTIBODIES IN THE INHIBITIVE REACTIONS OF COMPLEMENT FIXATION AND SENSITIZATION BY A TOXOPLASMOTIC ALLERGEN (INTRACUTANEOUS TESTS). 1504 PATIENTS WERE STUDIED. THE HIGHEST PER CENT OF POSITIVE REACTIONS TO TOXOPLASMOSIS WAS SEEN IN OLIGOPHRENIC PATIENTS (73.3PERCENT) AND IN PATIENTS WITH ENCEPHALITIS (67.0PERCENT); THE LOWEST WAS SEEN IN TRAUMATIC PSYCHOSES (26,3PERCENT). THE TOTAL NUMBER (IN ALL DISEASES) WAS 53,5PERCENT. COMPARING THE RESULTS IN GROUPS OF PATIENTS WITH TOXOPLASMOSIS WITHOUT MENTAL DISORDERS AND WITH DIVERSE MENTAL CHANGES IT WAS DISPLAYED THAT INCOMPLETE ANTIBODIES IN THE SECOND GROUP WERE REGISTERED 4 TIMES MORE FREQUENTLY THAN IN THE FIRST. THIS MAY SPEAK OF A MORE PROFOUND AFFECTION OF THE ORGANISM BY INFECTIONS AND AN INVOLVEMENT INTO THE PATHOLOGICAL PROCESS OF THE CNS. THESE CHANGES IN THE REORGANIZATION OF REACTIVITY ARE INTIMATELY CONNECTED WITH THE DURATION OF THE DISEASE. FACILITY: KAFEDRY PSIKHIATRII, KAFEDRA MIKROBIOLOGII VLADIVOSTOK MEDITSINSKOGO INST. AND TOKSOPLAZMOZNAYA LAB. KRAYEVOY SANEPIDSTANTSII.

UNCLASSIFIED

APPROVED FOR RELEASE: 09/01/2001 CIA-RDP86-00513R002202020014-8"

"APPROVED FOR RELEASE: 09/01/2001 CIA-RDP86-00513R002202020014-8

1/2 009 UNCLASSIFIED PROCESSING DATE--20NOV70

TITLE--UREA PHOSPHATES AND THEIR POSSIBLE USE IN ANIMAL HUSBANDRY -U-

AUTHOR-(03)-VOLFKOVICH, S.I., CHEKHOVSKIKH, A.I., NIKHALEVA, T.K.

COUNTRY OF INFO--USSR

SOURCE--KHIM. SEL. KHOZ. 1970, 8(3), 217-18

DATE PUBLISHED--------70

SUBJECT AREAS--AGRICULTURE, BIOLOGICAL AND MEDICAL SCIENCES

TOPIC TAGS--UREA, PHOSPHATE, ANIMAL HUSBANDRY, DIET, COMMERCIAL ANIMAL

CONTROL MARKING--NO RESTRICTIONS

DOCUMENT CLASS--UNCLASSIFIED
PROXY REEL/FRAME--3001/0514 STEP NO--UR/0394/70/008/003/0217/0218

CIRC ACCESSION NO--AP0126262
UNCLASSIFIED

APPROVED FOR RELEASE: 09/01/2001 CIA-RDP86-00513R002202020014-8"

"APPROVED FOR RELEASE: 09/01/2001 CIA-RDP86-00513R002202020014-8

UNCLASSIFIED PROCESSING DATE--20NOV70

2/2 009

CIRC ACCESSION NO--AP0126262

ABSTRACT/EXTRACT--(U) GP-0- ABSTRACT. THE UTILIZATION OF CO(NH SUB2) SUB2.H SUB3 PO SUB4 (I), CO(NH SUB2) SUB2.H SUB4 P SUB2 O SUB7 (II), AND NCO(NF SUB2) SUB2.(HCP SUB3) SUBN (III) IN RUMINANT FEED WAS STUDIED. THE USE OF I, II, AND III IN SHEEP FEEDING TRIALS PRODUCED BETTER RESUTLS THAN UREA. THE HANDLING OF I, II, AND III WAS SIMILAR TO UREA HANDLING, BUT THEIR TENDENCY FOR CAKING IN STORAGE WAS CONSIDERABLY LOWER. THE WATER SOLN. OF I HAD A PH OF 1.5-3.15, A GOOD PROPERTY FOR USE IN THE PRESERVATION OF SILAGE.

UNCLASSIFIED

APPROVED FOR RELEASE: 09/01/2001 CIA-RDP86-00513R002202020014-8"

"APPROVED FOR RELEASE: 09/01/2001 CIA-RDP86-00513R002202020014-8

USSR

ALEKSANDROV, V. I., VORON'KO, YU. K., MIKHALEVICH, V. G., OSIKO, V. V., PROKHOROV, A. M., Academician, TATARINTSEV, V. M., UDOVENCHIK, V. T., and SHIPULO, G. P., Physics Institute imeni P. N. Lebedev, USSR Academy of Sciences, Moscow

"Spectroscopic Properties and Generation of Nd^{3+} in Crystals of ZnO_2 and HfO_2"

Doklady Akademii Nauk SSSR, Vol 199, No 6, 1971, pp 1282-1283

Abstract: The spectroscopic properties of Nd^{3+} are known in various crystals and glasses. Materials such as crystals of $Y_3Al_5O_{12}$ and silicate glasses activated with neodymium have been widely used in lasers. The authors of this article first describe the spectroscopic properties and generation of Nd^{3+} in cubic crystals of ZrO_2 and HfO_2. These materials have a fluorite type crystal lattice in which the Nd^{3+} ions replace the tetravalent ions of zirconium or hafnium. In addition to the Nd^{3+} the crystals contained impurities of CaO or V_2O_3 for the purpose of stabilizing the cubic structure of the ZrO_2 and HfO_2. The authors describe the experiment and give 1 figure and 1 table to illustrate the results. The figure graphically shows the optical spectra of HfO_2-Nd^{3+} crystals, including the spectrum of absorption, the

1/2

APPROVED FOR RELEASE: 09/01/2001 CIA-RDP86-00513R002202020014-8"

"APPROVED FOR RELEASE: 09/01/2001 CIA-RDP86-00513R002202020014-8

USSR

ALEKSANDROV, V. I., et al., Doklady Akademii Nauk SSSR, Vol 199, No 6, 1971, pp 1282-1283

absorption group, and the spectrum of luminescence transition. The table gives two structural types of crystals with their properties. The article contains 1 figure, 1 table, and 9 bibliographic entries.

2/2

APPROVED FOR RELEASE: 09/01/2001 CIA-RDP86-00513R002202020014-8"

"APPROVED FOR RELEASE: 09/01/2001 CIA-RDP86-00513R002202020014-8

USSR UDC: 51:330.115

MIKHALEVICH, V. S., YERMOL'YEV, Yu. M.

"On Some Mathematical Problems in Analysis and Synthesis of Complex Systems"

V sb. Nauch. i prakt. probl. bol'shikh sistem. Sekts. Bol'shiye sistemy. Teoriya, metodol. modelir. (Scientific and Technical Problems of Large Systems--collection of works. Large Systems Section. Theory, Methodology, Modeling), Moscow, "Nauka", 1971, pp 158-163 (from RZh-Kibernetika, No 12, Dec 71, Abstract No 12V861)

Translation: The paper deals with problems of using mathematical methods and models for analyzing and synthesizing complex systems. On the basis of the analysis, recommendations are made on the mathematical solution of many problems of practical importance. Authors' abstract.

1/1

APPROVED FOR RELEASE: 09/01/2001 CIA-RDP86-00513R002202020014-8"

"APPROVED FOR RELEASE: 09/01/2001 CIA-RDP86-00513R002202020014-8

USSR UDC: 51:330.115

MIKHALEVICH, V. S., YERMOL'YEV, Yu. M.

"On Some Mathematical Problems in Analysis and Synthesis of Complex Systems"

V sb. Nauch. i prakt. probl. bol'shikh sistem. Sekts. Bol'shiye sistemy. Teoriya, metodol. modelir. (Scientific and Technical Problems of Large Systems--collection of works. Large Systems Section. Theory, Methodology, Modeling), Moscow, "Nauka", 1971, pp 158-163 (from RZh-Kibernetika, No 12, Dec 71, Abstract No 12V861)

Translation: The paper deals with problems of using mathematical methods and models for analyzing and synthesizing complex systems. On the basis of the analysis, recommendations are made on the mathematical solution of many problems of practical importance. Authors' abstract.

1/1

APPROVED FOR RELEASE: 09/01/2001 CIA-RDP86-00513R002202020014-8"

"APPROVED FOR RELEASE: 09/01/2001 CIA-RDP86-00513R002202020014-8

UDC 621.315.422:537

USSR

MIKHALEVSKIY, A. N.

"A Nonlinear Dielectric in a Nonhomogeneous Electric Field"

Moscow, Radiotekhnika i Elektronika, Vol 16, No 7, Jul 71, p 1242-1249

Abstract: The author considers the nonlinearity of a ferroelectric crystal in a nonhomogeneous electric field, which is expressed by the dynamic capacitance of the corresponding nonlinear capacitor as a function of the voltage across its plates. An iteration method as applied to boundary value problems for a nonlinear medium is developed for finding the electrostatic potential as a function of coordinates and voltage. The author thanks O. G. Vendik for constructive criticism and interest in the work.

1/1

APPROVED FOR RELEASE: 09/01/2001 CIA-RDP86-00513R002202020014-8"

"APPROVED FOR RELEASE: 09/01/2001 CIA-RDP86-00513R002202020014-8

USSR UDC: 621.317.351:621.397

BELEN'KIY, Ya. Ye., MIKHALEVSKIY, V. I., TISHCHENKO, A. G., TSERKOVNYUK, E. A.

"A Device for Automatic Isolation of Television Signal Test Lines and Their Elements"

Moscow, Otkrytiya, izobreteniya, promyshlennyye obraztsy, tovarnyye znaki, No 3, Jan 71, Author's Certificate No 291371, Division H, filed 15 Apr 69, published 6 Jan 71, p 161

Translation: This Author's Certificate introduces a device for automatically isolating the test lines of a television signal and their elements. The device contains a synchroselector, a selector of line and frame pulses, a line frequency pulse oscillator, a half-frame separation circuit, a switch for selecting the location of a line element, a cadence pulse generator and a flip-flop with separate triggering. As a distinguishing feature of the patent, the device is simplified and its operational reliability is improved by connecting two multiphase multivibrators in series through flip-flops with separate triggering between the selector of line and frame pulses and the switch for selecting the location of a line element. A signal from the line frequency pulse oscillator is sent to the inputs of these two multivibrators, and the cadence pulse generator is connected to the third multiphase multivibrator. The outputs of this third multivibrator are connected to coincidence circuits to which signals are sent from the line position selector switch.

1/1

APPROVED FOR RELEASE: 09/01/2001 CIA-RDP86-00513R002202020014-8"

"APPROVED FOR RELEASE: 09/01/2001 CIA-RDP86-00513R002202020014-8

UDC: 621.317.39

USSR

ZHUKOV, V. I., MIKHALEVSKIY, V. I., RYMSHA, V. A.

"A Device for Measuring Group Delay Time"

USSR Author's Certificate No 269015, filed 9 Aug 68, published 10 Aug 70 (from RZh-Radiotekhnika, No 6, Jun 71, Abstract No 6A307 P)

Translation: Devices are known for measurement of group delay time in objects with territorially spaced input and output without using an additional channel for reference frequency transmission. A high-stability oscillator on one fixed frequency is located to each side of the object to be studied. A measurement based on comparing the phases of the measurement and reference signals is carried out on the reception side. In order to increase precision and reduce the lower level of measurements, the proposed device utilizes a signal shaped by an additional divider on the transmitting side of the communications channel for controlling a wobbulator, and a selector is used for additional modulation of the sweep frequency signal during only forward sweep. A selector and control pulse shaper are used for precontrol of the counter divider on the reception side of the communications channel. E. L.

1/1

APPROVED FOR RELEASE: 09/01/2001 CIA-RDP86-00513R002202020014-8"

"APPROVED FOR RELEASE: 09/01/2001 CIA-RDP86-00513R002202020014-8

UNCLASSIFIED PROCESSING DATE--02OCT70

1/2 009

TITLE--MAGNETOTELLURIC SOUNDINGS IN THE SOUTH OF THE SIBERIAN PLATFORM AND BAIKAL RIFT ZONE -U-

AUTHOR-(03)-GORNOSTAYEV, V.P., MIKHALEVSKIY, V.I., POSPEYEV, V.I.

COUNTRY OF INFO--USSR

SOURCE--GEOLOGIYA I GEOFIZIKA, 1970, NR 4, PP 111-118

DATE PUBLISHED--------70

SUBJECT AREAS--EARTH SCIENCES AND OCEANOGRAPHY

TOPIC TAGS--MAGNETOTELLURIC SOUNDING, GEOELECTRIC FIELD, EARTH CRUST, UPPER MANTLE, MODEL

CONTROL MARKING--NO RESTRICTIONS

DOCUMENT CLASS--UNCLASSIFIED

STEP NO--UR/0210/70/000/004/0111/0118

PROXY REEL/FRAME--1994/0052

CIRC ACCESSION NO--AP0114448

UNCLASSIFIED

APPROVED FOR RELEASE: 09/01/2001 CIA-RDP86-00513R002202020014-8"

"APPROVED FOR RELEASE: 09/01/2001 CIA-RDP86-00513R002202020014-8

UNCLASSIFIED

PROCESSING DATE--02OCT70

2/2 009

CIRC ACCESSION NO--AP0114448

ABSTRACT/EXTRACT--(U) GP-0- ABSTRACT. THE RESULTS OF DEEP MAGNETOTELLURIC SOUNDINGS (MTS) HAVE BEEN MADE DURING 1961-1969 YEARS IN PRIBAIKALIA ARE CONSIDERED IN THE PAPER. THREE AREAS (BLOCKS) ARE SUPPOSED IN THE TERRITORY OF PRIBAIKALIA, BASED UPON REPRESENTATIVE DATA: PLATFORM ONE, RIFT AND TRANSITIONAL WITH DIFFERENT GEOELECTRIC MODEL OF THE EARTH'S CRUST SECTION AND UPPER MANTLE. THE CONVENTIONAL BOUNDARIES OF THESE AREAS ARE ORIENTED IN PARALLEL TO BAIKALIAN RIFT ZONE. DIFFERENT THERMAL REGIME IN LISTED AREAS IS SUGGESTED AS A MAIN REASON OF CRUSTAL AND MANTLE GEOELECTRIC MODEL CHANGE FROM PLATFORM BLOCK TO RIFT ONE. FACILITY: VOSTOCHNYY GEOFIZICHESKIY TREST VOSTSIBNIIGGIMS, IRKUTSK.

UNCLASSIFIED

APPROVED FOR RELEASE: 09/01/2001 CIA-RDP86-00513R002202020014-8"

"APPROVED FOR RELEASE: 09/01/2001 CIA-RDP86-00513R002202020014-8

UDC 621.397:621.396.4

USSR

BELENKIY, Ya. Ye., MIKHALEVSKIY, V. I., TIDENKO, A. G., TSERKOVNYUK, E. A.

"Device for Automatic Supervision of Test Lines and Their Division into a Given Number of Intervals"

Otbor i peredacha inform. Resp. mezhved. sb. (Information Sorting and Transmission. Republic Interdepartmental Collection), 1970, vyp. 23, pp 77-82 (from RZh-Radiotekhnika, No 8, Aug 70, Abstract No 8G220)

Translation: This article contains a description of an economical transistor unit permitting automatic separation of arbitrary TV signal line intervals and also separation of them into a given number of intervals. The pulse train generated by the unit realizes control of the transducers for shaping test signals of complex shape. The bibliography has three entries.

1/1

APPROVED FOR RELEASE: 09/01/2001 CIA-RDP86-00513R002202020014-8"

"APPROVED FOR RELEASE: 09/01/2001 CIA-RDP86-00513R002202020014-8

USSR UDC: 621.375.82

KEYDAN, V. F., MIKHALEVSKIY, V. S., SEM, M. F., and SHELEPO, A. P.

"Oscillations in Ionized Selenium"

Moscow, V sb. Kvant. elektronika (Quantum Electronics--collection of works) "Sov. radio," No 1(13), 1973, pp 75-78 (from RZh--Fizika, No 7, 1973, Abstract No 7D1015)

Translation: The characteristics of oscillations in selenium ion transitions are investigated in pulsed continuous operation. It is established that in a pulsed discharge, the upper energy level population may originate in electronic excitation from the base state of the atom as well as the recharge of the helium ions with neutral selenium atoms. In continuous operation, the dependence of the generated power on the discharge conditions is determined, the plasma parameters are measured, and the pumping velocity of the upper levels of the laser transitions by the recharging and electronic excitation processes is calculated. Comparison of the computed pumping velocity with the measured velocity showed that in continuous operation the principal contribution to the creation of the population inversion at the energy levels of the selenium ion is made by the recharging. Authors' abstract

1/1

APPROVED FOR RELEASE: 09/01/2001 CIA-RDP86-00513R002202020014-8"

"APPROVED FOR RELEASE: 09/01/2001 CIA-RDP86-00513R002202020014-8

UDC: 621.372.85

USSR

GAL'CHENKO, N. A., LERER, A. M., [redacted]

"A Thin Inductive Line Stretcher in E- and H-Waveguides"

Kiev, IVUZ: Radioelektronika, Vol 15, No 3, Mar 72, pp 302-307

Abstract: A modified Shwarz method is used as a basis for a theoretical analysis of a nonhomogeneity in the form of a thin inductive rod in E- and H-waveguides. The resultant formulas are sufficiently accurate for practical purposes in calculating shunting impedance.

1/1

APPROVED FOR RELEASE: 09/01/2001 CIA-RDP86-00513R002202020014-8"

"APPROVED FOR RELEASE: 09/01/2001 CIA-RDP86-00513R002202020014-8

UDC 621.372.2.001.24

USSR

GAL'CHENKO, N. A., MIKHALEVSKIY, V. S.

"Application of the Schwartz Method to Calculating the Electric Parameters of Band Transmission Lines"

Moscow, Radiotekhnika i elektronika, Vol XVII, No 2, 1972, pp 240-246

Abstract: A study was made of the alternating Schwartz method for calculating the basic electrical parameters of band transmission lines. The characteristics of specific band lines were analyzed. The proposed method is quite effective for calculating the fields and characteristic resistance of band transmission lines. Generalization of the method to the case of connected band transmission lines with arbitrary dimensions of the internal conductors causes no theoretical difficulties. The defined advantages of the Schwartz method make its use expedient also when studying higher types of waves [N. A. Gal'chenko, Radiotekhnika i elektronika, Vol 15, No 12, 2504, 1970]. Symmetric band lines, channel lines, a band line with arbitrary arrangement of the internal conductor and a rectangular line were investigated.

1/1

APPROVED FOR RELEASE: 09/01/2001 CIA-RDP86-00513R002202020014-8"

"APPROVED FOR RELEASE: 09/01/2001 CIA-RDP86-00513R002202020014-8

Acc. Nr.: AP0040393

Ref. Code: UR0109

UDC 621.372.825.09 JPRS 52248

USSR

GAL'CHENKO, N. A., and MIKHALEVSKIY, V. S.

"Application of the Schwartz Method to Calculation of U and L Waveguides Electrical Parameters"

Moscow, AN SSSR, Radiotekhnika i Elektronika Vol 15, Jan 70, No 1, pp 51-57

Abstract: This article describes a practical application of the alternating Schwartz method to the problem of determining the electrical parameters of U and L waveguides, which makes it possible to obtain simple and compact formulas ensuring more accurate approximation. This method makes it possible to solve the problem for the region $D = D1 + D_2$ if successive solutions for each of these D_1 and D_2 regions containing a common region D^1 can be obtained. The numerical results of calculation of the critical frequency (H_{10} wave) for U and L waveguides are presented in tables. An approximate calculation of the series of the trascendental equation (10) is given in the appendix. Original article has 3 figures, 20 formulas and 2 tables.

Reel/Frame
19741842

APPROVED FOR RELEASE: 09/01/2001 CIA-RDP86-00513R002202020014-8"

"APPROVED FOR RELEASE: 09/01/2001 CIA-RDP86-00513R002202020014-8

USSR UDC 621.372.825.09

GAL'CHENKO, N. A., and MIKHALEVSKIY, V. S.

"Application of the Schwartz Method to Calculation of ⊔ and ⊏ Waveguides Electrical Parameters"

Moscow, AN SSSR, Radiotekhnika i Elektronika Vol 15, Jan 70, No 1, pp 51-57

Abstract: This article describes a practical application of the alternating Schwartz method to the problem of determining the electrical parameters of ⊔ and ⊏ waveguides, which makes it possible to obtain simple and compact formulas ensuring more accurate approximation. This method makes it possible to solve the problem for the region $D = D1 + D_2$ if successive solutions for each of these D_1 and D_2 regions containing a common region D^1 can be obtained. The numerical results of calculation of the critical frequency (H_{10} wave) for ⊔ and ⊏ waveguides are presented in tables. An approximate calculation of the series of the trascendental equation (10) is given in the appendix. Original article has 3 figures, 20 formulas and 2 tables.

1/1

APPROVED FOR RELEASE: 09/01/2001 CIA-RDP86-00513R002202020014-8"

"APPROVED FOR RELEASE: 09/01/2001 CIA-RDP86-00513R002202020014-8

UDC 539.374

USSR

NEMIROVSKIY, YU. V., SHABLIY, O. N., MIKHALISHIN, M. S., Novosibirsk, Ternopol'

"Limiting State of Structural Elements Made of Materials with Different Yield Points under Tensile and Compressive Loads"

Kiev, Prikladnaya Mekhanika, Vol IX, No 10, 1973, pp 3-11

Abstract: This paper was given at the Symposium on New Methods of Calculating Strength and Rigidity held in Nikolayev on 24-27 May 1972. A study was made of the limiting equilibrium of thin plates and shells executed from material with different yield points under tensile and compressive loads. The yield hypersurfaces were constructed for cases where the material of the structural element is subjected to linearizations of the Balandin plasticity condition of the Tresk type [P. P. Balandin, "Problem of Strength Hypotheses," Vestnik inzhenerov i tekhnikov, No 1, 1937] and maximum reduced stress. The complete solutions of the problems of limiting equilibrium of circular and annular plates were obtained as examples. Known solutions were obtained in the special case of "unimodular" material.

1/1

APPROVED FOR RELEASE: 09/01/2001 CIA-RDP86-00513R002202020014-8"

"APPROVED FOR RELEASE: 09/01/2001 CIA-RDP86-00513R002202020014-8

1/2 019 UNCLASSIFIED PROCESSING DATE--27NOV70

TITLE--CARRYING CAPACITY OF SHALLOW SHELLS OF REVOLUTION WHOSE MATERIAL HAS DIFFERENT YIELD POINTS IN TENSION AND COMPRESSION -U-

AUTHOR-(02)-SHABLIY, O.N., MIKHALISHIN, M.S.

COUNTRY OF INFO--USSR

SOURCE--PROBLEMY PROCHNOSTI, VOL. 2, MAY 1970, P. 52-58

DATE PUBLISHED--------70

SUBJECT AREAS--MECH., IND., CIVIL AND MARINE ENGR

TOPIC TAGS--SHELL STRUCTURE STABILITY, SHELL THEORY, MATHEMATIC EXPRESSION, STRESS LOAD, SHELL OF REVOLUTION

CONTROL MARKING--NO RESTRICTIONS

DOCUMENT CLASS--UNCLASSIFIED

PROXY REEL/FRAME--3006/1437 STEP NO--UR/3663/70/002/000/0052/0058

CIRC ACCESSION NO--AP0135108

UNCLASSIFIED

APPROVED FOR RELEASE: 09/01/2001 CIA-RDP86-00513R002202020014-8"

"APPROVED FOR RELEASE: 09/01/2001 CIA-RDP86-00513R002202020014-8

2/2 019 UNCLASSIFIED PROCESSING DATE--27NOV70

CIRC ACCESSION NO--AP0135108

ABSTRACT/EXTRACT--(U) GP-0- ABSTRACT. DERIVATION OF RELATIONS FOR CALCULATING THE CRITICAL LOAD AS A FUNCTION OF THE GEOMETRIC AND MATERIAL PARAMETERS OF A SHALLOW SHELL OF REVOLUTION MADE FROM A MATERIAL HAVING DIFFERENT YIELD POINTS UNDER TENSION AND COMPRESSION. THE RELATIONS ARE DERIVED WITH THE AID OF PRAGER'S (1958) AND LEPIK'S (1969) YIELD CONDITIONS. THE USE OF THE RELATIONS IS DEMONSTRATED IN APPLICATION TO A SHALLOW SPHERICAL SHELL SUBJECTED TO UNIFORMLY DISTRIBUTED EXTERNAL PRESSURE. FACILITY: L'VOVSKII POLITEKHNICHESKII INSTITUT, TERNOPOL, UKRAINIAN SSR.

UNCLASSIFIED

APPROVED FOR RELEASE: 09/01/2001 CIA-RDP86-00513R002202020014-8"

"APPROVED FOR RELEASE: 09/01/2001 CIA-RDP86-00513R002202020014-8

UNCLASSIFIED PROCESSING DATE--20NOV70

1/2 049

TITLE--OXIDATION OF TANTALUM IN THE OXYGEN PLASMA OF A HIGH FREQUENCY DISCHARGE -U-

AUTHOR-(02)-MIKHALKIN, V.S., ODYNETS, L.L.

COUNTRY OF INFO--USSR

SOURCE--ELEKTROKHIMIYA. MAR. 1970, 6,(3), 359-361

DATE PUBLISHED----MAR70

SUBJECT AREAS--CHEMISTRY, PHYSICS, MATERIALS

TOPIC TAGS--OXYGEN, TANTALUM, PLASMA DISCHARGE, OXIDATION, METAL OXIDE, BIBLIOGRAPHY, CHEMICAL KINETICS, ELECTROLYTE, ELECTRIC PROPERTY, OXIDE FILM

CONTROL MARKING--NO RESTRICTIONS

DOCUMENT CLASS--UNCLASSIFIED STEP NO--UR/0364/70/006/003/0359/0361

PROXY REEL/FRAME--2000/0303

STEP ACCESSION NO--AP0124062 UNCLASSIFIED

APPROVED FOR RELEASE: 09/01/2001 CIA-RDP86-00513R002202020014-8"

"APPROVED FOR RELEASE: 09/01/2001 CIA-RDP86-00513R002202020014-8

UNCLASSIFIED

PROCESSING DATE--20NOV70

2/2 049

CIRC ACCESSION NO--AP0124062

ABSTRACT/EXTRACT--(U) GP-0- ABSTRACT. THE KINETICS OF THE OXIDATION OF TA IN THE O PLASMA OF A H.F. ELECTRODELESS GAS DISCHARGE WERE STUDIED TOGETHER WITH THE ELECTRICAL PROPERTIES AND PROTECTIVE CHARACTERISTICS OF THE RESULTANT OXIDE FILMS. THE KINETIC LAWS GOVERNING THE OXIDATION OF THE METAL SURFACE IN THE GAS DISCHARGE WERE CLOSELY ANALOGOUS TO THOSE GOVERNING ANODIC OXIDATION IN ELECTROLYTES; APPARENTLY VERY MUCH THE SAMMECHANISMS OF OXIDE FORMATION PERSISTED IN BOTH CASES. THE QUALITY OF THE OXIDE FILMS DEPENDED TO SOME EXTENT ON THE ELECTRICAL CONDITICNS (DISCHARGE VOLTATE, ETC.).

UNCLASSIFIED

APPROVED FOR RELEASE: 09/01/2001 CIA-RDP86-00513R002202020014-8"

"APPROVED FOR RELEASE: 09/01/2001 CIA-RDP86-00513R002202020014-8

KAN/ / K-760 / 5-ANN-73

Dec 72

Kopan', V. S., A. V. Lysenko, and V. D. Mikhalko.
Effect of surface reinforcement and the medium on properties of aluminum and tin laminated materials.
F-KhMM, no. 6, 1971, 15-17.

The purpose of this article is to establish the dependence of microviscosity limits on the specific contribution of the inner surfaces in a multilayer Al-Sn composition (MLC) and to determine possible causes of observed phenomena. The authors establish that the tensile strength of MLC depends on the average thickness of a single layer (the critical thickness is 0.1 μm) and increases with increased inner surface area. The reinforcement is explained by changes in the dislocation structure on the metal interlayer surfaces. Earlier structural studies of the boundaries between the monocrystals of different elements established the existence of an incongruity dislocation lattice acting as an effective barrier for sliding dislocations. The effectiveness of this lattice possibly increases with the increased interlayer area and has a pronounced effect on the microviscosity limits. The existence of a single critical deformation amplitude indicates that the changes of the centers of the dislocation lattice on the interlayer boundary are probable causes of the collapse of the dislocation lattice in MLC layers. Tensile stress has a tendency to increase with a decrease of individual layer thickness. Experimental durability tests of Al-Sn MLC, as a function of time exposure to humidity, show a pronounced decrease of durability with increased exposure. The changes in density and mass of a test sample are explained by interlayer boundary corrosion. Soaking of the sample in distilled water resulted in its total dissolution within 24 hours, comprising non-metallic sediments. The solubility of the sample increased as its layer thickness decreased. The above phenomena are explained by the intensive corrosive processes which take place on the interlayer boundaries.

MIKHALKO, V.D.

APPROVED FOR RELEASE: 09/01/2001 CIA-RDP86-00513R002202020014-8"

"APPROVED FOR RELEASE: 09/01/2001 CIA-RDP86-00513R002202020014-8

UDC 539.67

USSR

ZHMUDSKIY, A. Z., MIKHALKO, V. D., and MAKSIMYUK, P. A.

"Investigation of Internal Friction in Al-Mg-Li Alloys"

Sb. "Vnutrenneye treniye v metallicheskikh materialakh" (Internal Friction in Metallic Materials), Moscow, Izd-vo "Nauka", 1970, pp 54-56

Abstract: An investigation was made of the internal friction and natural vibration frequency square f^2 for an Al + 10% Mg + 2% Li alloy by the method of a low-temperature twisted pendulum.

The magnitude of activation energy was calculated and the behavior of a 70° peak under the effect of cold hardening was investigated. Conclusions regarding the possibility of the penetration of lithium atoms into the aluminum are presented. 4 figures, 5 references.

1/1

APPROVED FOR RELEASE: 09/01/2001 CIA-RDP86-00513R002202020014-8"

"APPROVED FOR RELEASE: 09/01/2001 CIA-RDP86-00513R002202020014-8

1/2 020 UNCLASSIFIED PROCESSING DATE--18SEP70

TITLE--NEUTRON DIFFRACTION STUDY OF AN ALUMINUM AND LITHIUM ALLOY -U-

AUTHOR-(04)-NOZIK, YU.Z., LIPIN, YU.V., MAKSIMYUK, P.A., NIKHALKO, V.D.

COUNTRY OF INFO--USSR

SOURCE--LATV. PSR ZINAT. AKAD. VESTIS, FIZ. ZINAT. SER. 1970, (1), 88-90

DATE PUBLISHED--------70

SUBJECT AREAS--MATERIALS

TOPIC TAGS--LITHIUM ALLOY, ALUMINUM ALLOY, MODEL, CRYSTAL STRUCTURE ANALYSIS, NEUTRON DIFFRACTION

CONTROL MARKING--NO RESTRICTIONS

DOCUMENT CLASS--UNCLASSIFIED
PROXY REEL/FRAME--1988/0609 STEP NO--UR/0371/70/000/001/0088/0090

CIRC ACCESSION NO--AP0105592
UNCLASSIFIED

APPROVED FOR RELEASE: 09/01/2001 CIA-RDP86-00513R002202020014-8"

"APPROVED FOR RELEASE: 09/01/2001 CIA-RDP86-00513R002202020014-8

UNCLASSIFIED PROCESSING DATE--18SEP70

2/2 020

CIRC ACCESSION NO--AP0105592

ABSTRACT/EXTRACT--(U) GP-0- ABSTRACT. AN AL-LI ALLOY CONTG. 4 WT. PERCENT LI (AL SUBO TIMES 84 LI SUB 0 TIMES 16) WAS INVESTIGATED BY NEUTRON DIFFRACTION AND SHOWED, BESIDES THE BASIC LINES CORRESPONDING TO THE PURE AL STRUCTURE, 2 SUPERSTRUCTURE LINES, (100) AND (110), CORRESPONDING TO THE LI ATOMS. THE INTERPRETATION OF THE (100) AND (110) PEAKS LEADS TO 2 MODELS OF LI AT. ARRANGEMENT IN THE AL STRUCTURE: AN OCTAHEDRAL MODEL WITH 111 OVER 222 COORDIATES AND A TETRAHEDRAL MODEL WITH 111 OVER 444 COORDINATES. THE LI ATOMS OCCUPY THE OCTAHEDRAL POSITIONS IN THE FCC. LATTICE OF AL. THE INSUFFICIENT SHARPNESS OF THE (100) AND (110) PEAK INTENSITIES, DUE TO THE SMALL AMT. OF LI IN THE ALLOY, DOES NOT ALLOW THE AMT. OF LI IN THE OCTAHEDRAL POSITION TO BE CALCD., AND THUS, NO INFORMATION ON THE SUBSTITUTION OF LI ATOMS IN THE AL STRUCTURE COULD BE OBTAINED.

UNCLASSIFIED

APPROVED FOR RELEASE: 09/01/2001 CIA-RDP86-00513R002202020014-8"