"APPROVED FOR RELEASE: 09/17/2001 CIA-RDP86-00513R002202210010-1

USSR

UDC: 621.396.69:621.314.2(088.8)

NEKRASOV, M. M., LAVRINENKO, V. V., PLAKHOTNYY, N. V., KHRASHCHEVSKIY, V. A.,
Kiev Polytechnical Institute

"A Method of Making Multilayered Piezoelectric Transformers"

USSR Author's Certificate No 264497, filed 26 Jul 68, published 12 Jun 70
(from RZh-Radiotekhnika, No 12, Dec 70, Abstract No 12V387 P)

Translation: A method is proposed for making multilayered piezoelectric transformers. The procedure is based on making the excitation sections from separate plates with subsequent acoustic joining of the sections. To increase the trnasformation ratio, useful power and maximum permissible stresses, the plates of the excitation section are made from an unannealed piezoelectric material by pouring the slip onto the substrate, and acoustic joining of the sections is done simultaneously with brazing of the electrodes by pressing the sections in bundles at the ceramic sintering temperature.

1/1

APPROVED FOR RELEASE: 09/17/2001 CIA-RDP86-00513R002202210010-1"

"APPROVED FOR RELEASE: 09/17/2001 CIA-RDP86-00513R002202210010-1

USSR UDC: 621.372.85

NEKRASOV, M. M., BERNSHTEYN, E. A., POPLAVKO, Yu. M., RUDYACHENKO, N. K., [illegible], B. Ya.

"Investigation of the Effect of Temperature Self-Stabilization in the SHF Band"

Elektron. tekhnika. Nauchno-tekhn. sb. Radiodetali (Electronic Technology. Scientific and Technical Collection. Radio Components), 1970, vyp. 1(18), pp 47-50 (from RZh-Radiotekhnika, No 11, Nov 70, Abstract No 11B152)

Translation: The authors discuss the effect of temperature self-stabilization which is observed in some ferroelectric crystals. Strong dielectric dispersion which occasions considerable losses in the ferroelectric phase results in the establishment of the SHF temperature self-stabilization mode. These losses lead to intensive heat release and heating of the ferroelectric by a SHF field past the Curie point. The results of an experimental study of ferroelectrics in strong SHF fields are given. Experimental relationships are given for the coefficient of losses in ferroelectrics as a function of temperature, as well as relationships for the dielectric constant and through power as functions of the suppressed power in the SHF range for a polycrystal specimen of barium titanate with impurities. The experiment was carried out on a frequency of 10 GHz. Four illustrations, bibliography of nine titles.
V. S.

1/1

APPROVED FOR RELEASE: 09/17/2001 CIA-RDP86-00513R002202210010-1"

"APPROVED FOR RELEASE: 09/17/2001 CIA-RDP86-00513R002202210010-1

USSR UDC 621.314.222.6

NEKRASOV, M. M., GUL'TYAYEVA, L. G., and ZLOGODUKH, G. M.

"Piezoceramic Shift-Type Transformers"

Kiev, Izvestiya VUZov SSSR--Radioelektronika, No. 5, 1970, pp 608-613

Abstract: The transformer is an electromechanical device with a double energy conversion capable of transforming an electrical voltage to mechanical oscillations (or the harmonics) caused by the resonance amplification of stresses and voltages. In the simplest case, the piezoceramic transformer is a three-lead component made of a piezoceramic bar with surface electrodes, and consists of an exciter and an oscillator. A periodic electric field applied to the exciter causes the whole bar to oscillate mechanically as a result of the inverse piezoelectric effect. Resonance oscillations and standing waves result at particular frequencies, the natural mechanical frequencies along one of the geometric dimensions. The amplitudes of the elastic stresses and strains are given a resonance amplification, and these stresses set up an electric field at the oscillator electrodes. The equivalent circuit of the piezotransformer is given, and some computational equations are derived. Also shown are diagrams of various arrangements of these transformers. The curve for the transformer coefficient as a

APPROVED FOR RELEASE: 09/17/2001 CIA-RDP86-00513R002202210010-1"

"APPROVED FOR RELEASE: 09/17/2001 CIA-RDP86-00513R002202210010-1

USSR

NEKRASOV, M. M., et al, Izvestiya VUZov SSSR--Radioelektronika, No 5, 1970, pp 608-613

function of the frequency indicates that a change in the load capacitance causes a change in the output signal amplitude as well as a large shift in the resonant frequency. These devices can thus be used in measurement devices involving sensors with a resonant circuit.

2/2

APPROVED FOR RELEASE: 09/17/2001 CIA-RDP86-00513R002202210010-1"

"APPROVED FOR RELEASE: 09/17/2001 CIA-RDP86-00513R002202210010-1

1/2 009 UNCLASSIFIED PROCESSING DATE--27NOV70

TITLE--A UNIQUE FOUNDATION -U-

AUTHOR--NEKRASOV, V.

N

COUNTRY OF INFO--USSR

SOURCE--STROITEL,NAYA GAZETA, JUNE 28, 1970, P 3, COL 1

DATE PUBLISHED--28JUN70

SUBJECT AREAS--BEHAVIORAL AND SOCIAL SCIENCES, MECH., IND., CIVIL AND MARINE ENGR

TOPIC TAGS--PHYSICS INSTITUTE, PRESS

CONTROL MARKING--NO RESTRICTIONS

DOCUMENT CLASS--UNCLASSIFIED

PROXY REEL/FRAME--1992/0784 STEP NO--UR/9024/70/000/000/0003/0003

CIRC ACCESSION NO--AN0111970

UNCLASSIFIED

APPROVED FOR RELEASE: 09/17/2001 CIA-RDP86-00513R002202210010-1"

"APPROVED FOR RELEASE: 09/17/2001 CIA-RDP86-00513R002202210010-1

2/2 009 UNCLASSIFIED PROCESSING DATE--27NOV70

CIRC ACCESSION NO--AN0111970

ABSTRACT/EXTRACT--(U) GP-0- ABSTRACT. IT IS BEING REPORTED THAT A PRESS BUILDING IS UNDER CONSTRUCTION AT THE INSTITUTE OF HIGH PRESSURE PHYSICS AT THE KRASNAYA PAKHRA RESEARCH CENTER. THE CONSTRUCTION WORK IS HANDLED BY THE TSENTRAKADEMSTROY AND SPECIAL BUILDING ORGANIZATIONS OF THE MINISTRY OF ERECTION AND ASSEMBLY WORK, U.S.S.R. THE PRESS BUILDING WILL HOUSE A "UNIQUE" 50,000 TON PRESS. THE THICKNESS OF THE PRESS FOUNDATION WILL BE 11 METERS. FACILITY: TSENTRAKADEMSTROY OF THE ACADEMY OF SCIENCES, U.S.S.R.

UNCLASSIFIED

APPROVED FOR RELEASE: 09/17/2001 CIA-RDP86-00513R002202210010-1"

"APPROVED FOR RELEASE: 09/17/2001 CIA-RDP86-00513R002202210010-1

USSR UDC 621.396.6-181.48

GORLOV, M. I., YEROKHIN, V. S., NEKRASOV, V. A., and CHERNYSHOV, V. V.

"Character of the Changes in the Noise Properties of DTL Type (Diode-Transformer Logical) Integrated Circuits Depending on Type of Testing"

Sb. tr. po poluprovodnikovym materialam, priboram i ikh primeneniyu (Collected Works on Semiconductor Materials, Instruments and Their Use), Voronezh, 1971, pp 182-188 (from RZh-Radiotekhnika, No 11, Nov 72, Abstract No 11 V223)

Translation: The authors analyze the results of tests performed on four sets of microcircuits with approximately the same noise level values for each set. The microcircuits were subjected to various types of influences: effect of humidity, thermocycling, tests for cold and heat resistance, and, in addition, all microcircuits were subjected to testing for 500 hours with respect to operational reliability at +125° under switching conditions. Original article: five illustrations, one bibliographic entry. N.S.

1/1

APPROVED FOR RELEASE: 09/17/2001 CIA-RDP86-00513R002202210010-1"

"APPROVED FOR RELEASE: 09/17/2001 CIA-RDP86-00513R002202210010-1

USSR UDC: 621.315.3

SHCHERBAKOV, G. P., TROSHKOVA, I. I., TOLMACHEVA, A. Ye., NEKRASOV, V. A., PAVLOVA, N. N.

"The Drop Method of Removing the Glass Insulation From Microwires and its Possibilities"

Elektron. tekhnika. Nauchno-tekhn. sb. Radiokomponenty (Electronic Technology. Scientific and Technical Collection. Radio Components), 1970, vyp. 1, pp 153-158 (from RZh-Radiotekhnika, No 5, May 71, Abstract No 5V421)

Translation: The authors evaluate the possibilities of using the drop method of removing glass insulation to produce a contact joint in making filament resistors and voltage dividers, and in adjusting resistors to their rated value. It is experimentally shown that organic insulation of the Teflon type can be applied to the wire. Some characteristics of the molten drop are given (rate of glass destruction, etc.), together with the strength parameters of the wire. Resumé.

APPROVED FOR RELEASE: 09/17/2001 CIA-RDP86-00513R002202210010-1"

"APPROVED FOR RELEASE: 09/17/2001 CIA-RDP86-00513R002202210010-1

USSR UDC 621.039

GUDKOV, A. N., KOLOBASHKIN, V. M., NEKRASOV, V. I., and HOZYAINOV, M. S.

"Certain Characteristics of the Development Rate of Nuclear Power Engineering"

V sb. Vopr. dozimetrii i zashchity ot izluch. (Problems in Dosimetry and Radiation Shielding — Collection of Works), No 11, Moscow, Atomizdat, 1970, pp 194-197 (from RZh-Fizika, No 4, Apr 71, Abstract No 4V515)

Translation: On the basis of an analysis of published data, the author established that in the period 1961-1971 reactor power in the world increased exponentially with a rate of growth $\beta = 0.28 \pm 0.03$ year^{-1}, corresponding to doubling of power in approximately 2.5 years. Data is presented on the geographical distribution of the capacities of atomic power stations.

1/1

APPROVED FOR RELEASE: 09/17/2001 CIA-RDP86-00513R002202210010-1"

"APPROVED FOR RELEASE: 09/17/2001 CIA-RDP86-00513R002202210010-1

UNCLASSIFIED

1/2 050 PROCESSING DATE--18SEP70

TITLE--EMISSION PROPERTIES OF DISTRIBUTING THERMIONIC CATHODES WITH SPUTTERED METAL FILMS -U-

AUTHOR-(02)-NEKRASOV, V.I., DRUZHININ, A.V.

COUNTRY OF INFO--USSR

SOURCE--RADIOTEKH. ELEKTRON. 1970, 15(2), 411-13

DATE PUBLISHED--------70

SUBJECT AREAS--MATERIALS

TOPIC TAGS--REFRACTORY METAL, METAL COATING, CATHODE SPUTTERING, OSMIUM, IRIDIUM, PLATINUM, TANTALUM, RUTHENIUM, RHENIUM, THERMIONIC EMISSION, WORK FUNCTION, TUNGSTEN, ALUMINUM OXIDE

CONTROL MARKING--NO RESTRICTIONS

DOCUMENT CLASS--UNCLASSIFIED

PROXY REEL/FRAME--1984/1283 STEP NO--UR/0109/70/015/002/0411/0413

CIRC ACCESSION NO--AP0055954

UNCLASSIFIED

APPROVED FOR RELEASE: 09/17/2001 CIA-RDP86-00513R002202210010-1"

"APPROVED FOR RELEASE: 09/17/2001 CIA-RDP86-00513R002202210010-1

2/2 050 UNCLASSIFIED PROCESSING DATE--18SEP70

CIRC ACCESSION NO--AP0055954

ABSTRACT/EXTRACT--(U) GP-0- ABSTRACT. THE EFFECT WAS DETD. OF COATINGS OF REFRACTORY METALS (OS, IR, PT, TA, RU, AND RE) 0.3-1 MU THICK ON THE EMISSION FROM CATHODES PREPD. BY THE STANDARD TECHNOLOGY FROM 3BAO.0.5CAO.-AL SUB2 O SUB3 AND W. THE CATHODES WITH THE OS COATING HAVE THE LOWEST WORK FUNCTION. OF THE REMAINING METALS ONLY IR DECREASES THE WORK FUNCTION. THE REMAINING METALS INCREASE THE WORK FUNCTION OF THE CATHODE AND IMPAIR THE EMISSION PROPERTIES. THE TEMP. DEPENDENCE WAS DETD. FOR THE WORK FUNCTION AND THE EMISSION CURRENT FOR CATHODES WITH AN OS COATING AND WITHOUT ANY COATING. THE COATED CATHODES AT 1000-1400DEGREES HAVE A WORK FUNCTION 0.15-0.2 EV LESS THAN THE UNCOATED CATHODE AND 6-8 FOLD INCREASE IN THE EMISSION C.D. THE EMISSION PROPERTIES OF THE COATED CATHODES ARE RETAINED FOR AT LEAST 3000 HR AT 1420-50DEGREESK.

UNCLASSIFIED

APPROVED FOR RELEASE: 09/17/2001 CIA-RDP86-00513R002202210010-1"

"APPROVED FOR RELEASE: 09/17/2001 CIA-RDP86-00513R002202210010-1

psychological

representatives of the medical service are standing watch. They are engaged in continuous monitoring of the physical and psychological states of crew members. The medical instrumentation has been activated and on a broad paper tape an automatic recorder is printing out curves and dashed lines which represent the complex of physiological indices for lunokhod crew members. This will make it possible to evaluate the level of their neuroemotional stress.

...Now the horizon has disappeared on the screens of the video-monitoring devices. The lunokhod has entered a crater and the field of view of its television camera rests on a slope studded with rocks. Immediately there is a change in the nature of the curves on the paper tape. But the vehicle has reached an even site and its side-to-side and fore-to-aft listing is normal. The curves and lines also become normal.

"The lunokhod crew members," states V. P. Nekrasov, director of the medical service, "are experiencing great physical and emotional stress. The level of their psychological stress during the time of their work is exceptionally high. Accordingly, we have introduced constant monitoring of performance which will to a great extent determine the reliability of actions by crew members and the correctness of the decisions which they have adopted..."

Such observations are not being made only during the time of communication contacts with the self-propelled vehicle. Special portable apparatus is being used in systematic evaluation of changes in a number of psycho-physiological indices, including the state of the visual and motor analyzers and also the key psychic functions: memory, attention and cogitation.

V. P. Nekrasov demonstrates an electronic instrument created for this purpose. On a small panel there is an array of small lights and buttons. For example, it is necessary to take in the hand a pin, a thin metal rod, and to insert it into an opening with a diameter a little larger and during a definite time period attempt to hold it in such a way that it will not touch the walls. I do this, what seems to be a simple operation, but I immediately hear the warning sound of a buzzer: the pin has touched the walls. A high performance is exhibited by anyone who holds the pin in its socket for 20 seconds while touching the walls of the opening not more than 10 times.

Another test is for emotional stability. A small red lamp lights up before you on the panel. It must be extinguished as quickly as possible by pressing a button. In order to obtain a high rating one must press the button not later than 1/5th of a second. But now unexpectedly a small white lamp lights up before you. An emotionally stable man must not react to it.

There is a more complex experiment in which two men compete in extinguishing the red lamp. Each man has his own button. Using a measuring instrument the physician precisely determines which of the competitors

NEKRASOV, V. P.

JPRS 58437
9 MAR. 73

APPROVED FOR RELEASE: 09/17/2001 CIA-RDP86-00513R002202210010-1"

"APPROVED FOR RELEASE: 09/17/2001 CIA-RDP86-00513R002202210010-1

USSR UDC 621.165-226.2

MUSTAFIN, Ch. G., NEKRASOV, V. V., Leningrad

"Improvement of Profiles of the Tail Connections with Turbine Blade Shoulders"

Keiv, Problemy Prochnosti, No 8, Aug 73, pp 81-84.

Abstract: Results are presented from experimental studies using short-base (1 mm) tensometer sensors, defining the distribution of maximum elastic stresses in tail joints with turbine blade shoulders with supporting surfaced perpendicular to the axis of symmetry of the profile. It is suggested that profiles be improved by making the supporting surfaces with skew angles greater than 0. It is demonstrated that tail joints of the improved design have maximum elastic stresses 2 to 3 times less than those currently used with 0 skew angle.

1/1

APPROVED FOR RELEASE: 09/17/2001 CIA-RDP86-00513R002202210010-1"

"APPROVED FOR RELEASE: 09/17/2001 CIA-RDP86-00513R002202210010-1

1/2 019 UNCLASSIFIED PROCESSING DATE--11DEC70

TITLE--THE POPULATION DENSITY OF THE RED CHEEKED SUSLIK ON THE NORTHERN BOUNDARY OF ITS ZONE -U-

AUTHOR--NEKRASOV, YE.S.

N

COUNTRY OF INFO--USSR

SOURCE--EKOLOGIYA, 1970, NR 1, P. 103

DATE PUBLISHED--15SEP70

SUBJECT AREAS--BIOLOGICAL AND MEDICAL SCIENCES

TOPIC TAGS--RODENT, ECOLOGY

CONTROL MARKING--NO RESTRICTIONS

DOCUMENT CLASS--UNCLASSIFIED

PROXY FICHE NO----FD70/605049/E02 STEP NO--UR/0752/70/000/001/0103/0103

CIRC ACCESSION NO--AP0143383

UNCLASSIFIED

APPROVED FOR RELEASE: 09/17/2001 CIA-RDP86-00513R002202210010-1"

"APPROVED FOR RELEASE: 09/17/2001 CIA-RDP86-00513R002202210010-1

2/2 019 UNCLASSIFIED PROCESSING DATE--11DEC70

CIRC ACCESSION NO--AP0143383

ABSTRACT/EXTRACT--(U) GP-0- ABSTRACT. THE DISTRIBUTION, DENSITY AND SOME BIOLOGICAL CHARACTERISTICS OF COLONIES OF THE RED CHEEKED SUSLIK (BITELLUS MAJOR) WERE STUDIED IN 1969 IN THE NORTHERNMOST PART OF ITS ZONE (SYSERT' DISTRICT, SVERDLOVSK REGION). FLOODPLAIN AREAS, WASTELANDS AND PASTURES ARE MOST OFTEN SELECTED FOR THE SCATTERED COLONIES. NO APPRECIABLE POPULATION DENSITY WAS NOTED IN THIS AREA. THE LARGEST COLONY CONTAINED 17 ADULTS AND YOUNG, BUT THE NUMBER SHARPLY DECREASED IN AUGUST AS A RESULT OF EXTERMINATION. THE NUMBER OF YOUNG IN A LITTER VARIED FROM FOUR TO EIGHT, WITH FIVE TO SIX MOST COMMON. THIS INDICATES THAT THE NUMBER OF YOUNG IN THE LITTER DID NOT INCREASE, AS IT SOMETIMES DOES AMONG MAMMALS IN THE NORTHERNMOST PARTS OF THEIR RANGE. FACILITY: URAL'SKIY GOSUDARSTVENNYY UNIVERSITET IMENI A. M. GOR'KOGO, URALS STATE UNIVERSITY IMENI A. M. GOR'KIY.

UNCLASSIFIED

APPROVED FOR RELEASE: 09/17/2001 CIA-RDP86-00513R002202210010-1"

"APPROVED FOR RELEASE: 09/17/2001 CIA-RDP86-00513R002202210010-1

UNCLASSIFIED PROCESSING DATE--04DEC70

1/2 016

TITLE--BLAST FURNACE SMELTING USING BRIQUETTED COKE -U-

AUTHOR-(05)-NEKRASOV, Z.I., KOTOV, K.I., GLADKOV, N.A., GONCHAROV, V.F., ZHEMBUS, N.D.

COUNTRY OF INFO--USSR

SOURCE--MET. GORNORUD. PROM. 1970, (1), 3-5

DATE PUBLISHED--------70

SUBJECT AREAS--MATERIALS

TOPIC TAGS--BLAST FURNACE, COKE, PIG IRON, BRIQUETTING, MECHANICAL STRENGTH

CONTROL MARKING--NO RESTRICTIONS

DOCUMENT CLASS--UNCLASSIFIED

PROXY REEL/FRAME--3005/0914 STEP NO--UR/0383/70/000/001/0003/0005

CIRC ACCESSION NO--AP0133003

UNCLASSIFIED

APPROVED FOR RELEASE: 09/17/2001 CIA-RDP86-00513R002202210010-1"

"APPROVED FOR RELEASE: 09/17/2001 CIA-RDP86-00513R002202210010-1

2/2 016 UNCLASSIFIED PROCESSING DATE--04DEC70

CIRC ACCESSION NO--AP0133003

ABSTRACT/EXTRACT--(U) GP-0- ABSTRACT. FOR THE EXPTL. SMELTING IN A BLAST FURNACE, A CHARGE CONTG. 10PERCENT BRIQUETTED COKE WAS USED. THE COKE SHOWED MECH. STRENGTHS, M SUB40 EQUALS 85-93PERCENT, M SUB10 EQUALS 3.4-8.8PERCENT, AND CONTAINED S 1.25-1.80, ASH 5.81-10.6, AND MOISTURE 5.8-10.6PERCENT. THE PROCESS PARAMETERS OBTAINED WERE COMPARED WITH THOSE OBTAINED WITH THE USE OF THE USUAL COKE. THE PIG IRON PRODUCED SHOWED NORMAL MN AND S AND SOMEWHAT HIGHER SI CONCNS. (0.81, 0.040, AND 0.92PERCENT, RESP). THE BRIQUETTED COKE ON CHARGING SHOWED SUFFICIENT STRENGTH AND DID NOT FORM A BREEZE. THE LENGTH OF THE OXIDIZING ZONE IN THE FURNACE WAS 1000 MM, AND CO DISAPPEARED AT 250-500 MM FROM THE MOUTH OF TUYERE. MAX. TEMPS. IN THE HEARTH AND BOSH WERE 1845 AND 1380DEGREES, RESP., AND THOSE OF THE PIG IRON AND SLAG AT THEIR TAP HOLES WERE 1515 AND 1580DEGREES, RESP. A CHARGE CONTG. 50PERCENT BRIQUETTEE COKE DOES NOT CAUSE ANY COMPLICATIONS IN THE OPERATION OF THE FURNACE.

UNCLASSIFIED

APPROVED FOR RELEASE: 09/17/2001 CIA-RDP86-00513R002202210010-1"

"APPROVED FOR RELEASE: 09/17/2001 CIA-RDP86-00513R002202210010-1

NEKRASOV

A N 0012142

UR9013

AUTHOR-- AKHMATOV, S., CORRESPONDENT

NEWSPAPER-- PRAVDA UKRAINY, JANUARY 10, 1970, P 1, COLS 1-4, AND P 2, COLS 2-4

ABSTRACT-- THE ARTICLE IS A BRIEF BIOGRAPHICAL PROFILE OF ZOT IL ICH NEKRASOV, DIRECTOR OF THE DNEPROPETROVSK INSTITUTE OF FERROUS METALLURGY /APPOINTED IN 1952/, LAUREATE OF THE LENIN AND STATE PRIZES, HERO OF THE SOVIET UNION AND MEMBER OF THE UKRAINIAN ACADEMY OF SCIENCES. HE WAS ELECTED CORRESPONDING MEMBER OF THE UKRAINIAN ACADEMY OF SCIENCES IN 1951. IT WAS ON HIS SUGGESTION THAT THE INSTITUTE OF FERROUS METALLURGY WAS RELOCATED FROM KIYEV TO DNEPROPETROVSK WHERE ITS STAFF GREW TO 1,200 PEOPLE. IN ADDITION TO BEING DIRECTOR OF THE INSTITUTE, NEKRASOV HEADS THE DEPARTMENT OF IRON METALLURGY. A. P. CHEKMAREV, K. F. STARODUBOV, V. D. CHEKHRANOV, I. G. UZLOV, A. V. PRAZDNIKOV, AND YU. N. TARAN ARE MENTIONED AS HIS COLLEAGUES.

1/1 18

19570971

APPROVED FOR RELEASE: 09/17/2001 CIA-RDP86-00513R002202210010-1"

"APPROVED FOR RELEASE: 09/17/2001 CIA-RDP86-00513R002202210010-1

USSR UDC 612.176-06:612.46:[612.124:547.962.4

LANTSBERG, L. A., and NEKRASOVA, A. A., Institute of Cardiology imeni A. L. Myasnikov, Academy of Medical Sciences USSR, and All-Union Institute of Physical Culture, Moscow

"Participation of Kidney and Blood Kinins in Adaptation to Physical Exercise"

Moscow, Kardiologiya, No 9, 1972, pp 58-63

Abstract: A group of 70 persons age 18 to 35 (30 "intellectuals" in good health but not active in sports and 40 well-trained athletes) was required to operate a bicycle ergometer with steadily increasing resistance until they were physically unable to continue. In the untrained individuals, exercise decreased the excretion of the kinins, kallikrein and sodium with urine but stimulated the blood kinins. In the athletes, on the other hand, exercise increased the excretion of kinins and kallidrein with urine but had no effect on sodium. The better condition the athlete was in, the more the renal kinin system was stimulated. However, the response of the athletes blood kinins to thephysical exertion was less pronounced than in the "intellectuals". Thus, regular trainingalters the blood and renal kinins. The state of these systems may be one of the humoral mechanisms responsible for the high hemodynamic adaptation capacity of well-conditioned athletes.

1/1

APPROVED FOR RELEASE: 09/17/2001 CIA-RDP86-00513R002202210010-1"

"APPROVED FOR RELEASE: 09/17/2001 CIA-RDP86-00513R002202210010-1

1/2 017 UNCLASSIFIED PROCESSING DATE--23OCT70

TITLE--CALLICREIN OF THE URINE AND SOME INDICES OF RENAL FUNCTION -U-

AUTHOR-(04)-NEKRASOVA, A.A., CHERNOVA, N.A., SHARAPOV, U.B., KOVALEVA, N.T.

COUNTRY OF INFO--USSR

SOURCE--UROLOGIYA I NEFROLOGIYA, 1970, NR 3, PP 12-16

DATE PUBLISHED-------70

SUBJECT AREAS--BIOLOGICAL AND MEDICAL SCIENCES

TOPIC TAGS--KIDNEY FUNCTION, BLOOD CIRCULATION, PANCREAS, HORMONE, ESTERASE, HYPERTENSION

CONTROL MARKING--NO RESTRICTIONS

DOCUMENT CLASS--UNCLASSIFIED

PROXY REEL/FRAME--1997/2056 STEP NO--UR/0606/70/000/003/0012/0016

CIRC ACCESSION NO--AP0120699

UNCLASSIFIED

APPROVED FOR RELEASE: 09/17/2001 CIA-RDP86-00513R002202210010-1"

"APPROVED FOR RELEASE: 09/17/2001 CIA-RDP86-00513R002202210010-1

UNCLASSIFIED PROCESSING DATE--23OCT7

2/2 017

CIRC ACCESSION NO--AP0120699

ABSTRACT/EXTRACT--(U) GP-0- ABSTRACT. A STUDY WAS MADE OF THE 24 HOUR EXCRETION OF CALLICREIN WITH THE URINE OF 33 HEALTHY PERSONS AND 68 PATIENTS SUFFERING FROM VARIOUS CIRCULATORY DISTURBANCES OF THE KIDNEYS CALLICREIN WAS ASSESSED BY DETERMINATION OF ITS ESTERASE ACTIVITY. THERE WAS FOUND A DIRECT RELATIONSHIP BETWEEN THE URINARY EXCRETION OF CALLICREIN AND THE EFFECTIVE RENAL BLOOD FLOW. CALLICREIN EXCRETION DI NOT DEPEND ON THE FILTRATION REABSORPTION FUNCTION. EXRETION OF CALLICREIN BY THE KIDNEYS WAS REDUCED IN CASES WITH CONSIDERABLE CHANGE OF THE RENOGRAM. IN RENOVASCULAR HYPERTENSION URINARY EXCRETION OF CALLICREIN FELL IN CASES OF BILATERAL STENOSIS OF THE RENAL ARTERIES WITHOUT ADEQUATE DEVELOPMENT OF COLLATERAL CIRCULATION AND ALSO IN UNILATERAL STENOSIS, BUT WITH DISTURBED FUNCTION OF CONTRALATERAL KIDNEY. IT WAS FOUND IN EXPERIMENT ON 20 RABBITS WITH RENOVASCULAR HYPERTENSION THAT ISCHEMIC KIDNEY CONSIDERABLY REDUCED THE SECRETION OF CALLICREIN, WHEREAS THE INTACT KIDNEY INCREASED ITS EXCRETION COMPENSATORILY. FACILITY: INST. KARDIOLOGII IM. A. L. MYASNIKOVA AMN SSSR, MOSCOW.

UNCLASSIFIED

APPROVED FOR RELEASE: 09/17/2001 CIA-RDP86-00513R002202210010-1"

"APPROVED FOR RELEASE: 09/17/2001 CIA-RDP86-00513R002202210010-1

USSR

UDC 632.95.024:635.13

IVANOVA, Ye. P., Kazakhsky Scientific Studies Institute of Potato and Vegetable Farming, NEKRASOVA, A. S., BAKANOV, Sh. A., and MAYOROVA, R. I., Kazakh Scientific Research Institute of Regional Pathology

"The Effectiveness of Prometrin Against Weeds on Carrot Seedlings and the Occurrence of Its Residues in the Crop and in the Plant"

Moscow, Khimiya v Sel'skom Khozyzystne, No 7, Vol 11, 1973, pp 61-63

Abstract: Prometrin -- 2-methylthio-4,6-bis(iscpropylamino)sym-triazine -- is one of the herbicides suggested for use on carrots in the Alma-Atinsky region. Under the conditions in this area, prometrin was singularly effective against annual monocotyledon and dicotyledon weeds. The amount of control for 3 years -- 1969 through 1971 -- is shown together with the meteorological conditions. Values for several indicators of plant productivity and vitality are shown for a control group and groups treated with 1.5 kg/hectare or 2.0 kg/hectare for 1969 and 1970. In doses of 1.5 kg/hectare it reduces the choking by 97.0% and the overall mass of weeds by 96.8%. No adverse effects on the seedlings or residue in the crop were observed for this dose. Residues were observed when higher doses (2.5 to 3.5 kg/hectare) were used.

1/1

APPROVED FOR RELEASE: 09/17/2001 CIA-RDP86-00513R002202210010-1"

"APPROVED FOR RELEASE: 09/17/2001 CIA-RDP86-00513R002202210010-1

1/2 027 UNCLASSIFIED PROCESSING DATE--30OCT70

TITLE--THERMOPHYSICAL PROPERTIES OF FILLED EBONITE MIXTURES BASED ON SKMS-50P -U-

AUTHOR-(05)-ZANEMONETS, N.A., YEGOROVA, S.A., NEKRASOVA, E.I., AGAYANTS, I.M., KOCHANOVA, O.M.

COUNTRY OF INFO--USSR

SOURCE--KAUCH. REZINA 1970, 29(2), 27-9

DATE PUBLISHED--------70

SUBJECT AREAS--MATERIALS, PHYSICS

TOPIC TAGS--FILLER, SYNTHETIC RUBBER, HEAT TRANSFER COEFFICIENT, HEAT CAPACITY, EBONITE, STYRENE/(U)SKMS50P SYNTHETIC RUBBER

CONTROL MARKING--NO RESTRICTIONS

DOCUMENT CLASS--UNCLASSIFIED

PROXY REEL/FRAME--1997/0457 STEP NO--UR/0138/70/029/002/0027/0029

CIRC ACCESSION NO--AP0119393

UNCLASSIFIED

APPROVED FOR RELEASE: 09/17/2001 CIA-RDP86-00513R002202210010-1"

"APPROVED FOR RELEASE: 09/17/2001 CIA-RDP86-00513R002202210010-1

UNCLASSIFIED PROCESSING DATE--30OCT70

2/2 027

CIRC ACCESSION NO--AP0119393

ABSTRACT/EXTRACT--(U) GP-0- ABSTRACT. THE HEAT COND. COEFFS. (LAMBDA IN KCAL-M-HR-DEGREESC). HEAT TRANSFER COEFFS. (A IN DEGREES M PRIME2-HR), AND VOL. HEAT CAPACITIES (C EQUALS LAMBDA-A) WERE DETD. FOR EBONITES MADE FROM SYNTHETIC RUBBER SKMS-50P FILLED WITH LESS THAN OR EQUAL TO 300 PARTS OF EBONITE POWDER, KEROGEN, CARBON POWDER, OR KAOLIN IN THE 30-170DEGREES RANGE. THE TEMP. HAD NO EFFECT ON LAMBDA AND A. THE INCREASE OF THE FILLER AMT. INCREASED LAMBDA AND A. TYPICALLY LAMBDA AND A OF THE UNFILLED EBONITE WERE, RESP., 0.181 AND 3.71 TIMES 10 NEGATIVE PRIME4., LAMBDA AND A OF THE EBONITES CONTG. 100 PARTS AND 300 PARTS CARBON POWDER WERE, RESP., 0.203, 4.24 TIMES 10 NEGATIVE PRIME4 AND 0.244, 4.74 TIMES 10 NEGATIVE PRIME4. THESE EBONITES CONFORMED TO THE PHONON THEORY OF HEAT TRANSFER AND THE EQUATION LAMBDA EQUALS CUL-3 (U IS THE AV. PHONON VELOCITY APPROXIMATELY EQUAL TO 2.5 TIMES 10 PRIME5 CM-SEC AND L IS THE AV. FREE PATH OF THE PHONON). FACILITY: MOSK. KHIM. TEKHNOL. INST. IM. LOMONOSOVA, MOSCOW, USSR.

UNCLASSIFIED

APPROVED FOR RELEASE: 09/17/2001 CIA-RDP86-00513R002202210010-1"

"APPROVED FOR RELEASE: 09/17/2001 CIA-RDP86-00513R002202210010-1

N

UDC 620.18:620.17:669.71'725

USSR

FRIDLYANDER, I. N., YATSENKO, K. P., NEKRASOVA, G. A., SANDLER, V. S., SEMENOVA, Z. G., and GULIN, A. N.

"Laws of Variation of the Structure and Properties of Beryllium-Aluminum Alloys"

Moscow, Metallovedeniye i Termicheskaya Obrabotka Metallov, No 7, 1970, pp 50-55

Abstract: This article contains a discussion of the laws of variation of the structure and properties of beryllium-aluminum hypereutectic alloys. Various amounts of magnesium were added to the alloy to produce various changes. By generalizing the results of x-ray micrography a diagram is constructed for the decomposition of a solid solution of aluminum-beryllium alloy with 30% Be and 5% Mg. The variation in mechanical properties of the same alloy is plotted for aging at 200°C and at 250°C. The strength of aluminum-berllium alloys as a function of the distance between the B-phase particles (the distance between the beryllium particles) is also plotted for Al-Be and Al-Be-Mg. The mechanisms of all these variations in structure and properties are discussed in detail.

1/1

APPROVED FOR RELEASE: 09/17/2001 CIA-RDP86-00513R002202210010-1"

"APPROVED FOR RELEASE: 09/17/2001 CIA-RDP86-00513R002202210010-1

UNCLASSIFIED PROCESSING DATE--02OCT70

1/2 014

TITLE--CONDENSATION OF 1,HYDROXPHTHALANS AND PHTHALYLIUM SALTS WITH PHENYLNITROMETHANE AND NITROACETONITRILE -U-

AUTHOR-(02)-NEKRASOVA, G.V., ORLOVA, A.N.

COUNTRY OF INFO--USSR

SOURCE--ZH. ORG. KHIM. 1970, 6(3) 600-6

DATE PUBLISHED--------70

SUBJECT AREAS--CHEMISTRY

TOPIC TAGS--BENZENE DERIVATIVE, NITROMETHANE, ACETONITRILE, CYANIDE, HYDROGEN BONDING, CONDENSATION REACTION

CONTROL MARKING--NO RESTRICTIONS

DOCUMENT CLASS--UNCLASSIFIED

PROXY REEL/FRAME--1992/1407 STEP NO--UR/0366/70/006/003/0600/0606

CIRC ACCESSION NO--AP0112401

UNCLASSIFIED

APPROVED FOR RELEASE: 09/17/2001 CIA-RDP86-00513R002202210010-1"

"APPROVED FOR RELEASE: 09/17/2001 CIA-RDP86-00513R002202210010-1

UNCLASSIFIED PROCESSING DATE--02OCT70

2/2 014

CIRC ACCESSION NO--AP0112401

ABSTRACT/EXTRACT--(U) GP-0- ABSTRACT. CONDENSATION OF PHCH SUB2 NO SUB2 OR NCCH SUB2 NO SUB2 WITH 1,(R SUBSTITUTED), 1,HYDROXY,3,3,DIMETHYL,1,PHENYLPHTHALAN (I) GAVE THE FOLLOWING 1,R,1,(CHR PRIME1 NO SUB2) DISUBSTITUTED 3,3,DIMETHYL,1,PHENYLPHTHALANS (II) (R, R PRIME1 GIVEN): PH, PH; P-MEC SUB6 H SUB4, PH; P-MEOC SUB6 H SUB4, PH; PH, CN; P-MEC SUB6 H SUB4, CN; AND P-MEOC SUB6 H SUB4, CN. THE REACTION OF I SALTS WITH PHCH SUB2 NO SUB2 OR NCCH SUB2 NO SUB2 ALSO GAVE II, INDICATING THAT BOTH THESE REACTIONS HAVE HETEROLYTIC CHARACTER. II CONTG. PH GROUPS HAVE MORE STABLE H BONDING THAN II CONTG. CN GROUPS.

UNCLASSIFIED

APPROVED FOR RELEASE: 09/17/2001 CIA-RDP86-00513R002202210010-1"

"APPROVED FOR RELEASE: 09/17/2001 CIA-RDP86-00513R002202210010-1

UNCLASSIFIED PROCESSING DATE--09OCT70

1/2 018

TITLE--REACTIONS OF POLYHALOGENANTHRAQUINONES WITH NUCLEOPHILES VII. REACTION OF 1, 2, 3, 4,TETRAFLUORUANTHRAQUINONE WITH DIETHYL, DIBUTYL,

AUTHOR-(03)-LOSKUTOV, V.A., NEKRASOVA, L.N., FOKIN, YE.P.

COUNTRY OF INFO--USSR

SOURCE--IZVESTIYA SIBIRSKOGO OTDELENIYA AKADEMII NAUK SSR, NO 4, SERIYA KHIMICHESKIKH NAUK, 1970, NR 2, PP 119-124

DATE PUBLISHED--------70

SUBJECT AREAS--CHEMISTRY

TOPIC TAGS--FLUORINATED ORGANIC COMPOUND, ANTHRAQUINONE, ALIPHATIC AMINE, AROMATIC AMINE, CHEMICAL REACTION

CONTROL MARKING--NO RESTRICTIONS

DOCUMENT CLASS--UNCLASSIFIED

PROXY REEL/FRAME--1992/1868 STEP NO--UR/0289/70/000/000/0119/0124

CIRC ACCESSION NO--AP0112848

UNCLASSIFIED

APPROVED FOR RELEASE: 09/17/2001 CIA-RDP86-00513R002202210010-1"

"APPROVED FOR RELEASE: 09/17/2001 CIA-RDP86-00513R002202210010-1

2/2 018 UNCLASSIFIED PROCESSING DATE--09OCT70

CIRC ACCESSION NO--AP0112848

ABSTRACT/EXTRACT--(U) GP-0- ABSTRACT. 1, 2, 3, 4,TETRAFLUOROANTHRAQUINONE REACTS WITH DIETHYL, DIBUTYL, DIISOBUTYL, AND DIBENZYLAMINES IN BENZENE TO GIVE THE CORRESPONDING 1,(N,DIALKYLAMINO), 2, 3, 4,TRIFLUOROANTHRAQUINONES WITH YIELD 70-80PERCENT. IN DIMETHYL SULFOXIDE DIETHYL AND DIBUTYLAMINES FORM WITH 1, 2, 3, 4,TETRAFLUOROANTHRAQUINONE 2,(N,DIALKYLAMINO),1, 2, 3, 4,TRIFLUOROANTHRAQUINONES AND DIISOBUTYL AND DIBENZYLAMINES, THE CORRESPONDING 1,ISOMERS. THE FUNDAMENTAL PRODUCT OF THE REACTION OF 1,DIETHYL (DIBUTYL, DIISOBUTYL) AMINO,2, 3, 4,TRIFLUOROANTHRAQUINONES WITH DIETHYL DIBUTYL, DIISOBUTYLAMINES IS 1, 4,BIS (N,DIALKYLAMINO),2, 3,DIFLUOROANTHRAQUINONES BOTH IN BENZENE AND DIMETHYL SULFOXIDE.

FACILITY: NOVOSIBIRSK INSTITUT ORGANICHESKOY KHIMII SO AN SSSR.

UNCLASSIFIED

APPROVED FOR RELEASE: 09/17/2001 CIA-RDP86-00513R002202210010-1"

"APPROVED FOR RELEASE: 09/17/2001 CIA-RDP86-00513R002202210010-1

UNCLASSIFIED PROCESSING DATE--30OCT70

1/3 011

TITLE--REACTION OF 1,3,DIOXOLANES WITH ACETYLENE UNDER IOTSICH REACTION CONDITIONS -U-

AUTHOR-(05)-SHOSTAKOVSKIY, M.F., ATAVIN, A.S., TROFIMOV, B.A., KOROSTOVA, YE.S., NEKRASOVA, L.P.

COUNTRY OF INFO--USSR

SOURCE--IZV. AKAD. NAUK SSSR, SER. KHIM. 1970, (3), 668-73

DATE PUBLISHED----------70

SUBJECT AREAS--CHEMISTRY

TOPIC TAGS--COMPLEX COMPOUND, ACETYLENE, HYDROXYL RADICAL, ETHER, DIOXANE, CYCLIZATION, CYCLOHEXANE, CHEMICAL REACTION TEMPERATURE

CONTROL MARKING--NO RESTRICTIONS

DOCUMENT CLASS--UNCLASSIFIED

PROXY REEL/FRAME--1999/1762 STEP NO--UR/0062/70/000/003/0668/0673

CIRC ACCESSION NO--AP0123562

UNCLASSIFIED

APPROVED FOR RELEASE: 09/17/2001 CIA-RDP86-00513R002202210010-1"

"APPROVED FOR RELEASE: 09/17/2001 CIA-RDP86-00513R002202210010-1

2/3 011 UNCLASSIFIED PROCESSING DATE--30OCT70

IRC ACCESSION NO--AP0123562

BSTRACT/EXTRACT--(U) GP-0- ABSTRACT. 1,3,DIOXOLANES REACT AT 80-120DEGREES WITH THE LOTSICH COMPLEX OF C SUB2 H SUB2 AND GIVE LOW YIELDS OF HYDROXYETHYL ETHERS OF ACETYLENIC HC COMPDS. FROM IR DATA IT WAS EVIDENT THAT IN A NO. OF CASES CYCLIZATION TO 1,4,DIOXANE DERIVS. TOOK PLACE. 2,METHYL,1,3,DIOXOLANE (9 ML) AND REACTION PRODUCT OF ETMGBR AND C SUB2 H SUB2 (FROM 4.8 G MG) GAVE AFTER 3 HR, ON A STEAM BATH IN MEPH 16.7PERCENT 3,METHYL,3,(2,HYDROXYETHYL),1,PROPYNE, B SUB24 68-71DEGREES; A SIMILAR REACTION IN WHICH THE ORIGINAL COMPLEX WAS PREPD. AT 37-50DEGREES AND THE REACTION WAS RUN IN A STREAM OF C SUB2 H SUB2 2 HR AT REFLUX GAVE SEC-BU CELLOSOLVE, B SUB19 60-3DEGREES. WHEN THE ABOVE REACTION WAS RUN IN THF THERE WAS FORMED AFTER 3 HR AT 120DEGREES CRUDE HC TRIPLE BOND CCHMEOCH SUB2 CH SUB2 OH, B SUB19 50-62DEGREES. 2,METHYL,2,ETHYL,1,3,DIOXOLANE IN A SIMILAR REACTION BOMPLETED BY HEATING 3 HR AT 120DEGREES GAVE 18.2PERCENT 3,METHYL,3,ETHYL,3,(2,HYDROXYETHYL),1,PROPYNE, B SUB15 82-5DEGREES, CONTG. IMPURITIES, ALONG WITH 8.9PERCENT 3,6,DIMETHYL,3,6,BIS(2,HYDROXY,ETHYL),4,OCTYNE, B SUB1 118-20DEGREES. WHEN THE REACTICN WAS RUN IN A CONTINUED STREAM OF C SUB2 H SUB2, FINALLY AT 80DEGREES, IT GAVE 19PERCENT 2,METHYL,2,ETHYL,3,METHYLENE,1,4,DIOXOLANE MIXED WITH MEET SUB2 COCH SUB2 CH SUB2 OH, B SUB3 50-5DEGREES, WHILE THE REACTION RUN 3 HR AT 0-5DEGREES, THE 3 HR AT 100DEGREES IN MEPH GAVE MAINLY THE LAST ETHER (IMPURE).

APPROVED FOR RELEASE: 09/17/2001 CIA-RDP86-00513R002202210010-1"

"APPROVED FOR RELEASE: 09/17/2001 CIA-RDP86-00513R002202210010-1

3/3 011 UNCLASSIFIED PROCESSING DATE--30OCT70

CIRC ACCESSION NO--AP0123562

ABSTRACT/EXTRACT--PASSING C SUB2 H SUB2 5 HR INTO ETMGBR IN ET SUB2 O AND TREATING THE MIXT. WITH 0.5 MOLE SPIRO(4.4)1,4,DIOXONONANE IN MEPH GAVE AFTER 3 HR AT 60-95DEGREES 18.2PERCENT MIXED 1,ETHYL,1,(2,HYDROXYETHOXY)CYCLOPENTANE AND HOCH SUB2 CH SUB2 OCET(C SUB5 H SUB10-CYCLO) SUB2, B SUB1 60-3DEGREES, AS WELL AS SOME BIS(1,(2,HYDROXYETHOXY),1,CYCLOPENTYNYL)ACETYLENE, B SUB1 140-53DEGREES. SIMILARLY SPIRO(4.5),1,4,DIOXODECANE GAVE 1,ETHYL,1,(2,HYDROXY,ETHOXY)CYCLOHEXANE CONTG. 1,ETHYNYL,1,(2,HYDROXYETHOXY)CYCLOHEXANE, B SUB3 89-90DEGREES; REACTION RUN AT LOWER TEMP. ALSO GAVE THE LATTER PRODUCTS. FACILITY: IRKUTSK. INST. ORG. KHIM., IRKUTSK, USSR.

UNCLASSIFIED

APPROVED FOR RELEASE: 09/17/2001 CIA-RDP86-00513R002202210010-1"

"APPROVED FOR RELEASE: 09/17/2001 CIA-RDP86-00513R002202210010-1

1/2 017 UNCLASSIFIED PROCESSING DATE--09OCT70

TITLE--LOW TEMPERATURE DECARBURIZATION OF TRANSFORMER STEEL -U-

AUTHOR-(05)-NEKRASOVA, M.I., TIPIKINA, L.N., SOKOLOV, B.K., KOROBKA, B.A., ZYKOV, G.A.

COUNTRY OF INFO--USSR

N

SOURCE--IZV. AKAD. NAUK SSSR, SER. FIZ. 1970, 34(2), 317-21

DATE PUBLISHED--------70

SUBJECT AREAS--MATERIALS

TOPIC TAGS--TRANSFORMER STEEL, METAL DECARBURIZATION, SILICON STEEL, NITROGEN, OXYGEN

CONTROL MARKING--NO RESTRICTIONS

DOCUMENT CLASS--UNCLASSIFIED

PROXY REEL/FRAME--1995/0193 STEP NO--UR/0048/70/034/002/0317/0321

CIRC ACCESSION NO--AP0115897

UNCLASSIFIED

APPROVED FOR RELEASE: 09/17/2001 CIA-RDP86-00513R002202210010-1"

"APPROVED FOR RELEASE: 09/17/2001 CIA-RDP86-00513R002202210010-1

UNCLASSIFIED PROCESSING DATE--09OCT70

2/2 017

CIRC ACCESSION NO--AP0115897

ABSTRACT/EXTRACT--(U) GP-0- ABSTRACT. DECARBURIZATION OF TRANSFORMER STEEL CONTG. 3.4PERCENT SI AND A MIXT. OF N, H, AND WATER VAPOR IN VARIOUS PROPORTIONS WAS INVESTIGATED. THE GAS WAS O PURIFIED TO 0.001PERCENT, AND DRIED TO A DEW POINT OF MINUS 40 TO MINUS 50DEGREES. DECARBURIZATION WAS STUDIED AT 650-1050DEGREES, AND AT RATIOS (H SUB2 O)-(H SUB2) EQUALS 0.2, 0.4, 0.6. THE DRY GAS CONTAINED 20PERCENT H SUB2. THE INITIAL C CONTENT IN THE METAL WAS 0.020-0.025PERCENT, AND THE HOLDING TIME IN THE ATM. WAS 5 MIN. THE BEST DECARBURIZATION RESULTS WERE OBTAINED AT 800-50DEGREES, AND AT (H SUB2 O)-(H SUB2) VALUES OF 0.4 AND 0.6. THE RATE OF DECARBURIZATION WAS DETD. AT 850DEGREES AND AT (H SUB2 O)-(H SUB2) EQUALS 0.5. THE METAL, 0.35 MM THICK, AND WITH 0.020-0.025PERCENT OF ITS INITIAL C CONTENT, WAS DECARBURIZED DURING 5 MIN TO A VALUE LESS THAN 0.005PERCENT, AND WITH 0.045-0.055PERCENT OF THE INITIAL C CONTENT TO THE SAME VALUE, BUT DURING 7 MIN. FACILITY: VERKH-ISETSKII MET. ZAVOD, USSR.

UNCLASSIFIED

APPROVED FOR RELEASE: 09/17/2001 CIA-RDP86-00513R002202210010-1"

"APPROVED FOR RELEASE: 09/17/2001 CIA-RDP86-00513R002202210010-1

UNCLASSIFIED

1/2 019 PROCESSING DATE--04DEC70

TITLE--INFLUENCE OF THE SOLVATION OF GROWING CHAINS ON THE MICROTACTICITY OF THE RESULTING POLYMER -U-

AUTHOR-(04)-OSADA, YE., NEKRASOVA, N.A., PAPISOV, I.M., KABANOV, V.A.

COUNTRY OF INFO--USSR

SOURCE--VYSOKOMOL. SOEDIN., SER. B 1970, 12(5), 324-5

DATE PUBLISHED--------70

SUBJECT AREAS--CHEMISTRY

TOPIC TAGS--SOLVENT ACTION, NMR SPECTRUM, POLYMERIZATION, METHACRYLIC ACID, METHYL ETHER, ETHYLENE GLYCOL, METHOXY COMPOUND

CONTROL MARKING--NO RESTRICTIONS

DOCUMENT CLASS--UNCLASSIFIED

PROXY REEL/FRAME--3007/0724 STEP NO--UR/0460/70/012/005/0324/0325

CIRC ACCESSION NO--AP0136163

UNCLASSIFIED

APPROVED FOR RELEASE: 09/17/2001 CIA-RDP86-00513R002202210010-1"

"APPROVED FOR RELEASE: 09/17/2001 CIA-RDP86-00513R002202210010-1

2/2 019 UNCLASSIFIED PROCESSING DATE--04DEC70

CIRC ACCESSION NO--AP0136163

ABSTRACT/EXTRACT--(U) GP-0- ABSTRACT. NMR SPECTRA SHOWED THAT POLYMN. OF METHACRYLIC ACID (I) IN C SUB6 H SUB6 IN THE PRESENCE OF MEOCH SUB2 CH SUB2 OME (II) AND POLYETHYLENE GLYCOL (III) CAUSED A DISCONTINUITY IN THE MICROTACTICITY OF THE POLY(METHACRYLIC ACID) FORMED, PRESUMABLY DUE TO A SOLVATION OF I MACRORADICALS WITH II OR III.

UNCLASSIFIED

APPROVED FOR RELEASE: 09/17/2001 CIA-RDP86-00513R002202210010-1"

"APPROVED FOR RELEASE: 09/17/2001 CIA-RDP86-00513R002202210010-1

USSR UDC: 621.319.4

KHALYAPINA, Ye. A., NEKRASOVA, N. M.

"A Working Electrolyte for Aluminum Electrolytic Capacitors"

Moscow, Otkrytiya, izobreteniya, promyshlennyye obraztsy, tovarnyye znaki, No 16, Jun 71, Author's Certificate No 303662, Division H, filed 11 Oct 69, published 13 May 71, p 187

Translation: This Author's Certificate introduces a working electrolyte for aluminum electrolytic capacitors. The electrolyte is based on ethylene glycol, boric acid, adipic acid and ammonia. As a distinguishing feature of the patent, in order to stabilize the electric parameters and internal pressure of the capacitors during long-term operation, phosphoric acid is added to the electrolyte with the following ratio of components (in parts by weight): ethylene glycol--10-120, boric acid--1-10, adipic acid--1-10, ammonia--2-10, phosphoric acid--1-2.

1/1

APPROVED FOR RELEASE: 09/17/2001 CIA-RDP86-00513R002202210010-1"

"APPROVED FOR RELEASE: 09/17/2001 CIA-RDP86-00513R002202210010-1

UNCLASSIFIED PROCESSING DATE--11DEC70

1/2 022

TITLE--SIMPLIFIED METHOD FOR ISOLATING CLOSTRIDIUM PERFRINGENS -U-

AUTHOR-(03)-MININA, R.S., GORODETSKAYA, I.A., NEKRASOVA, N.M.

COUNTRY OF INFO--USSR

SOURCE--VETERINARIYA, 1970, NR 5, P 107

DATE PUBLISHED--------70

SUBJECT AREAS--BIOLOGICAL AND MEDICAL SCIENCES

TOPIC TAGS--CLOSTRIDIUM PERFRINGENS, CULTURE MEDIUM, CULTURE METHOD, DYSENTERY

CONTROL MARKING--NO RESTRICTIONS

DOCUMENT CLASS--UNCLASSIFIED

PROXY FICHE NO----FD70/605049/D12 STEP NO--UR/0346/70/000/005/0107/0107

STAC ACCESSION NO--AP0143380 UNCLASSIFIED

APPROVED FOR RELEASE: 09/17/2001 CIA-RDP86-00513R002202210010-1"

"APPROVED FOR RELEASE: 09/17/2001 CIA-RDP86-00513R002202210010-1

UNCLASSIFIED PROCESSING DATE--11DEC70

2/2 022

CIRC ACCESSION NO--AP0143380

ABSTRACT/EXTRACT--(U) GP-0- ABSTRACT. AN IMPROVED METHOD OF ISOLATING CL. PERFRINGENS TYPES B, C, AND D, AGENTS OF INFECTIOUS ENTEROTOXEMIA AND ANAEROBIC DYSENTERY, CONSISTS OF SOWING PATHOLOGICAL MATERIAL FROM DEAC SHEEP CN KITT TAKOTSTSI MEDIUM (A MODIFIED MEAT PEPTONE BROTH), HEATED AND SATURATED WITH GLUCOSE. AFTER HEATING AT 65 C FOR 10 MIN AND INCUBATION FOR 18-24 HRS, PURE CULTURES WERE USED FOR BIOASSAY ON GUINEA PIGS IN THE NEUTRALIZATION TEST WITH ANTITOXIC SERA. PURE CULTURES WERE ISOLATED IN 90-95PERCENT OF CASES. A TOTAL OF 970 TESTS CONDUCTED BETWEEN 1961 AND 1968 RESULTED IN 143 POSITIVES FOR ENTEROTOXEMIA, DYSENTERY AND BRAXY. FACILITY: KIRGIZSKAYA RESPUBLIKANSKAYA VETERINARNAYA LABORATORIYA, KIRGIZ REPUBLIC VETERIANRY LABORATORY.

UNCLASSIFIED

APPROVED FOR RELEASE: 09/17/2001 CIA-RDP86-00513R002202210010-1"

"APPROVED FOR RELEASE: 09/17/2001 CIA-RDP86-00513R002202210010-1

Acc. Nr. AP0055644 Abstracting Service: CHEMICAL ABST. 6-70 N Ref. Code UR0460

111878y **Stereospecific polymerization of trimethylsilyl methacrylate by butyllithium.** Andreev, D. N.; Krasulina, V. N.; Mikhailova, N. V.; Nekrasova, T. I.; Novoselova, A. V.; Smirnova, G. S. (Inst. Vysokomol. Soedin., Leningrad, USSR). *Vysokomol. Soedin., Ser. B* 1970, 12(2), 123-6 (Russ). The polymn. of $H_2C{:}CMeCO_2SiMe_3$ (I) in the presence of BuLi gave 90-100% of the corresponding polymer (II), which is extremely hygroscopic and is hydrolyzed by air moisture. Ir and NMR spectroscopy of poly(methacrylic acid) (III), obtained by the mild hydrolysis of II, showed that ≤65% of all segments are isotactic. The polymn. of I is recommended as a convenient method for the prepn. of isotactic III. CPJR

Y1

REEL/FRAME 19840946

7 CB

APPROVED FOR RELEASE: 09/17/2001 CIA-RDP86-00513R002202210010-1"

"APPROVED FOR RELEASE: 09/17/2001 CIA-RDP86-00513R002202210010-1

T.N. NEKRASOVA

Acc. Nr: AP0044384 Ref. Code: UR 0463

PRIMARY SOURCE: Molekulyarnaya Biologiya, 1970, Vol 4, Nr 1, pp 118-128

INVESTIGATION OF HISTONE STRUCTURE

Ramm, Ye. I.; Birshteyn, T. M.; Bolotina, I. A.; Vorob'yev, V. I.; Dmitrenko, L. V.; Nekrasova, T. N.; Vol'kenshteyn, M. V.

Institute of Cytology and Institute of High-Molecular Weight Compounds, Academy of Sciences, USSR, Leningrad and Institute of Molecular Biology, Academy of Sciences, USSR, Moscow

The structure of four histone fractions (f_1, f_2 (a), f_2 (b), f_3) has been studied by the methods of optical rotatory dispertion, potentiometric titration and viscometry. The analysis of the data obtained made it possible to draw a conclusion that histones are not globular proteins. The dependence of reduced viscosity on the charge of the molecule and the ionic strength of the solution showed that the dimensions of the histone molecules depend to a large extent upon the forces of electrostatic interaction. This suggests that the histone molecules are conformationally flexible and probably exhibit the conformation of a statistical coil with the incorporation of helical regions.

1/2 02

REEL/FRAME
19771000

APPROVED FOR RELEASE: 09/17/2001 CIA-RDP86-00513R002202210010-1"

"APPROVED FOR RELEASE: 09/17/2001 CIA-RDP86-00513R002202210010-1

AP0044384

The potentiometric titration curves have been obtained for all the histone fractions and have been used for calculating the number of ionizable groups, for determining their pK' and the change in the mean overall charge of the molecules with the pH alteration of the medium. The effect of pH and the ionic strength of the solution on the α-helix content of various histone fractions was studied. The data obtained were compared and a conclusion was drawn about the non-uniform distribution of the charged groups in the histone molecules. On one hand, histones contain at neutral pH coil shaped sequences enriched with basic amino acid residues with high density of the positive charge and on the other hand, regions capable to form helical structures and containing both acid and basic amino acid residues. A model is proposed describing the structure of histones.

The important differences between histone fractions were shown to exist mainly due to the distribution of the charges along the chain.

19771001

2/2

APPROVED FOR RELEASE: 09/17/2001 CIA-RDP86-00513R002202210010-1"

"APPROVED FOR RELEASE: 09/17/2001 CIA-RDP86-00513R002202210010-1

NEKRASOVA, V. N.

SO: JPRS 55100
4 FEB 72

UDC 629.78.048:582.998.4.057

CHANGE IN GROWTH PROCESSES IN IRRADIATED LETTUCE SEEDS

/Article by Yu. I. Shavdorov, A. T. Miller, ~~I. V. Nikiforov~~, L. V. Alekseyenko, A. O. Krustyn' and V. N. Nekrasova, Moscow, Kosmicheskaya Biologiya i Meditsina, Russian, Vol 5, No 6, 1971, submitted for publication 25 June 1971, pp 21-26/

Abstract: The effect of spaceflight factors on the biological effectiveness of γ-rays was studied with respect to lettuce seeds. It was found that the flight exerted no significant effect on the energy of seed germination. The length of the primary root in flight specimens irradiated before flight was similar to that in the ground controls. According to this test, flight factors increased the effectiveness of postflight irradiation insignificantly. The influence of a synchronous exposure inhibited the weight of 30-day plants to the greatest extent. The seed exposure to all the doses tested during the flight resulted in a slight decline of plant weight in comparison with the laboratory control.

We studied the influence of flight factors and ionizing radiation on initial growth processes (sprouting energy and germination of seeds, growth of the primary root), and also on the appearance of aftereffects of the studied phenomena in growing plants. The experimental plan provided for a clarification of the influence of flight factors on the appearance of a radiobiological effect (seed irradiation prior to flight) and the radiosensitivity of seeds (seed irradiation after flight). As is well known, the radiation effect on dry seeds begins to appear with the onset of their germination. At that time one observes both the realization of the damage and the oppositely directed processes associated with a normalization of plant growth mechanisms. During the initial growth period the damaging effect of radiation is most clearly manifested. With an increase in plant age recovery processes begin to predominate and in the case of small irradiation doses the radiation effect can be smoothed out.

APPROVED FOR RELEASE: 09/17/2001 CIA-RDP86-00513R002202210010-1"

"APPROVED FOR RELEASE: 09/17/2001 CIA-RDP86-00513R002202210010-1

NEKRASOVA, V. N.

Radiation Biology

So. JPRS 54768
22 DEC 71

UDC 635.34:58.035.039

EFFECT OF ILLUMINATION ON THE RADIATION EFFECT IN LEAF CABBAGE AFTER IRRADIATION BY PROTONS AND GAMMA RAYS

[Article by I. S. Skukina, Yu. I. Shaydorov and V. N. Nekrasova, Moscow, Kosmicheskaya Biologiya i Meditsina, Russian, Vol 5, No 5, 1971, submitted for publication 1 February 1971, pp 84-87]

Illumination conditions (light intensity, its spectral composition, duration of light and darkness) in many respects determine the interrelationship of biochemical processes transpiring in the plant organism (Zh. L. Roktanen; E. A. Titlyanov, et al.; N. P. Voskresenskaya), and also its reaction to external stimuli. In particular, this factor plays more than a little role in the nature of plant response to radiation. Accordingly, by creating appropriate illumination conditions it is possible to change the direction of physiological and biochemical processes in a plant in such a way as to increase their radiation tolerance and capacity for recovery.

For example, according to data published by V. N. Savin (1962), the cultivation of tomato plants from irradiated seeds with an illumination of 50,000 lux leads to an attenuation of the radiation effect in comparison with an illumination of 10,000 lux. A similar phenomenon was observed during the cultivation of radish plants from irradiated seeds (N. F. Batygin and V. N. Savin). At the same time, different illumination during the pre-radiation period (3,000-5,000 and 30,000 lux) exerted no influence on radiation effectiveness (N. F. Batygin and L. A. Misyuk). A shortening of the light period from 12 to 6 and 8 hours during the cultivation of perilla plants under luminescent lamps resulted in an increase in the effectiveness of gamma radiation (V. N. Savin, 1964). We found no data in the literature on the influence of illumination on the effectiveness of protons.

Since ionizing radiation constitutes the greatest danger for plants on space vehicles, it appears desirable to study different plant illumination conditions as a possible radioprotective factor.

APPROVED FOR RELEASE: 09/17/2001 CIA-RDP86-00513R002202210010-1"

"APPROVED FOR RELEASE: 09/17/2001 CIA-RDP86-00513R002202210010-1

1/2 027 UNCLASSIFIED PROCESSING DATE--11SEP70

TITLE--KINETICS OF THE PARTIAL OXIDATION OF NATURAL GAS BY A SMALL QUANTITY OF WATER VAPOR -U-

AUTHOR--NEKRICH, YE.M.

COUNTRY OF INFO--USSR

SOURCE--ZH. PRIKL. KHIM. (LENINGRAD) 1970, 43(2), 366-72

DATE PUBLISHED--------70

SUBJECT AREAS--EARTH SCIENCES AND OCEANOGRAPHY

TOPIC TAGS--ACTIVATION ENERGY, NATURAL GAS, CHEMICAL REACTION KINETICS, OXIDATION, METAL CATALYST, NICKEL

CONTROL MARKING--NO RESTRICTIONS

DOCUMENT CLASS--UNCLASSIFIED

PROXY REEL/FRAME--1990/2037 STEP NO--UR/0080/70/043/002/0366/0372

CIRC ACCESSION NO--AP0109969

UNCLASSIFIED

APPROVED FOR RELEASE: 09/17/2001 CIA-RDP86-00513R002202210010-1"

"APPROVED FOR RELEASE: 09/17/2001 CIA-RDP86-00513R002202210010-1

2/2 027 UNCLASSIFIED PROCESSING DATE--11SEP70

CIRC ACCESSION NO--AP0109969

ABSTRACT/EXTRACT--(U) GP-0- ABSTRACT. THE STEAM REFORMING OF NATURAL GAS (CH SUB4 92.58, C SUB2 H SUB6 4.21, C SUB3 H SUB8 0.9, C SUB4 H SUB10 0.33, C SUB5 H SUB12 0.18, C SUB6 H SUB14 AND HIGHER 0.23, N AND INERT GASES 1.38, AND CO SUB2 0.14 VOL. PERCENT) WAS STUDIED IN A LAB. FLOW THROUGH APP. AT 1 ATM., 1000-300DEGREESK, VOL. SPACE VELOCITY 500-2000 HR PRIME NEGATIVE1, CONTACT TIME 0.01-0.1 SEC, AND H SUB2 O EXCESS 1.2-1.5. A COM. NI CATALYST (GRAIN SIZE 1.0-1.5 MM) WAS USED. FRESH CATALYST WAS REDUCED WITH H AT 400-700DEGREESC FOR 2-3 HR. THE AMT. OF CATALYST IN THE QUARTZ REACTOR WAS 2.5-10CM PRIME3. AT 1100-200DEGREESK AND SIMILAR TO 0.09 SEC CONTACT TIME, THE CONTENT OF H PLUS CO IN THE PRODUCTS EXCEEDED 90PERCENT. THE RATE CONST. FOLLOWED THE ARRHENIUS EQUATION: K EQUALS 0.72 TIMES 10 PRIME7 EXP(NEGATIVE E-RT), WHERE K IS THE RATE CONST. IN SEC PRIME NEGATIVE1, R IS THE GAS CONST., T IS TEMP. IN DEGREESK, AND E IS THE ENERGY OF ACTIVATION IN CAL-MOLE. THE CALCD. ENERGY OF ACTIVATION IS 18.0 KCAL-MOLE.

ZZZZZZZZZZZZ UNCLASSIFIED

APPROVED FOR RELEASE: 09/17/2001 CIA-RDP86-00513R002202210010-1"

"APPROVED FOR RELEASE: 09/17/2001 CIA-RDP86-00513R002202210010-1

USSR UDC 541.183.5

GOROKHOVATSKAYA, N. V., NEKRYACH, YE. F., and KURILENKO, O. D., Institute of Colloidal Chemistry and Chemistry of Water, Ukrainian Academy of Sciences

"Sorption of Water Vapor by the Strong-Acidic Cationite KU-5"

Kiev, Ukrainskiy Khimicheskiy Zhurnal, Vol XXXVII, No 8, 71, pp 785-789

Abstract: Hydration of the KU-5 sulfocationite, apart from immediate practical importance, is of definite theoretical interest. Comparison of the sorption properties of corresponding saline forms of KU-5 and KU-2 having the same fixated ions ($-SO_3H$) but different matrices will evidently show the effect which chemical structure of the skeleton and certain physico-chemical parameters of the ionite have on interaction between water molecules and active centers of the ionite.

The K^+, Na^+, Li^+, Ca^{2+}, Mg^{2+} and Al^{3+} forms of commerical KU-5 were tested, completeness of substitution being judged by the Al^{3+} form (analytical determination of amount of Al in the initial solution and following passage through the resin).

Water-vapor isotherms for KU-5 were similar in shape to those of other high-hydrophylic substances (initial sharp rise followed by more moderate rise

1/2

APPROVED FOR RELEASE: 09/17/2001 CIA-RDP86-00513R002202210010-1"

"APPROVED FOR RELEASE: 09/17/2001 CIA-RDP86-00513R002202210010-1

USSR

GOROKHOVATSKAYA, N. V., et al., Ukrainskiy Khimicheskiy Zhurnal, Vol XXXVII, No 8, 1971, pp 785-789

and final sharp rise). Evidently a monolayer of adsorbed water molecules is first formed at the most active centers, followed by hydration of less active centers and finally by capillary condensation of the vapor, accompanied by swelling of the ionite. Graphic representations of data obtained are included.

2/2

APPROVED FOR RELEASE: 09/17/2001 CIA-RDP86-00513R002202210010-1"

"APPROVED FOR RELEASE: 09/17/2001 CIA-RDP86-00513R002202210010-1

Ion Exchange

USSR UDC 536.664 + 541.183.12

NEKRYACH, YE. F., GOROKHOVATSKAYA, N. V., SAMCHENKO, Z. A., and KURYLENKO, O. D., Institute of Colloidal Chemistry and Chemistry of Water, Academy of Sciences, UkrSSR

"Hydration Thermodynamics of a Strong Acidic Cation Exchange Resin KU-5"

Kiev, Ukrainskiy Khimicheskiy Zhurnal, Vol 38, No 10, Oct 71, pp 1013-1017

Abstract: Results of sorption-thermochemical determinations and analysis of thermodynamical functions of water adsorbed by the cation exchange resin KU-5 are reported. The K^+, Na^+, Li^+, Ca^{2+}, Mg^{2+}, and Al^{3+} forms of the resin were studied and the data were calculated from sorption and thermochemical determinations carried out at 20°. It has been established that the graphs of function magnitudes related to the quantity of the adsorbed water reflect the hydration process laws which are connected with the nature of fixed and exchange ions. Analogously to other investigated cation exchange resins, the most informative are the functions $E_G = f(x)$; from them it is possible to get qualitative estimates on the input of various types of interactions to the total hydration energy.

1/1

APPROVED FOR RELEASE: 09/17/2001 CIA-RDP86-00513R002202210010-1"

"APPROVED FOR RELEASE: 09/17/2001 CIA-RDP86-00513R002202210010-1

USSR UDC 536.664+541.183.12

NEKRYACH, YE. F., GOROKHOVATSKAYA, N. V., SAMCHENKO, Z. A., KURILENKO, O. D.

"Sorption-Thermochemical Study of Hydration of Macroporous KU-23 Sulfocation Exchange Resin"

Kiev, Ukrainskiy Khimicheskiy Zhurnal, Vol XXXVIII, No 6, 1972, pp 581-586

Abstract: The sorption and thermochemical methods were used to study the hydration of macroporous KU-23 sulfocation exchange resin in hydride and four salt forms (Li^+, Na^+, K^+, Ca^{2+}). The thermodynamic functions of the sorbed water were defined on the basis of the data obtained, and study was made of the nature of their variation during the hydration process. On the graphs of the differential entropy, there are three sections corresponding to different hydration mechanisms. The results of the studies are compared with data obtained earlier for the KU-cation exchange resin.

A study was made of the 20° isotherms of the sorption of water vapor taken on a vacuum sorption device with spring-quartz scales, the heats of wetting by water defined in an adiabatic calorimeter and the thermodynamic functions of the water sorbed by the ion forms of the macroporous KU-23 sulfocation exchange resin. The procedure for preparing and performing the measurements was described previously [M. Dubinin, et al., Fiziko-khimicheskiye osnovy protivogazovogo dela, Moscow, 1939; A. V. Dumanskiy, et al., Ukr. khim. zh., No 26, 389, 1960].

1/1

APPROVED FOR RELEASE: 09/17/2001 CIA-RDP86-00513R002202210010-1"

"APPROVED FOR RELEASE: 09/17/2001 CIA-RDP86-00513R002202210010-1

USSR UDC 533.9.07

YEL'YASHEVICH, M. A., Academician of the Belorussian SSR Academy of Sciences, LABUDA, A. A., MIN'KO, L. YA., NEKTRASHEVICH, I. G., NOVIK, G. M., BAKANOVICH, G. I., Belorussian State University imeni V. I. Lenin, Physics Institute of the Belorussian SSR Academy of Sciences

"Generation of High-Speed Plasma Fluxes by a Pulse Accelerator on the Basis of the Phenomenon of Electric Detonation of Conductors and Dielectric Erosion"

Minsk, Doklady Akademii Nauk BSSR, Vol XVI, No 2, 1972, pp 115-117

Abstract: A study was made of a pulse generator of a moving plasma created by electric detonation of conductors of defined form in a bounded volume. The described plasma generator can operate in two versions -- on the basis of electric detonation of conductors as a source of a metal plasma or using pulse surface discharge where the plasma is formed as a result of erosion of the walls of the discharge chamber and the electrodes. The described pulse plasma generator permits the creation of incompletely expanded supersonic erosion plasma jets at atmospheric pressure with given gas dynamic characteristics determined by the discharge conditions and parameters.

Utilization of the phenomenon of electric detonation of conductors of a defined form under conditions of operating the plasma generator with an

APPROVED FOR RELEASE: 09/17/2001 CIA-RDP86-00513R002202210010-1"

"APPROVED FOR RELEASE: 09/17/2001 CIA-RDP86-00513R002202210010-1

USSR

YEL'YASHEVICH, M. A., et al., Doklady Akademii Nauk BSSR, Vol XVI, No 2, 1972, pp 115-117

auxiliary gap introduced into the discharge chamber permitted flows of a low-temperature metal plasma of any given chemical composition to be obtained with relatively high efficiency of utilization of the stored initial energy. The energy in the discharge gap for V = 4 kilovolts and C = 200 microfarads (mode I) was calculated from the current and voltage oscillograms as 1.3 kilojoules with an initial energy of 1.6 kilojoules. This essentially exceeds the energy contributed in the case of operating the generator with an external auxiliary gap (0.5 kilojoules). Optimization of the discharge conditions and the geometry of the discharge chamber and, consequently, the detonated conductor permitted incompletely expanded supersonic plasma jets to be obtained at atmospheric pressure with an escape velocity of v = 25 km/sec for a contributed energy of 1.3 kilojoules (mode I). The presence of intense continuous and linear spectra is a characteristic feature of the emission of the erosion plasma (V = 5 kilovolts, C = 1,950 microfarads (mode II) without electric detonation of the conductors) formed inside the discharge chamber. Spectroscopic measurement of the plasma temperature and concentration ($T = 6{,}000°$ K, $n_e = 5 \cdot 10^{16}$ cm^{-3})

2/3

APPROVED FOR RELEASE: 09/17/2001 CIA-RDP86-00513R002202210010-1"

"APPROVED FOR RELEASE: 09/17/2001 CIA-RDP86-00513R002202210010-1

USSR

YEL'YASHEVICH, M. A., et al., Doklady Akademii Nauk BSSR, Vol XVI, No 2, 1972, pp 115-117

indicates the formation of a relatively dense low-temperature plasma. When the plasma generator is operated with electric discharge of the conductors under the same discharge conditions, the plasma concentration increases appreciably.

3/3

APPROVED FOR RELEASE: 09/17/2001 CIA-RDP86-00513R002202210010-1"

"APPROVED FOR RELEASE: 09/17/2001 CIA-RDP86-00513R002202210010-1

AA0051782

UR 0482

Soviet Inventions Illustrated, Section II Electrical, Derwent, 1/70

239444 PHASE METER FOR BALANCED INSTRUMENTS in which the revolving shaft, under test is connected to magnet (2) mounted inside bipolar electromagnet (3) energised by impulses from oscillator (11) in the collector circuit of transistor (12). The position of shaft (5) responds to the phase shift between the oscillator and shaft (1).
6.6.67 as 1161362/18-10. L.D. GIK & V.N.NEKURIASHCHE AUTOMATION & ELECTROMETRY INST. SIBERIAN SECT.ACAD. SCIENCES USSR. (24.7.69) Bul 11/18.3.69. Class 21e. Int.Cl. G 01r.

4

AUTHORS: Gik, L. D.; Nekuryashchev, V. N.
1/2 Institut Automatiki i Elektrometrii Sibirskogo Otdeleniya AN SSSR

19820140

APPROVED FOR RELEASE: 09/17/2001 CIA-RDP86-00513R002202210010-1"

"APPROVED FOR RELEASE: 09/17/2001 CIA-RDP86-00513R002202210010-1

AA0051782

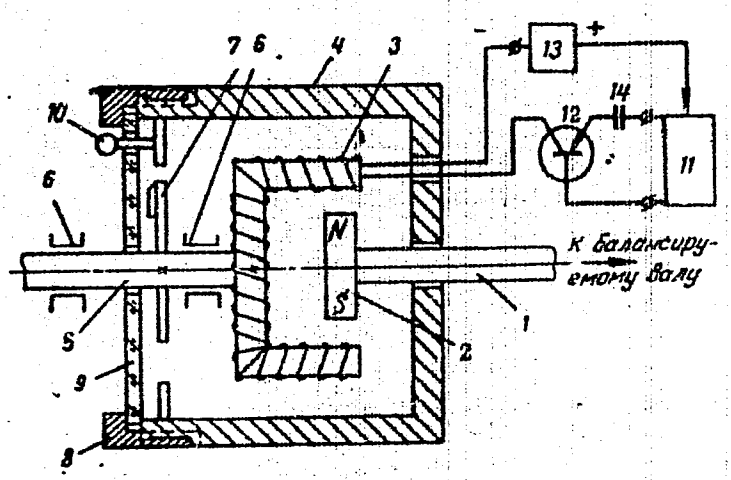

2/2

19820141

APPROVED FOR RELEASE: 09/17/2001 CIA-RDP86-00513R002202210010-1"

"APPROVED FOR RELEASE: 09/17/2001 CIA-RDP86-00513R002202210010-1

USSR UDC: 622.235.6

NELASOV, Yu. P., Moscow

"Impact Adiabats and the Short-Range Shock Zone in Drilling Solutions of Different Density"

Novosibirsk, Zhurnal Prikladnoy Mekhaniki i Tekhnicheskoy Fiziki, No 3, May/Jun 73, pp 77-82

Abstract: A study is made of impact adiabats and the short-range shock zone in a model drilling solution based on water, bentonite clay, carbon alkali reagent, and fire-grate dust as a weighting compound. The main control parameters were density and "funnel" viscosity determined by standard methods. A diagram of the test installation is given and the measurement procedure is described. The results are given in the form of tables and graphs. It is found that the specific impulse of a shock wave in the short-range region of a blast increases in approximate proportion to the initial density of the drilling solution. The viscosity of the drilling solution has no effect on the nature of propagation and amplitude of the shock wave in the short-range region of the blast.

1/1

APPROVED FOR RELEASE: 09/17/2001 CIA-RDP86-00513R002202210010-1"

"APPROVED FOR RELEASE: 09/17/2001 CIA-RDP86-00513R002202210010-1

USSR

UDC: 8.74

NELEDVA, V. A., SHASHONOK, I. A.

"Optimizing the Reliability of Elements of Complex Systems With Regard to Economic Factors"

V sb. Osnovn. vopr. teorii i praktiki nadezhnosti (Basic Problems in the Theory and Practice of Reliability--collection of works), Moscow, "Sov. radio", 1972, pp 298-327 (from RZh-Kibernetika, No 1, Jan 72, Abstract No 1V1118)

Translation: The paper deals with the effect of economic factors on requirements for reliability of elements and systems as a whole. It is shown that in regard to these factors, the attempt to maximize reliability is neither economically nor technically feasible. An approach is presented for the problem of establishing effective reliability limits, and a method is outlined for optimizing the reliability of elements in restorable systems. Author's resumé.

1/1

APPROVED FOR RELEASE: 09/17/2001 CIA-RDP86-00513R002202210010-1"

"APPROVED FOR RELEASE: 09/17/2001 CIA-RDP86-00513R002202210010-1

USSR

UDC 533.697

NELEPCHENKO, V. M.

"Experimental Study of the Hydraulic Characteristics of Cylindrical Grids"

Neft' i gaz. Tyumeni. Nauch.-tekhn. sb. (Oil and Gas of Tyumen'. Scientific-Technical Collection), 1972, No. 15, pp 49-51 (from RZh-Mekhanika, No 3, Mar 73, Abstract No 3B395)

Translation: The hydraulic characteristics of cylindrical grids with ordinary circular openings and with openings of variable shape which are obtained by displacement of an external movable cylinder attached to the cylindrical lattice are investigated. All measurements were conducted under industrial conditions on natural samples at high gas flow rates and at a pressure of 95 kg/cm^2. The investigation showed the basic analytical relationships determining the gas flow through the cylindrical grids. Graphs are given of ΔP, R and ζ as a function of b for different coefficients of the dynamic cross section of the grids. 5 ref. V. P. Aleksandrov.

1/1

APPROVED FOR RELEASE: 09/17/2001 CIA-RDP86-00513R002202210010-1"

"APPROVED FOR RELEASE: 09/17/2001 CIA-RDP86-00513R002202210010-1

NELEPIN, R. A.

JPRS 55252
23 Feb. 1972

UDC 62-505

DESIGN OF OPTIMAL AND QUASI-OPTIMAL SYSTEMS OF AUTOMATIC CONTROL

[Article by R. A. Nelepin; Moscow, Doklady Akademii Nauk SSSR, Russian, Vol 201, No 4, 1971, pp 803-805]

Let an object of automatic control be described by the system

$$\frac{d\eta_k}{dt} = \sum_{i=1}^{n} a_{ki}\eta_i + b_k u, \quad k = 1, \ldots, n, \qquad (1)$$

where η_k are the coordinates of the object, a_{ki}, b_k are the constant coefficients, u is the control. By using the analytical methods of the theory of optimal control which enables one to design the control u from the condition of the minimization of some functional, the following difficulties are encountered: 1) it is necessary to select the weighted coefficients of the functional according to additional criteria of the quality[1], which are usually connected with research of a system of non-linear differential equations; 2) ordinarily it is necessary to calculate the coefficients of the optimal law of control from systems of equations of large dimension; 3) the optimal law of control is altered by naturel non-linearities in its realization; it is necessary to select the parameters of a real system in such a way that its processes will be distinguishable in a sufficiently small manner from the processes in the optimal system. The method under consideration enables us in a number of instances to overcome these difficulties.

The control u can be designed on the basis of the so called local criteria. Let λ_i be the eigen-values of the matrix (a_{ki}); under the constraints

APPROVED FOR RELEASE: 09/17/2001 CIA-RDP86-00513R002202210010-1"

"APPROVED FOR RELEASE: 09/17/2001 CIA-RDP86-00513R002202210010-1

Acc. Nr. AA0108722 NELIDOV M.A. Ref. Code: UR 0482

Abstracting Service: 3-70

Soviet Inventions Illustrated, Section II Electrical, Derwent,

244352 ROLL PELLETISER to produce hard alloys from powder comprises smooth sprung metal rolls (1) enclosed by a cowl (3) with a bin (4) at the top and a portioner (5). A rubber sleeve (7) in the channel (6) connects to the uppers of a vibro-screen (8) carried on shock absorbers (9). Above the screen deck is an intermediate deck (10) with paddle. The two screen decks are enclosed together with a channel (12). A bin (13) below the screen (8) has a vibrator (14) and worm (15) to feed the rolls.

27.5.63 as 838490/22-2. PARFENOV.F.I., A.P. CHERNOZUBOV. V.P. MELNIKOV et al. (9.10.69) Bul 18/28.5.69. Class 18a. Int.Cl. C 21 b.

AUTHORS: Parfenov, F. I.; Chernozubov, A. P.; Mel'nikov, V. P.; Kropisnov, M. K.; Yakovlev, V. P.; Nelidov, M. A.

18

1/2

REEL/FRAME
19900498

APPROVED FOR RELEASE: 09/17/2001 CIA-RDP86-00513R002202210010-1"

"APPROVED FOR RELEASE: 09/17/2001 CIA-RDP86-00513R002202210010-1

Acc. Nr.: AA0108722

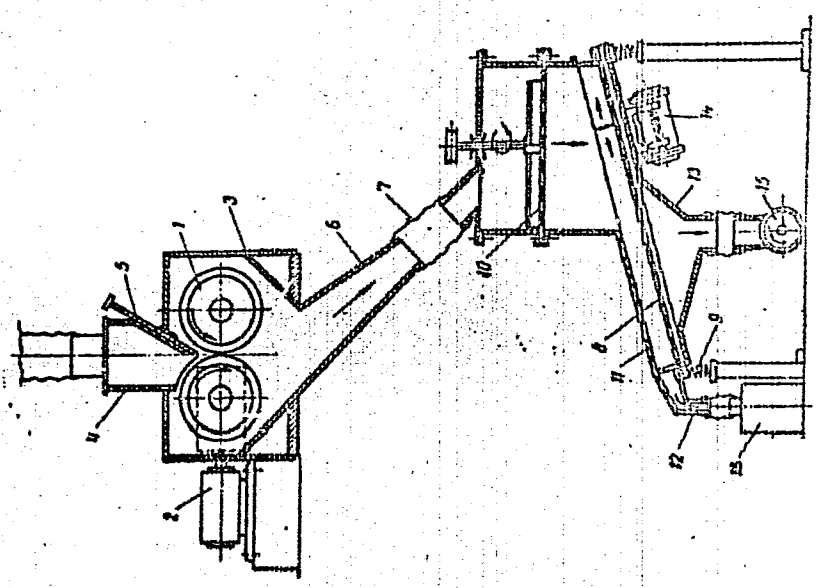

2/2

Reel/Frame

19900499

B5

APPROVED FOR RELEASE: 09/17/2001 CIA-RDP86-00513R002202210010-1"

"APPROVED FOR RELEASE: 09/17/2001 CIA-RDP86-00513R002202210010-1

USSR UDC 621.357.1.035(088.8)

NOVOSELOV, V. A., NELIDOV, V. B., MITROFANOV, V. S., ARCHAKOV, V. P., EPEL'FEL'D, F. I., SOLOVEY, L. F., PETROVSKII, P. P.

"Device for Distribution of Amalgams"

USSR Author's Certificate No 295736, filed 30/09/69, published 8/04/71. (Translated from Referativnyy Zhurnal Khimiya, No 4, Moscow, 1972, Abstract No 4L245 from the resume).

Translation: A device is patented for distribution of amalgam in scrubber separators, consisting of a perforated grid with a circular tip, separating the upper plane of the grid into central and peripheral zones with apertures for distribution of the amalgam and output of hydrogen, differing in that in order to improve the flow of amalgam, eliminate wear of the fitting and prevent hydraulic shock, the apertures in the peripheral zone are made in the form of slits covered with a screen, while the apertures for passage of amalgam are located at the points of intersection of slots made on the lower plane of the grid and forming projections, preventing blockage of the apertures with granules of the packing.

1/1

APPROVED FOR RELEASE: 09/17/2001 CIA-RDP86-00513R002202210010-1"

"APPROVED FOR RELEASE: 09/17/2001 CIA-RDP86-00513R002202210010-1

UNCLASSIFIED PROCESSING DATE--09OCT70

1/2 012

TITLE--HYGROSCOPIC NATURE, CAKING TENDENCY, AND DEGREE OF DISPERSION OF AMMONIUM SULFATE -U-

AUTHOR-(03)-PETRENKO, D.S., STUCHKOV, G.S., NELIPA, O.G.

N

COUNTRY OF INFO--USSR

SOURCE--KHIM. PROM. UKR. 1970, (1), P 13

DATE PUBLISHED--------70

SUBJECT AREAS--CHEMISTRY

TOPIC TAGS--AMMONIUM SULFATE, CRYSTAL STRUCTURE, HYGROSCOPIC WATER, PROTECTIVE PACKAGING, WATERPROOF PACKAGING MATERIAL

CONTROL MARKING--NO RESTRICTIONS

DOCUMENT CLASS--UNCLASSIFIED

PROXY REEL/FRAME--1990/1459 STEP NO--UR/0436/70/000/001/0013/0013

CIRC ACCESSION NO--AP0109519

UNCLASSIFIED

APPROVED FOR RELEASE: 09/17/2001 CIA-RDP86-00513R002202210010-1"

"APPROVED FOR RELEASE: 09/17/2001 CIA-RDP86-00513R002202210010-1

2/2 012 UNCLASSIFIED PROCESSING DATE--09OCT70

CIRC ACCESSION NO--AP0109519

ABSTRACT/EXTRACT--(U) GP-0- ABSTRACT. THE RELATION OF THE CAKING TENDENCY TO THE DEGREE OF DISPERSION OF (NH SUB4) SUB2 SO SUB4 WAS DETD. THE GRANULAR FORM IS PREFERRED TO THE CRYST. THE CAKING TENDENCY INCREASES WITH THE FINENESS OF (NH SUB4) SUB2 SO SUB4. WHEN STORED FOR 33-63 DAYS IN MOISTURE PROOF SACKS THE DISPERSIVITY OF (NH SUB4) SUB2 SO SUB4 WAS NOT IMPAIRED. SINCE THE AGROPHYS. PROPERTIES OF (NH SUB4) SUB2 SO SUB4 DEPEND SO MUCH ON THE MOISTURE CONTENT, IT IS RECOMMENDED THAT THE MOISTURE CONTENT SHALL NOT EXCEED 0.3PERCENT AND THE AMT. OF FREE ACID SHOULD BE BELOW 0.04PERCENT. A HIGHER AMT. OF ACID ENHANCES THE HYGROSCOPIC PROPERTY OF (NH SUB4) SUB2 SO SUB4 CONSIDERABLY AND MAKES IT MORE DIFFICULT TO HANDLE.

UNCLASSIFIED

APPROVED FOR RELEASE: 09/17/2001 CIA-RDP86-00513R002202210010-1"

"APPROVED FOR RELEASE: 09/17/2001 CIA-RDP86-00513R002202210010-1

USSR

NEL'NIKOV, N. N., MANDEL'BAUM, YA. A., ABRAMOVA, G. L., SMIRNOVA, N. S., GAR, K. A., BOKAREV, YE. M., ORLOVA, V. I., and MAKEYEVA, V. F.

"Synthesis and Pesticidal Activity of Dithiophosphoric Acid Amides"

V sb. Khim. sredstva zashchity rast. (Chemical Plant Protective Agents — collection of works), No 2, Moscow, 1972, pp 210-214 (from RZh-Khimiya, No 19, Oct 73, Abstract No 19N479)

Translation: Studying the relationship of structure-pesticidal activity a series of amides $R'R''N(ClCH_2CH_2O)P(S)SR'''$ (I) has been synthesized and evaluated (R=alkyl; R'=H or alkyl; R'''=alkyl, Ph, substituted phenyl) the compounds showing insecticidal and acaricidal activity. The following I have been obtained (R', R'', R''', d_4^{20}, n_D^{20}, m.p. °C being reported):

Me, H, Pr, 1.2210, 1.5450, -; Et, H, Pr, 1.1956, 1,5380, - Pr, H, Pr, 1.1660, 1.5300, -; iso-Pr, H, Pr, 1.1735, 1.5318, -; Bu, H, Pr, 1.1485, 1.5320, -; iso-Bu, H, Pr, 1.1505, 1.5280, -; Me, H, Bu, 1,2018, 1.5410, -; Et, H, BU, 1.1795, 1.5360, -; Pr, H, Bu, 1.1500,

1/4

APPROVED FOR RELEASE: 09/17/2001 CIA-RDP86-00513R002202210010-1"

"APPROVED FOR RELEASE: 09/17/2001 CIA-RDP86-00513R002202210010-1

USSR

MEL'NIKOV, et al., V sb. Khim sredstva zashchity rast., No 2, Moscow, 1972, pp 210-214.

1.5285, -; iso-Pr, H, Bu, 1.1295, 1.5310, -; Bu, H, Bu, 1.1285, 1.5280, -; iso-Bu, H, Bu, 1.1285, 1.1545, -; Me, Me, Pr, 1.2123, 1.5450, -; Et, Et, Pr, 1.1313, 1.5180, -; Pr, Pr, Pr, 1.0831, 1.5040, -; Bu, Bu, Pr, 1.0601, 1.5031, -; Me, Me, iso-Pr, 1.1900, 1.5325, -; Et, Et, iso-Pr, 1.1233, 1.5160, -; Pr, Pr, iso-Pr, 1.0910, 1.5080, -; Bu, Bu, iso-Pr, 1.0732, 1.5090, -; Me, Me, Bu, 1.2133, 1.5500, -; Et, Et, Bu, 1.1123, 1.5160, -; Pr, Pr, Bu, 1.0827, 1.5160, -; Bu, Bu, Bu, 1.0581, 1.5060, -; Me, H, Ph, -, -, 124; Et, H, Ph, -, -, 65; Pr, H, Ph, -, -, 60; iso-Pr, H, Ph, -, -, 74-5; Bu, H, Ph, -, -, 45; iso-Bu, H, Ph, -, -, 78-9; Me, H, C_6H_4Cl-4, -, -, 118-9; Et, H, C_6H_4Cl-4, -, -,

2/4

APPROVED FOR RELEASE: 09/17/2001 CIA-RDP86-00513R002202210010-1"

"APPROVED FOR RELEASE: 09/17/2001 CIA-RDP86-00513R002202210010-1

USSR

MEL'NIKOV, et al., V sv. Khim sredstva zashchity rast., No 2, Moscow, 1972 pp 210-214

71-2; Pr, H, C_6H_4Cl-4, -, -, 59-60; iso-Pr, H, C_6H_4Cl-4, -, -, 60-1; Bu, H, C_6H_4Cl-4, -, -, 60-1; iso-Bu, H, C_6H_4Cl-4, -, -, 61-62; Me, Me, C_6H_4Cl-4, 1.3632, 1.6081, -; Et, Et, C_6H_4Cl-4, 1.2700, 1.5705, -; Pr, Pr, C_6H_4Cl-4, 1.2261, 1.5565, -; Bu, Bu, C_6H_4Cl-4, 1.1821, 1.5530, -; Me, Me, Ph, 1.2561, 1.5720, -; Et, Et, Ph, 1.2223, 1.5675, -; Pr, Pr, Ph, 1.1700, 1.5520, -; Bu, Bu, Ph, 1.1610, 1.5500, -; Me, Me, $C_6H_3Cl_2$-2,5, -, -, 74-75; Et, Et, $C_6H_3Cl_2$-2,5, -, -, 70-1; Pr, Pr, $C_6H_3Cl_2$-2,5, -, -, 66-7; Bu, Bu, $C_6H_3Cl_2$-2,5, 1.2763, 1.5660, -; Me, H, Ph, -, -, 74-5; Et, H, Ph, -, -, 73-4; Pr, H, Ph, -, -, 64-5; iso-Pr, H, Ph, -,

3/4

APPROVED FOR RELEASE: 09/17/2001 CIA-RDP86-00513R002202210010-1"

"APPROVED FOR RELEASE: 09/17/2001 CIA-RDP86-00513R002202210010-1

USSR

MEL'NIKOV, N. N., et al., V sb. Khim. sredstva zashchity rast., No 2, Moscow, 1972, pp 210-214

-, 69-70; Bu, H, Ph, -, -, 59-60; iso-Bu, H, Ph, -, -, 83-4; Me, Me, Ph, -, -, 78-9; Et, Et, C_6H_5, -, -, 61-3; Bu, Bu, C_6Cl_5, -, -, 40-1; Me, H, $C_6H_4NO_2$-4, -, -, 69-70; Et, H, $C_6H_4NO_2$-4, -, -, 65-6; Pr, H, $C_6H_4NO_2$-4, -, -, 62-3; iso-Pr, H, $C_6H_4NO_2$-4, -, -, 60-1; Bu, H, $C_6H_4NO_2$-4, -, -, 62-3; iso-Bu, H, $C_6H_4NO_2$-4, -, -, 60-2; Me, Me, $C_6H_4NO_2$-4, -, -, 73-4; Et, Et, $C_6H_4NO_2$-4, -, -, 70-1; Pr, Pr, $C_6H_4NO_2$-4, -, -, 69-70; Bu, Bu, $C_6H_4NO_2$-4, -, -, 65-6.

4/4

APPROVED FOR RELEASE: 09/17/2001 CIA-RDP86-00513R002202210010-1"

"APPROVED FOR RELEASE: 09/17/2001 CIA-RDP86-00513R002202210010-1

USSR UDC: 621.315.592

VINOGRADOVA, M. N., DRABKIN, I. A., YELISEYEVA, Yu. Ya., and NEL'SON, I. V.

"Optical Characteristics of p-Type $Pb_{1-x}Mn_xTe$ Solid Solutions"

Leningrad, Fizika i tekhnika poluprovodnikov, No 8, 1972, pp 1478-1482

Abstract: The work described by this paper is the investigation of infrared reflection and absorption spectra in solid solutions of $Pb_{1-x}Mn_xTe$, with the purpose of explaining the energy structure of these alloys. The reflection spectra were measured with specimens having various carrier concentrations and with an Mn concentration of up to 9% at 300° K, and such spectra are plotted for alloys in which x = 0.03, 0.06, 0.09 with identical Hall concentrations. The absorption spectra were obtained for polycrystalline specimens of $Pb_{0.95}Mn_{0.05}Te$ and $Pb_{0.9}Mn_{0.1}Te$ and are reproduced as well. It is found that the introduction of Mn into $Pb_{1-x}Mn_xTe$ alloys leads to a change in the respective positions of light and heavy hole zones, and that the structure of the alloys' valent zones differs substantially from those of PbTe.

1/1

APPROVED FOR RELEASE: 09/17/2001 CIA-RDP86-00513R002202210010-1"

"APPROVED FOR RELEASE: 09/17/2001 CIA-RDP86-00513R002202210010-1

USSR UDC: 621.315.592

DRABKIN, I. A., MORGOVSKIY, L. Ya., NEL'SON, I. V., and RAVICH, Yu. I., Semiconductor Institute, Leningrad

"Characteristic Light Absorption in Nonparabolic Regions of PbTe and Solid PbTe-SnTe Solutions"

Leningrad, Fizika i tekhnika poluprovodnikov, No 7, 1972, pp 1323-1326

Abstract: A comparison is made between the experimental data for the absorption coefficient of PbTe and compounds of similar zonal structure on the one hand, and the theoretical expressions derived on the basis of the two-zone model on the other. Computation of the characteristic absorption coefficient is made in the framework of the two-zone model by computing the matrix elements of the dipole junctions through the use of wave functions found by the $\overline{kp}$ method. Such calculations show that the absorption coefficient in the nonparabolic zone increases because of the faster growth of the density of the compounds as a function of the energy. Experiments to determine the absorption of epitaxial films of PbTe, $Pb_{0.9}Sn_{0.1}Te$ and $Pb_{0.8}Sn_{0.2}Te$ are described. The results of these

APPROVED FOR RELEASE: 09/17/2001 CIA-RDP86-00513R002202210010-1"

"APPROVED FOR RELEASE: 09/17/2001 CIA-RDP86-00513R002202210010-1

USSR

DRABKIN, I. A., et al, Fizika i tekhnika poluprovodnikov. No 7, 1972, pp 1323-1326

experiments are given in the form of curves showing the absorption coefficient and the coefficient squared as functions of the light energy. For the sake of comparison, the theoretical and experimental results are plotted on the same axes.

2/2

APPROVED FOR RELEASE: 09/17/2001 CIA-RDP86-00513R002202210010-1"

"APPROVED FOR RELEASE: 09/17/2001 CIA-RDP86-00513R002202210010-1

USSR

UDC 537.311.33

NEMISH, I.YU., MALYUTENKO, V.K., ZARUBIN, L.N.

"Possibility Of Using Cadmium Antimonide In Semiconductor Technology"

Poluprovodn. tekhn. i mikroelektronika. Resp. mezhved.sb. (Semiconductor Technology And Microelectronics. Republic Interdepartmental Collection), 1972, Issue 7, pp 66-73 (from RZh:Elektronika i yeye primeneniye, No 9, Sept 1972, Abstract No 9B40)

Translation: The principal physical properties of cadmium antimonide are presented and the technology of its preparation is described. It is shown that single crystals of CdSb doped with appropriate impurities can be used successfully as detectors of infrared radiation in the region of the wavelengths $\lambda \leqslant 3$ micron, and as the active elements of semiconductor thermogenerators. A comparison of the parameters of known devices and their analogs based on CdSb show the prospects for use of the latter in construction of semiconductor devices. 19 ref. Summary.

1/1

APPROVED FOR RELEASE: 09/17/2001 CIA-RDP86-00513R002202210010-1"

"APPROVED FOR RELEASE: 09/17/2001 CIA-RDP86-00513R002202210010-1

USSR UDC: 621.315.592

DRABKIN, I. A. and NEL'SON, I. V., Semiconductor Institute, Acad. Sci.USSR Leningrad

"Infrared Absorption by p-Type $Pb_{1-x}Sn_xTe$ Alloys"

Leningrad, Fizika i tekhnika poluprovodnikov, vol 6, No 6, 1972, pp 1046-1049

Abstract: The results of experimental investigations into the infrared absorption characteristics of n-type and p-type $Pb_{1-x}Sn_xTe$ solid solutions, where x = 0.02, 0.05, 0.1, and 0.2, are given in this paper. Specimens for the experiments were prepared from alloys of the original components in evacuated ampoules, the components being heated by pressing and consequent homogenization by annealing. X-ray and metallographic analysis was used to verify that the specimen was single-phased. The absorption measurements were made with the IKS-21 infrared spectrometer, the temperature tests of the spectra being made in a special vessel to permit direct measurement of the absorption in a micro-attachment, type PMO-2M, in the 110-300° K interval. The authors find that their results agree closely with the data obtained by other researchers.

1/1

APPROVED FOR RELEASE: 09/17/2001 CIA-RDP86-00513R002202210010-1"

"APPROVED FOR RELEASE: 09/17/2001 CIA-RDP86-00513R002202210010-1

Acc. Nr. AP0053759 - Abstracting Service: CHEMICAL ABST. Ref. Code UR0368

112003w **Ir-absorption spectra and interaction of isoprene with a modified Aerosil surface.** Nel'son, K. V.; Ikonitskii, I. V.; Ryzhikov, V. A. (USSR). *Zh. Prikl. Spektrosk.* 1970, 12(1), 80-4 (Russ). The effects of the reaction between Aerosil (I) and $TiCl_4$ on the structural changes occurring in isoprene (II) during adsorption were studied by means of a spectrophotometer IR-10 at 2000-3750 cm^{-1}. Adsorption of $TiCl_4$ on I brought about the formation of reactive sites on which chemisorption of II took place. $TiCl_4$-modified I surface initiated the polymn. of II to give a nearly linear polyisoprene. On the other hand, adsorption of II vapors on a nonmodified I surface involved only a negligible interaction with the OH groups of I. CKJR

REEL/FRAME
19830822

APPROVED FOR RELEASE: 09/17/2001 CIA-RDP86-00513R002202210010-1"

"APPROVED FOR RELEASE: 09/17/2001 CIA-RDP86-00513R002202210010-1

1/2 008 UNCLASSIFIED PROCESSING DATE--16OCT70

TITLE--USE OF ONE MESON APPROXIMATION TO DETERMINE PI PI INTERACTION CROSS SECTIONS -U-

AUTHOR-(04)-MAKAROV, M.M., NELYUBIN, V.V., SARANTSEV, V.V., TKACH, L.N.

COUNTRY OF INFO--USSR

SOURCE--YAD. FIZ. 1970, 11(2), 461-7

DATE PUBLISHED--------70

SUBJECT AREAS--PHYSICS

TOPIC TAGS--PION PION INTERACTION, APPROXIMATION CALCULATION, PION PROTON INTERACTION

CONTROL MARKING--NO RESTRICTIONS

DOCUMENT CLASS--UNCLASSIFIED

PROXY REEL/FRAME--1991/1038 STEP NO--UR/0367/70/011/002/0461/0467

CIRC ACCESSION NO--AP0110728

UNCLASSIFIED

APPROVED FOR RELEASE: 09/17/2001 CIA-RDP86-00513R002202210010-1"

"APPROVED FOR RELEASE: 09/17/2001 CIA-RDP86-00513R002202210010-1

2/2 008 UNCLASSIFIED PROCESSING DATE--16OCT70

CIRC ACCESSION NO--AP0110728

ABSTRACT/EXTRACT--(U) GP-0- ABSTRACT. ELASTIC PI PRIME POSITIVE PI PRIME NEGATIVE INTERACTION CROSS SECTIONS ARE DETD. BY ANAL. OF EXPTL. DATA ON THE REACTION PI PRIME NEGATIVE P YIELDS PI PRIME POSITIVE PI PRIME NEGATIVE N IN THE ENERGY RANGE 360-780 MEV. FACILITY: FIZ. TEKH. INST. IM. IOFFE, LENINGRAD, USSR.

UNCLASSIFIED

APPROVED FOR RELEASE: 09/17/2001 CIA-RDP86-00513R002202210010-1"

"APPROVED FOR RELEASE: 09/17/2001 CIA-RDP86-00513R002202210010-1

SO: JPRS 51279
14 June 73

STUDIES OF THE TRANSPORT OF CERTAIN DONOR AND ACCEPTOR ADMIXTURES FOR EPITAXIAL GROWTH OF SILICON BY THE SANDWICH METHOD

[Article by B. G. Arokhin, E. M. Zhurkina, G. F. Lymar', A. N. Nelyubova; Novosibirsk, Protsessy Rosta i Struktura Monokristallicheskikh Sloyev Poluprovodnikov -- Trudy Simpoziuma, Russian, Part 2, 1969, pp 69-76]

The Sandwich method of growing epitaxial layers of semiconductors based on the transport of the material through its volatile compounds by a reversible heterogeneous reaction between the heat source and substrate in the presence of a temperature gradient is simple and convenient for laboratory practice. The possibility of obtaining Si layers with appreciably higher specific resistance than in the open chloride process with the same requirements on the purity of the initial reagents, the possibility of alloying (when selecting the corresponding transport agents) with such admixtures of elements of groups III and V the working with the halides of which in the flow system is complicated, the possibility of working with highly alloyed sources without contaminating the reactor and the gas mains — all of these justify the interest in the Sandwich method.

In order to obtain epitaxial layers of Si with given electrical parameters by the Sandwich method it is necessary to know in detail the transport coefficients of the alloying admixtures for specific process conditions (type of carrier, growth rate, impurity concentration in the source, and so on). The indicated problems as applied to silicon are explained highly incompletely in the literature [1, 2].

The purpose of this paper was to determine the transport coefficients $K_{eff} = C_{film}/C_{source}$ (the concentration ratio of the admixture in the epitaxial layer and the source) of certain donor and acceptor admixtures P, As, Sb, B, In, Ga, Al) and their dependence on the transport conditions when transporting silicon through the volatile dichloride $SiCl_2$ by the reversible reaction

$$Si + 2\,HCl \rightleftharpoons SiCl_2 + H_2.$$

NELYUBOVA, A.N.

APPROVED FOR RELEASE: 09/17/2001 CIA-RDP86-00513R002202210010-1"

"APPROVED FOR RELEASE: 09/17/2001 CIA-RDP86-00513R002202210010-1

1/2 027 UNCLASSIFIED PROCESSING DATE--27NOV70

TITLE--EFFECT OF BORON ON THE ACCUMULATION OF SUGAR IN SUGAR BEETS AND CARROTS -U-

AUTHOR-(02)-NELYUBOVA, G.L., DOROZHKINA, L.A.

N

COUNTRY OF INFO--USSR

SOURCE--IZV. TIMIRYAZEV. SEL'SKOKHOZ. AKAD. 1970, (1), 118-26

DATE PUBLISHED--------70

SUBJECT AREAS--BIOLOGICAL AND MEDICAL SCIENCES

TOPIC TAGS--BORON, FOOD ANALYSIS, RADIOACTIVE TRACER, CARBOHYDRATE METABOLISM

CONTROL MARKING--NO RESTRICTIONS

DOCUMENT CLASS--UNCLASSIFIED

PROXY REEL/FRAME--3008/0545 STEP NO--UR/9058/70/000/001/0118/0126

CIRC ACCESSION NO--AP0137634

UNCLASSIFIED

APPROVED FOR RELEASE: 09/17/2001 CIA-RDP86-00513R002202210010-1"

"APPROVED FOR RELEASE: 09/17/2001 CIA-RDP86-00513R002202210010-1

2/2 027 UNCLASSIFIED PROCESSING DATE--27NOV70

CIRC ACCESSION NO--AP0137634

ABSTRACT/EXTRACT--(U) GP-0- ABSTRACT. BORON WAS APPLIED TO CARROTS AND SUGAR BEETS GROWN IN POTS CONTG. SAND AT 1.0 AND 0.1 MG-KG, AND 4.0 AND 0.4 MG-KG, RESP. WHEN THE PLANTS WERE 90 AND 106-110 DAYS OLD, PRIME14 CO SUB2 WAS INTRODUCED FOR 1 HR. THE LEAVES AND ROOTS WERE ANALYZED FOR SUGARS AND RADIOACTIVITY. IN ANOTHER EXPT. A GROWTH INHIBITOR, 0.5PERCENT MALEIC HYDRAZIDE WAS SPRAYED ON THE PLANTS TO STUDY THE EFFECT ON CARBOHYDRATE TRANSPORT. BORON DEFICIENCY LED TO A BREAKDOWN IN SUGAR TRANSPORT NOT ONLY FROM THE LEAVES TO THE ROOT BUT INSIDE THE ROOT ITSELF. THESE CHANGES IN CARBOHYDRATE METABOLISM OCCURRED BEFORE ANY EXTERNAL SYMPTOMS OF B DEFICIENCY WERE OBSERVED. THE EFFECTS OF MALEIC HYDRAZIDE WERE SIMILAR IN MANY, BUT NOT ALL, WAYS. GROWTH PROCESSES AFFECTED THE TRANSLOCATION OF CARBOHYDRATES, AND GROWTH INHIBITION DUE TO B DEFICIENCY SHOWED UP IN THE SUGAR OUTFLOW.

UNCLASSIFIED

APPROVED FOR RELEASE: 09/17/2001 CIA-RDP86-00513R002202210010-1"

"APPROVED FOR RELEASE: 09/17/2001 CIA-RDP86-00513R002202210010-1

USSR UDC 576.851.45(yersinia).095.1

NEL'ZINA, Ye. N., Rostov-on-Don Scientific Research Antiplague Institute

"The Plague Microorganism (Yersinia pestis) as a Component of Burrow Microbiocenoses"

Moscow, Meditsinskaya Parazitologiya i Parazitarnyye Bolezni, Vol 42, No 1, Jan/Feb 73, pp 62-68

Abstract: The interrelationships of Y. pestis (P. pestis) with other components of burrow biocenoses are described. P. pestis is regarded as an obligatory nidicole requiring for its existence in deserts and semideserts the conditions typical for the system P. pestis - rodent - fleas in burrows. It is pointed out that for the long-term preservation of foci of plague the survival of P. pestis in the gastrointestinal tract of ticks is also of importance. P. pestis can be preserved in Ixodidae and Argasidae ticks for 1-3 years in a focus of infection without occurrence of an epizootic outbreak. Ticks of some species inhabit partly burrows and partly the outside surface used as pasture by animals. Hyalomma asiaticum, which inhabit burrows in the larva and nymph stages and pastures in the imago stage, transmit plague from rodents to camels. The frequency of infection of camels would be higher if these animals were less resistant and if infection did not proceed by a passive mechanism (crushing of

APPROVED FOR RELEASE: 09/17/2001 CIA-RDP86-00513R002202210010-1"

"APPROVED FOR RELEASE: 09/17/2001 CIA-RDP86-00513R002202210010-1

USSR

NEL'ZINA, Ye. N., Meditsinskaya Parazitologiya i Parazitarnyye Bolezni, Vol 42, No 1, Jan/Feb 73, pp 62-68

ticks and rubbing in of the ticks and of their excrements) rather than in an active way such as inoculation by fleas. In a footnote by the editors, it is pointed out that according to some experimental results lice may be of epizootological importance as transmitters of plague from rodent to rodent.

2/2

APPROVED FOR RELEASE: 09/17/2001 CIA-RDP86-00513R002202210010-1"

"APPROVED FOR RELEASE: 09/17/2001 CIA-RDP86-00513R002202210010-1

USSR UDC 599.323.4-155.3

KLIMOVA, Z. I. and NEL'ZINA, Ye. N., Rostov-na-Donu Scientific Research Antiplague Institute and Uzbek Antiplague Station

"Morphofunctional Organization of Burrow Microbiocenoses of the Great Gerbil in Northern Kyzyl-Kum. 2. Seasonal Aspects of the Structure of Burrow Microbiocenoses"

Moscow, Meditsinskaya Parazitologiya i Parazitarnyye Bolezni, No 5, 1971, pp 566-571

Abstract: The burrows of great gerbils are complex microbiotopes with equally complex microbiocenoses. The large capacity and intricate differentiation of the microbiotope (considerable length of the passageways and different kinds of chambers) favor the existence here of numerous and ecologically varied arthropods (blood suckers, entomophages, schizophages, euryphages, mycetophages, phytophages). The highly organized and comparatively stable gerbil biocenoses undergo seasonal changes. The species composition and relative numbers of the nidicolous insects and the distribution of blood suckers between host and burrow within the burrow proper vary from season to season. The two factors of basic importance are the seasonal changes in vertical stratification of the temperature in the burrow and the corresponding changes in gerbil behavior.

1/1

APPROVED FOR RELEASE: 09/17/2001 CIA-RDP86-00513R002202210010-1"

"APPROVED FOR RELEASE: 09/17/2001 CIA-RDP86-00513R002202210010-1

USSR UDC: 621.397.61

ZIMNEV, M. M., NEMANOV, V. S., OKMAN, A. A.

"Audio Equipment at the Soviet-Wide Television Center"

V sb. Televizion. tekhnika (Television Technology--collection of works), Moscow, "Svyaz'", 1971, pp 164-181 (from RZh-Radiotekhnika, No 6, Jun 71, Abstract No 6G173)

Translation: The authors discuss the principal elements of the audio channel -- amplifiers, electroacoustic equipment, etc. A description is given of the main equipment in the sound studio module and the equipment of the central services -- programming unit, translating unit, video recording unit, etc. The technical characteristics of the main audio channels of the telecenter are given. Six illustrations. N. S.

1/1

APPROVED FOR RELEASE: 09/17/2001 CIA-RDP86-00513R002202210010-1"

"APPROVED FOR RELEASE: 09/17/2001 CIA-RDP86-00513R002202210010-1

Pesticides

USSR

UDC 632.24

SBOYEVA, ZH. N., MEMATOV, G. N.

"Effectiveness of Benomyl against Verticillium Cotton Wilt"

Moscow, Khimiya v Sel'skom Khozyaystve, No 1, 1972, pp 22-24

Abstract: A study was made at the Andizhan branch of the All-Union Scientific Research Institute of Cotton Growing to determine the effect of various doses of benomyl on the rate of affection cotton with verticillidse wilt, with injections of the fungicide in different ways and at different times. In the vegetative experiment benomyl injected into the soil was absorbed by the roots of the cotton plant and reached the leaves through the stalk as a result of which the development of verticillidse wilt was almost completely suppressed. In lisimeters and under field conditions, benomyl was less effective by comparison with the vegetative experiment, but this is explained by poor procedures used in applying the fungicide. Comparative data for the various experiments are presented in tabular form. In the vegetative experiments, the number of bolls and the weight of the cotton in them were both increased. The maximum increase in yield (36 grams per plant) occurred for injection of benomyl in the amount of 6 grams into the vessel to a depth of 20 cm. About the same increment was obtained in the version with a 12 gram dose. This indicates that benomyl is not toxic to cotton.

1/1

APPROVED FOR RELEASE: 09/17/2001 CIA-RDP86-00513R002202210010-1"

"APPROVED FOR RELEASE: 09/17/2001 CIA-RDP86-00513R002202210010-1

RAN/ /K-160/5-MKP 73 118 (1)

Dec 72

napryazheniy pri razrushenii prod vzryvom, Gosgortekhizdat, 1962) that rocks be divided into three groups based on the physicomechanical properties and manner of occurrence of the destruction process (by low, medium and high acoustic rigidity). Mosinets (IAN KirgSSR, 1963) established that 75-80% of the total destruction is created in advance by stress waves propagating in the rock mass, and it is completed by the piston action of the gaseous explosion products. According to Drukovskiy and Komir (IN: Sbornik. Vzryvnoye delo, 1965) the mechanism of rock destruction from an explosion is determined by the value and duration of the explosive impulse. Mel'nikov and Marchenko (IGO AN SSSR, 1959) proposed a method for decreasing the explosion energy loss by using charges dispersed lengthwise by air intervals.

The mechanism of the action of Ignadit was reported on by Demidyuk (IN: Sbornik. Vzryvnoye delo, no. 45, 1960). The authors note in conclusion that a large number of differing and in some cases contradictory theories have been presented on explosive effects in rocks, and remain to be reconciled.

Nematov, L. Propagation of one-dimensional spherical shock waves in soil (direct problem). IN: Voprosy vycheslitel'noy i prikadnoy matematiki, Tashkent, no. 7, 1971, 115-119 (RZhMekh, 5/72, #5V501)

The problem is considered of the propagation of a shock wave formed during the expansion of a sphere, in an unbounded space. At the initial moment of time, the spherical surface instantaneously acquires a finite velocity, which then changes in accordance with a given law. The solution is worked out on a computer by the method of characteristics. The obtained values of the velocity and deformation of particles in the shock wave are presented as functions of time and space coordinates.

NEMATOV, L.

APPROVED FOR RELEASE: 09/17/2001 CIA-RDP86-00513R002202210010-1"

"APPROVED FOR RELEASE: 09/17/2001 CIA-RDP86-00513R002202210010-1

1/3 010 UNCLASSIFIED PROCESSING DATE--18SEP70

TITLE--ISOTOPIC COMPOSITION OF CARBON IN NATURAL GASES NORTHERN WEST SIBERIAN LOWLAND IN RELATION TO THEIR ORIGIN -U-

AUTHOR-(05)-YERMAKOV, V.I., LEBEDEV, V.S., NEMCHENKO, N.N., ROVENSKAYA, A.S., GRACHEV, A.V.

COUNTRY OF INFO--USSR

SOURCE--DOKL. AKAD. SSSR 1970, 190(3), 683-6 (GEOCHEM)

DATE PUBLISHED--------70

SUBJECT AREAS--NUCLEAR SCIENCE AND TECHNOLOGY, EARTH SCIENCES AND OCEANOGRAPHY

TOPIC TAGS--NATURAL GAS, CARBON, ISOTOPE, RADIOCARBON DATING, GEOLOGI SURVEY

CONTROL MARKING--NO RESTRICTIONS

DOCUMENT CLASS--UNCLASSIFIED

PROXY REEL/FRAME--1984/0272 STEP NO--UR/0020/70/190/003/0683/0686

CIRC ACCESSION NO--AT0055068

UNCLASSIFIED

APPROVED FOR RELEASE: 09/17/2001 CIA-RDP86-00513R002202210010-1"

"APPROVED FOR RELEASE: 09/17/2001 CIA-RDP86-00513R002202210010-1

2/3 010 UNCLASSIFIED PROCESSING DATE--18SEP70

CIRC ACCESSION NO--AT0055068

ABSTRACT/EXTRACT--(U) GP-0- ABSTRACT. A NEW NATURAL GAS PROVINCE, CONTG. RICH RESOURCES, WAS DISCOVERED RECENTLY IN THE NORTHERN PART OF WEST SIBERIAN LOWLAND. THE GAS DEPOSITS THERE ARE CONFINED TO THE CENOMANIAN STRATA FORMING AN UPPER PART OF THE POKURSK OILBEARING SERIES (APTIAN-ALBIAN-CENOMANIAN) WHICH CONSIST MOSTLY OF CONTINENTAL COASTAL MARINE FACIES. THE ISOTOPIC COMPN. OF C IN THESE GASES WAS DETD. AND COMPARED WITH THE PDB (THE CHICAGO STD. WITH PRIME12 C- PRIME13 C EQUALS 88.99PERCENT) TO DET. THE ORIGIN OF GAS IN THESE DEPOSITS. THE DEPOSITS OCCUPY A SPECIAL POSITION AMONG THE OTHER NATURAL GAS DEPOSITS OF YOUNG PLATFORMS, SITUATED IN MESOZOIC FORMATIONS, BEING MUCH RICHER IN PRIME12 C ISOTOPE (DELTA PRIME13 C FROM MINUS 5.83 TO MINUS 6.78PERCENT). E.G., THE GASES OF BUKHARA-KHIVA (TURANSK PLATFORM) HAVE DELTA PRIME13 C FROM MINUS 3.02 TO MINUS 3.82PERCENT AND GASES IN KRASNODAR DEPOSITS (SCYTHIAN PLATFORM) HAVE DELTA PRIME13 C VARYING FROM MINUS 3.76 TO MINUS 4.66PERCENT. THE DELTA PRIME13 C OF NORTHERN WEST SIBERIAN DEPOSITS IS VERY SIMILAR TO THAT OF THE MARSH GASES IN EUROPEAN PARTS OF THE U.S.S.R. WHERE IT VARIES FROM MINUS 5 TO MINUS 6.9PERCENT. THE DEGREE OF ORG. SUBSTANCE METAMORPHISM INDICATED THAT CONDITIONS OF GAS FORMATION IN NEW DEPOSITS WERE SIMILAR TO THE COALIFICATION IN APTIAN-ALBIAN-CENOMANIAN DEPOSITS AND TO GAS FORMATION IN RECENT MARSHES. THE MIGRATION OF GASES FROM DEPOSITS, UNDERLYING THE POKURSK SERIES, WAS EXCLUDED BY THE DATA ON ISOTOPIC COMPN. OF HYDROCARBON GASES OBTAINED DURING TESTING OF DEEP HORIZONS IN SOME OF THESE DEPOSITS (DELTA PRIME13 C FROM MINUS 3.85 TO MINUS 4.56PERCENT).

UNCLASSIFIED

APPROVED FOR RELEASE: 09/17/2001 CIA-RDP86-00513R002202210010-1"

"APPROVED FOR RELEASE: 09/17/2001 CIA-RDP86-00513R002202210010-1

3/3 010 UNCLASSIFIED PROCESSING DATE--18SEP70

CIRC ACCESSION NO--AT0055068

ABSTRACT/EXTRACT--THE SOURCE OF GASES, DURING FORMATION OF THESE GAS DEPOSITS, WAS THE COAL SUBSTANCE SCATTERED IN THE ROCKS OF THE APTIAN-ALBIAN-CENOMANIAN COMPLEX.

UNCLASSIFIED

APPROVED FOR RELEASE: 09/17/2001 CIA-RDP86-00513R002202210010-1"

"APPROVED FOR RELEASE: 09/17/2001 CIA-RDP86-00513R002202210010-1

USSR

UDC 669.295

MAL'KO, P. I., ARENSBURGER, D. S., PUGIN, V. S., NEMCHENKO, V. F., and L'VOV, S. N., Institute of Problems of Material Science, Academy of Sciences Ukr SSR, Kherson State Pedagogical Institute imeni N. K. Krupskaya

"Thermal and Electrical Properties of Porous Titanium"

Kiev, Poroshkovaya Metallurgiya, No 8, Aug 70, pp 35-38

Abstract: A study was made of the dependence of the coefficient of thermal conductivity, the thermal expansion, the thermoelectromotive force, and the resistivity of titanium on 0-50% porosity in the interval from room temperature to 1200° C. Thermal conductivity and electrical conductivity decreased with an increase in porosity. It was not possible to apply formulas of generalized conductivity for the determination of the dependence of thermal conductivity and electrical conductivity on porosity. This is explained by the coarseness of grain size of the initial powder (1-0.1 mm).

1/1

APPROVED FOR RELEASE: 09/17/2001 CIA-RDP86-00513R002202210010-1"

"APPROVED FOR RELEASE: 09/17/2001 CIA-RDP86-00513R002202210010-1

USSR

UDC 669.017:537.32

NEMCHENKO, V. F., L'VOV, S. N., MAL'KO, P. I., and VERESHCHAKA, N. P., Kherson Pedagogical Institute imeni N. K. Krupskaya

"Temperature Dependence of the Absolute Thermo-e.m.f. Coefficient of Certain Transition Metals"

Moscow, Fizika Metallov i Metallovedeniye, Vol 30, No 5, 1970, pp 1088-1090

Abstract: The transition metals are widely used as structural materials in various high-temperature applications, particularly in electronic-vacuum devices. The high-temperature gradients and combinations of dissimilar metals may result in significant thermoelectromotive forces, which must be considered in many cases. Therefore, study of the thermoelectric properties of the transition metals is of great practical and theoretical significance. This work presents a determination of the temperature dependence of the absolute thermo-e.m.f. coefficient of the transition metals in subgroup IV A, as well as vanadium, chromium, iron, and nickel at 50-1,200°C. The nature of the temperature dependence of α_0 for ferromagnetic iron and the nonferromagnetic metals of

1/2

APPROVED FOR RELEASE: 09/17/2001 CIA-RDP86-00513R002202210010-1"

"APPROVED FOR RELEASE: 09/17/2001 CIA-RDP86-00513R002202210010-1

USSR

NEMCHENKO, V. F., et al, Fizika Metallov i Metallovedeniye, Vol 30, No 5, 1970, pp 1088-1090

group IV was approximately the same. The temperature dependence of the absolute thermo-e.m.f. coefficient of the transition nonferromagnetic metals is just as complex as that of the ferromagnetic metals and can be qualitatively explained only by using a complex d-zone model.

2/2

APPROVED FOR RELEASE: 09/17/2001 CIA-RDP86-00513R002202210010-1"

"APPROVED FOR RELEASE: 09/17/2001 CIA-RDP86-00513R002202210010-1

USSR UDC: 629.78.002.3

TROFIMOVSKAYA, L. S., NEMCHENOK, L. S., and KOZLOV, S. G.

"Materials for the Cages of Instrument Ball Bearings"

Tr. Leningr. in-t aviats. priborostr. (Works of the Leningrad Institute of Aviation Instrument Building), 1971, vyp. 73, pp 97-102 (from RZh-41. Raketostroyeniye, Moscow, No 3, Mar 1972, Abstract No 3.41.242)

Translation: The authors present the results of a study on the wear resistance and coefficient of friction of the AFGM-60 materials, DE3 sheet graphite and textolite on a polished base, all of which can be used for cages of high-speed bearings. Original article: four illustrations, one table, and two bibliographic entries. Resume.

1/1

APPROVED FOR RELEASE: 09/17/2001 CIA-RDP86-00513R002202210010-1"

"APPROVED FOR RELEASE: 09/17/2001 CIA-RDP86-00513R002202210010-1

USSR

UDC 537.533.2+537.534

NEMCHENOK, R. L., IVANOV, A. V., KARPOV, A. A.

"Emission Properties of the Au-BaO System"

Tr. Leningr. politekhn. in-ta (Works of Leningrad Polytechnical Institute), 1970, No 311, pp 51-55 (from RZh-Fizika, No 12(I), Dec 70, Abstract No 12Zh631)

Translation: The properties of the Au-BaO system were studied by external photoeffect and thermoemission methods. The measurements were conducted in sealed devices in a high vacuum ($p < 5 \cdot 10^{-9}$ mmHg). It was shown that for surface concentrations $n_{BaO} > 1 \cdot 10^{15}$ cm^{-2} the BaO film has photoelectric properties of thick oxide coatings and, in particular, sensitivity to ultraviolet radiation. The nature of the changes in emission properties of the Au-BaO system to $T = 1200°K$ does not indicate chemical interaction of the BaO film with Au. Authors abstract.

1/1

APPROVED FOR RELEASE: 09/17/2001 CIA-RDP86-00513R002202210010-1"

"APPROVED FOR RELEASE: 09/17/2001 CIA-RDP86-00513R002202210010-1

USSR UDC 536.24.01

MARKELOVA, L. P., NEMCHINOV, I. V., and SHUBADEYEVA, L. P.

"Cooling the Heated Region Formed in the Breakdown of Air Under Laser Radiation"

Moscow, Zhurnal Prikladnoy Mekhaniki i Tekhnicheskoy Fiziki, No 2, 1973, pp 54-63

Abstract: As a result of the high concentration of energy at the point of air breakdown under laser radiation, the air at that point may reach a temperature and pressure of the same order as those in the fireball of a nuclear explosion at the moment the heat wave forms the shock wave, according to the authors' calculations. In this paper, they describe a unidimensional method for computing the cooling of the breakdown point and, using numerical methods, solve the problem of whether a change in the optical thickness of the fireball leads to a sharp change in the optical phenomena and a change in the proportion of the radiated energy. At the same time, they determine the intensity and flux of the radiated energy from the fireball -- i.e., they determine the characteristics of the laser explosion as the source of optical and ultraviolet emission. For the sake of simplifying the problem,

APPROVED FOR RELEASE: 09/17/2001 CIA-RDP86-00513R002202210010-1"

"APPROVED FOR RELEASE: 09/17/2001 CIA-RDP86-00513R002202210010-1

USSR

MARKELOVA, L. P., et al, Zhurnal Prikladnoy Mekhaniki i Tekhnicheskoy Fiziki, No 2, 1973, pp 54-63

they assume that the radiation has only a slight effect on the pressure.

2/2

APPROVED FOR RELEASE: 09/17/2001 CIA-RDP86-00513R002202210010-1"

"APPROVED FOR RELEASE: 09/17/2001 CIA-RDP86-00513R002202210010-1

USSR N UDC 621.316.34.085.34

NEMCHIKOV, V., SORKIN, F.

"Electroluminescent Image Device of Increased Flexibility"

Tekhn. estetika (Technics of Aesthetics), 1970, No 2, pp 7-11 (from RZh-Elektronika i yeye primeneniye, No 6, June 1970, Abstract No 6B357)

Translation: The paper shows the possibility of using electroluminescent image devices for reproduction of diverse information. A classification of electroluminescent devices according to the principle of action and purpose is proposed. The possibility of flexibility of change of information models is also considered one of the principal requirements for image devices in general and for electroluminescent image devices in particular. The construction is considered of multipurpose indicator panels for the working positions of operators, realized on the basis of electroluminescent indicators. Summary.

1/1

APPROVED FOR RELEASE: 09/17/2001 CIA-RDP86-00513R002202210010-1"

"APPROVED FOR RELEASE: 09/17/2001 CIA-RDP86-00513R002202210010-1

USSR UDC: 518.5:681.3.06

NEMCHINOV, V. K., ROMANOV, A. N.

"Problems of Using a Normative Base in Calculating the Requirements of a Sector for Material Resources"

V sb. Teoriya i praktika mashin. obrab. ekon. inform. (Theory and Practice in Computer Processing of Economic Data--collection of works), Moscow, 1971, pp 142-159 (from RZh-Kibernetika, No 9, Sep 71, Abstract No 9V611)

[No abstract]

APPROVED FOR RELEASE: 09/17/2001 CIA-RDP86-00513R002202210010-1"

"APPROVED FOR RELEASE: 09/17/2001 CIA-RDP86-00513R002202210010-1

USSR UDC: 621.875

GANTSEV, V. A., NEMCHINOV, V. M., SIKOLENKO, S. F.

"Input Stages of DC Amplifiers Based on Unipolar Transistors"

V sb. Poluprovodn. pribory v tekhn. elektrosvyazi (Semiconductor Devices in Electrical Communications Technology--collection of works), vyp. 7, Moscow, "Svyaz'", 1971, pp 178-195 (from RZh-Radiotekhnika, No 6, Jun 71, Abstract No 6D103)

Translation: The authors consider amplification stages based on a combination of field-effect and bipolar transistors. It is shown that the temperature drift of the load current or the instability of the amplification factor can be appreciably reduced by proper selection of the parameters of the transistors and their operating conditions. A method is presented for calculating hybrid amplification stages with minimum temperature drift of the load current and high stability of the amplification factor. The results of the calculation are experimentally confirmed. Seven illustrations, three tables, bibliography of three titles.

1/1

APPROVED FOR RELEASE: 09/17/2001 CIA-RDP86-00513R002202210010-1"

"APPROVED FOR RELEASE: 09/17/2001 CIA-RDP86-00513R002202210010-1

USSR

UDC: None

SVIRINA, Ye. P., NEMCHINOV, Yu. V., and KARNEYEVA, S. S.

"Tensor Nature of the Hall Effect in Metallic Ferromagnetics"

Leningrad, Fizika Tverdogo Tela, No 6, 1973, pp 1665-1667

Abstract: The experiments described in this paper were performed to help resolve the contradictions in the literature regarding the anisotropy of the ferromagnetic Hall coefficient. The experiments consisted in measuring the Hall emf in iron silicide single crystals with 3% Si and in 50/50 iron-nickel alloys -- FeNi -- of the hypernic type. The iron single crystal was in the form of a rectangular plate measuring 20X3.5X0.4 mm, and the hypernic single crystal took the form of a parallelepiped of 15X3X2 mm. The results of the experiments are given in the form of two curves, the first showing the magnetization and the Hall emf coefficient as functions of the magnetic field intensity for the iron silicide single crystal at 20° C, the second giving the magnetization and the coefficient E_α for the spontaneous Hall field as functions of the magnetic field intensity of the hypernic crystal at the same temperature. The factor E_α appears in the tensor for the anisotropy of odd galvanomagnetic effects and is given here in matrix form. The authors

1/2

APPROVED FOR RELEASE: 09/17/2001 CIA-RDP86-00513R002202210010-1"