"APPROVED FOR RELEASE: 09/17/2001 CIA-RDP86-00513R002202220002-9

2/2 028 UNCLASSIFIED PROCESSING DATE--11DEC70

CIRC ACCESSION NO--AT0141667

ABSTRACT/EXTRACT--(U) GP-0- ABSTRACT. DETERMINATION OF IONIZATION RECOMBINATION PARAMETERS ON THE BASIS OF DATA FOR DIURNAL VARIATIONS OF THE ELECTRON CONCENTRATION IN THE F2 LAYER MAXIMUM. THE PARAMETERS WERE DETERMINED WITH THE AID OF AN ANALOG COMPUTER USED TO SOLVE A SYSTEM OF CONTINUITY EQUATIONS FOR ELECTRONS AND MOLECULAR IONS. FOR 19 POINTS WITHIN LATITUDE INTERVALS BETWEEN 30 AND 60 DEG IN THE NORTHERN AND SOUTHERN HEMISPHERES, NOONTIME IONIZATION RATES WERE DETERMINED ALONG WITH THE PRODUCT OF THE DISSOCIATION RECOMBINATION RATE AND THE MOLECULAR ION CONCENTRATION. THE PRODUCT OF THE ION MOLECULAR REACTION COEFFICIENT BY THE CONCENTRATION OF THE MOLECULAR COMPONENT CONCENTRATION WAS ALSO DETERMINED. THE MAXIMUM VALUES OF THE RECOMBINATION PARAMETERS ARE OBTAINED FOR THE INTERVAL BETWEEN 40 AND 45 DEG.

UNCLASSIFIED

APPROVED FOR RELEASE: 09/17/2001 CIA-RDP86-00513R002202220002-9"

"APPROVED FOR RELEASE: 09/17/2001 CIA-RDP86-00513R002202220002-9

Mechanical Properties

UDC 669.18-412:621.746.753

USSR

TYAGUNOV, G. V., KUSHNIR, M. N., MARTYNOV, O. V., NIKANOROVA, S. M., and BELOUSOV, V. A.

"Effect of Liquid Metal Characteristics on Solid Metal Properties"

Moscow, Stal', No 9, Sep 72, pp 803-806

Abstract: From an investigation of samples of steel 20 and technically pure iron (slabs 150 x 160 mm and hollow ingots 36[illegible]/110 mm in diameter), it was established that the mechanical properties and electric resistance of the finished metal differed substantially from section to section. Data on the chemical composition and nonmetallic impurities in different zones cannot explain these differences. The properties of liquid metal obtained by melting samples from corresponding zones also differed substantially. It is shown that a law-governed relationship exists between the properties of the liquid metal and the mechanical characteristics of the solid metal. The vacuum treatment of liquid metal leads to an increase in density and to a modification of the viscous characteristics and probably contributes to the formation of a more micro-uniform texture.

1/1

APPROVED FOR RELEASE: 09/17/2001 CIA-RDP86-00513R002202220002-9"

"APPROVED FOR RELEASE: 09/17/2001 CIA-RDP86-00513R002202220002-9

1/2 044 UNCLASSIFIED PROCESSING DATE--23OCT70

TITLE--AN AMPLIFIER OF SINGLE FREQUENCY LASER EMISSION -U-

AUTHOR-(04)-NIKASHIN, V.A., RUKMAN, G.I., SAKHAROV, V.K., TARASOV, V.K.

COUNTRY OF INFO--USSR

SOURCE--PRIBORY I TEKHNIKA EKSPERIMENTA, JAN.-FEB. 1970, P. 194, 195

DATE PUBLISHED--------70

SUBJECT AREAS--PHYSICS

TOPIC TAGS--RUBY LASER, OPTIC AMPLIFICATION, CRYSTAL OPTIC PROPERTY, LASER EMISSION COHERENCE

CONTROL MARKING--NO RESTRICTIONS

DOCUMENT CLASS--UNCLASSIFIED

PROXY REEL/FRAME--1988/1455 STEP NO--UR/0120/70/000/000/0194/0195

CIRC ACCESSION NO--AP0106211

UNCLASSIFIED

APPROVED FOR RELEASE: 09/17/2001 CIA-RDP86-00513R002202220002-9"

"APPROVED FOR RELEASE: 09/17/2001 CIA-RDP86-00513R002202220002-9

2/2 044 UNCLASSIFIED PROCESSING DATE--23OCT70

CIRC ACCESSION NO--AP0106211

ABSTRACT/EXTRACT--(U) GP-0- ABSTRACT. DESCRIPTION OF AN AMPLIFIER OF SINGLE FREQUENCY RUBY LASER EMISSION WITH A LARGE AMPLIFICATION FACTOR ACHIEVED BY TRIPLE PASSAGE OF THE BEAM TO BE AMPLIFIED THROUGH THE AMPLIFIER CRYSTAL. A MAXIMUM AMPLIFICATION FACTOR OF 24 CAN BE ATTAINED BY THIS AMPLIFIER. A BRIEF DESCRIPTION IS GIVEN OF THE SPATIAL STRUCTURE AND THE DEGREE OF COHERENCE OF THE AMPLIFIED RADIATION.

FACILITY: VSESOIUZNYI NAUCHNOLSSLEDOVATEL'SKII INSTITUT OPTIKO-FIZICHESKIKH IZMERENII, MOSCOW,, USSR.

UNCLASSIFIED

APPROVED FOR RELEASE: 09/17/2001 CIA-RDP86-00513R002202220002-9"

"APPROVED FOR RELEASE: 09/17/2001 CIA-RDP86-00513R002202220002-9

1/2 043 UNCLASSIFIED PROCESSING DATE--09OCT70

TITLE--NARROW LINE RUBY LASER -U-

AUTHOR-(05)-VINOGIN, YU.P., GNATYUK, L.N., NIKASHIN, V.A., SAKHAROV, V.K., TARASOV, V.K.

COUNTRY OF INFO--USSR

SOURCE--OPT. SPEKTROSK. 1970, 28(1), 168-70

DATE PUBLISHED--------70

SUBJECT AREAS--PHYSICS

TOPIC TAGS--RUBY LASER, MULTISTAGE LASER, LASER EMISSION COHERENCE, LASER MODULATION, LASER PULSE, LASER POWER OUTPUT

CONTROL MARKING--NO RESTRICTIONS

DOCUMENT CLASS--UNCLASSIFIED

PROXY REEL/FRAME--1984/0368 STEP NO--UR/0051/70/028/001/0168/0170

CIRC ACCESSION NO--AP0055153

UNCLASSIFIED

APPROVED FOR RELEASE: 09/17/2001 CIA-RDP86-00513R002202220002-9"

"APPROVED FOR RELEASE: 09/17/2001 CIA-RDP86-00513R002202220002-9

2/2 043 UNCLASSIFIED PROCESSING DATE--09OCT70

CIRC ACCESSION NO--AP0055153

ABSTRACT/EXTRACT--(U) GP-0- ABSTRACT. TWO LASERS WERE USED IN THE SYSTEM OPERATING STABLY IN A SINGLE FREQUENCY REGION AND THE OTHER AN OUTPUT LASER WITH A PHOTOTROPIC SHUTTER, THE INITIAL ILLUMINATION OF WHICH IS PRODUCED BY THE RADIATION OF THE 1ST LASER. THE ACTIVE ELEMENT OF THE 1ST LASER WAS A HIGHLY UNIFORM RUBY CRYSTAL WITH SAPPHIRE CAPS 12 CM LONG AND 10 CM DIAM. THE QUALITY MODULATOR WAS A SOLN. OF PHTHALOCYANINE IN PHNO SUB2. SINGLE FREQUENCY OPERATION WAS MAINTAINED BY INCREASING THE PUMPING ENERGY 10PERCENT ABOVE THAT OF THE THRESHOLD. THE CRYSTAL OF THE 2ND LASER WAS 24 CM LONG AND 16 MM DIAM. THE SYSTEM USED CAN PRODUCE A POWERFUL SINGLE PULSERADIATION OF VERY NARROW SPECTRAL COMPN.

UNCLASSIFIED

APPROVED FOR RELEASE: 09/17/2001 CIA-RDP86-00513R002202220002-9"

"APPROVED FOR RELEASE: 09/17/2001 CIA-RDP86-00513R002202220002-9

UNCLASSIFIED PROCESSING DATE--18SEP70

1/2 038

TITLE--A RUBY LASER WITH A NARROW EMISSION LINE -U-

AUTHOR-(05)-VINOGIN, YU.P., GNATYUK, L.N., NIKASHIN, V.A., SAKHAROV, V.K., TARASOV, V.K.

COUNTRY OF INFO--USSR

SOURCE--OPTIKA I SPEKTROSKOPIIA, VOL. 28, JAN. 1970, P. 168-170

DATE PUBLISHED----JAN70

SUBJECT AREAS--PHYSICS

TOPIC TAGS--RUBY LASER, LASER RADIATION, LASER EMISSION

CONTROL MARKING--NO RESTRICTIONS

DOCUMENT CLASS--UNCLASSIFIED

STEP NO--UR/0051/70/028/000/0168/0170

PROXY REEL/FRAME--1979/1676

CIRC ACCESSION NO--AP0047994

UNCLASSIFIED

APPROVED FOR RELEASE: 09/17/2001 CIA-RDP86-00513R002202220002-9"

"APPROVED FOR RELEASE: 09/17/2001 CIA-RDP86-00513R002202220002-9

2/2 038 UNCLASSIFIED PROCESSING DATE--18SEP70

CIRC ACCESSION NO--AP0047994

ABSTRACT/EXTRACT--(U) GP-0- ABSTRACT. STUDY OF THE POSSIBILITY OF CREATING A SOURCE OF FAIRLY POWERFUL MONOPULSE RADIATION OF NARROW SPECTRAL COMPOSITION. TWO GENERATORS WERE USED IN THIS STUDY: THE FIRST STABLY OPERATING IN A SINGLE FREQUENCY REGIME (ONE TRANSVERSE AND ONE LONGITUDINAL MODE), WHILE THE SECOND, THE OUTPUT GENERATOR, IS A LASER WITH A PHOTOTROPIC Q SWITCH, THE INITIAL BLEACHING OF WHICH OCCURS AS A RESULT OF THE RADIATION OF THE FIRST LASER.

UNCLASSIFIED

APPROVED FOR RELEASE: 09/17/2001 CIA-RDP86-00513R002202220002-9"

"APPROVED FOR RELEASE: 09/17/2001 CIA-RDP86-00513R002202220002-9

USSR UDC 669.861.5.864.018.58(088.8)

NIKELOV, K. P., YELYUTIN, O. P., NIKITIN, S. A., PSHECHENKOVA, G. V., SOKOLOV, V. I., TARTYNOV, V. P. [Central Scientific Research Institute for Ferrous Metallurgy imeni Bardin, Moscow University]

"A Magnetic Alloy"

USSR Author's Certificate No. 276424, Filed 21/04/69, Published 16/10/70. (Translated from Referativnyy Zhurnal Metallurgiya, No. 5, 1971, Abstract No. 5, I760P).

Translation: The alloy contains Er 40-80%, Dy 20-60%, and differs from earlier known alloys in its higher values of saturation magnetism (28,500-32,800 gauss) at cryogenic temperatures.

1/1

APPROVED FOR RELEASE: 09/17/2001 CIA-RDP86-00513R002202220002-9"

"APPROVED FOR RELEASE: 09/17/2001 CIA-RDP86-00513R002202220002-9

APPROVED FOR RELEASE: 09/17/2001 CIA-RDP86-00513R002202220002-9"

"APPROVED FOR RELEASE: 09/17/2001 CIA-RDP86-00513R002202220002-9

1/2 044 UNCLASSIFIED PROCESSING DATE--23OCT70

TITLE--AN AMPLIFIER OF SINGLE FREQUENCY LASER EMISSION -U-

AUTHOR-(01)-NIKASHIN, V.A., RUKMAN, G.I., SAKHAROV, V.K., TARASOV, V.K.

COUNTRY OF INFO--USSR

SOURCE--PRIBORY I TEKHNIKA EKSPERIMENTA, JAN.-FEB. 1970, P. 194, 195

DATE PUBLISHED--------70

SUBJECT AREAS--PHYSICS

TOPIC TAGS--RUBY LASER, OPTIC AMPLIFICATION, CRYSTAL OPTIC PROPERTY, LASER EMISSION COHERENCE

APPROVED FOR RELEASE: 09/17/2001 CIA-RDP86-00513R002202220002-9"

"APPROVED FOR RELEASE: 09/17/2001 CIA-RDP86-00513R002202220002-9

2/2 044 UNCLASSIFIED PROCESSING DATE--23OCT70

CIRC ACCESSION NO--AP0106211

ABSTRACT/EXTRACT--(U) GP-0- ABSTRACT. DESCRIPTION OF AN AMPLIFIER OF SINGLE FREQUENCY RUBY LASER EMISSION WITH A LARGE AMPLIFICATION FACTOR ACHIEVED BY TRIPLE PASSAGE OF THE BEAM TO BE AMPLIFIED THROUGH THE AMPLIFIER CRYSTAL. A MAXIMUM AMPLIFICATION FACTOR OF 24 CAN BE ATTAINED BY THIS AMPLIFIER. A BRIEF DESCRIPTION IS GIVEN OF THE SPATIAL STRUCTURE AND THE DEGREE OF COHERENCE OF THE AMPLIFIED RADIATION.

FACILITY: VSESOIUZNYI NAUCHNOLSSLEDOVATEL'SKII INSTITUT OPTIKO-FIZICHESKIKH IZMERENII, MOSCOW,, USSR.

UNCLASSIFIED

APPROVED FOR RELEASE: 09/17/2001 CIA-RDP86-00513R002202220002-9"

"APPROVED FOR RELEASE: 09/17/2001 CIA-RDP86-00513R002202220002-9

1/2 043 UNCLASSIFIED PROCESSING DATE--09OCT70

TITLE--NARROW LINE RUBY LASER -U-

AUTHOR-(05)-VINOGIN, YU.P., GNATYUK, L.N., NIKASHIN, V.A., SAKHAROV, V.K., TARASOV, V.K.

N

COUNTRY OF INFO--USSR

SOURCE--OPT. SPEKTROSK. 1970, 28(1), 168-70

DATE PUBLISHED--------70

SUBJECT AREAS--PHYSICS

TOPIC TAGS--RUBY LASER, MULTISTAGE LASER, LASER EMISSION COHERENCE, LASER MODULATION, LASER PULSE, LASER POWER OUTPUT

CONTROL MARKING--NO RESTRICTIONS

DOCUMENT CLASS--UNCLASSIFIED

PROXY REEL/FRAME--1984/0368 STEP NO--UR/0051/70/028/001/0168/0170

CIRC ACCESSION NO--AP0055153

UNCLASSIFIED

APPROVED FOR RELEASE: 09/17/2001 CIA-RDP86-00513R002202220002-9"

"APPROVED FOR RELEASE: 09/17/2001 CIA-RDP86-00513R002202220002-9

UNCLASSIFIED PROCESSING DATE--09OCT70

2/2 043

CIRC ACCESSION NO--AP0055153

ABSTRACT/EXTRACT--(U) GP-0- ABSTRACT. TWO LASERS WERE USED IN THE SYSTEM OPERATING STABLY IN A SINGLE FREQUENCY REGION AND THE OTHER AN OUTPUT LASER WITH A PHOTOTROPIC SHUTTER, THE INITIAL ILLUMINATION OF WHICH IS PRODUCED BY THE RADIATION OF THE 1ST LASER. THE ACTIVE ELEMENT OF THE 1ST LASER WAS A HIGHLY UNIFORM RUBY CRYSTAL WITH SAPPHIRE CAPS 12 CM LONG AND 10 CM DIAM. THE QUALITY MODULATOR WAS A SOLN. OF PHTHALOCYANINE IN PHNO SUB2. SINGLE FREQUENCY OPERATION WAS MAINTAINED BY INCREASING THE PUMPING ENERGY 10PERCENT ABOVE THAT OF THE THRESHOLD. THE CRYSTAL OF THE 2ND LASER WAS 24 CM LONG AND 16 MM DIAM. THE SYSTEM USED CAN PRODUCE A POWERFUL SINGLE PULSERADIATION OF VERY NARROW SPECTRAL COMPN.

UNCLASSIFIED

APPROVED FOR RELEASE: 09/17/2001 CIA-RDP86-00513R002202220002-9"

"APPROVED FOR RELEASE: 09/17/2001 CIA-RDP86-00513R002202220002-9

1/2 038 UNCLASSIFIED PROCESSING DATE--18SEP70

TITLE--A RUBY LASER WITH A NARROW EMISSION LINE -U-

AUTHOR-(05)-VINOGIN, YU.P., GNATYUK, L.N., NIKASHIN, V.A., SAKHAROV, V.K., TARASOV, V.K.

COUNTRY OF INFO--USSR

SOURCE--OPTIKA I SPEKTROSKOPIIA, VOL. 28, JAN. 1970, P. 168-170

DATE PUBLISHED----JAN70

SUBJECT AREAS--PHYSICS

TOPIC TAGS--RUBY LASER, LASER RADIATION, LASER EMISSION

CONTROL MARKING--NO RESTRICTIONS

DOCUMENT CLASS--UNCLASSIFIED

PROXY REEL/FRAME--1979/1676 STEP NO--UR/0051/70/028/000/0168/0170

CIRC ACCESSION NO--AP0047994

UNCLASSIFIED

APPROVED FOR RELEASE: 09/17/2001 CIA-RDP86-00513R002202220002-9"

"APPROVED FOR RELEASE: 09/17/2001 CIA-RDP86-00513R002202220002-9

2/2 038 UNCLASSIFIED PROCESSING DATE--18SEP70

CIRC ACCESSION NO--AP0047994

ABSTRACT/EXTRACT--(U) GP-0- ABSTRACT. STUDY OF THE POSSIBILITY OF CREATING A SOURCE OF FAIRLY POWERFUL MONOPULSE RADIATION OF NARROW SPECTRAL COMPOSITION. TWO GENERATORS WERE USED IN THIS STUDY: THE FIRST STABLY OPERATING IN A SINGLE FREQUENCY REGIME (ONE TRANSVERSE AND ONE LONGITUDINAL MODE), WHILE THE SECOND, THE OUTPUT GENERATOR, IS A LASER WITH A PHOTOTROPIC Q SWITCH, THE INITIAL BLEACHING OF WHICH OCCURS AS A RESULT OF THE RADIATION OF THE FIRST LASER.

UNCLASSIFIED

APPROVED FOR RELEASE: 09/17/2001 CIA-RDP86-00513R002202220002-9"

"APPROVED FOR RELEASE: 09/17/2001 CIA-RDP86-00513R002202220002-9

USSR UDC 669.861.5.864.018.58(088.8)

NIKELOV, K. P., YELYUTIN, O. P., NIKITIN, S. A., PSHECHENKOVA, G. V., SOKOLOV, V. I., TARTYNOV, V. P. [Central Scientific Research Institute for Ferrous Metallurgy imeni Bardin, Moscow University]

"A Magnetic Alloy"

USSR Author's Certificate No. 276424, Filed 21/04/69, Published 16/10/70. (Translated from Referativnyy Zhurnal Metallurgiya, No. 5, 1971, Abstract No. 5, I760P).

Translation: The alloy contains Er 40-80%, Dy 20-60%, and differs from earlier known alloys in its higher values of saturation magnetism (28,500-32,800 gauss) at cryogenic temperatures.

1/1

APPROVED FOR RELEASE: 09/17/2001 CIA-RDP86-00513R002202220002-9"

"APPROVED FOR RELEASE: 09/17/2001 CIA-RDP86-00513R002202220002-9

USSR UDC 669.865.866.018.58 (088.8)

NIKELOV, K. P., YELYUTIN, O. P., NIKITIN, S. A., PSHECHENKOVA, G. V., SOKOLOV, V. I., TARTYNOV, V. P. [Central Scientific Research Institute for Ferrous Metallurgy imeni Bardin, Moscow University]

"A Magnetic Alloy"

USSR Author's Certificate No. 276423, Filed 21/04/69, Published 16/10/70. (Translated from Referativnyy Zhurnal Metallurgiya, No. 5, 1971, Abstract No. 5, I759P).

Translation: The alloy contains Er 20-80%, Ho 20-80%, and differs from the earlier known Fe-Co alloy (24,600 gauss) in its higher values of saturation magnetism (28,500 - 32,800 gauss) at cryogenic temperatures.

1/1

APPROVED FOR RELEASE: 09/17/2001 CIA-RDP86-00513R002202220002-9"

"APPROVED FOR RELEASE: 09/17/2001 CIA-RDP86-00513R002202220002-9

1/2 049 UNCLASSIFIED PROCESSING DATE--27NOV70

TITLE--VOLT AMPERE CHARACTERISTICS OF AN ARGON PLASMA BEHIND A SHOCK WAVE ON GOLD ELECTRODES DURING NONINDEPENDENT DISCHARGE -U-

AUTHOR-(02)-MAKSIMOV, A.M., NIKEUV, YU.A.

COUNTRY OF INFO--USSR

SOURCE--TEPLOFIZ. VYS. TEMP. 1970, 8(2), 272-6

DATE PUBLISHED--------70

SUBJECT AREAS--PHYSICS

TOPIC TAGS--PLASMA PHYSICS, ARGON, PLASMA DISCHARGE, SHOCK WAVE FRONT

CONTROL MARKING--NO RESTRICTIONS

DOCUMENT CLASS--UNCLASSIFIED

PROXY REEL/FRAME--3005/1408 STEP NO--UR/0294/70/008/002/0272/0276

CIRC ACCESSION NO--AP0133360

UNCLASSIFIED

APPROVED FOR RELEASE: 09/17/2001 CIA-RDP86-00513R002202220002-9"

"APPROVED FOR RELEASE: 09/17/2001 CIA-RDP86-00513R002202220002-9

2/2 049 UNCLASSIFIED PROCESSING DATE--27NOV70

CIRC ACCESSION NO--AP0133360

ABSTRACT/EXTRACT--(U) GP-0- ABSTRACT. E-I CHARACTERISTICS WERE MEASURED BEHIND THE SHOCK WAVE FRONT PRODUCED BY CAPACITOR BANK DISCHARGE IN AR PLASMA. THE MEASUREMENTS WERE CARRIED OUT BY MEANS OF A DOUBLE PROBE UNDER CONDITIONS OF A NONSTATIONARY BOUNDARY LAYER IN A 3.5-M-LONG AND 50-MM-INNER-DIAM. TUBE AT 0.5-4 MM HG. UNDER CONDITIONS OF NONINDEPENDENT DISCHARGE, THESE CHARACTERISTICS WERE USED TO DET. THE ELECTRON CONCN. PROFILE BEHIND THE SHOCK WAVE FRONT. THE RESULTS WERE COMPARED WITH THOSE OBTAINED BY MICROWAVE DIAGNOSTICS. THE EXPTL. SATN. CURRENT AGREES WITH THEORY. THE ELECTRON CONCNS. WERE MEASURED FOR WHICH THE TRANSITION FROM THE NONINDEPENDENT DISCHARGE TO ARC CONDITIONS WAS OBSD. FACILITY: INST. VYS. TEMP., MOSCOW, USSR.

UNCLASSIFIED

APPROVED FOR RELEASE: 09/17/2001 CIA-RDP86-00513R002202220002-9"

"APPROVED FOR RELEASE: 09/17/2001 CIA-RDP86-00513R002202220002-9

7

UDC 591.1

USSR

NEFEDOV, V. P., SAMOYLOV, V. A., KUDYAKOVA, N. N., DUBYNIN, V. N., PETUSHKOV, V. N., YASNIKOV, I. L., NIKMAYLOV, V. I., and KHRUSTALOV, V. F., Institute of Physics imeni L. V. Kirenskiy, Siberian Department USSR Academy of Sciences

"Culturing Bone Marrow in Vitro by the Method of Isolated Organ Perfusion"

Moscow, Izvestiya Akademii Nauk SSSR, No 2, Mar/Apr 71, pp 179-191

Abstract: The role played by the bone marrow in maintaining normal erythron series was studied. Blood was perfused through the isolated sternum by means of a pumping and oxygenating system which automatically regulated the perfusion pressure, pO_2, HbO_2, pH, and temperature of the perfused blood, partly in response to the feedback information on pO_2, temperature, and impedance received from the bone marrow. Best results were obtained when the circulating blood was completely exchanged after 12 hours of perfusion. The maximum duration of perfusion was 20 hours. Histological examination of the sternum performed after 6, 11, and 17 hours of perfusion revealed a shift in the leukoerythroblast ratio toward the red series and a normal maturation of erythrocytes and granulocytes.

1/1

APPROVED FOR RELEASE: 09/17/2001 CIA-RDP86-00513R002202220002-9"

"APPROVED FOR RELEASE: 09/17/2001 CIA-RDP86-00513R002202220002-9

UNCLASSIFIED PROCESSING DATE--11SEP70

172 015

TITLE--WELDING OF MEDIUM CARBON STEELS IN CARBON DIOXIDE WITHOUT PRELIMINARY HEATING -U-

AUTHOR--NIKHINSON, YU.I., SUMVATIN, V.I.

COUNTRY OF INFO--USSR

SOURCE--SVAR. PROIZVOD. 1970, (2), 20-3

DATE PUBLISHED--------70

SUBJECT AREAS--MECH., IND., CIVIL AND MARINE ENGR

TOPIC TAGS--STEEL WELDING, CARBON STEEL, CARBON DIOXIDE ARC WELDING, WELDING ELECTRODE, METAL HEATING, METAL CRACKING/(U)45L STEEL

CONTROL MARKING--NO RESTRICTIONS

DOCUMENT CLASS--UNCLASSIFIED

PROXY REEL/FRAME--1989/1378 STEP NO--UR/0135/70/000/002/0020/0023

CIRC ACCESSION NO--AP0107851

UNCLASSIFIED

APPROVED FOR RELEASE: 09/17/2001 CIA-RDP86-00513R002202220002-9"

"APPROVED FOR RELEASE: 09/17/2001 CIA-RDP86-00513R002202220002-9

UNCLASSIFIED PROCESSING DATE--11SEP70

2/2 015

CIRC ACCESSION NO--AP0107851

ABSTRACT/EXTRACT--(U) GP-0- ABSTRACT. CRACKFREE WELDING OF STEEL 45L WITH ELECTRODES UONI-13-55 UNDER CO SUB2 REQUIRES HEATING; A METHOD WITHOUT PRELIMINARY HEATING IS DEVELOPED.

UNCLASSIFIED

APPROVED FOR RELEASE: 09/17/2001 CIA-RDP86-00513R002202220002-9"

"APPROVED FOR RELEASE: 09/17/2001 CIA-RDP86-00513R002202220002-9

Acc. Nr.: AP0046762 Ref. Code: UR0125

USSR UDC 621.791.75

NIKHINSON, YU. I., SUMYATIN, V. I., GOLEMBO, S. B., SLOBIN, B. Z., GRUDO, A. I., VAYSBURD, I. SH.

"Welding the Frame of the Self-Propelled Chassis T-16M"

Kiev, Avtomaticheskaya Svarka (Automatic Welding), No 1, 1970, pp 44-46 (from Avtomaticheskaya Svarka, No 1, 1970, p 80)

Translation: The results of selecting the technological process for welding steel 45L with an increased carbon content are discussed. It is recommended that the welding be performed in two layers without preliminary heating. There are 3 illustrations.

1/1 di 18

Reel/Frame

APPROVED FOR RELEASE: 09/17/2001 CIA-RDP86-00513R002202220002-9"

"APPROVED FOR RELEASE: 09/17/2001 CIA-RDP86-00513R002202220002-9

USSR UDC: 620.179.16

NIKIFORENKO, Zh. G., SYSKOV, V. A., KREPS, N. S., IGNATINSKIY, I. L.,
VNIINK, Kishinev

"Ultrasonic Inspection of Bilayer Plates"

Sverdlovsk, Defektoskopiya, No 3, May/Jun 71, pp 87-93

Abstract: In order to evaluate the possibility of inspecting bilayer plates by the ultrasonic reflected pulse resonance method (L. G. Merkulov, V. M. Verevkin, Defektoskopiya, 1965, No 5, p 13) when the contacting liquid can wet only one surface of the plate to feed ultrasonic oscillations into the material being inspected, the authors calculate the shape of a pulse reflected from a plate separating liquid from air, disregarding attenuation. A block diagram of the ultrasonic flaw detector is presented. The proposed device can be used to check for diffusion welds between the layers of double-layer plates. The results of experiments show that the Merkulov-Verevkon method is a sound basis for highly sensitive high-productivity flaw detection.

1/1

APPROVED FOR RELEASE: 09/17/2001 CIA-RDP86-00513R002202220002-9"

"APPROVED FOR RELEASE: 09/17/2001 CIA-RDP86-00513R002202220002-9

USSR UDC 620.179.16

[redacted], Zh. G., GLUKHOV, N. A., AVERBUKH, I. I.

"Measurement of Elastic Wave Velocity and Acoustical Anisotropy in Pla"

Defektoskopiya, No 4, 1971, pp 74-82.

Abstract: It is demonstrated theoretically that electromagnetic excitation causes longitudinal and transverse ultrasonic oscillations. A resonant method of measurement is described and a block diagram is presented of a device for measurement of elastic wave velocities and acoustical anisotropy in plates. Electromagnetic excitation of ultrasonic waves is achieved in the 1-20 MHz band. Oscillograms of resonant pulses produced in a thin, orthotropic steel plate are presented.

1/1

APPROVED FOR RELEASE: 09/17/2001 CIA-RDP86-00513R002202220002-9"

"APPROVED FOR RELEASE: 09/17/2001 CIA-RDP86-00513R002202220002-9

BIOLOGY
Agriculture

USSR

UDC 632.934.1(47+57)

MAMAYEV, K., and NIKIFOROV, A., Agronomists

"Aerosols and How They Are Applied"

Moscow, Zemledeliye, Vol 33, No 9, Sep 71, pp 52-53

Abstract: The aerosol method of disinfection of barns and granaries, and the aerosol method for control of insects in general are widely used in USSR. The main preparations used for the control of barn pests are technical grade hexachlorocyclohexane (HCCH) and its gamma-isomer, both in the form of 4% solutions in diesel oil. The preparations are converted into aerosols by means of aerosol generators AG-L6, AG-UD-2, Raketa, and OAN-P "Mikron", with AG-UD-2 the most effective. Granary disinfection is usually carried out about 10-15 days before storage of the grain, with the buildings hermetically sealed and then thoroughly ventilated. Smoke pots containing 90% of the gamma-isomer of HCCH, 200 and 500 g in weight are also used, with the smaller pots processing an area of 400 and the larger ones 1,000 cubic meters. The preparation dimethyl dichlorovinyl phosphate, a potent fungicide, is used for the control of flies.

1/1

APPROVED FOR RELEASE: 09/17/2001 CIA-RDP86-00513R002202220002-9"

"APPROVED FOR RELEASE: 09/17/2001 CIA-RDP86-00513R002202220002-9

1/3 022 UNCLASSIFIED PROCESSING DATE--13NOV70

TITLE--COMPUTATION OF STAR OPACITY WITH ALLOWANCE FOR LIGHT ABSORPTION IN SPECTRAL LINES, DETERMINING STAR OPACITY WITH ALLOWANCE FOR SPECTRAL

AUTHOR-(02)-NIKIFOROV, A.F., UVARPV, V.B.

COUNTRY OF INFO--USSR

SOURCE--MOSCOW, DOKLADY AKADEMII NAUK SSSR, VOL. 191, NO. 1, 1970, PP 47-49

DATE PUBLISHED--------70

SUBJECT AREAS--PHYSICS, ASTRONOMY, ASTROPHYSICS

TOPIC TAGS--STAR, MODEL, LIGHT ABSORPTION, SPECTRAL LINE

CONTROL MARKING--NO RESTRICTIONS

DOCUMENT CLASS--UNCLASSIFIED

PROXY REEL/FRAME--1990/0264 STEP NO--UR/0020/70/191/001/0047/0049

CIRC ACCESSION NO--AT0108571

UNCLASSIFIED

APPROVED FOR RELEASE: 09/17/2001 CIA-RDP86-00513R002202220002-9"

"APPROVED FOR RELEASE: 09/17/2001 CIA-RDP86-00513R002202220002-9

2/3 022 UNCLASSIFIED PROCESSING DATE--13NOV70

CIRC ACCESSION NO--AT0108571

ABSTRACT/EXTRACT--(U) GP-0- ABSTRACT. DATA ON THE OPACITY OF STELLAR MATTER MUST BE AVAILABLE FOR CONSTRUCTING STAR MODELS. UNTIL RECENTLY MANY AUTHORS HAVE FAILED TO TAKE THE ROSSELAND PATH INTO ACCOUNT, ALTHOUGH THE LATTER CAN BE REDUCED BY A FACTOR OF 3-5 DUE TO LINE ABSORPTION. THIS EFFECT OF DISCRETE DISCRETE TRANSITIONS ON STAR OPACITY CAN BE ATTRIBUTED TO THE PRESENCE WITHIN STARS OF ELEMENTS WITH RELATIVELY LARGER ATOMIC NUMBERS, FOR WHICH AT HIGH TEMPERATURES THERE IS A LARGER NUMBER OF STATES OF ATOMS WITH DIFFERENT DEGREES OF IONIZATION AND EXCITATION, AS WELL AS BROADENING OF SPECTRAL LINES. THE AUTHORS HAVE COMPUTED THE ROSSELAND PATH FOR A NUMBER OF ASTROPHYSICAL MIXTURES, TAKING PHOTON ABSORPTION IN SPECTRAL LINES INTO ACCOUNT. IN COMPUTING THE EFFECTIVE CROSS SECTIONS OF ABSORPTION AND SCATTERING OF PHOTONS UNDER STIPULATED PHYSICAL CONDITIONS IT IS NECESSARY TO FIND: 1) THE WAVE FUNCTIONS OF ELECTRONS OF THE DESCRETE AND CONTINUOUS SPECTRA AND THE ENERGY LEVEL OF BOUND ELECTRONS. 2) THE MEAN ELECTRON STATE OCCUPATION NUMBERS AND THE MEAN DEGREE OF IONIZATION OF MATTER. 3) THE PROBABILITY DISTRIBUTIONS OF DIFFERENT ELECTRON STATE OCCUPATION NUMBERS. 4) PROBABILITY DISTRIBUTION FOR DIFFERENT ELECTRIC FIELD STRENGTHS. 5) SPECTRAL LINE SHAPE AND POSITION. THE AUTHORS DESCRIBE HOW EACH OF THESE PROBLEMS IS SOLVED. THE THREE MOST PERTINENT PAPERS IN THE LITERATURE ARE THEN COMPARED AND CRITICIZED (A. N. COX, STARS AND STELLER SYSTEMS, 8, 195, 1965. T. R. CARSON, ET AL., MONTHLY NOTICES ROYAL. ASTR. SOC., 140, NO. 4, 483, 1968. T. R. CARSON, ET AL., MONTHLY NOTICES, 141, NO. 4, 77, 1968).

UNCLASSIFIED

APPROVED FOR RELEASE: 09/17/2001 CIA-RDP86-00513R002202220002-9"

"APPROVED FOR RELEASE: 09/17/2001 CIA-RDP86-00513R002202220002-9

3/3 022 UNCLASSIFIED PROCESSING DATE--13NOV70

CIRC ACCESSION NO--AT0108571

ABSTRACT/EXTRACT--IN THE COMPUTATION OF THE ROSSELAND PATH IN ASTROPHYSICAL MIXTURES THE AUTHORS SOMETIMES OBRAIN BALUES DIFFERING FROM CARSON'S BY A FACTOR OF MORE THAN 2 AND THEIR DATA ARE USUALLY CLOSE TO THE RESULTS OBTAINED BY COX.

UNCLASSIFIED

APPROVED FOR RELEASE: 09/17/2001 CIA-RDP86-00513R002202220002-9"

"APPROVED FOR RELEASE: 09/17/2001 CIA-RDP86-00513R002202220002-9

USSR UDC: 621.375.7

NIKIFOROV, A. N. and DETINKO, V. N.

"Regenerative Modulation Amplifier"

Kiev, Izvestiya VUZ - Radioelektronika, vol. 14, No. 5, 1971, pp 552-559

Abstract: The purpose of this paper is to demonstrate the possibility of using means other than the capacitance of reactive elements varying with the pumping voltage or signal voltage in parametric amplifiers. The authors propose the use of modulation by the signal of a capacitance in the pumping circuit as the mechanism for parametric regeneration. In this connection, the article considers the possibility of designing a regenerative modulation amplifier. Using the equivalent circuit of such an amplifier and assuming that the attenuation in the circuit is negligible compared with the resonance frequency of the circuit, the authors derive a differential equation for the oscillatory process in the tuned circuit and find an approximate solution for it. A double-tuned regenerative modulation amplifier is also examined. It is asserted that this means of amplification indicates a new possibility of regenerative amplifier design.

1/1

APPROVED FOR RELEASE: 09/17/2001 CIA-RDP86-00513R002202220002-9"

"APPROVED FOR RELEASE: 09/17/2001 CIA-RDP86-00513R002202220002-9

1/2 016 UNCLASSIFIED PROCESSING DATE--09OCT70

TITLE--EFFECT OF CASTING SHRINKAGE ON THE MECHANISM OF SCAB FORMATION -U-

AUTHOR-(03)-KIM, G.P., NIKIFOROV, A.P., CHERNOGOROV, P.V.

COUNTRY OF INFO--USSR

N

SOURCE--LITEINOE PROIZVOD. 1970, 2, 33-5

DATE PUBLISHED--------70

SUBJECT AREAS--MATERIALS, MECH., IND., CIVIL AND MARINE ENGR

TOPIC TAGS--METAL SHRINKAGE, CAST STEEL, METAL CASTING, FOUNDRY MOLD

CONTROL MARKING--NO RESTRICTIONS

DOCUMENT CLASS--UNCLASSIFIED

PROXY REEL/FRAME--1995/1374 STEP NO--UR/0128/70/002/000/0033/0035

CIRC ACCESSION NO--AP0116823

UNCLASSIFIED

APPROVED FOR RELEASE: 09/17/2001 CIA-RDP86-00513R002202220002-9"

"APPROVED FOR RELEASE: 09/17/2001 CIA-RDP86-00513R002202220002-9

2/2 016 UNCLASSIFIED PROCESSING DATE--09OCT70

CIRC ACCESSION NO--AP0116823

ABSTRACT/EXTRACT--(U) GP-0- ABSTRACT. EXPTS. HAVE BEEN CARRIED OUT WITH STEEL CASTINGS (0.3PERCENTC) OF DIFFERENT SHAPES AND CROSS SECTION AREAS, TO DET. THE EFFECT OF SHRINKAGE ON THE SURFACE PROCESSES OCCURRING DURING THE COOLING PERIOD (1200-800DEGREES) IN A SAND MOLD. AMONG OTHER FACTORS, SCAB FORMATION IS INFLUENCED BY THE TIME OF CONTACT BETWEEN THE HOT METAL AND THE MOLD SURFACE; HERE THE DIRECTION AND AMT. OF SHRINKAGE ARE IMPORTANT. THE CHARACTER OF THE SCAB FORMS AND DIFFICULTIES INVOLVED IN THEIR REMOVAL ARE DISCUSSED ON THE BASIS OF THE POSITION OF THE CASTING SURFACE UNDER CONSIDERATION, WITH RESPECT TO THE MOLD, THE CHARACTERISTICS OF THE MOLDING SAND, THE INTENSITY OF OXIDN., AND OF SILICATE FORMING PROCESSES AT THE SURFACE.

UNCLASSIFIED

APPROVED FOR RELEASE: 09/17/2001 CIA-RDP86-00513R002202220002-9"

"APPROVED FOR RELEASE: 09/17/2001 CIA-RDP86-00513R002202220002-9

USSR

UDC 539.3:534.1

GUSEV, V. B., KONEVALOV, V. S., NIKIFOROV, A. S.

"On the Dissipative Properties of a Plate Partially Faced With Vibration Absorbing Material"

V sb. Rasseyaniye energii pri kolebaniyakh mekh. sistem (Energy Scattering in the Vibrations of Mechanical Systems -- Collection of Works), Kiev, "Nauk. dumka", 1972, pp 248-250 (from RZh-Mekhanika, No 3, Mar 73, Abstract No 3V233)

Translation: The dissipative properties of a plate upon the deposition of a vibration absorbing material on a portion of its surface are investigated. The dissipative properties of a rod of finite length, a certain part of which is coated with the vibration absorbing material, are initially considered to make a qualitative evaluation of these properties. Two cases are considered, in one of which the material is applied to the middle portion of the rod symmetric with its center, and in the other the material is applied at the ends of the rod. The experimental portion was conducted on circular plates of diameter 100 cm. Rubber was used as a vibration absorbing coating.

1/2

APPROVED FOR RELEASE: 09/17/2001 CIA-RDP86-00513R002202220002-9"

"APPROVED FOR RELEASE: 09/17/2001 CIA-RDP86-00513R002202220002-9

USSR

GUSEV, V. B., et al, Rasseyaniye energii pri kolebaniyakh mekh. sistem, Kiev, "Nauk. dumka", 1972, pp 248-250

The coefficient of losses in the plate was measured under constant removal of the rubber from the surface of the plate. Measurements of the coefficient of loss were conducted by a reverberation method up to a 10-fold decrease in the amplitude of the free bending oscillations of the plate. It is pointed out that the dissipative properties of the plate at high frequencies are practically independent of the placement on it of one or another quantity (with respect to area) of vibration absorbing material. It is more reasonable to place the vibration absorbing material closer to the center of the plate to ensure the best dissipative properties of the plate at low frequencies. Yu. A. Belyayev.

2/2

APPROVED FOR RELEASE: 09/17/2001 CIA-RDP86-00513R002202220002-9"

"APPROVED FOR RELEASE: 09/17/2001 CIA-RDP86-00513R002202220002-9

USSR UDC 539.37.5

KLYAVIN, O. V., NIKIFOROV, A. V., Physicotechnical Institute imeni A. F. Ioffe, USSR Academy of Sciences

"Observation of Localized Heating of Slip Bands When Crystals are Deformed in Liquid Helium"

Moscow, Izvestiya Akademii Nauk SSSR: Ser. Fizicheskaya, Vol 37, No 11, Nov 73, pp 2411-2416

Abstract: Localized liberation of heat was observed in calcium-doped sodium chloride crystals during deformation in liquid helium from the effect of helium boiling (formation of gas bubbles) on the heated sections of the crystal surface. Heating was observed on both edge and Burgers slip bands. It was found that the slip process does not occur in all slip bands simultaneously. The short lag of bubble formation enables studying the dynamics of the slip process during crystal deformation directly in liquid helium. In principle, the bubble method is suitable for studying the elementary phenomena of plasticity of any materials (including opaque materials) at different temperatures. Liquids with appropriate thermal properties must be selected for this purpose.

1/1

APPROVED FOR RELEASE: 09/17/2001 CIA-RDP86-00513R002202220002-9"

"APPROVED FOR RELEASE: 09/17/2001 CIA-RDP86-00513R002202220002-9

USSR UDC 620.178.15.05

MIROTVORSKIY, V. S., NIKIFOROV, A. Ya., and MEDVEDITSKIY, V. V.

"Device for Measuring Hardness and Microhardness at High Temperatures"

Moscow, Zavodskaya Laboratoriya, Vol 38, No 9, 1972, pp 1144-1145

Abstract: The construction of a device for sight-measuring hardness and microhardness of materials on heating in vacuum or in a medium of purified inert gases with 5 g — 5 kg load on indenter is described by reference to its schematic drawing. The temperature of measurements, determined by the vapor pressure of metals, is for copper-base alloys ~800-900 °C and for Fe-, Ni-, and Co-base alloys ~1000-1100 °C. The working of the device, the use of special indenters, the radiative heating of the specimen with control of its surface, and the measuring of indenter impressions are discussed. The working accuracy rated for Al, Fe, and 30KhGSA and 1Kh13 steels from the relative mean square error in measuring the diagonal of one imprint, comprised

1/2

APPROVED FOR RELEASE: 09/17/2001 CIA-RDP86-00513R002202220002-9"

"APPROVED FOR RELEASE: 09/17/2001 CIA-RDP86-00513R002202220002-9

USSR

MIROTVORSKIY, V. S., et al., Zavodskaya Laboratoriya, Vol 38, No 9, 1972, pp 1144-1145

±2.3-4.2 % for the described device and ±1.4 % and ±3.1 % for two other units. Hardness factors (185-192 kg/mm^2), determined on different units, and the relative mean square errors in measuring the imprint diagonals on steels (2-5 %) showed a good correlation. One figure, five bibliographic references.

2/2

APPROVED FOR RELEASE: 09/17/2001 CIA-RDP86-00513R002202220002-9"

"APPROVED FOR RELEASE: 09/17/2001 CIA-RDP86-00513R002202220002-9

1/2 030 UNCLASSIFIED PROCESSING DATE--30OCT70

TITLE-- E SIGNIFICANCE OF STUDIES OF THE EYE GROUND IN HEMORRHAGIC STRO -U-

AUTHOR-(03)-VISHNEVSKAYA, YE.S., NIKIFOROV, B.M., TEPLITSKIY, F.S.

COUNTRY OF INFO--USSR

SOURCE--ZHURNAL NEVROPATOLOGII I PSIKHIATRII IMENI S. S. KORSAKOVA, 1970, VOL 70, NR 6, PP 820-824

DATE PUBLISHED--------70

SUBJECT AREAS--BIOLOGICAL AND MEDICAL SCIENCES

TOPIC TAGS--BRAIN, HEMORRHAGE, EYE, ANEURYSM, BLOOD PRESSURE, DIAGNOSTIC MEDICINE

CONTROL MARKING--NO RESTRICTIONS

DOCUMENT CLASS--UNCLASSIFIED

PROXY REEL/FRAME--3001/0920 STEP NO--UR/0246/70/070/006/0820/0824

CIRC ACCESSION NO--AP0126579

UNCLASSIFIED

APPROVED FOR RELEASE: 09/17/2001 CIA-RDP86-00513R002202220002-9"

"APPROVED FOR RELEASE: 09/17/2001 CIA-RDP86-00513R002202220002-9

2/2 030 UNCLASSIFIED PROCESSING DATE--30OCT70

CIRC ACCESSION NO--AP0126579

ABSTRACT/EXTRACT--(U) GP-0- ABSTRACT. THE PAPER DEALS WITH THE STUDY OF THE EYE GROUND IN 584 PATIENTS WITH HEMORRHAGIC STROKES WITH DIFFERENT LOCALIZATIONS: IN THE HEMISPHERES, CEREBELLUM, THE STEM, AND THE SUBARACH NOID SPACE. IN 86 CASES (14.7PERCENT) THERE WERE CHANGES IN THE EYE GROUND: IN 9PERCENT THERE WAS CONGESTION, IN 3.6PERCENT, HEMORRHAGES AND IN 2PERCENT, CONGESTION WITH FOCI OF HEMORRHAGES. SYMPTOMS OF CONGESTION WERE MORE FREQUENTLY SEEN IN HEMORRHAGES OF THE SUBARACHNOID SPACE, DUE TO A RUPTURE OF THE ANEURYSMS AND IN HEMORRHAGES. SYMPTOMS OF CONGESTION WERE MORE FREQUENTLY SEEN IN HEMORRHAGES OF THE SUBARACHNOID SPACE, DUE TO A RUPTURE OF THE ANEURYSMS AND IN HEMORRHAGES INTO THE CEREBELLUM. THE HEMORRHAGES INTO THE EYE GROUND WERE USUALLY DEPICTED IN RUPTURES OF THE ANEURYSMS IN THE ANTERIOR PART OF THE CIRCLE OF WILLIS ADN DID NOT DEPEND UPON THE STATE OF ARTERIAL PRESSURE. FOR PURPOSES OF DIAGNOSIS AND PROGNOSIS HEMORRHAGES INTO THE EYE GROUND WERE MORE IMPORTANT THAN SYMPTOMS OF PAPILLA EDEMA. FACILITY: PEDIATRICHESKOGO MEDITSINSKOGO INSTITUTA, LENINGRAD.

UNCLASSIFIED

APPROVED FOR RELEASE: 09/17/2001 CIA-RDP86-00513R002202220002-9"

"APPROVED FOR RELEASE: 09/17/2001 CIA-RDP86-00513R002202220002-9

Acc. Nr: AP0047173 Ref. Code: UR 0246

PRIMARY SOURCE: Zhurnal Nevropatologii i Psikhiatrii, 1970, Vol 70, Nr 2, pp 207-212

THROMBOSIS OF SACCULAR ANEURYSMS FOLLOWING SUBARACHNOIDAL PARENCHYMATOUS HEMORRHAGES

B. M. Nikiforov

The author conducted an ipsi- and bilateral carotid angiography in 306 patients with spontaneous subarachnoidal hemorrhages. In 162 cases it was possible to demonstrate saccular aneurysms of the anterior part of the cicle of Willis. In the group of patients with the normal arterial pressure these changes were seen in 57.1%, while as in patients with hypertensive disease — in 42.6% of the cases. In 12 of the studied cases with the normal arterial pressure angiographicalli the aneurysm was not seen and subsequently during surgery or on postmortem examination it was found thrombosed. One of the reasons why the contrast does not fill the sac aneurism following subarachnoidal hemorrhages is that the cavity of the sac is thrombiosd, especially the area of the anterior communicating artery.

2

REEL/FRAME
19790668

APPROVED FOR RELEASE: 09/17/2001 CIA-RDP86-00513R002202220002-9"

"APPROVED FOR RELEASE: 09/17/2001 CIA-RDP86-00513R002202220002-9

Acc. Nr: AP0049048 Ref. Code: UR0357

PRIMARY SOURCE: Vestnik Oftal'mologii, 1970, Nr 1, pp 58-60

AN ABSCESS AT THE ROOT OF THE FRONTAL LOBE FOLLOWING PENETRATING WOUND OF THE ORBIT

B. M. Nikiforov, S. M. Chutko, T. G. Shchedrina

Summary

A case of penetrating wound of the orbit with its osteal fragment entering the frontal lobe, followed by the development of an abscess and its successful surgical treatment, is reported. In the diagnosis of complicated penetrating wounds of the orbit roentgenological examination and cerebrospinal fluid findings obtained by an early lumbar puncture are of major importance.

REEL/FRAME
19800834

APPROVED FOR RELEASE: 09/17/2001 CIA-RDP86-00513R002202220002-9"

"APPROVED FOR RELEASE: 09/17/2001 CIA-RDP86-00513R002202220002-9

USSR UDC 669.184.266:14.018.2

KACHUR, B.K., KUKURUZNYAK, I.S., NIKIFOROV, B.V., TARAPUROV, N.P., UMNOV, V.D. POGORELYY, V.P., GALATON, YE.G., KHARCHENKO, B.V., and PLOKHIKH, V.A. (Ukrainian Scientific Research Institute of Metals, Krivoy Rog Metallurgical Plant)

"Smelting of Low-Alloy Steel in a 130-ton Converter"

Moscow, Metallurg, No 9, Sep 71, pp 14-16

Abstract: A description is given of the technology of smelting low-alloy steels (OST-1, OST-2, 25G2C, and 35GC) in 130-ton oxygen converters at the Krivoy Rog Metallurgical Plant. Pig iron (881 kg per ton of steel) containing 0.6-0.9% Mn, 0.4-0.8% Si, not more than 0.06% S, and not more than 0.1% P, is poured into the converter at 1250-1350°C. Fresh burnt lime (65 kg), limestone (15-20 kg), and fluorspar (2-5 kg) per ton of steel were used as slag forming materials. The use of liquid alloying elements (75% FeMn, 65% FeSi and SiMn) in the ladle makes it possible to reduce the expenditure of ferroalloys, to improve the macro- and microstructure of the metal, and to minimize the content of nonmetallic inclusions. The steel obtained satisfies the requirements of GOST 5058-65.

1/1

APPROVED FOR RELEASE: 09/17/2001 CIA-RDP86-00513R002202220002-9"

"APPROVED FOR RELEASE: 09/17/2001 CIA-RDP86-00513R002202220002-9

1/2 007 UNCLASSIFIED PROCESSING DATE--30OCT70

TITLE--EXPERIMENTAL OPERATION OF A 55 TON CONVERTER WITH INCREASED INTENSITY OF BLOWING -U-

AUTHOR--NIKIFOROV, B.V.

COUNTRY OF INFO--USSR

SOURCE--SAL' 1970, 30(3), 215-18

DATE PUBLISHED--------70

SUBJECT AREAS--MATERIALS, MECH., IND., CIVIL AND MARINE ENGR

TOPIC TAGS--METAL OXYGEN CONVERTER, STEEL MANUFACTURE PROCESS

CONTROL MARKING--NO RESTRICTIONS

DOCUMENT CLASS--UNCLASSIFIED

PROXY REEL/FRAME--1996/1992 STEP NO--UR/0133/70/030/003/0215/0218

CIRC ACCESSION NO--AP0118951

UNCLASSIFIED

APPROVED FOR RELEASE: 09/17/2001 CIA-RDP86-00513R002202220002-9"

"APPROVED FOR RELEASE: 09/17/2001 CIA-RDP86-00513R002202220002-9

2/2 007 UNCLASSIFIED PROCESSING DATE--30OCT70

CIRC ACCESSION NO--AP0118951

ABSTRACT/EXTRACT--(U) GP-0- ABSTRACT. AN INCREASE OF THE BLOWING RATE WITHOUT SPITTING AND EJECTIONS WAS SOUGHT BY USING TUYERES WITH 2 CONCENTRIC CIRCLES OF NOZZLES, EACH CIRCLE BEING FED WITH AN INDEPENDENT O SUPPLY THEIR INNER RING HAD 4, 5, AND 8 NOZZLES AND THE OUTER 4 AND 8, THE INCLINATION OF WHICH IN THE INNER RING VARIED 2.5-8DEGREES AND IN THE OUTER 12-21DEGREES, THE FLARE BEING, RESP., 4 AND 6DEGREES. THEIR PERFORMANCE UNDER DIFFERENT CONDITIONS IS DESCRIBED. A TUYERE WITH 4 AND 4 NOZZLES INCLINED, RESP., 7 AND 21DEGREES TO THE VERTICAL, 14DEGREES TO EACH OTHER, AND HAVING 22 AND 33 MM DIAM. WAS THE BEST. IT PERMITTED RAISING BLOWING RATE FROM 2.8-3 TO 5-6 M PRIME3 TON WITHOUT HURTING REFRACTORIES AND LASTED 139 BLOWS. FACILITY: INST. CHERN. MET., DNEPROPETROVSK, USSR.

UNCLASSIFIED

APPROVED FOR RELEASE: 09/17/2001 CIA-RDP86-00513R002202220002-9"

"APPROVED FOR RELEASE: 09/17/2001 CIA-RDP86-00513R002202220002-9

N

Foundry

USSR

UDC 669.185.1

~~NIKIFOROV, B.~~ V., SMOKTIY, V. V., GUL'YEV, G. F., ORLOV, V. S., SIZENKO, A. S., SAFRONOV, YU. YA., KOLESNIK, V. D., BASHMAKOV, YU. V., RUDNITSKIY, YA. N., FAYERSHTEYN, A. D., KAGAN, I. I., Institute of Ferrous Metallurgy in Dnepropetrovsk and Krivoy Rog Metallurgical Plant

"Operating Experience With a 55-Ton Converter With Increased Blowing Rate"

Moscow, Stal', No 3, Mar 70, pp 215-218

Abstract: Metallurgists of the Institute of Ferrous Metallurgy in Dnepropetrovsk and Krivoy Rog Metallurgical Plant have developed a technique for smelting in 55-ton converters with the oxygen feed rate almost doubled from 2.8-3 to 5-6 cu m/t per minute. A new-type tuyere is used, the nose of which has two rows of concentrically arranged nozzles with independent oxygen feed to each row. The increased blowing rate improves slag formation. The yield of acceptable product and the degree of improvement in slag formation are determined by the structural characteristics of the noses. Nose No. 5 was found to be

1/2

APPROVED FOR RELEASE: 09/17/2001 CIA-RDP86-00513R002202220002-9"

"APPROVED FOR RELEASE: 09/17/2001 CIA-RDP86-00513R002202220002-9

USSR

NIKIFOROV, B. V., et al., Stal', No 3, Mar 70, pp 215-218

the most effective of all those tested. The use of a tuyere with nose No. 5 reduces the blowing time by 40 percent and increases converter productivity by 20.5 percent. Steels K St. 5sp, K St. 3sp, 35GS, K St. 5 ps, K St. 3ps, K St.0m, 08kp, 10kp, K2, K3, KExp., K3khr, T, and Sv-08A were obtained without any decrease in the yield of acceptable product, deterioration of metal quality, or decrease in refractory lining resistance. In newly designed shops provision should be made for a gas circuit capacity and oxygen feed system sufficient for the operation of converters with a blowing rate of 5-6 cu m/(t. min).

2/2

APPROVED FOR RELEASE: 09/17/2001 CIA-RDP86-00513R002202220002-9"

"APPROVED FOR RELEASE: 09/17/2001 CIA-RDP86-00513R002202220002-9

USSR UDC: 621.397

NIKIFOROV, D. D., SOLNTSEV, A. A., LIFSHITS, M. A., YEFIMOV, I. I.

"A Device for Measuring the Time Interval Between the Midpoints of Video Pulses"

USSR Author's Certificate No 275851, filed 15 Jul 67, published 13 Oct 70 (from RZh-Radiotekhnika, No 5, May 71, Abstract No 5G69 P)

Translation: The device is designed for measuring the time interval between the midpoints of video pulses in two sequences of identical frequency where the relative phase shift between sequences is such that the pulses of one sequence are within the limits of the pulses of the other sequence. The device contains time interval meters, and registration units, and is distinguished by the fact that measurement precision is improved by connecting the inputs of the device through differentiating links and a commutator to the inputs of the above-mentioned time interval meters. The outputs of these meters are connected thorugh flip-flops to the registration unit.

1/1

APPROVED FOR RELEASE: 09/17/2001 CIA-RDP86-00513R002202220002-9"

"APPROVED FOR RELEASE: 09/17/2001 CIA-RDP86-00513R002202220002-9

1

USSR UDC: 662.998:536.4

BLAGINYA, F. V., KISELEV, G. A., KUTS, S. M., NIKIFOROV, D. S., and SHADRIN, Yu. A.

"Equipment for Investigating the Thermophysical Characteristics of Materials by Quasi-Stationary Methods"

Novosibirsk, Izvestiya Sibirskogo Otdeleniya Akademii Nauk SSSR--Seriya Tekhnicheskikh Nauk, No 3, 1972, pp 39-43

Abstract: Two types of devices are described for investigating the thermophysical characteristics of heat-insulating materials by the complex quasi-stationary method in a broad temperature range and with the dependence of the characteristics on the temperature taken into account. In addition, a system has been developed for automatically controlling the temperature in these devices by realizing the condition for the quasi-stationary mode in the 77-2000° K range. The devices are of the plane and cylindrical types, the cross sectional diagrams of each being given. Also shown is the block diagram of the equipment for programmed automatic control, in which high-accuracy temperature regulator blocks of the VRT-2 type are used. The authors are connected with the Institute of Theoretical and Applied Mechanics, in Novosibirsk.

1/1

APPROVED FOR RELEASE: 09/17/2001 CIA-RDP86-00513R002202220002-9"

"APPROVED FOR RELEASE: 09/17/2001 CIA-RDP86-00513R002202220002-9

USSR UDC 621.791.052.011

NIKIFOROV, F. D., Doctor of Technical Sciences, Moscow Aviation Technology Institute imeni K. E. Tsiolkovskiy

"Effect of Interface Defects on the Liberation of Dissolved Gas Bubbles"

Moscow, Svarochnoye Proizvodstvo, No 2, Feb 74, pp 50-52

Abstract: An attempt was made to evaluate the stimulating action of interface defects on the formation of a gas phase nucleus in a liquid. From mathematical and geometrical analysis it was shown that defects with a positive curvature (protuberances) render the least stimulating effect on formation of gas-phase nuclei in comparison with a plane interface with the same wetting angles. Defects in the form of conical depressions (cracks) with converging walls are stimulators for the formation of stable gas-phase nuclei for a wetting angle greater than 90°. Defects in the form of channels with parallel walls render a stimulating action on generation of stable gas-phase nuclei when the wetting angle is greater than 90°. The stimulating action of these defects on the formation of stable nuclei is intensified upon increasing the wetting angle and decreasing the channel radius or distance between the walls of cracks which are plane capillaries. Five figures.

1/1

APPROVED FOR RELEASE: 09/17/2001 CIA-RDP86-00513R002202220002-9"

"APPROVED FOR RELEASE: 09/17/2001 CIA-RDP86-00513R002202220002-9

1/2 030 UNCLASSIFIED PROCESSING DATE--23OCT70

TITLE--EFFECT OF SUBSTITUENTS ON THE REACTIVITY OF AROXYL RADICALS WITH DI,TERT,BUTYL PEROXIDE -U-

AUTHOR-(04)-PROKOFYEV, A.I., SOLODOVNIKOV, S.P., NIKIFOROV, G.A., YERSHOV, V.V.

COUNTRY OF INFO--USSR

SOURCE--IZV. AKAD. NAUK SSSR, SER KHIM. 1970, (3), 558-61

DATE PUBLISHED--------70

SUBJECT AREAS--CHEMISTRY

TOPIC TAGS--REACTION KINETICS, ORGANIC PEROXIDE, BENZENE DERIVATIVE, CHEMICAL REACTION RATE, ELECTRON THEORY, ACTIVATION ENERGY, FREE RADICAL

CONTROL MARKING--NO RESTRICTIONS

DOCUMENT CLASS--UNCLASSIFIED

PROXY REEL/FRAME--2000/0742 STEP NO--UR/0062/70/000/003/0558/0561

CIRC ACCESSION NO--AP0124412

UNCLASSIFIED

APPROVED FOR RELEASE: 09/17/2001 CIA-RDP86-00513R002202220002-9"

"APPROVED FOR RELEASE: 09/17/2001 CIA-RDP86-00513R002202220002-9

2/2 030 UNCLASSIFIED PROCESSING DATE--23OCT70

CIRC ACCESSION NO--AP0124412

APPROVED FOR RELEASE: 09/17/2001 CIA-RDP86-00513R002202220002-9"

"APPROVED FOR RELEASE: 09/17/2001 CIA-RDP86-00513R002202220002-9

USSR

UDC 621.791.011.001.5

NIKIFOROV, G. D., Doctor of Technical Sciences, Moscow Aviation Technology Institute

"Effect of Finished Contact Surfaces on the Liberation of Dissolved Gas Bubbles"

Moscow, Svarochnoye Proizvodstvo, No 11, 1973, pp 46-49

Abstract: An attempt was made to produce an equation for evaluating the conditions of gas bubble nucleation. It was found that the process limiting liberation of dissolved gas in the form of bubbles is the formation of stable nuclei of the gas phase in the liquid phase. On the basis of thermodynamic analysis an equation was obtained which makes it possible to evaluate the probability of formation of stable gas-phase nuclei for both homogeneous and heterogeneous nucleation with consideration of the boundary angle of wetting of the contact surface by the liquid. 7 figures, 3 bibliographic references.

1/1

APPROVED FOR RELEASE: 09/17/2001 CIA-RDP86-00513R002202220002-9"

"APPROVED FOR RELEASE: 09/17/2001 CIA-RDP86-00513R002202220002-9

Welding

USSR

UDC 621.791.754:621.762(669.71)

OL'SHANSKIY, A. N., D'YACHENKO, V. V., Candidates of Technical Sciences, and NIKIFOROV, G. D., Doctor of Technical Sciences

"Arc Welding SAP Materials Under High-Pressure Inert Gas"

Moscow, Svarochnoye Proizvodstvo, No 7, Jul 73, pp 16-18

Abstract: SAP materials have poor weldability due to formation of pores during the welding process. Experiments were conducted to reduce the number of pores by varying the inert gas content and gas pressure. Gas contents used were (in $cm^3/100$ g): 16-18 for SAP-1, 6-8 for SAP-1a, and 1 for SAP-1s with pressures ranging from 0.2 to 11 atm. It was found that the tensile strength of the weld joint increases proportionately with increased atmospheric pressure. Although the SAP-1 base metal has a larger tensile strength than SAP-1a and SAP-1s, the weld joint strength of the latter two SAP materials is higher than that of SAP-1. At a pressure of 11 atm the tensile strength of SAP-1s is 85% of the base metal strength, SAP-1a is 89%, and SAP-1 is 66%. Thus, it is pointed out that SAP materials should not be vacuum welded. 4 figures, 1 table.

1/1

APPROVED FOR RELEASE: 09/17/2001 CIA-RDP86-00513R002202220002-9"

"APPROVED FOR RELEASE: 09/17/2001 CIA-RDP86-00513R002202220002-9

USSR

UDC 621.791.053.01:669.017.3:669.71+621.762

KOCHETKOV, P. G., Candidate of Engineering Sciences, and NIKIFOROV, G. D., Doctor of Engineering Sciences, Moscow Aviation Technology Institute

"Effect of Structure and Gases Contained in Sintered Aluminum Powder on Weld Bath Forming"

Moscow, Svarochnoye Proizvodstvo, No 3, Mar 73, pp 27-28

Abstract: A study was made of the effect of structure and gases in sintered aluminum powder (SAP) on weld seam formation. A complex composition of mixtures exist in SAP of different gas sources from complex hydroxide films on the particles, bubbles, moisture, and aluminum stearire and stearates which amount to 200-250 $cm^2/100g$ in the initial material. It was established that satisfactory weldability of SAP can be achieved by two means: use of increased pressures during welding or complete degassing of the material. The first one is the most complex. It has been associated with the use of specialized equipment and does not ensure stable weld joint properties because the causes of porosity are not eliminated, the liberation of gases being only suppressed during the welding process. The second method, associated with total degassing of the material, can be promoted by the use of a specified technology of SAP

1/2

APPROVED FOR RELEASE: 09/17/2001 CIA-RDP86-00513R002202220002-9"

"APPROVED FOR RELEASE: 09/17/2001 CIA-RDP86-00513R002202220002-9

USSR

KOCHETKOV, P. G., and NIKIFOROV, G. D., Svarochnoye Proizvodstvo, No 3, Mar 73, pp 27-28

treatment. In this case the problem of selecting the most practical temperature-time mode of briquette annealing should be solved and measures undertaken to control gas content at the different stages of semi-finished producted manufacture. 5 figures, 2 tables, 3 bibliographic references.

2/2

APPROVED FOR RELEASE: 09/17/2001 CIA-RDP86-00513R002202220002-9"

"APPROVED FOR RELEASE: 09/17/2001 CIA-RDP86-00513R002202220002-9

USSR

Nikiforov, G. D.

"Metallurgy of Fusion Welding of Aluminum Alloys"

Metallurgiya svarki plavleniyem alyuminiyevykh splavov [English version above], Mashinostroyeniye Press, Moscow, 1972, 264 pp.

Translation of Foreword: The broad introduction of aluminum alloys as structural materials has required improvement of methods for welding them. Point and roller welding and the methods of gas and manual arc welding used earlier were incapable of assuring the production of welded structures of aluminum alloys on the required scale. This limited the manufacture of aluminum structures by welding for some time.

The creation and development of methods of argon-arc welding, significantly simplifying the process of production of joints of aluminum alloys, allowed the problem of fusion welding of these alloys to be solved. Equipping enterprises with specialized equipment for argon-arc welding facilitated mass production of welded structures of aluminum alloys.

As aluminum alloys began to be used for the manufacture of vital structures, requirements for joint quality and reliability increased. Therefore, the problem of production welded joints of aluminum alloys capable of sealing in a deep vacuum, showing

APPROVED FOR RELEASE: 09/17/2001 CIA-RDP86-00513R002202220002-9"

"APPROVED FOR RELEASE: 09/17/2001 CIA-RDP86-00513R002202220002-9

1/6

USSR

Nikiforov, G. D., Metallurgiya svarki plavleniyem alyuminiyevykh splavov, Mashinostroyeniye Press, Moscow, 1972, 264 pp.

high strength under complex loading conditions, resistance to corrosion with extended contact with corrosive media, etc., is an important problem. The production of joints meeting these high requirements demands well thought-out technologies, based on a deep understanding of the metallurgical processes occurring during welding of aluminum and its alloys.

Therefore, the present monograph turns primary attention to the metallurgical peculiarities of fusion welding of aluminum alloys; processes occurring in zones around seams; analysis of factors involved in the development of defects in welded joints; and determination of technological measures designed to prevent them.

As the monograph was being written, materials from research performed by the author and his colleagues at the welding laboratory of the Moscow Aviation Technological Institute were widely used.

2/6

APPROVED FOR RELEASE: 09/17/2001 CIA-RDP86-00513R002202220002-9"

"APPROVED FOR RELEASE: 09/17/2001 CIA-RDP86-00513R002202220002-9

USSR

Nikiforov, G. D., Metallurgiya svarki plavleniyem alyuminiyevykh splavov, Mashinostroyeniye Press, Moscow, 1972, 264 pp.

Table of Contents

Foreword 3

Chapter I. Aluminum and its Alloys 5

Important Properties of Aluminum 5
Evaluation of Aluminum and its Alloys as Structural Material 9
Classification and Characteristics of Commercial Aluminum Alloys 12

Chapter II. Metallurgical Peculiarities of the Welding of Aluminum and its Alloys 21

Metallurgical Processes Occurring in the Welding Bath 21
Interaction of Aluminum and its Alloys with Oxygen 21
Activity of Aluminum for Oxygen and Important Properties of Oxide Films 21
Mechanism of Oxidation of Aluminum and Modification of Oxides Formed 28
Oxidation of Aluminum Alloys 35
Influence of Oxide Films on Melting and Transfer of Filler Metals 39
Breakup and Removal of Oxide Film Under Welding Conditions 42
Interaction of Aluminum with Nitrogen and Complex Gases 44
46

3/6

APPROVED FOR RELEASE: 09/17/2001 CIA-RDP86-00513R002202220002-9"

"APPROVED FOR RELEASE: 09/17/2001 CIA-RDP86-00513R002202220002-9

USSR

Nikiforov, G. D., Metallurgiya svarki plavleniyem alyuminiyevykh splavov, Mashinostroyeniye Press, Moscow, 1972, 264 pp.

Interaction of Aluminum with Hydrogen	46
Dissolution of Hydrogen in Aluminum	46
Liberation of Hydrogen as Bubbles	50
Degassing of Liquid Metal	62
Interaction of Hydrogen During Welding	70
Crystallization of Seam Metal and Formation of Hot Cracks	73
Peculiarities of Crystallization	73
Formation of Hot Cracks	79
Prevention of Hot Cracks and Selection of Filler Metal	84
Chapter III. Defects in Seam Metal	89
Methods and Apparatus for Determination of Hydrogen Content	89
Determination of Hydrogen Content by Vacuum Extraction	89
Determination of Dissolved Hydrogen Content	94
Hydrogen Dissolved in AMg6 Alloy	104
Hydrogen Contained in Closed Pores	111

4/6

APPROVED FOR RELEASE: 09/17/2001 CIA-RDP86-00513R002202220002-9"

"APPROVED FOR RELEASE: 09/17/2001 CIA-RDP86-00513R002202220002-9

USSR

Nikiforov, G. D., Metallurgiya svarki plavleniyem alyuminiyevykh splavov, Mashinostroyeniye Press, Moscow, 1962, 264 pp.

Probable Sources and Methods of Penetration of Hydrogen to Welding Bath 120
Distribution of Hydrogen in Seam Metal Between Pores and Solution 135
Methods of Preventing Pore Formation in Seam Metal During Welding of Aluminum 140
Peculiarities of Formation and Development of Pores During Welding of Aluminum-Magnesium Alloys
Methods of Preventing Development of Pores in Seam Metal During Welding of AMg6 Alloy 148
Methods of Locating Oxide Inclusions in Seam Metal 157
Conditions and Reasons for Appearance of Oxide Inclusions in Seam Metal 172
Reducing the Number of Oxide Inclusions in Seam Metal 177
179
Chapter IV. Processes in Near-Seam Zones Occurring During Welding 189
Distribution of Heat During Welding of Aluminum Alloys 189
Processes in Near-Seam Zones During Welding of Deformable Alloys Not Hardened by Heat Treatment 192
Influence of Hydrogen Contained in Metal of Semifinished Goods on Foaming and Development of Defects 193
Processes in Near-Seam Zones Occurring During Welding of Deformable Aluminum Alloys Hardened by Heat Treatment 210
Processes Occurring During Heat Treatment of Aluminum-Copper Alloy 210

5/6

APPROVED FOR RELEASE: 09/17/2001 CIA-RDP86-00513R002202220002-9"

"APPROVED FOR RELEASE: 09/17/2001 CIA-RDP86-00513R002202220002-9

USSR

Nikiforov, G. D., Metallurgiya svarki plavleniyem alyuminiyevykh splavov, Mashinostroyeniye Press, Moscow, 1972, 264 pp.

Processes in Near-Seam Zones Occurring During Welding of Alloy of Aluminum with 4% Cu 216
Processes Occurring in Near-Seam Zones During Welding of Duraluminum 223

Chapter V. Behavior of SAP Material During Fusion Welding 227

Technology of Manufacture and Basic Properties of SAP 227
Peculiarities of Behavior of SAP During Welding 231
Structure of SAP 231
Sources of Gases Contained in SAP 244
Influence of Structure and Gases in SAP on Formation of Welding Bath 247
Weldability of SAP 251
Structure and Properties of Welded Joints of SAP-1S 255

Bibliography 259

6/6

APPROVED FOR RELEASE: 09/17/2001 CIA-RDP86-00513R002202220002-9"

"APPROVED FOR RELEASE: 09/17/2001 CIA-RDP86-00513R002202220002-9

USSR UDC 621.791.053:669.295:620.192.47

NIKIFOROV, G. D., Doctor of Technical Sciences, and REDCHITS, V. V., Engineer, Moscow Aviation Technological Institute

"Mechanism of Pore Formation in the Welding of Titanium Alloys"

Moscow, Svarochenoye Proizvodstvo, No 3, Mar 71, pp 49-51

Abstract: Samples of OT-4 titanium alloy were argon-arc welded with direct polarity d-c current with a tungsten electrode (without filler wire) in a pulsed-arc mode. Pulse time was in the limits of 0.8-1.12 seconds. It was determined that the main reason of pore formation in OT-4 alloy (and other titanium alloys) is hydrogen, which forms by the decomposition of moisture. In welding titanium alloys the process of metal bath degassing occurs in several stages and is characterized by the presence of peaks in the surve for the relationship of weld seam porosity to current pulse duration. By improving the quality of end surface preparation prior to welding the porosity in weld seams is significantly reduced.

1/1

APPROVED FOR RELEASE: 09/17/2001 CIA-RDP86-00513R002202220002-9"

"APPROVED FOR RELEASE: 09/17/2001 CIA-RDP86-00513R002202220002-9

Transformation and Structure

USSR

UDC 620.186:669.71'3

ZYABREVA, L. N., NIKIFOROV, G. D. and KOLACHEV, B. A., Moscow Aviation Technological Institute

"Structural Changes and Phase Transformations in Welded Joints of Aluminum Alloy With 4% Copper"

Moscow, Metallovedeniye i termicheskaya obrabotka metallov, No 2, 1972, pp 75-76

Abstract: Described is a study on structural changes and phase transformations occurring in Al-4% Cu alloy under the thermal cycle of welding. During welding each volume of metal is heated up to certain limit temperatures reflected in five characteristic structural sections which had been heated to different temperatures ranging from 150°C (zone decay stage) to 640°C (liquidus stage). The detailed changes in each section indicate the possibility of changing the width of the structural sections by varying the thermal welding cycle. A 30% addition of sintered aluminum powder promotes diffusion processes in the metal and precludes grain disintegration which will, in turn, eliminate the major cause of deterioration of the mechanical properties in the heat-affected zone. (1 illustration).

1/1

APPROVED FOR RELEASE: 09/17/2001 CIA-RDP86-00513R002202220002-9"

"APPROVED FOR RELEASE: 09/17/2001 CIA-RDP86-00513R002202220002-9

USSR

NIKIFOROV, G.D., Head Welding Faculty, Moscow Aviation Technological Institute

"Welding With Simple Light -- A New Achievement in Domestic Machine Building Technology"

Moscow, Znaniye-Sila, No 6, Jun 71, p 10

Abstract: Recently Professor K. P. Stanyukovich, together with Candidate of Physical and Mathematical Sciences M. K. Kiselevyy and Engineers A. I. Polyarnyy, R. A. Klimkiniy, and A. A. Chislovyy invented a solar welding unit to be used by cosmonauts who will install it in orbital stations. The unit itself is a capsule made of a thin elastic film and equipped with a miniature gas bottle. A cosmonaut can press a button which activates a valve and the capsule, being filled with gas, is converted into a lenticular bottle. One wall of this bottle is transparent while the other is coated with a fine, mirror-like layer and can focus solar rays. The principal advantages of the bottle-reflector are that it is exceptionally light in weight and is independent of the space capsule's power supply. A prototype of the light (solar) welding unit was built using a zenon lamp as the light source. The lamp, elliptical mirror, and lenses were placed in a cone-shaped affair to collect and focus the light. It is said that this apparatus produces more continuous radiation than a laser and has been used to weld steel, aluminum, and titanium.

1/1

APPROVED FOR RELEASE: 09/17/2001 CIA-RDP86-00513R002202220002-9"

"APPROVED FOR RELEASE: 09/17/2001 CIA-RDP86-00513R002202220002-9

USSR UDC 621.791.053:669.295:620.192.47

NIKIFOROV, G. D., Doctor of Technical Sciences, and REDCHITS, V. V., Engineer, Moscow Aviation Technological Institute

"Mechanism of Pore Formation in the Welding of Titanium Alloys"

Moscow, Svarochenoye Proizvodstvo, No 3, Mar 71, pp 49-51

Abstract: Samples of OT-4 titanium alloy were argon-arc welded with direct polarity d-c current with a tungsten electrode (without filler wire) in a pulsed-arc mode. Pulse time was in the limits of 0.8-1.12 seconds. It was determined that the main reason of pore formation in OT-4 alloy (and other titanium alloys) is hydrogen, which forms by the decomposition of moisture. In welding titanium alloys the process of metal bath degassing occurs in several stages and is characterized by the presence of peaks in the surve for the relationship of weld seam porosity to current pulse duration. By improving the quality of end surface preparation prior to welding the porosity in weld seams is significantly reduced.

1/1

APPROVED FOR RELEASE: 09/17/2001 CIA-RDP86-00513R002202220002-9"

"APPROVED FOR RELEASE: 09/17/2001 CIA-RDP86-00513R002202220002-9

NIKIFOROV, G. S.

SO: JPRS 53448
12 MAY 71

AN OPERATOR'S SELF-CONTROL OF RECEIVING INFORMATION FROM A MEASURING APPARATUS

G. S. Nikiforov (psychology) pp 38-43

Specialists dealing with the evaluation of the successfulness of work in systems with participation of a human operator are interested in, in addition to mechanical faults, faults in the form of errors made by an operator in fulfilling an algorithm of behavior in a control system assigned to him.

Temporally impersistent faults or errors are psychological faults consisting of nonfulfillment and incorrect or untimely fulfillment of specific psychophysiological acts (A.I. Gubinskiy). The consequences of committing these types of errors, form the point of view of the reliability of the "man-equipment" system, can be most variable, to the point of appearance of dangerous or catastrophic situations. An operator makes errors in receiving information (erroneous readings from an instrument, taking a reading from the wrong instrument, and so on), at the stage in which information is processed (reading errors, forgetting instructions, selecting incorrect strategy of behavior , and so on), and at the stage in which execution functions are fulfilled (confusing control organs, errors in information input into the sytem, and so on).

Introduction of a self-control operation into the algorithm of an operator's work has been proposed as one of the possible methods for combating psychological faults (or errors) of an operator (A.I. Gubinskiy). In principle this method can be applied beneficially at all stages of an operator's work (reception, processing, and production of information) concerning the control or servicing of equipment. However, to date a great number of questions involving the fulfillment of a self-control operation remain unsolved.

Below an attempt is made to reveal a strategy for an operator's behavior in a particular case, and namely in taking readings from a measuring apparatus under the condition that the operator employs a self-control operation.

In the case where the algorithm of an operator's work foresees the possibility (or necessity) of a self-control operation, the reliability of taking readings from an apparatus by an operator can be expressed in the following general form:

APPROVED FOR RELEASE: 09/17/2001 CIA-RDP86-00513R002202220002-9"

"APPROVED FOR RELEASE: 09/17/2001 CIA-RDP86-00513R002202220002-9

AA0052389

N

UR 0482

Soviet Inventions Illustrated, Section III Mechanical and General, Derwent, 1-70

243414 LIFTING DEVICE FOR AEROPLANES consists of truck, with loading platform 2, and is distinguished by mounting a polypast on the loading platform. The polypast lower block 3 is fixed to the platform, whereas the upper one is used to fix the aeroplane into the board. The polypast cable are connected to the hoist 9 fixed to the truck.

17.2.68 as 1218674/40-23.M.S.BALYKIN et al.(15.9.69)
Class 62c.Int.Cl.B 64f.

Balykin, M. S.; Golubev, Yu. V.; Nikiforov, L. A.; Chernyshev, A. S.; Shekhterman, Ye. I.

1/2

4

19820989

APPROVED FOR RELEASE: 09/17/2001 CIA-RDP86-00513R002202220002-9"

"APPROVED FOR RELEASE: 09/17/2001 CIA-RDP86-00513R002202220002-9

Extruding
press were carried

AA0052389

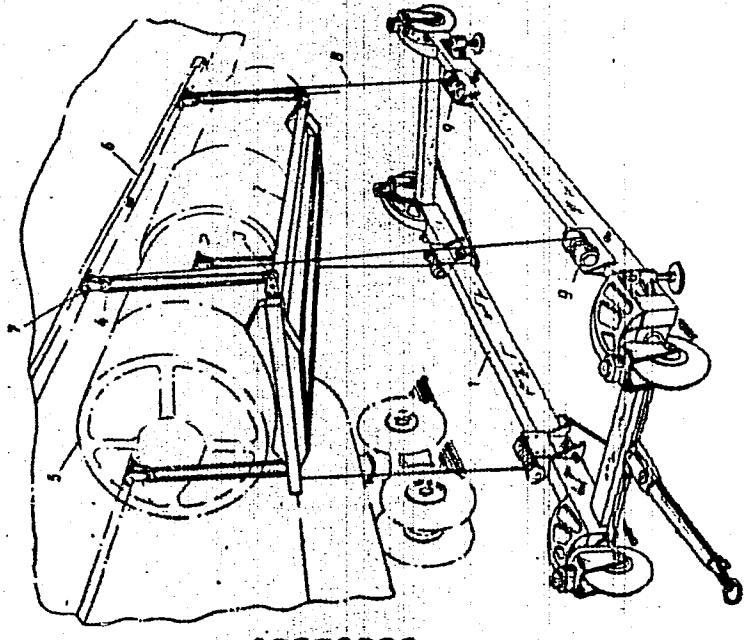

19820990

2/2

mp

APPROVED FOR RELEASE: 09/17/2001 CIA-RDP86-00513R002202220002-9"

"APPROVED FOR RELEASE: 09/17/2001 CIA-RDP86-00513R002202220002-9

USSR

BATURIN, A. I., SINEL [illegible]
L. D.

"Experimental Study of the Temperature Field in a Deformable Volume When Extruding Aluminum Alloys"

Moscow, Kuznechno-Shtampovochnoye Proizvodstvo, No 3, Mar 71, pp 6-8

Abstract: This article contains a discussion of the results of an experimental study of the temperature field when extruding an ingot of aluminum alloy by recording temperatures at the melting points of the pure metals, the eutectics, metal compounds, and peritectic mixtures. The essence of the method is use of miniature steel capsules inside which samples of defined shape made of the corresponding sensor metals are placed. The sensor metals are selected so that their melting points are within the investigated extrusion temperature range of 350-500°C with 5-15° intervals.

The procedures used to select the shape and size of the capsules and sensor metals and to determine the melting points of the sensor metals are described. An experiment is described in which several cycles of extruding bars of aluminum alloy on a horizontal 1,500 ton-force press were carri[illegible]

CIA-RDP86-00513R002202220002-9

"APPROVED FOR RELEASE: 09/17/2001 CIA-RDP86-00513R002202220002-9

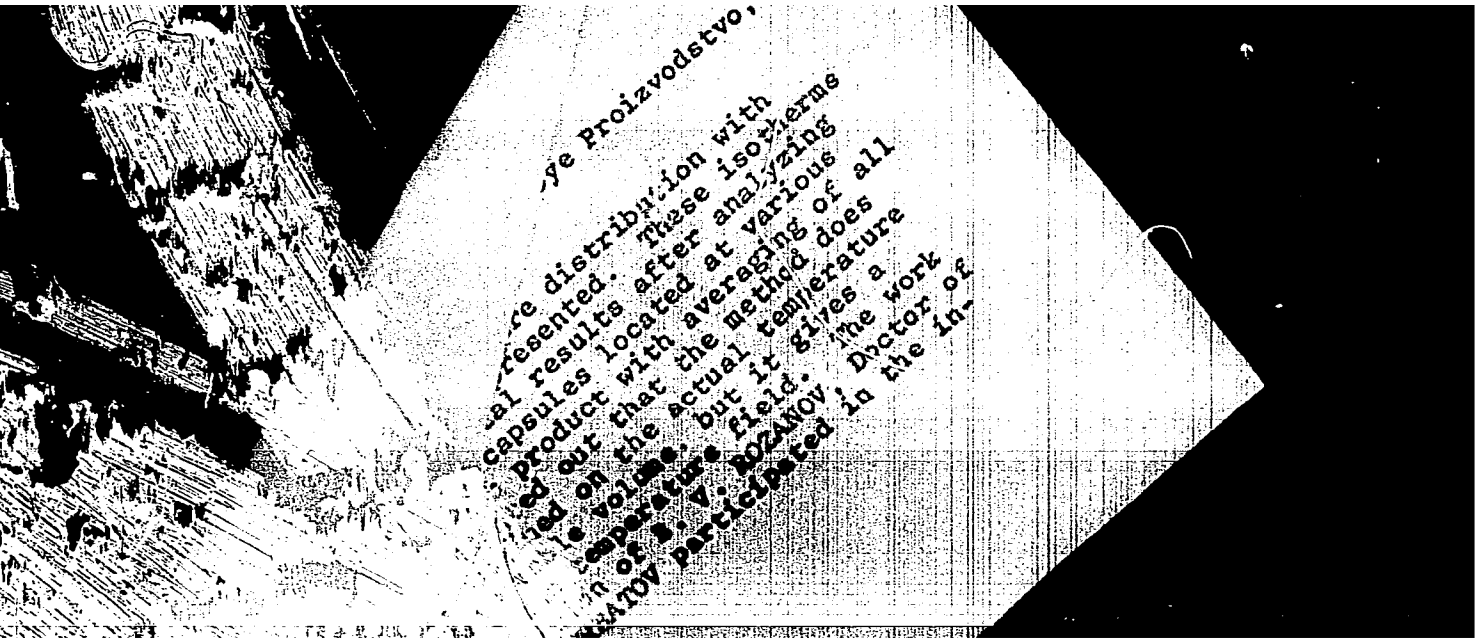

...ye Proizvodstvo,

...re distribution with
...resented. These isotherms
...al results after analyzing
capsules located at various
product with averaging of all
...ed out that the method does
...ed on the actual temperature
...e volume, but it gives a
temperature field. The work
...n of S.V. ROZANOV, Doctor of
...ATOV participated in the in-

APPROVED FOR RELEASE: 09/17/2001 CIA-RDP86-00513R002202220002-9"

"APPROVED FOR RELEASE: 09/17/2001 CIA-RDP86-00513R002202220002-9

USSR

GAYTEN[illegible]ICH, S. YA., NIKIFOROV, L. P., [illegible], V. L., OBUKHOVA, V. R., [illegible]KO, G. A., CHERVONSKIY, V. I., and [illegible], YE. E., Institute of [illegible] imeni D. I. Ivan ovskiy, USSR Academy of Medical Sciences, Moscow

"New A[illegible] Sumakh from the Uukuniemi Group"

Moscow, Vo[illegible] [illegible]usologii, No 1, Jan/Feb 71, pp 21-25

Abstract: [illegible] the arbovirus Sumakh in the USSR is described for the first tim[illegible] was obtained from the hearts and lungs of black-birds (Turdus [illegible] [illegible]ected in [illegible]erbaydshan. The virus was similar to but not identical [illegible] shown in the agar gel diffusion test, but not by the comp[illegible] test. The isolated virus was pathogenic for suckling white mice. [illegible]ation period of 11 days was found upon intracerebral, which in [illegible] [illegible]ages was reduced to 96 hours. Mice 1-3 days of age were most su[illegible] antigen for hemagglutination reactions was prepared from suck[illegible] brains by the ucrose-acetone method. The titer of this antigen did [illegible] Subsequent workup with Tween-80 and ether raised the titer to [illegible] [illegible]n the antigen was prepared by the [illegible] the material was [illegible] Tween-80 and ether and 1/2

APPROVED FOR RELEASE: 09/17/2001 CIA-RDP86-00513R002202220002-9"

"APPROVED FOR RELEASE: 09/17/2001 CIA-RDP86-00513R002202220002-9

2/2

APPROVED FOR RELEASE: 09/17/2001 CIA-RDP86-00513R002202220002-9"

"APPROVED FOR RELEASE: 09/17/2001 CIA-RDP86-00513R002202220002-9

Metrology, Surveying

USSR

UDC 621.317.759:621.376.58

NIKIFOROV, M. B., PALAMARYUK, G. O., Ryazan'

"Measuring the First Derivative of a Pulse-Frequency Signal"

Novosibirsk, Avtometriya, No 2, 1972, pp 51-54

Abstract: A study was made of the development and investigation of devices for measuring the first derivative of a pulse-frequency signal by the nontime argument also given in the form of the pulse repetition rate. A method of constructing a device for measuring the first derivative of the pulse-frequency signal is presented which eliminates the two deficiencies of the procedure of R. G. Karpov [Tekhnika chastotno-impul'snogo modelirovaniya, Moscow, Mashinostroyeniye Press, 1969] — the restriction imposed on the law of variation of $F_x(t)$ in time and the necessity for measuring the $F_z(t)$ signal obtained using a frequency meter which implies additional dynamic errors and increased expenditures on equipment. The presented device is a pulse-frequency tracking system [G. I. Takhvanov, et al., Vychislitel'naya tekhnika, Trudy MVTU im. Baumana, No 4, Moscow, Mashinostroyeniya Press, 1964] which comprises a reversible counter and a binary multiplier, the feedback circuit of which includes a frequency divider and a device for integrating the pulse-frequency signal with respect to a nontime parameter. The operating conditions of the reversible counters and the subtraction circuit are controlled by commutators.

1/1

APPROVED FOR RELEASE: 09/17/2001 CIA-RDP86-00513R002202220002-9"

"APPROVED FOR RELEASE: 09/17/2001 CIA-RDP86-00513R002202220002-9

NIKIFOROV, G. S.

SO: JPRS 53448
12 May 71

AN OPERATOR'S SELF-CONTROL OF RECEIVING INFORMATION
FROM A MEASURING APPARATUS

G. S. Nikiforov (psychology)

PP 38-43

Specialists dealing with the evaluation of the successfulness of work in systems with participation of a human operator are interested in, in addition to mechanical faults, faults in the form of errors made by an operator in fulfilling an algorithm of behavior in a control system assigned to him.

Temporally impersistent faults or errors are psychological faults consisting of nonfulfillment and incorrect or untimely fulfillment of specific psychophysiological acts (A.I. Gubinskiy). The consequences of committing these types of errors, form the point of view of the reliability of the "man-equipment" system, can be most variable, to the point of appearance of dangerous or catastrophic situations. An operator makes errors in receiving information (erroneous readings from an instrument, taking a reading from the wrong instrument, and so on), at the stage in which information is processed (reading errors, forgetting instructions, selecting incorrect strategy of behavior , and so on), and at the stage in which execution functions are fulfilled (confusing control organs, errors in information input into the sytem, and so on).

Introduction of a self-control operation into the algorithm of an operator's work has been proposed as one of the possible methods for combating psychological faults (or errors) of an operator (A.I. Gubinskiy). In principle this method can be applied beneficially at all stages of an operator's work (reception, processing, and production of information) concerning the control or servicing of equipment. However, to date a great number of questions involving the fulfillment of a self-control operation remain unsolved.

Below an attempt is made to reveal a strategy for an operator's behavior in a particular case, and namely in taking readings from a measuring apparatus under the condition that the operator employs a self-control operation.

In the case where the algorithm of an operator's work foresees the possibility (or necessity) of a self-control operation, the reliability of taking readings from an apparatus by an operator can be expressed in the following general form:

APPROVED FOR RELEASE: 09/17/2001 CIA-RDP86-00513R002202220002-9"

"APPROVED FOR RELEASE: 09/17/2001 CIA-RDP86-00513R002202220002-9

AA0052389

N

UR 0482

Soviet Inventions Illustrated, Section III Mechanical and General, Derwent, 1-70

243414 LIFTING DEVICE FOR AEROPLANES consists of truck, with loading platform 2, and is distinguished by mounting a polypast on the loading platform. The polypast lower block 3 is fixed to the platform, whereas the upper one is used to fix the aeroplane into the board. The polypast cable are connected to the hoist 9 fixed to the truck.

17.2.68 as 1218674/40-23.M.S.BALYKIN et al.(15.9.69)
Class 62c.Int.Cl.B 64f.

Balykin, M. S.; Golubev, Yu. V.; Nikiforov, L. A.; Chernyshev, A. S.; Shekhterman, Ye. I.

1/2

4

19820989

APPROVED FOR RELEASE: 09/17/2001 CIA-RDP86-00513R002202220002-9"

"APPROVED FOR RELEASE: 09/17/2001 CIA-RDP86-00513R002202220002-9

AA0052389

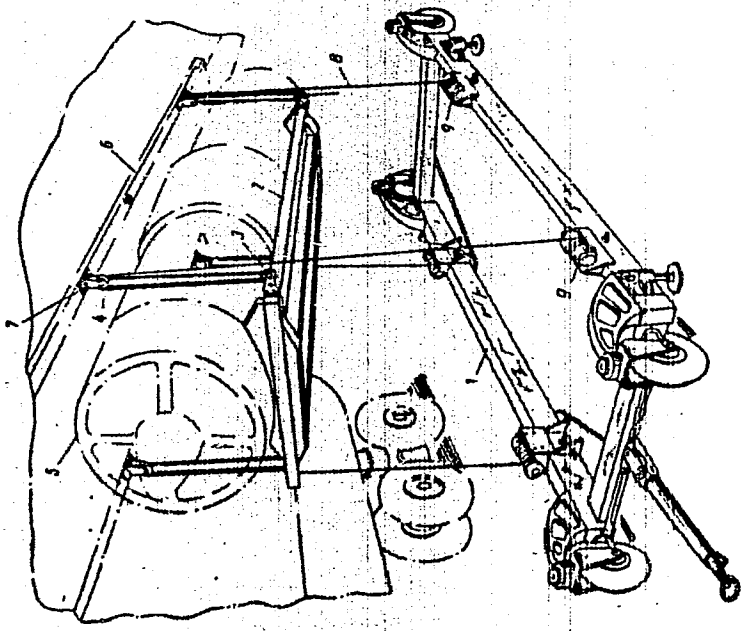

19820990

2/2

APPROVED FOR RELEASE: 09/17/2001 CIA-RDP86-00513R002202220002-9"

"APPROVED FOR RELEASE: 09/17/2001 CIA-RDP86-00513R002202220002-9

UDC 621.777:669.715

USSR

BATURIN, A. I., SINEL'NIKOV, S. I., MUKHIN, G. G., and NIKIFOROV, L. D.

"Experimental Study of the Temperature Field in a Deformable Volume When Extruding Aluminum Alloys"

Moscow, Kuznechno-Shtampovochnoye Proizvodstvo, No 3, Mar 71, pp 6-8

Abstract: This article contains a discussion of the results of an experimental study of the temperature field when extruding an ingot of aluminum alloy by recording temperatures at the melting points of the pure metals, the eutectics, metal compounds, and peritectic mixtures. The essence of the method is use of miniature steel capsules inside which samples of defined shape made of the corresponding sensor metals are placed. The sensor metals are selected so that their melting points are within the investigated extrusion temperature range of 350-500°C with 5-15° intervals.

The procedures used to select the shape and size of the capsules and sensor metals and to determine the melting points of the sensor metals are described. An experiment is described in which several cycles of extruding bars of aluminum alloy on a horizontal 1,500 ton-force press were carried out.

APPROVED FOR RELEASE: 09/17/2001 CIA-RDP86-00513R002202220002-9"

"APPROVED FOR RELEASE: 09/17/2001 CIA-RDP86-00513R002202220002-9

USSR

BATURIN, A. I., et al., Kuznechno-Shtampovochnoye Proizvodstvo, No 3, Mar 71, pp 6-8

Experimental isotherms for the temperature distribution with respect to the deformable volume are presented. These isotherms were constructed from the experimental results after analyzing the state of the eutectics in the capsules located at various points in the billet and extrusion product with averaging of all the extrusion cycles. It is pointed out that the method does not permit exact data to be obtained on the actual temperature at a defined point of the deformable volume, but it gives a qualitative representation of the temperature field. The work was carried out under the direction of B. V. ROZANOV, Doctor of Technical Sciences. V. A. SHCHERBATOV participated in the investigation.

2/2

APPROVED FOR RELEASE: 09/17/2001 CIA-RDP86-00513R002202220002-9"

"APPROVED FOR RELEASE: 09/17/2001 CIA-RDP86-00513R002202220002-9

USSR

UDC 576.858.25

GAYDAMOVICH, S. YA., NIKIFOROV, L. P., GROMASHEVSKIY, V. L., OBUKHOVA, V. R., KLISENKO, G. A., CHERVONSKIY, V. I., and MEL'NIKOVA, YE. E., Institute of Virsology imeni D. I. Ivan ovskiy, USSR Academy of Medical Sciences, Moscow

"New Arbovirus Sumakh from the Uukuniemi Group"

Moscow, Voprosy Virusologii, No 1, Jan/Feb 71, pp 21-25

Abstract: Isolation of the arbovirus Sumakh in the USSR is described for the first time. The virus was obtained from the hearts and lungs of blackbirds (Turdus merula) collected in Azerbaydzhan. The virus was similar to but not identical with Uukuniemi, as shown in the agar gel diffusion test, but not by the complement fixation test. The isolated virus was pathogenic for suckling white mice. An incubation period of 11 days was found upon intracerebral, which in subsequent passages was reduced to 96 hours. Mice 1-3 days of age were most susceptible. An antigen for hemagglutination reactions was prepared from suckling mouse brains by the ucrose-acetone method. The titer of this antigen did not exceed 1:64. Subsequent workup with Tween-80 and ether raised the titer to 1:256-1:512. When the antigen was prepared by the freon method, the material was enriched with Tween-80 and ether and

1/2

APPROVED FOR RELEASE: 09/17/2001 CIA-RDP86-00513R002202220002-9"

"APPROVED FOR RELEASE: 09/17/2001 CIA-RDP86-00513R002202220002-9

USSR

GAYDAMOVICH, S. YA., et al., Voprosy Virusologii, No 1, Han/Feb 71, pp 21-25

could serve for agglutination of erythrocytes in dilutions of 1:32-1:64. Optimum hemagglutination was achieved at pH 5.8 and at a temperature of 37°C. According to preliminary data on agar diffusion, the Sumakh virus is not identical with the Uukuniemi virus. A detailed study of the antigenic structure of Sumakh virus is under way.

2/2

APPROVED FOR RELEASE: 09/17/2001 CIA-RDP86-00513R002202220002-9"

"APPROVED FOR RELEASE: 09/17/2001 CIA-RDP86-00513R002202220002-9

Metrology, Surveying

UDC 621.317.759:621.376.58

USSR

NIKIFOROV, M. B., PALAMARYUK, G. O., Ryazan'

"Measuring the First Derivative of a Pulse-Frequency Signal"

Novosibirsk, Avtometriya, No 2, 1972, pp 51-54

Abstract: A study was made of the development and investigation of devices for measuring the first derivative of a pulse-frequency signal by the nontime argument also given in the form of the pulse repetition rate. A method of constructing a device for measuring the first derivative of the pulse-frequency signal is presented which eliminates the two deficiencies of the procedure of R. G. Karpov [Tekhnika chastotno-impul'snogo modelirovaniya, Moscow, Mashinostroyeniye Press, 1969] -- the restriction imposed on the law of variation of $F_x(t)$ in time and the necessity for measuring the $F_z(t)$ signal obtained using a frequency meter which implies additional dynamic errors and increased expenditures on equipment. The presented device is a pulse-frequency tracking system [G. I. Takhvanov, et al., Vychislitel'naya tekhnika, Trudy MVTU im. Baumana, No 4, Moscow, Mashinostroyeniya Press, 1964] which comprises a reversible counter and a binary multiplier, the feedback circuit of which includes a frequency divider and a device for integrating the pulse-frequency signal with respect to a nontime parameter. The operating conditions of the reversible counters and the subtraction circuit are controlled by commutators.

1/1

APPROVED FOR RELEASE: 09/17/2001 CIA-RDP86-00513R002202220002-9"

"APPROVED FOR RELEASE: 09/17/2001 CIA-RDP86-00513R002202220002-9

UDC: 681.325.5

USSR

PALAMARYUK, G. O., KOSTYASHKIN, L. N., NIKIFOROV, M. B., Ryazan Radio Engineering Institute

"A Pulse-Frequency Multiplier-Divider"

Moscow, Otkrytiya, Izobreteniya, Promyshlennyye Obraztsy, Tovarnyye Znaki, No 9, Mar 72, Author's Certificate No 331400, Division G, filed 1 Jul 70, published 7 Feb 72, p 156

Translation: This Author's Certificate introduces a pulse-frequency multiplier-divider which contains a flip-flop, which is connected by its output to one of the coincidence circuits, and a counter whose digital places are connected through code transfer diodes to the input code line. As a distinguishing feature of the patent, the functional possibilities of the device are extended by using a second flip-flop whose set terminal is connected to the output of the first coincidence circuit, while the output of the flip-flop is connected to the pulse inputs of the code carry diodes and to the potential inputs of two other coincidence circuits. The pulse input of one of these coincidence circuits is connected to the set terminal of the second flip-flop, and the output of this coincidence circuit is con-

1/2

APPROVED FOR RELEASE: 09/17/2001 CIA-RDP86-00513R002202220002-9"

"APPROVED FOR RELEASE: 09/17/2001 CIA-RDP86-00513R002202220002-9

USSR

PALAMARYUK, G. O. et al., USSR Author's Certificate No 331400

nected to the input of the counter. The outputs of the digital places of the counter are connected through an OR gate to the reset terminal of the first flip-flop.

2/2

APPROVED FOR RELEASE: 09/17/2001 CIA-RDP86-00513R002202220002-9"

"APPROVED FOR RELEASE: 09/17/2001 CIA-RDP86-00513R002202220002-9

UNCLASSIFIED PROCESSING DATE--23OCT70

1/2 022

TITLE--GAMMOPHEN ACTION ON THE BIOELECTRIC ACTIVITY OF THE BRAIN -U-

AUTHOR-(03)-NIKIFOROV, M.I., AZUBALIS, V., GENERALOV, V.I.

COUNTRY OF INFO--USSR

SOURCE--FARMAKOL. TOKSIKOL. (MOSCOW) 1970, 33(2), 146-9

DATE PUBLISHED--------70

SUBJECT AREAS--BIOLOGICAL AND MEDICAL SCIENCES

TOPIC TAGS--BRAIN, NERVOUS SYSTEM DRUG, ELECTROPHYSIOLOGY

CONTROL MARKING--NO RESTRICTIONS

DOCUMENT CLASS--UNCLASSIFIED

PROXY REEL/FRAME--1997/0194 STEP NO--UR/0390/70/033/002/0146/0149

CIRC ACCESSION NO--AP0119190

UNCLASSIFIED

APPROVED FOR RELEASE: 09/17/2001 CIA-RDP86-00513R002202220002-9"

"APPROVED FOR RELEASE: 09/17/2001 CIA-RDP86-00513R002202220002-9

UNCLASSIFIED PROCESSING DATE--23OCT70

2/2 022

CIRC ACCESSION NO--AP0119190

ABSTRACT/EXTRACT--(U) GP-0- ABSTRACT. GAMMOPHEN (4,AMINO,N,(ALPHA,METHYLPHENETHYL) BUTYRAMIDE, HLC) ADMINISTERED I.V. TO RABBITS AT 1-10 MG-KG DEFINITELY ALTERED THE PERIOD OF SOME BETA AND GAMMA FLUCTUATIONS AND HIGH AMPLITUDE ALPHA ACTIVITY; AT 15-75 MG-KG IT PREDOMINATELY ACTIVATED THE BETA ANG GAMMA RHYTHMS. IN RABBITS WITH ARMIN INTOXICATION, GAMMOPHEN RESTORED THE SPINDLE SHAPED ACTIVITY AND STEADILY INCREASED THE AMPLITUDE OF BETA AND GAMMA WAVES. NEUROANATOMICAL ISOLATION OF HEMISPHERES IN THE BRAIN STEM DECREASED THE LOW AND MEDIUM FREQUENCIES (1-13 FLUCTUATION-SEC) AND THE SPINDLE SHAPED RHYTHMS AGAINST THE GAMMOPHEN BACKGROUND. SUBARACHNOIDAL ADMINISTRATION OF GAMMOPHEN AT 15 AND 100 MU G CAUSED HIGH AMPLITUDE SYNCHRONIZED POTENTIALS IN THE ELECTROCORITCORGRAM. FACILITY: VOENNO MED. AKAD. IM. KIROVA, LENINGRAD, USSR.

UNCLASSIFIED

APPROVED FOR RELEASE: 09/17/2001 CIA-RDP86-00513R002202220002-9"

"APPROVED FOR RELEASE: 09/17/2001 CIA-RDP86-00513R002202220002-9

Acc. Nr: AP0043755 Ref. Code: UR 0050

PRIMARY SOURCE: Meteorologiya i Gidrologiya, 1970, Nr 3, pp 83-94

GAMMA-RAYS SURVEY OF SNOW COVER FROM AIRCRAFT

Dmitriyev, A. V.; Kogan, R. M.; Nikiforov, M. V.; Fridman, Sh. D.

Physical prerequisites and methods of measuring the snow cover by means of gamma-rays survey from aircraft are stated; problems of mapping the snow resources over large territories are being considered.

REEL/FRAME
19770161

APPROVED FOR RELEASE: 09/17/2001 CIA-RDP86-00513R002202220002-9"

"APPROVED FOR RELEASE: 09/17/2001 CIA-RDP86-00513R002202220002-9

ITLE--DEUTERON GENERATION ON NUCLEI BY HIGH ENERGY PROTONS -U-

UTHOR-(05)-GORYACHEV, YU.M., KANAVETS, V.P., LEVINTOV, I.I., NORCZOV, B.V., NIKIFOROV, N.A.

OUNTRY OF INFO--USSR

OURCE--YAD. FIZ. 1970, 11(3), 629-35

ATE PUBLISHED--------70

UBJECT AREAS--PHYSICS

OPIC TAGS--PARTICLE PRODUCTION, DEUTERON, PROTON BOMBARDMENT, SECONDARY EMISSION, DIFFERENTIAL CROSS SECTION, BERYLLIUM, CARBON, ALUMINUM, COPPER, TITANIUM, SILVER, GOLD

ONTROL MARKING--NO RESTRICTIONS

OCUMENT CLASS--UNCLASSIFIED

ROXY REEL/FRAME--1991/1063 STEP NO--UR/0367/70/011/003/0629/0635

IRC ACCESSION NO--AP0110753

UNCLASSIFIED

APPROVED FOR RELEASE: 09/17/2001 CIA-RDP86-00513R002202220002-9"

"APPROVED FOR RELEASE: 09/17/2001 CIA-RDP86-00513R002202220002-9

2/2 031 UNCLASSIFIED PROCESSING DATE--16OCT70

IRC ACCESSION NO--AP0110753

BSTRACT/EXTRACT--(U) GP-0- ABSTRACT. THE CROSS SECTIONS FOR THE PRODUCTION OF D, P, AND PI POSITIVE MESONS HAVE BEEN MEASURED IN THE INTERACTION OF 6.8-GEV-C P WITH BE, C, AL, CU, TI, AG, AND AU NUCLEI. THE SECONDARY PARTICLES WITH A MOMENTUM OF 1.23 GEV-C HAVE BEEN REGISTERED AT 15 MILLIRADIANS IN THE LAB. SYSTEM. THE DEPENDENCE OF THE DIFFERENTIAL CROSS SECTIONS ON THE MASS NO., A, OF THE NUCLEI CAN BE PUT IN THE FORM D PRIME2 SIGMA-DP D OMEGA IS SIMILAR TO A PRIMECHI, WHERE CHI SUBD EQUALS 1.24 PLUS OR MINUS 0.01, CHI SUBP EQUALS 0.69 PLUS OR MINUS 0.03, AND CHI SUBPI POSITIVE EQUALS 0.45 PLUS OR MINUS 0.03. THE OBTAINED RESULTS MAY BE BROUGHT INTO CONSENT WITH THE BUTLER PEARSON MECHANISM OF THE D PRODUCTION IF THE ABSORPTION OF D AND N IN THE NUCLEUS IS TAKEN INTO ACCOUNT. FACILITY: INST. TEOR. EKSP. FIZ., MOSCOW, USSR.

UNCLASSIFIED

APPROVED FOR RELEASE: 09/17/2001 CIA-RDP86-00513R002202220002-9"

"APPROVED FOR RELEASE: 09/17/2001 CIA-RDP86-00513R002202220002-9

UDC 621.762:669.018.245

USSR

NIKIFOROV, O. A.

"Antifriction and Electrotechnical Materials Made of Metal Powders"

V sb. Metallurgiya tsvetn. i redk. met. 1969 (Itogi nauki i tekhn. VINITI AN SSSR) (Metallurgy of Nonferrous and Rare Metals, 1969 [Results of Science and Technology, All-Union Institute of Scientific and Technical Information of the Academy of Sciences USSR]), Moscow, 1970, pp 56-91 (from RZh-Metallurgiya, No 3, Mar 71, Abstract No 3G442 by S. Bobrova)

Translation: Survey. The strength of the metal base of ironbase P/M antifriction materials goes as high as 50 kg/mm^2 due to selection of optimum compositions, to alloying, and improvement of technological processes. The introduction of Pb and of sulfides of Zn, Cu, etc. leads to a decrease in the coefficient of friction. The higher carrying capacity and better corrosion resistance of bronze-graphite antifriction materials have made them successful competitors of iron-base materials. The use of aluminum as the metal base of antifriction materials possessing elevated static and fatigue strength as well as good corrosion resistance shows promise. Multilayer antifriction materials possess far greater carrying capacity than ordinary porous parts simultaneously with satisfactory antifriction properties. For antifriction

1/2

APPROVED FOR RELEASE: 09/17/2001 CIA-RDP86-00513R002202220002-9"

"APPROVED FOR RELEASE: 09/17/2001 CIA-RDP86-00513R002202220002-9

USSR

NIKIFOROV, O. A.

Metallurgiya tsvetn. i redk. met. 1969, Moscow, 1970, pp 56-91

materials operating under dry friction, MoS_2 is in wide use; its coefficient of friction with respect to steel declines several times in vacuum. As electric contacts, powder metallurgy methods produce materials which, in addition to an electrically conductive and heat-conducting materials, contain a solid refractory component. Seven illustrations. Two tables. Bibliography with 169 titles.

2/2

APPROVED FOR RELEASE: 09/17/2001 CIA-RDP86-00513R002202220002-9"

"APPROVED FOR RELEASE: 09/17/2001 CIA-RDP86-00513R002202220002-9

UDC 621.762

USSR

KIPARISOV, S. S., NIKIFOROV, O. A., and KUZ'MINA, Yu. K., Moscow Institute of Steel and Alloys, Department of Rare, Radioactive Metals and Powder Metallurgy

"Investigating the Possibilities of Sintering Tungsten Borides With Nickel"

Ordzhonikidze, Izvestiya Vysshikh Uchebnykh Zavedeniy — Tsvetnaya Metallurgiya, No 5, 1970, pp 93-95

Abstract: A study was made of the wettability conditions of W_2B, WB, and W_2B_5 tungsten borides by liquid nickel and of the conditions for obtaining dense metal ceramics of materials based on these borides, with different nickel content. The preparation of samples and the experimental technique are briefly described. The results show that the wettability contact angles decrease insignificantly with increased temperature and are virtually independent of holding time. The microstructure of bases from W_2B, WB, and W_2B_5 after contact with nickel clearly show sections in which an interaction occurred between the borides and nickel. Thus, the interaction between tungsten borides and nickel at low values of the wettability contact angle makes it possible to expect a satisfactory bonding in sintering the cermet alloys.

1/2

APPROVED FOR RELEASE: 09/17/2001 CIA-RDP86-00513R002202220002-9"

"APPROVED FOR RELEASE: 09/17/2001 CIA-RDP86-00513R002202220002-9

USSR

KIPARISOV, S. S., et al. Izvestiya Vysshikh Uchebrykh Zavedeniy -- Tsvetnaya Metallurgiya, No 5, 1970, pp 93-95

These conclusions were confirmed by producing dense cermets with 5 to 7% residual porosity from tungsten borides with various nickle content (from 1 to 30 wt %). These alloys can be used as hard wear- and heat-resistant materials in machinery and apparatus.

2/2

APPROVED FOR RELEASE: 09/17/2001 CIA-RDP86-00513R002202220002-9"

"APPROVED FOR RELEASE: 09/17/2001 CIA-RDP86-00513R002202220002-9

UNCLASSIFIED PROCESSING DATE--13NOV70

1/2 032

TITLE--IMPROVEMENT OF EFFICIENCY OF OIL SYSTEMS OF HIGH SPEED SHIP DIESELS -U-

AUTHOR--NIKIFOROV, O.A.

COUNTRY OF INFO--USSR

SOURCE--IMPROVEMENT OF EFFICIENCY OF OIL SYSTEMS OF HIGH SPEED SHIP DIESELS (POVYSHENIYE EFFEKTIVNOSTI MASLYANYKH SISTEM BYSTROKHODNYKH

DATE PUBLISHED--------70

SUBJECT AREAS--MATERIALS, MECH., IND., CIVIL AND MARINE ENGR, PROPULSION AND FUELS

TOPIC TAGS--HANDBOOK, DIESEL ENGINE, MARINE ENGINE, VARNISH, CARBON COMBUSTION, LUBRICATING OIL, LUBRICANT ADDITIVE, LUBRICANT PROPERTY

CONTROL MARKING--NO RESTRICTIONS

DOCUMENT CLASS--UNCLASSIFIED

PROXY REEL/FRAME--3003/1269 STEP NO--UR/0000/70/000/000/0001/0223

CIRC ACCESSION NO--AM0130258

UNCLASSIFIED

APPROVED FOR RELEASE: 09/17/2001 CIA-RDP86-00513R002202220002-9"

"APPROVED FOR RELEASE: 09/17/2001 CIA-RDP86-00513R002202220002-9

UNCLASSIFIED PROCESSING DATE--13NOV70

2/2 032

CIRC ACCESSION NO--AM0130258

ABSTRACT/EXTRACT--(U) GP-0- ABSTRACT. TABLE OF CONTENTS: PREFACE 3. CHAPTER I OIL SYSTEMS OF HIGH SPEED SHIP DIESELS 5. II THEORETICAL INVESTIGATION OF METHODS FOR IMPROVEMENT AND STABILIZATION OF OPERATING PROPERTIES OF OIL WITH ADDITIVES 57. III TESTS OF SHIP DIESELS 86. IV METHODS FOR QUALITATIVE CONTROL OF OIL 109. V IMPROVEMENT OF EFFICIENCY OF OIL SYSTEM OF HIGH SPEED SHIP DIESELS 134. BIBLIOGRAPHY 221. THE BOOK DEALS WITH PROBLEMS CONNECTED WITH THE REDUCTION OF WEAR AS WELL AS CARBON AND VARNISH DEPOSISTS IN SOVIET HIGH SPEED SHIP DIESELS DUE TO IMPROVEMENT OF EFFICIENCY OF THEIR OIL SYSTEMS... THE BOOK WAS WRITTEN FOR ENGINEERING TECHNICAL PERSONNEL IN SHIP BUILDING, DIESEL CONSTRUCTION, AS WELL AS STUDENTS OF SHIP BUILDING AND TRANSPORT COLLEGES.

UNCLASSIFIED

APPROVED FOR RELEASE: 09/17/2001 CIA-RDP86-00513R002202220002-9"

"APPROVED FOR RELEASE: 09/17/2001 CIA-RDP86-00513R002202220002-9

1/2 011 UNCLASSIFIED PROCESSING DATE--11SEP70

TITLE--CATALYTIC PYROLYSIS OF GASOLINE IN A BENCH APPARATUS -U-

AUTHOR--LYAKUMOVICH, A.G., PAUSHKIN, YA.M., NIKIFOROV, P.A., TAROV, YU.T.

COUNTRY OF INFO--USSR

SOURCE--NEFTEPERERAB. NEFTEKHIM. (MOSCOW,) 1970, (1) 20-2

DATE PUBLISHED--------70

SUBJECT AREAS--MATERIALS, PROPULSION AND FUELS

TOPIC TAGS--CATALYTIC CRACKING, PYROLYSIS, GASOLINE, METAL CATALYST, ETHYLENE, PROPYLENE

CONTROL MARKING--NO RESTRICTIONS

DOCUMENT CLASS--UNCLASSIFIED

PROXY REEL/FRAME--1989/1142 STEP NO--UR/0318/70/000/001/0020/0022

CIRC ACCESSION NO--AP0107631

UNCLASSIFIED

APPROVED FOR RELEASE: 09/17/2001 CIA-RDP86-00513R002202220002-9"

"APPROVED FOR RELEASE: 09/17/2001 CIA-RDP86-00513R002202220002-9

2/2 011 UNCLASSIFIED PROCESSING DATE--11SEP70

CIRC ACCESSION NO--AP0107631

ABSTRACT/EXTRACT--(U) GP-0- ABSTRACT. PYROLYSIS WITH GROUP VI METALS AS CATALYSTS AT 780 AND 790DEGREES YIELDED 70-80PERCENT AND 35-40PERCENT MORE C SUB2 H SUB4, RESP., AND ONE SIXTH TO ONE EIGHTH OF THE UNREACTED HYDROCARBONS AND RESINS OBTAINED BY PYROLYSIS WITHOUT A CATALYST. THE C SUB3 H SUB6 YIELD REMAINED IN SIMILAR LIMITS. THE GASOLINE, B. 37-149DEGREES AND HAVING SP. GR. 0.657, N, AND ISOPARAFFINS 92.58, NAPHTHENES 2.83, AND AROMATICS 4.59PERCENT, WAS DILD. WITH 40-52PERCENT STEAM. A SCHEMATIC REPRESENTATION OF THE APP. IS PRESENTED.

UNCLASSIFIED

APPROVED FOR RELEASE: 09/17/2001 CIA-RDP86-00513R002202220002-9"

"APPROVED FOR RELEASE: 09/17/2001 CIA-RDP86-00513R002202220002-9

USSR UDC: 550.834

ROZIN, G. I.-M., KUPERMAN, B. M., NIKIFOROV, S. V., All-Union Scientific Research Institute of Geophysical Prospecting Methods

"A Device for Plotting Seismic Time Sections"

Moscow, Otkrytiya, Izobreteniya, Promyshlennyye Obraztsy, Tovarnyye Znaki, No 13, May 72, Author's Certificate No 335644, Division G, filed 17 Dec 70, published 11 Apr 72, pp 193-194

Translation: This Author's Certificate introduces a device for plotting seismic time sections. The device contains a rotating drum, an electric motor, a speed reducer, a moving carriage with step-by-step motor and a cathode-ray tube. As a distinguishing feature of the patent, the service life of the CRT is extended, reliability is improved, and the overall dimensions of the device are reduced by mounting the rotating drum and the electric motor connected to it through the speed reducer on the moving carriage which is displaced discretely by the step-by-step motor along the turning axle of the drum parallel to the screen of the stationary CRT.

APPROVED FOR RELEASE: 09/17/2001 CIA-RDP86-00513R002202220002-9"

"APPROVED FOR RELEASE: 09/17/2001 CIA-RDP86-00513R002202220002-9

USSR

ROZIN, G. I.-M. et al., USSR Author's Certificate No 335644

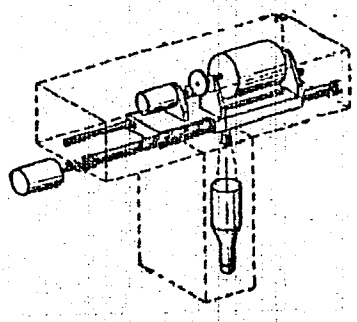

2/2

APPROVED FOR RELEASE: 09/17/2001 CIA-RDP86-00513R002202220002-9"

"APPROVED FOR RELEASE: 09/17/2001 CIA-RDP86-00513R002202220002-9

USSR UDC: 550.834

SLUTSKOVSKIY, A. I., VASIK, A. I., NIKIFOROV, S. V., BEREZA, G. V.

"A Device for Recording Seismic Time Profiles in the Form of Triangles and Trapezoids"

Moscow, Otkrytiya, Izobreteniya, Promyshlennyye Obraztsy, Tovarnyye Znaki, No 8, Mar 72, Author's Certificate No 330410, Division G, filed 10 Nov 69, published 24 Feb 72, p 143

Translation: This Author's Certificate introduces: 1. A device for recording seismic time profiles in the form of triangles and trapezoids. The device contains an optimizer, a modulator and a scanning system. As a distinguishing feature of the patent, the effectiveness of processing seismic data is improved by connecting high-frequency square-wave sources through integrating circuits and amplifiers to the inputs of the balanced modulator whose output is connected through an amplifier to a diode bilateral clipper with controllable threshold. The second input of the clipper is connected to a pulse amplifier of extremum values of seismic signals, and the clipper output is connected through an amplifier and half-wave rectifier to the amplifier of the vertical deflecting system of a cathode ray tube. 2. A modi-

1/2

APPROVED FOR RELEASE: 09/17/2001 CIA-RDP86-00513R002202220002-9"