"APPROVED FOR RELEASE: 09/17/2001 CIA-RDP86-00513R002202220012-8

USSR

UDC 613.646:612.79.017.1

NIKOLAYEVA, Ye. N., Candidate of Medical Sciences, Institute of Labor Hygiene and Occupational Diseases, Academy of Medical Sciences USSR, Moscow

"Seasonal Changes in the Bactericidal Activity of the Skin of Workers in Various Industrial Microclimates"

Moscow, Gigiyena i Sanitariya, No 11, Nov 71, pp 25-28

Abstract: A large group of workers from various industrial microclimates were divided into three groups: 1) construction workers who work outdoors the year round; 2) assembly workers who work in a normal microclimate, heated in winter; and 3) workers in hot shops who are affected by infrared radiation and wide temperature fluctuations. All workers lived in the temperate zone and were exposed to similar seasonal changes; the experiments were conducted during the second half of summer and winter. Three-minute observations, regardless of the number of bacteria (E. coli and autoflora) applied to the skin, showed that construction workers had the highest bactericidal activity (95.2 on a scale of 100) in winter; in summer, the index dropped somewhat, but was still highest in this group. Assembly workers showed an index of 71.2 in summer, 57.7 in winter. Hot shop workers showed 51.07 in summer, 65.86 in winter. The last two groups presented a marked response to the number of bacteria on the skin. Seasonal changes (fewer bacteria in summer) were observed in

1/2

APPROVED FOR RELEASE: 09/17/2001 CIA-RDP86-00513R002202220012-8"

"APPROVED FOR RELEASE: 09/17/2001 CIA-RDP86-00513R002202220012-8

USSR

NIKOLAYEVA, Ye. N., Gigiyena i Sanitariya, No 11, Nov 71, pp 25-28

construction and assembly workers. The greatest sensitivity to UV light was found in assembly workers in winter; hot shop workers were the most sensitive in summer; and construction workers showed the least sensitivity at both times. A relationship was established between sensitivity to UV light and low bactericidal activity. The statistics revealed a correlation between skin disease and poor skin reactions. Sports, cold showers, or UV irradiation is recommended for those who work indoors.

2/2

APPROVED FOR RELEASE: 09/17/2001 CIA-RDP86-00513R002202220012-8"

"APPROVED FOR RELEASE: 09/17/2001 CIA-RDP86-00513R002202220012-8

USSR

UDC 613.646:613.13

MALYSHEVA, A. Ye., Professor, REPIN, G. N., and NIKOLAYEVA, Ye. N., Institute of Labor Hygiene and Occupational Diseases, Academy of Medical Sciences USSR, Moscow

"The Significance of the Microclimate of Industrial Premises for Human Seasonal Adaptation"

Moscow, Gigiyena i Sanitariya, No 11, 1970, pp 24-29

Abstract: Male workers in three occupational groups, working in different industrial microclimatic conditions, have been investigated in recent years. The first group consisted of construction workers who worked outside the year round (Moscow); the second group consisted of workers in machine assembly shops working in ventilated quarters with normal microclimate (city of Elektrostal'); and the third group comprised "hot" shop workers, who were subjected to infrared radiation, high air temperatures -- especially in the summer, and also to large temperature drops (Lipetsk).

More than 1,000 workers in these occupational groups underwent physiological and immunobiological tests. A total of 5,000 workers in the same groups

APPROVED FOR RELEASE: 09/17/2001 CIA-RDP86-00513R002202220012-8"

"APPROVED FOR RELEASE: 09/17/2001 CIA-RDP86-00513R002202220012-8

USSR

MALYSHEVA, A. Ye., et al, Gigiyena i Sanitariya, No 11, 1970, pp 24-29

were subjected to a detailed analysis of their morbidity with temporary work disability. Differences in the skin temperature response to local cooling must be evaluated as an indicator of higher functional lability of skin vessels to cooling in construction workers.

2/2

APPROVED FOR RELEASE: 09/17/2001 CIA-RDP86-00513R002202220012-8"

"APPROVED FOR RELEASE: 09/17/2001 CIA-RDP86-00513R002202220012-8

AA0044800

Soviet Inventions Illustrated, Section II Electrical, Derwent, UR 0482

2/70

243915 POWERMETER contains a sensitive element of a deformation sensitive material. The strain wire is placed between two hard and electrically insulating plates such as glass to increase rigidity. Briefly, the device consists of a top and bottom glass plates 1 and 2. The plates are fixed to the power receiving elements 3 and 4. Between the plates is placed a thin conductor 5 with a high resistance and of high flexibility. When a force is acting perpendicularly to the axis of the conductor, the conducting wire changes shape and cross-section area.

13.7.67 as 1173520/18-10.K.N.KAN & A.F.NIKOLAEVICH, LENINGRAD INSTRUMENT DES.INST.(26.9.69) Bul 17/ 14.5.69. Class 42k. Int.Cl.G 01 1.

AUTHORS: Kan, K. N.; Nikolayevich, A. F.

Leningradskiy Institut Aviatsionnogo Priborostroyeniya

4

1/2

19771631

APPROVED FOR RELEASE: 09/17/2001 CIA-RDP86-00513R002202220012-8"

"APPROVED FOR RELEASE: 09/17/2001 CIA-RDP86-00513R002202220012-8

AA0044800

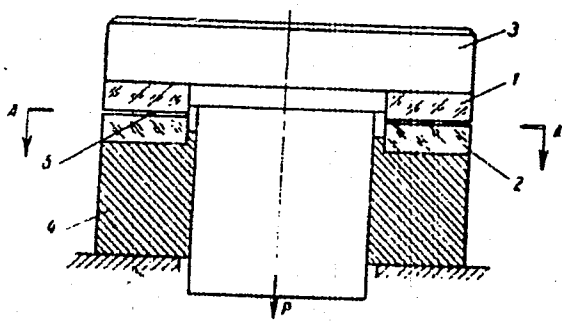

2/2

19771632

APPROVED FOR RELEASE: 09/17/2001 CIA-RDP86-00513R002202220012-8"

"APPROVED FOR RELEASE: 09/17/2001 CIA-RDP86-00513R002202220012-8

AA0047071 NIKOLAYEVICH A.F.

Soviet Inventions Illustrated, Section II Electrical, Derwent, UR 0482

1/70

241776 RELAXATION TENSOMETER comprises a base 1, an active grip 2 and passive grip 3, loading mechanism 4, force measuring device 5 and compensator for linear shrinkage 6. The compensator is in the form of a hollow cylinder of the same material as the tested sample with the end surface resting on the base and axially in line with the grips and its height is equal to the operating length of sample 7 and the area of cross-section is many times bigger than that of the sample.

The sample is lowered by mechanism 4 and the effort is measured by device 5. A deformation in shape gradually takes place in the material of the sample and leads to its shrinkage.

12.7.67 as 1171877/25-29.K.N.KAN & A.F.NIKOLAEVICH. LENINGRAD AVIATION INSTRUMENTS INST.(5.9.69) Bul 14/ 18.4.69. Class 42k. Int.Cl.G 01 1.

1/2

18

19790533

APPROVED FOR RELEASE: 09/17/2001 CIA-RDP86-00513R002202220012-8"

"APPROVED FOR RELEASE: 09/17/2001 CIA-RDP86-00513R002202220012-8

AA0047071

AUTHORS: Kan, K. N.; Nikolayevich, A. F.

Leningradskiy Institut Aviatsionnogo Priborostroyeniya

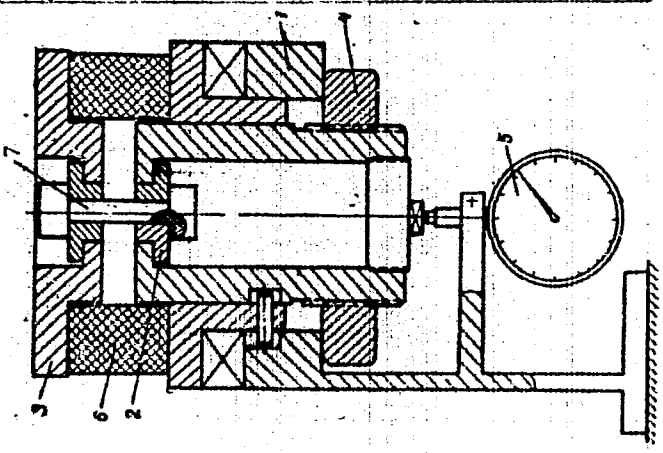

2/2

19790534

APPROVED FOR RELEASE: 09/17/2001 CIA-RDP86-00513R002202220012-8"

"APPROVED FOR RELEASE: 09/17/2001 CIA-RDP86-00513R002202220012-8

USSR UDC: 681.3

NIKOLAYEVICH, V. A., PAVLENKO, V. V., Zhdanov Metallurgical Institute

"Concerning the Problem of Accommodating Information Files in Automated Control Systems"

Leningrad, Izvestiya VUZov: Priborostroyeniye, Vol 16, No 2, 1973, pp 69-72

Abstract: The authors discuss the problem of data distribution on magnetic tape. Practical estimates are given for the mathematical expectation of the length of a tape run for various distributions of the parameters of the data block. A simple method is proposed for distributing information over a magnetic tape.

1/1

APPROVED FOR RELEASE: 09/17/2001 CIA-RDP86-00513R002202220012-8"

"APPROVED FOR RELEASE: 09/17/2001 CIA-RDP86-00513R002202220012-8

USSR UDC: 621.3;621.039.667

BOOK

DASHUK, P. N., ZAYENTS, S. L., KOMEL'KOV, V. S. (general editor), KUCHINSKIY, G. S., NIKOLAYEVSKAYA, N. N., SHKUROPAT, P. I., SHKEYERSON, G. A.

TEKHNIKA BOL'SHIKH IMPUL'SNYKH TOKOV I MAGNITNYKH POLEY (Technology of High-Current Pulses and Strong Magnetic Fields), Moscow, "Atomizdat", 1970, 472 pp, illus, biblio, 2465 copies printed

The book describes circuits, methods of calculation, characteristics and design of high-power capacitor banks and their principal elements: capacitors, dischargers of various types (vacuum, high-pressure, solid-dielectric), insulation of connectors (busbars, cables), and pulse transformers. Methods are presented for calculation of magnetic fields and inductances in solenoids and conductors. The singularities of operation of the structural elements are considered as well as the behavior of metals in superconducting fields.

Contents *Page*

Foreword 3
Introduction 6
References (14 titles) 11

1/6

APPROVED FOR RELEASE: 09/17/2001 CIA-RDP86-00513R002202220012-8"

"APPROVED FOR RELEASE: 09/17/2001 CIA-RDP86-00513R002202220012-8

SR

DASHUK, P. N. et al., TEKHNIKA BOL'SHIKH IMPUL'SNYKH TOKOV I MAGNITNYKH POLEY, Moscow, "Atomizdat", 1970

Chapter 1. Schematic Circuits of High-Current Pulse Generators . 12
1.1. Schematic Circuits 12
1.2. Circuits With Load-Shorting (Crowbar) 23
References (12 titles) 27
Chapter 2. High-Voltage Pulse Capacitors 28
2.1. Special Requirements for the High-Voltage Pulse Capacitors Used in Current Pulse Generators 28
2.2. Characteristics of Basic Insulating Materials at Frequencies of 10^4-10^7 Hz 29
2.3. Operating Conditions of Capacitor Insulation Subjected to Repeated Oscillatory Discharges 34
2.4. Inductance of Capacitors 47
2.5. Energy Losses in Pulse Capacitors 65
2.6. Experimental Determination of Capacitor Characteristics . . 73
2.7. Types of Pulse Capacitors and Their Structural Elements . . 76
References (47 titles) 104
Chapter 3. Vacuum Dischargers 107
3.1. General Requirements 107
3.2. General Characteristics of Vacuum Dischargers 109
3.3. Insulation of Vacuum Dischargers 111

APPROVED FOR RELEASE: 09/17/2001 CIA-RDP86-00513R002202220012-8"

"APPROVED FOR RELEASE: 09/17/2001 CIA-RDP86-00513R002202220012-8

:R

DASHUK, P. N. et al., TEKHNIKA BOL'SHIKH IMPUL'SNYKH TOKOV I MAGNITNYKH POLEY, Moscow, "Atomizdat", 1970

3.4. Delay in Breakdown of Vacuum Dischargers 120
3.5. Distribution of Current in a Vacuum Discharger 146
3.6. Durability of a Vacuum Discharger 153
3.7. Construction of Vacuum Dischargers 156
References (41 titles) 173
Chapter 4. Dischargers at Atmospheric Pressure 175
4.1. Basic Assumptions 175
4.2. Principles of Controlling Spark Dischargers 178
4.3. Trigatrons 194
4.4. Cascade Dischargers 216
4.5. Electrode Erosion Accompanying Commutation of High-Current Pulses 222
References (94 titles) 228
Chapter 5. High-Pressure Dischargers 232
5.1. Typical Peculiarities of the Dischargers and Field of Application 233
5.2. Discharge Voltages 236
5.3. Methods of Initiation, and Delay in Firing of Dischargers .

3/6

APPROVED FOR RELEASE: 09/17/2001 CIA-RDP86-00513R002202220012-8"

"APPROVED FOR RELEASE: 09/17/2001 CIA-RDP86-00513R002202220012-8

DASHUK, P. N. et al., TEKHNIKA BOL'SHIKH IMPUL'SNYKH TOKOV I MAGNITNYKH POLEY, Moscow, "Atomizdat", 1970

5.4. Characteristics of a Spark Channel and Energy Release . . . 241
5.5. Structural Elements and Some Peculiarities of Operational Use of Compressed-Gas Dischargers 247
References (37 titles) 254
Chapter 6. Solid-Dielectric Dischargers 256
References (8 titles) 267
Chapter 7. Insulation of Current Pulse Generators. Low-Inductance Cables 268
7.1. Design Modifications of Connecting Elements in Current Pulse Generators, and Requirements for Insulating them 268
7.2. Some General Characteristics of Insulation of Connecting Elements of All Types 269
7.3. Discharge Voltages Over the Surface of Insulation 278
7.4. Construction of Individual Sections of the Insulation of Connecting Elements, and Their Discharge Characteristics . . . 281
7.5. Low-Inductance Cables 286
7.6. Dressing Cable Terminals 296
References (50 titles) 301

4/6

APPROVED FOR RELEASE: 09/17/2001 CIA-RDP86-00513R002202220012-8"

"APPROVED FOR RELEASE: 09/17/2001 CIA-RDP86-00513R002202220012-8

SR

DASHUK, P. N. et al., TEKHNIKA BOL'SHIKH IMPUL'SNYKH TOKOV I MAGNITNYKH POLEY, Moscow, "Atomizdat", 1970

Chapter 8. Calculations of Current Pulse Generators 304
8.1. Computational Scheme 304
8.2. Fundamentals of an Approximate Method of Calculating the Inductance of Flat Busbars 307
8.3. Calculating the Inductance of Busbars When Current is Supplied Along the Periphery 319
8.4. Calculating the Inductance of Current Pulse Generators With Cable Connection Between the Capacitors and the Central Buses 328
8.5. More Precise Calculation of the Discharge Mode of a Current Pulse Generator With Flat Busbars 330
8.6. Calculation of the Resistance of Flat Busbars and the Electrodynamic Forces Acting on the Busbars 333
8.7. Conditions of Parallel Operation of Dischargers 336
References (21 titles) 348
Chapter 9. Types of Pulse Current Generators 349
9.1. High-Energy Current Pulse Generators 349
9.2. Low-Energy Current Pulse Generators 377

5/6

APPROVED FOR RELEASE: 09/17/2001 CIA-RDP86-00513R002202220012-8"

"APPROVED FOR RELEASE: 09/17/2001 CIA-RDP86-00513R002202220012-8

ASHUK, P. N. et al., TEKHNIKA BOL'SHIKH IMPUL'SNYKH TOKOV I MAGNITNYKH POLEY, Moscow, "Atomizdat", 1970

9.3. Auxiliary Devices Used in Current Pulse Generators 381
References (29 titles) 394
Chapter 10. Producing Strong Magnetic Pulse Fields 396
10.1. Field of Application of a Strong Magnetic Pulse Field. Basic Types of Solenoids and Their Peculiarities. 396
10.2. Requirements for the Energy Source 404
10.3. Calculations of the Magnetic Fields of Solenoids 409
10.4. Mechanical Strength and Construction of Solenoids for Producing Strong Magnetic Pulse Fields 432
10.5. Heat Characteristics of Coils for Obtaining Strong Pulse Magnetic Fields 445
10.6. Singularities in the Operation of Single-Turn Solenoids in Superstrong Magnetic Fields 448
References (112 titles) 466

6/6

CSO: 1860-W

- END -

APPROVED FOR RELEASE: 09/17/2001 CIA-RDP86-00513R002202220012-8"

"APPROVED FOR RELEASE: 09/17/2001 CIA-RDP86-00513R002202220012-8

UNCLASSIFIED PROCESSING DATE--16OCT70

1/2 029

TITLE--ULTRASOUND AND PHONOPHORESIS THERAPY OF PATIENTS WITH VASOMOTOR RHINITIS -U-

AUTHOR-(02)-NIKOLAYEVSKAYA, V.P., MALOSOLOV, V.A.

N

COUNTRY OF INFO--USSR

SOURCE--VESTNIK OTORINOLARINGOLOGII, 1970, NR 3, PP 46-59

DATE PUBLISHED--------70

SUBJECT AREAS--BIOLOGICAL AND MEDICAL SCIENCES

TOPIC TAGS--OTOLARYNGOLOGY, HYDROCORTISONE, ULTRASONIC BIOLOGIC EFFECT, ALLERGIC DISEASE

CONTROL MARKING--NO RESTRICTIONS

DOCUMENT CLASS--UNCLASSIFIED

STEP NO--UR/0607/70/000/003/0056/0059

PROXY REEL/FRAME--1989/1287

CIRC ACCESSION NO--AP0107762

UNCLASSIFIED

APPROVED FOR RELEASE: 09/17/2001 CIA-RDP86-00513R002202220012-8"

"APPROVED FOR RELEASE: 09/17/2001 CIA-RDP86-00513R002202220012-8

2/2 029 UNCLASSIFIED PROCESSING DATE--16OCT70

CIRC ACCESSION NO--AP0107762

ABSTRACT/EXTRACT--(U) GP-0- ABSTRACT. IN 40 PATIENTS WITH VASOMOTOR RHINITIS (IN 28-A NEUROVEGETATIVE AND IN 12-AN ALLERGIC FORM) ULTRASOUND (15 CASES) AND HYDROCORTISONE PHONOPHORESIS (25 CASES) WERE EMPLOYED FOR TREATMENT. A LABILE TECHNIQUE OF SOUNDING THE BACK AND LATERAL SLOPES OF THE NOSE WAS USED. THE REGIME WAS CONTINUOUS. THE ULTRASOUND INTENSITY RANGED FROM 0.15 TO 0.2 WT-CM PRIME2. THE EFFECT LASTED FOR FIVE MINUTES; A COURSE CONSISTED OF 12 PROCEDURES; PETROLATUM OIL WAS THE CONTACT MEDIUM. IN HYDROCORTISONE PHONOPHORESIS THE AREA INVOLVED WAS PAINTED WITH A MIXTURE OF HYDROCORTISONE EMULSION (1 ML-25 MG) WITH PETROLATUM OIL, INTO THE NASAL CAVITY TAMPONS IMPREGNATED WITH HYDROCORTISONE EMULSION WERE INTRODUCED. THE CLINCIAL EFFECT OF ULTRASOUND WAS AS FOLLOWS: DISAPPEARANCE OF SYSMPTOMS OF RHINITIS-IN 4 CASES, A SIGNIFICANT IMPROVEMENT OF THE SYMPTOMS-IN 9 CASES. HYDROCORTISONE PHONOPHORESIS PRODUCED A BETTER THERAPEUTIC RESULT: DISAPPEARANCE OF RHINITIS-IN 8, A MARKED IMPROVEMENT-IN 12 AND A SATISFACTORY EFFECT-IN 5 PATIENTS. THE CLINICAL EFFECT OF ULTRASOUND AND HYDROCORTISONE PHONOPHORESIS TREATMENT OF VASOMOTOR RHINITIS WAS ATTENDED BY REDUCTION OF EOSINOPHILIA IN THE BLOOD AND NASAL SECRETA, FUNCTIONAL NORMALIZATION OF THE CILIARY EPITHELIUM AND IMPROVEMENT OF NASAL BREATHING. FOLLOW UP (FROM 3 TO 6 MONTHS) WAS STUDIED IN 29 PATIENTS. A RELAPSE WITH A PRONOUNCED WEAKENING OF WYMPTOMS WAS NOTED IN 6 PATIENTS SUBJECTED TO ULTRASOUND THERAPY AND IN 3-TO HYDROCORTISONE PHONOPHORESIS. FACILITY: KLINCHESKOGO OTD. MOSKOVSKOGO N-I INSTITUTA UKHA, GORLA I NOSA MINISTERSTVA ZDRAVOOKHRANENIYA RSFSR.

UNCLASSIFIED

APPROVED FOR RELEASE: 09/17/2001 CIA-RDP86-00513R002202220012-8"

"APPROVED FOR RELEASE: 09/17/2001 CIA-RDP86-00513R002202220012-8

UDC 576.858.07

USSR

NIKOLAYEVSKAYA, Z. S., and AYZEN, M. S.

"Detection of Minimum Virus Concentrations in Large Volumes of Medium by Ultrafiltration Through Soluble Lanthanum-Aluminum-Alginate Ultrafilters"

Moscow, Voprosy Virusologii, No 6, 1972, pp 723-726

Abstract: Combination of purification methods (double filtration through bacterial asbestos filters treated with 0.05% aqueous sodium alginate solution) and concentration by ultrafiltration through soluble La-Al-alginate ultrafilters facilitates isolation of minimum amounts of viruses from large volumes of water. This was demonstrated by inoculating sterile, double-distilled water with poliomyelitis virus type I (Mahoney strain) at 10^{3}-10^{-3} $TCID_{50}$/ml concentration. Concentration increased virus titers by 2 lg PFU/ml as compared to values prior to ultrafiltration. The methods were sensitive to 10^{-1}-10^{-2} $TCID_{50}$/ml. The concentration factor was 400-500. Absence of virus in filtrate indicates that all virus was retained. Detection of enteroviruses and other cytopathic agents was possible by this method in 37.1% of 1-liter samples of discharge from a water treatment plant and in 37.5% of 3-liter samples from the Volga River near Kalinin.

1/1

APPROVED FOR RELEASE: 09/17/2001 CIA-RDP86-00513R002202220012-8"

"APPROVED FOR RELEASE: 09/17/2001 CIA-RDP86-00513R002202220012-8

UNCLASSIFIED PROCESSING DATE--13NOV70

1/2 019

TITLE--BRIDGE AND METALLURGICAL CRANES -U-

AUTHOR-(03)-BOGINDKIY, K.S., ZOTOV, F.S., NIKOLAYEVSKIY, G.M.

COUNTRY OF INFO--USSR

SOURCE--MOSCOW, MASHINOSTROYENIYE, 1970, 299 PP

DATE PUBLISHED--------70

SUBJECT AREAS--MECH., IND., CIVIL AND MARINE ENGR, MATERIALS

TOPIC TAGS--CRANE, CALCULATION, METAL STRESS, BRIDGE, METALLURGICAL MACHINERY, STRUCTURAL STEEL, MONOGRAPH, BIBLIOGRAPHY

CONTROL MARKING--NO RESTRICTIONS

DOCUMENT CLASS--UNCLASSIFIED

STEP NO--UR/0000/70/000/000/0001/0299

PROXY REEL/FRAME--1995/0314

CIRC ACCESSION NO--AM0116005

UNCLASSIFIED

APPROVED FOR RELEASE: 09/17/2001 CIA-RDP86-00513R002202220012-8"

"APPROVED FOR RELEASE: 09/17/2001 CIA-RDP86-00513R002202220012-8

UNCLASSIFIED PROCESSING DATE--13NOV70

2/2 019

CIRC ACCESSION NO--AM0116005

ABSTRACT/EXTRACT--(U) GP-0- ABSTRACT. TABLE OF CONTENTS: PREFACE 3. CHAPTER I TECHNICAL SPECIFICATIONS FOR CRANES 5. II BASIC DATA ON CALCULATION OF CRANES 20. III DESIGNS AND CALCULATION CHARACTERISTICS OF CRANES 60. IV METAL STRUCTURES OF CRANES 199. V UNIFICATION OF CRANES 251. BIBLIOGRAPHY 298. THE BOOK CONTAINS DESCRIPTIONS AND CALCULATIONS OF ELECTRICAL ALL PURPOSE BRIDGE CRANES OF A HIGH LOAD CAPACITY AS WELL AS METALLURGICAL CRANES. THE BOOK IS BASED MAINLY ON CRANE CONSTRUCTION EXPERIENCE OF THE KRASNOYARSK FACTORY "SIBTYAZHMASH". IT CONTAINS ALSO DATA ON CRANES MANUFACTURED BY THE NOVO-KRAMATORSK MACHINE CONSTRUCTING PLANT IM. V. I. LENINA, THE LENINGRAD PLANT OF HOISTING AND CONVEYING EQUIPMENT IM. S. M. KIROVA, AND CERTAIN FOREIGN ENTERPRISES. THE BOOK WAS WRITTEN FOR ENGINEERING TECHNICAL PERSONNEL CONNECTED WITH DESIGN, MANUFACTURE AND OPERATION OF BRIDGE AND METALLURGICAL CRANES. IT CAN BE USEFUL ALSO TO COLLEGE AND TECHNICUM STUDENTS.

UNCLASSIFIED

APPROVED FOR RELEASE: 09/17/2001 CIA-RDP86-00513R002202220012-8"

"APPROVED FOR RELEASE: 09/17/2001 CIA-RDP86-00513R002202220012-8

USSR

NIKOLAYEVSKIY, I. F., editor, Poluprovodnikovyye pribory v tekhnike elektrosvyazi, Collected Papers No 9, Moscow, "Svyaz'," 1972. 192 pp. ill. 113 ref. 81 k.

A. V. Mitrofanov, O.V. Chirkova. Blocking generator of line scanning for transistorized television 13

V.V. Artamonov. Detector with doubling of voltage in transistorized receiver 20

V.P. Chernolikhova, E. B. Gribov. Calculation of combination components of the third order in transistorized radio frequency amplifier with feed back 35

A. Ye. Botvinnik, I.K. Dzhalalov, I.N. Lyzlov, V.G. Pavlov. Device for measurement of the probability of an increase by a signal of a given threshold level 42

G.B. Al'tshuller, N.N. Yelfimov. Special features of the use of varicaps as control elements of crystal oscillators 46

Yu.V. Korchagin. Output conductivity of power high-frequency transistor 55

2/5

APPROVED FOR RELEASE: 09/17/2001 CIA-RDP86-00513R002202220012-8"

"APPROVED FOR RELEASE: 09/17/2001 CIA-RDP86-00513R002202220012-8

USSR

NIKOLAYEVSKIY, I. F., editor, Poluprovodnikovyye pribory v tekhnike elektrosvyazi, Collected Papers No 9, Moscow, "Svyaz'," 1972. 192 pp. ill. 113 ref. 81 k.

Yu.V. Korchagin. To a problem concerning the circuit diagram of a transistorized power amplifier 57

O.V. Alekseyev, V.I. Govorukhin. Concerning the construction of a broadband transistorized power amplifier 66

V.V. Gruzdev, I.A. Popov. Calculation of the parameters of a circuit and the efficiency of a transistorized single-cycle key [klyuchevoy] oscillator 78

E.A. Akchurin. Analysis of frequency converter using a tunnel diode 86

V.V. Maclennikov. Selective RC-amplifier with integrating and differentiating amplifying stages 94

V.A. Bolonin, V.P. Petropavlovskiy, N.V. Sinitsyn. Phase-stable channel amplifiers 105

S.F. Sikolenko, V.M. Nemchinov. Transistorized d-c measuring amplifier 114

3/4

APPROVED FOR RELEASE: 09/17/2001 CIA-RDP86-00513R002202220012-8"

"APPROVED FOR RELEASE: 09/17/2001 CIA-RDP86-00513R002202220012-8

USSR

NIKOLAYEVSKIY, I. F., editor, Poluprovodnikovyye pribory v tekhnike elektro-svyazi, Collected Papers No 9, Moscow, "Svyaz'," 1972. 192 pp. ill. 113 ref. 81 k.

K.A. Petrosyan. Element of transistor-transistorized logic with emitter-emitter nonlinear coupling 167

Yu.V. Zavrazhnov. Device for protection of stages of radio apparatus 173

A.G. Kologrivov. Some problems of determining the limiting potentialities of broadband amplifier circuits using transistors 177

I.N. Zadubovskiy, B.N. Krasnogolovyy. Sawtooth voltage generator with accelerated section using semiconductor devices 182

5/5

RELEASE: 09/17/2001 CIA-RDP86-00513R0022022200

USSR

NIKOLAYEVSKIY, I. F., editor, Poluprovodnikovyye pribory v tekhnike elektro-svyazi, Collected Papers No 9, Moscow, "Svyaz'," 1972. 192 pp. ill. 113 ref. 81 k.

V.P. Galenko. Push-pull circuit, of low criticality to the straggling of transistor parameters 123

G.M. Nikirtichan. Analysis of circuits of multistage amplifiers with respect to equivalent parameters recorded in the form of the parameters of a transistor 127

Ye.Ye. Mikhaylov. Converter of d-c voltage with pulse stabilization 142

A.G. Vilenkin, Ye.A. Gur'yev. Pulse voltage regulator with low level of variable components 150

V.P.D'yakonov, V.I. Bosyy, Yu.A. Kuznetsov, A.S.Kostryukov, V.A.Tsiganko Avalanche transistor and its use in circuit techniques 159

4/5

"APPROVED FOR RELEASE: 09/17/2001 CIA-RDP86-00513R002202220012-8

UDC 621.382.11:621.382.345.029.62

USSR

NIKOLAYEVSKIY, I. F., POLEVOY, V. V., SOROKIN, Ye. P.

"On the Parameters of a Substitution Circuit for Microwave Power Transistors at High Injection Levels"

Moscow, Poluprovodnikovyye Pribory i ikh Primeneniye, No 24, Izd-vo "Sovetskoye Radio", 1970, pp 42-51

Abstract: The authors consider a simplified physical equivalent circuit for a high-frequency drift-type power transistor in a common-emitter connection. The parameters of the circuit are found by measuring the absolute values of the input impedance, current gain, slope of the transfer characteristic, time constant of the collector circuit, output impedance of the transistor and capacitance of the collector circuit, and the frequency dependences of these quantities. It is pointed out that the inductances of the base, emitter and collector circuits and parasitic reactive elements of the measurement circuits have an appreciable effect on determination of the low-signal parameters of planar power transistors at high injection levels. Eight figures, bibliography of two titles.

1/1

APPROVED FOR RELEASE: 09/17/2001 CIA-RDP86-00513R002202220012-8"

"APPROVED FOR RELEASE: 09/17/2001 CIA-RDP86-00513R002202220012-8

USSR

NIKOLAYEVSKIY, IOSIF FEDOROVICH, and IGUMNOV, DMITRY VASIL'YEVICH

"Parameters and Maximum Operating Modes of Transistors" (Parametry i Predel'nyye Rezhimy Raboty Tranzistorov), Moscow, Izd-vo "Sovetskoye Radio," 1971, 29,000 copies, 384 pages

Abstract: The book contains a wealth of information concerning the physical phenomena in the transistor needed by the engineer working in the development and operation of radio-electronic equipment.

The electrical and thermal parameters of the transistor, its characteristics and equivalent circuits, maximum permissible direct and pulsed currents, voltages and power are examined. Possibilities are shown for utilizing a transistor as an amplifier and switch in the reverse switch-on mode and in the micromode. Special attention is given to the relations of transistor parameters and recommendations for determining its specifications, which are omitted from handbooks and technical specifications, are given.

The book is intended for engineer-developers of transistorized equipment and is also recommended as a text book for students of the corresponding faculties in universities.

1/2

APPROVED FOR RELEASE: 09/17/2001 CIA-RDP86-00513R002202220012-8"

"APPROVED FOR RELEASE: 09/17/2001 CIA-RDP86-00513R002202220012-8

USSR

NIKOLAYEVSKIY, IOSIF FEDOROVICH, et al., "Parameters and Maximum Operating Modes of Transistors" (Parametry i Predel'nyye Rezhimy Raboty Tranzistorov), Moscow, Izd-vo "Sovetskoye Radio," 1971, 29,000 copies, 384 pages

The book has 29 tables, 132 figures, and 145 citations. Chapter headings are as follows:

		Page
Chapter 1.	Classification of Parameters and Characteristics of Transistors	11
Chapter 2.	Transistor Volt-Ampere Characteristics	37
Chapter 3.	Small Signal Parameters	86
Chapter 4.	Large Signal Parameters	127
Chapter 5.	Thermal, Limiting, and Peak Transistor Parameters	151
Chapter 6.	Micromode Parameters	241
Chapter 7.	Inverse Switching Parameters	284

APPROVED FOR RELEASE: 09/17/2001 CIA-RDP86-00513R002202220012-8"

"APPROVED FOR RELEASE: 09/17/2001 CIA-RDP86-00513R002202220012-8

UDC 621.382.3

USSR

NIKOLAYEVSKIY, I.F., POLEVOY, V.V., SOROKIN, YE.P.

"On The Parameters Of The Equivalent Circuits Of Microwave Power Transistors With High Injection Levels"

V sb. Poluprovodn. pribory i ikh primeneniye (Semiconductor Devices And Their Application--Collection Of Works), Issue 24, Moscow, "Sov.radio," 1970, pp 42-51 (from RZh--Elektronika i yeye primeneniye, No 4, April 1971, Abstract No 4B238)

[No abstract]

1/1

APPROVED FOR RELEASE: 09/17/2001 CIA-RDP86-00513R002202220012-8"

"APPROVED FOR RELEASE: 09/17/2001 CIA-RDP86-00513R002202220012-8

UDC 621.382.3

USSR

NIKOLAYEVSKIY, I. F., IGUMNOV, D. V.

"Parameters and Maximum Performance of Transistors"

Parametry i predel'nyye rezhimy raboty tranzistorov (cf. English above), "Sov. radio," 1971, 390 pp, ill., 1 r 36 k (from RZh--Elektronika i yeye primeneniye, No 5, May 1971, Abstract No 5B155K)

Translation: The book contains the combination of data on the physical phenomena in transistors which is necessary for engineers concerned with the development and operation of radioelectronic apparatus. Considered are the electrical and thermal parameters of transistors, their characteristics and equivalent circuits, and the maximum permissible d-c and pulse current, voltage, and power. The possibilities are shown of using transistors as amplifiers and switches in an inverse connected and in microregimes. Special consideration is given to the relations of transistor parameters and recommendations with respect to the determination of data lacking in reference books and in technical specifications. The book is intended for engineer-developers of transistorized apparatus, and can also be recommended as school equipment for students of corresponding

1/2

APPROVED FOR RELEASE: 09/17/2001 CIA-RDP86-00513R002202220012-8"

"APPROVED FOR RELEASE: 09/17/2001 CIA-RDP86-00513R002202220012-8

USSR

NIKOLAYEVSKIY, I. F., IGUMNOV, D. V., Parametry i predel'nyye rezhimy raboty tranzistorov (cf. English above), "Sov, radio," 1971, 390 pp, ill., 1 r 36 k (from RZh--Elektronika i yeye primeneniye, No 5, May 1971, Abstract No 5B155K)

faculties of higher educational institutions. 132 ill. 29 tab. 145 ref. Summary.

2/2

APPROVED FOR RELEASE: 09/17/2001 CIA-RDP86-00513R002202220012-8"

"APPROVED FOR RELEASE: 09/17/2001 CIA-RDP86-00513R002202220012-8

UDC: 537.53

USSR

NIKOLAYEVSKIY, L. S., PODMOSHENSKIY, I. V.

"Precision Measurement of the Continuous Emission of a Nitrogen Plasma"

Leningrad, Optika i Spektroskopiya, Vol 33, No 3, Sep 72, pp 440-443

Abstract: The coefficients of continuous absorption of a nitrogen plasma are measured in the spectral region of 15 000-22 000 cm^{-1} for two pressures 0.50 and 0.75 atmosphere, at respective currents of 700 and 800 A, and temperatures of 19 000 and 20 000 K. The absorption coefficients were determined from the pulse discharge emission. The spectrum was photographically registered. The relative error of the measurements was 10%. It is shown that the experimental data differ from theory by no more than 15%. The data given in this paper can be utilized in measuring electron concentration with respect to continuous emission of a nitrogen plasma, and also in determining the pressure in plasma sources.

1/1

APPROVED FOR RELEASE: 09/17/2001 CIA-RDP86-00513R002202220012-8"

"APPROVED FOR RELEASE: 09/17/2001 CIA-RDP86-00513R002202220012-8

UDC 632.95'

USSR

SKAVINSKIY, YA. P., BABIN, YE. P., SERGEYEV, YE. V., and NIKOLAYEVSKIY, N. N.

"Method of Preparing Acid Chlorides of Chlorinated Benzoic Acids"

USSR Authors' Certificate No 255250, filed 21 Sep 68, published 1 Apr 70 (from RZh-Khimiya, No 20 (II), 25 Oct 70, Abstract No 20 N613P by T. A. BELYAYEVA)

Translation: 43.5 g PhCCCl are chlorinated at a temperature of 110-115° in Cl_2 gas (30 g/hr) for 3 hr in the presence of 0.1-10% FeS as catalyst. A mixture is obtained containing eight acid chlorides of di-, tri- and tetrachlorobenzoic acids, which are used in the production of herbicides.

1/1

APPROVED FOR RELEASE: 09/17/2001 CIA-RDP86-00513R002202220012-8"

"APPROVED FOR RELEASE: 09/17/2001 CIA-RDP86-00513R002202220012-8

Immunology

UDC 612.017

USSR

SHURYGIN, D. Ya., Professor, Col Med Serv. NIKOLAYEVSKIY, V. V., Candidate of Medical Sciences, Lt Col Med Serv, DYGIN, V. P., Doctor of Medical Sciences, Lt Col Med Serv, and KALUZHENKO, R. K., Candidate of Medical Sciences, Lt Col Med Serv

"On the Immunological Reactivity of Military Servicemen"

Moscow, Voyenno-Meditsinskiy Zhurnal, No 2, 1973, pp 61-65

Abstract: Military servicemen were subjected to immunological tests to determine effects of various aspects of service on immunological makeup. Environmental aspects were studied in the first stage: While servicemen in the south of Western Siberia were immunologically normal, those in the north manifested reduced immunological reactivity. Allergic reactions are pronounced in isolated collectives. Low lysozyme, complement, and reactivity were characteristic of individuals in their first 2 months of service. Lysozyme and antibody titers were lowest in April-May. The second stage involved types of combat activity, physical training, and vaccinations: While group antigen and lysozyme titers were higher in daytime than at night during routine duty, the pattern reversed itself during 24-hour duty. Lysozyme decreased and auto-antibodies appeared more frequently after combat exercises. Physical training increased reactivity.

1/3

APPROVED FOR RELEASE: 09/17/2001 CIA-RDP86-00513R002202220012-8"

"APPROVED FOR RELEASE: 09/17/2001 CIA-RDP86-00513R002202220012-8

USSR

SHURYGIN, D. Ya., et al., Voyenno-Meditsinskiy Zhurnal, No 2, 1973, pp 61-65

Autosensitization arose in the 10th-45th days after preventive immunization. The third stage involved harmful environmental factors: While very long electromagnetic waves were not found to cause problems, ultrahigh-frequency fields caused some complement reduction and occasional appearance of antibodies, particularly after long exposure. Immunological reactions in the presence of internal brain injuries and burns were analyzed in the fourth stage: Acute brain injury caused quite pronounced spontaneous blast transformation of lymphocytes and made them cytopathic against homologous fibroblasts for months and years. The same problems arose with burns. Auto-allergic processes played a major role in burn cases. Disease-associated changes were studied in the final stage. Rheumatism caused formation of tissue auto-antibodies to degrees depending on the disease form. Liver auto-antibodies were detected with Botkin's disease in quantities directly correlated with phase and severity of illness. They also appeared with chronic hepatitis and cirrhosis of the liver. Acute and chronic diffuse glomerulonephritis caused production of kidney auto-antibodies. Acute and chronic pneumonia caused pronounced auto-allergies with production of various auto-antibodies, and general reduction of immunological reactivity. Dermatosis disrupted lymphocyte and neutrophil function, as did chronic tonsilitis. Among these diseases, changes in reactivity are probably

2/3

APPROVED FOR RELEASE: 09/17/2001 CIA-RDP86-00513R002202220012-8"

"APPROVED FOR RELEASE: 09/17/2001 CIA-RDP86-00513R002202220012-8

USSR

SHURYGIN, D. Ya., et al., Voyenno-Meditsinskiy Zhurnal, No 2, 1973, pp 61-65

pathogenic only with rheumatism, nephritis, and hepatitis. This information would be helpful in the diagnosis, prevention, and treatment of immunopathy involved with military service.

3/3

APPROVED FOR RELEASE: 09/17/2001 CIA-RDP86-00513R002202220012-8"

"APPROVED FOR RELEASE: 09/17/2001 CIA-RDP86-00513R002202220012-8

(18)

USSR

BALOSHIN, O. N., BLAGORODOV, A. M., BOLONKIN, B. V., VLADIMIRSKIY, V. V., GORIN, YU. P., GRIGOR'YEV, V. K., GRISHIN, A. P., YEROFEYEV, I. A., KOROL'KOV, I. YA., LUZIN, V. N., MILLER, V. V., NIKOLAYEVSKIY, YE. S., PETRUKHIN, V. N., PLIGIN, YU. S., PONOMAREV, L. A., SIROTKIN, S. M., SOKOLOVSKIY, V. V., TARASOV, YE. K., TIKHOMIROV, G. D., TROSTINA, K. A., TURCHANOVICH, L. K., and SHKURENKO, YU. P., Institute of Theoretical and Experimental Physics GKI AE (State Committee for the Use of Atomic Energy)

"The $K^- p \rightarrow \bar{K}^0 n$ Charge Exchange Reaction at a Pulse of 39 Gev/sec"

Moscow, Yadernaya Fizika, Vol 18, No 3, Sep 73, pp 542-544

Abstract: The authors present the measurement results from studying the charge exchange reaction of K^--mesons on protons ($K^- p \rightarrow \bar{K}^0 n$) at a pulse of 39 Gev/sec. The study was carried out using the ITEF 6-m magnetic track spectrometer. The working volume of the magnetic field of the spectrometer was 1.0 x 1.5 x 6 m. Twelve optical spark chambers were located inside the magnet, with each chamber having eight spark gaps (10 mm each). The chamber electrodes consisted of two layers of aluminum foil 14 microns thick. The photographs were taken through a special slit in the magnet yoke. A mirror system made it possible to obtain three stereoprojections of all of the chambers

1/2

APPROVED FOR RELEASE: 09/17/2001 CIA-RDP86-00513R002202220012-8"

"APPROVED FOR RELEASE: 09/17/2001 CIA-RDP86-00513R002202220012-8

(18)

USSR

BALOSHIN, O. N., et al., Yadernaya Fizika, Vol 18, No 3, Sep 73, pp 542-544

with one camera. The reaction was studied on the negative particle beam of the IFVE accelerator. The K^--mesons were distinguished by a differential Cerenkov counter. The beam was focused on a liquid hydrogen target 40 cm long which was set approximately three meters from the first chamber of the spectrometer. Approximately $5 \cdot 10^7$ K^--mesons were passed through the equipment and 1020 photographs taken. Pairs of uniformly charged tracks were measured on the photographs. The measurement results were then processed on the Razdan-3 computer. Only 270 intersecting tracks were found. A graph is given for the differential cross section of the reaction. The results show that the cross section value of 7.4 ± 1.2 microbarns obtained by the authors in comparison to data obtained for lower energies elsewhere shows the logarithmic dependence of the charge exchange cross section on the pulse, equal to -1.58 ± 0.05. The authors thank K. G. Boreskov, A. M. Lapidus, S. T. Sukhorukov, and K. A. Ter-Martirosyan for their presentation of the computational results as the dependence of the differential cross section onpulse transfer (do/dt). This dependence is compared with predictions of the Regge pole model.

1/1

APPROVED FOR RELEASE: 09/17/2001 CIA-RDP86-00513R002202220012-8"

"APPROVED FOR RELEASE: 09/17/2001 CIA-RDP86-00513R002202220012-8

USSR

BALOSHIN, O. N., VLADIMIRSKIY, V. V., DUKHOVSKOY, I. A., KISHKURNO, V. V., KRUTENKOVA, A. P., KULIKOV, V. V., NIKOLAYEVSKIY, YE. S., PETRUKHIN, V. N., RADKEVICH, I. A., and FEDORETS, V. S., Institute of Theoretical and Experimental Physics of the State Committee for the Use of Atomic Energy

"Study of the Reaction $\pi^- p \rightarrow pK^-$ at a Momentum of 3.25 GeV/c With a High Momentum Transfer"

Moscow, Yadernaya Fizika, Vol 14, No 1, Jul 71, pp 131-133

Abstract: The authors investigate the spectrum of missing masses of a proton in the reaction $\pi^- p \rightarrow pK^-$ for high transfer momentums using a track spectrometer with optical spark chambers in a magnetic field. They found the momentum of the primary π^- mesons to be 3.25 GeV/c, and they measured the differential cross section of the formation of the ρ^- meson in the range of angles $-1 \leq \cos \theta^* \leq -0.0005$, which was found to be equal to 28.2 ± 9.8 μbarn/sterad. Figure 1 shows the spectrum of the missing masses in this reaction for a momentum of the π^- meson of 3.25 GeV/c. Figure 2 shows the cross section of the creation of the ρ^- meson backwards in the reaction $\pi^- p \rightarrow p\rho^-$ as a function of the momentum of the π^- mesons. The article contains 2 figures and 5 bibliographic entries. 1/1

APPROVED FOR RELEASE: 09/17/2001 CIA-RDP86-00513R002202220012-8"

"APPROVED FOR RELEASE: 09/17/2001 CIA-RDP86-00513R002202220012-8

UNCLASSIFIED PROCESSING DATE--13NOV70

1/3 019

TITLE--PREASSEMBLY TEST OF THE WORLD'S LARGEST OPTICAL TELE COPE -U-

AUTHOR-(02)-GREYDINGER, A.G., NIKOLAYEVSKIY, YE.YA.

COUNTRY OF INFO--USSR

SOURCE--MOSCOW, MONTAZHNYYE I SPETSIAL'NYYE RABOTY V STROITEL'STVA, NO 4, 1970, PP 26-29

DATE PUBLISHED--------70

SUBJECT AREAS--ASTRONOMY,ASTROPHYSICS, NAVIGATION

TOPIC TAGS--AZIMUTHAL TELESCOPE, OPTIC MIRROR, TELESCOPIC EQUIPMENT, TELESCOPE COMPONENT, AZIMUTH, TELESCOPE

CONTROL MARKING--NO RESTRICTIONS

DOCUMENT CLASS--UNCLASSIFIED

PROXY REEL/FRAME--3004/1324 STEP NO--UR/9087/70/000/004/0026/0029

CIRC ACCESSION NO--AP0131770

UNCLASSIFIED

APPROVED FOR RELEASE: 09/17/2001 CIA-RDP86-00513R002202220012-8"

"APPROVED FOR RELEASE: 09/17/2001 CIA-RDP86-00513R002202220012-8

UNCLASSIFIED PROCESSING DATE--13NOV70

2/3 019

CIRC ACCESSION NO--AP0131770

ABSTRACT/EXTRACT--(U) GP-0- ABSTRACT. MICROFICHE OF ABSTRACT CONTAINS GRAPHIC INFORMATION. ASSEMBLY OF THE BTA (LARGE AZIMUTHAL TELESCOPE), THE WORLD'S LARGEST OPTICAL TELESCOPE, IS NOW BEING COMPLETED IN THE NORTHERN CAUCASUS AT AN ELEVATION MORE THAN 2,000 M ABOVE SEA LEVEL. THE MIRROR DIAMETER IS 6 M. IT WEIGHS ABOUT 800 TONS AND ITS HEIGHT IS GREATER THAN 40 M. THE INSTRUMENT WAS DESIGNED AND CONSTRUCTED BY THE LENINGRAD OPTICAL MECHANICAL COMBINE UNDER THE DIRECTION OF B. K. IOANNISIANI. IN CONTRAST TO ALL EXISTING LARGE TELESCOPES, THE BTA DOES NOT HAVE AN EQUATORIAL MOUNTING BUT INSTEAD A SO CALLED ALTAZIMUTHAL MOUNTING IN WHICH ONE OF THE AXES IS ALWAYS VERTICAL, WHEREAS THE OTHER LIES IN THE HORIZONTAL PLANE. SUCH A MOUNTING HAS NEVER BEEN USED BEFORE IN ANY COUNTRY. THE TELESCOPE CONSISTS OF TWO PRINCIPAL UNITS: SUPPORTING ROTATING AND TUBE. THE TUBE IS NOT AN ORDINARY CYLINDER WITH OPTICAL PARTS INSIDE, BUT A ROD CONSTRUCTION WITH SHAFTS AND RINGS ENSURING STABILITY OF CENTERING OF OPTICAL PARTS AND RIGIDITY OF THE ENTIRE INSTRUMENT. A HOLDER WITH THE MAIN MIRROR IS ATTACHED TO THE LOWER RING OF THE TUBE. THE UPPER RING WITH THE PRIMARY FOCUS AND THE OBSERVER'S CABIN IS CONNECTED TO THE LOWER RING BY MEANS OF UPPER AND LOWER SHAFTS. THE TUBE IS 27 M LONG AND WEIGHS ABOUT 275 TONS. UPON COMPLETION OF THE PREASSEMBLY EXAMINATION AT THE FACTORY, WHICH IS DESCRIBED HERE IN GREAT DETAIL, THE TELESCOPE WAS BROKEN DOWN INTO INDIVIDUAL COMPONENTS AND ASSEMBLIES, TAKING ADMISSIBLE SIZE OF INDIVIDUAL PARTS INTO ACCOUNT, FOR TRANSPORTATION BY RIVER.

UNCLASSIFIED

APPROVED FOR RELEASE: 09/17/2001 CIA-RDP86-00513R002202220012-8"

"APPROVED FOR RELEASE: 09/17/2001 CIA-RDP86-00513R002202220012-8

UNCLASSIFIED PROCESSING DATE--13NOV70

3/3 019

CIRC ACCESSION NO--AP0131770

ABSTRACT/EXTRACT--TELESCOPE COMPONENTS AND LARGE, HEAVY PIECES WERE LOADED ON A BARGE AT LENINGRAD AND TRANSPORTED ALONG THE VOLGA BALTIC AND VOLGA DON CANALS TO ROSTOV WHERE THEY WERE LOADED ONTO TRUCK PLATFORM TRAILERS. AT THE CONSTRUCTION SITE ASSEMBLY WAS WITH A 100 TON GANTRY CRANE. DIAGRAM OF BTA TELESCOPE. 1) REINFORCES CONCRETE FOUNDATION; 2) VERTICAL AXIS; 3) HYDROSTATIC SUPPORTS; 4) SPHERICAL RING; 5) PLATFORM; 6) SIMULATOR OF MAIN MIRROR AND MIRROR HOLDER; 7) LOWER RING; 8) LOWER SHAFTS; 9) SUPPORTS; 10) CENTRAL SUPPORT; 11) UPPER SHAFTS; 12) UPPER RING; 13) PRIMARY FOCUS; 14) OBSERVER'S CABIN.

UNCLASSIFIED

APPROVED FOR RELEASE: 09/17/2001 CIA-RDP86-00513R002202220012-8"

"APPROVED FOR RELEASE: 09/17/2001 CIA-RDP86-00513R002202220012-8

1/2 009 UNCLASSIFIED PROCESSING DATE--04DEC70

TITLE--ELECTRICAL CONDUCTIVITY OF MANGANESE OXIDES -U-

AUTHOR-(02)-NIKOLAYSHVILI, G.U., KEKELIDZE, M.A.

COUNTRY OF INFO--USSR

SOURCE--SOOBSHCH. AKAD. NAUK GRUZ. SSR 1970, 57(2), 393-5

DATE PUBLISHED--------70

SUBJECT AREAS--CHEMISTRY, PHYSICS

TOPIC TAGS--ELECTRIC CONDUCTIVITY, MANGANESE OXIDE, RESISTIVITY, IMPURITY CONDUCTIVITY

CONTROL MARKING--NO RESTRICTIONS

DOCUMENT CLASS--UNCLASSIFIED

PROXY REEL/FRAME--3001/1389 STEP NO--UR/0251/70/057/002/0393/0395

CIRC ACCESSION NO--AP0126927

UNCLASSIFIED

APPROVED FOR RELEASE: 09/17/2001 CIA-RDP86-00513R002202220012-8"

"APPROVED FOR RELEASE: 09/17/2001 CIA-RDP86-00513R002202220012-8

2/2 009 UNCLASSIFIED PROCESSING DATE--04DEC70

CIRC ACCESSION NO--AP0126927

ABSTRACT/EXTRACT--(U) GP-0- ABSTRACT. THE TEMP. DEPENDENCE OF THE ELEC. RESISTIVITY, RHO, OF BETA,MNO SUB2, BETA,MN SUB2 O SUB3, AND BETA,MN SUB3 O SUB4 ON UNIFORM HEATING FROM ROOM TEMP. TO 1200DEGREES WAS STUDIED. AT 25DEGREES, RHO EQUALS 6.3, 2.4 TIMES 10 PRIME4, AND 7.5 TIMES 10 PRIME6 OHM-M, RESP. DURING DISSOCN., THE ELEC. RESISTANCE OF THE SAMPLES INCREASES IN THE ORDER BETA,MNO SUB2 IS SMALLER THAN BETA,MN SUB2 O SUB3 IS SMALLER THAN BETA,MN SUB3 O SUB4 IS SMALLER THAN GAMMA,MN SUB3 O SUB4. THE TEMP. DEPENDENCE OF RHO OF THE OXIDES IS EXPRESSED BY THE FORMULA LOG RHO EQUALS A PLUS B TIMES 10 PRIME3-T. THE ACTIVATION ENERGY AND THE CRIT. TEMP. OF TRANSITION FROM INPURITY COND. TO INTRINSIC COND. WERE CALCD. FACILTIY: INST. MET., TBILISI, USSR.

UNCLASSIFIED

APPROVED FOR RELEASE: 09/17/2001 CIA-RDP86-00513R002202220012-8"

"APPROVED FOR RELEASE: 09/17/2001 CIA-RDP86-00513R002202220012-8

USSR UDC 669.71.053.4

NIKOLAYSHVILI, N. M., GILASHVILI, L. V., PAVLOVA, L. V.

"Obtaining Alumina from High Grade Georgian Aluminum Raw Material"

Tr. Kavkaz in-ta mineral'n. syr'ya (Works of the Caucasian Institute of Mineral Raw Materials), 1971, vyp. 9 (11), pp 363-365 (from RZh--Metallurgiya, No 4, Apr 72, Abstract No 4G178)

Translation: A study was made of syenites, trachytic and pumice tuffs by the method of chemical beneficiation of the rock by alkaline solutions in autoclaves and open vessels at atmospheric pressure with subsequent sintering of the concentrates obtained with $CaCO_3$ and Na_2CO_3 and also by the method of direct sintering of the rock with $CaCO_3$ and Na_2CO_3. The pumice tuffs are the most easily stripped rock. The concentrates obtained after chemical beneficiation contain 23-27% Al_2O_3 and 36-40% SiO_2. When sintering these concentrates at 1,150-1,200° with $CaCO_3$ and Na_2CO_3, the Al_2O_3 extraction was 81-91% and alkali was 81-85%. By the direct sintering scheme, the Al_2O_3 extraction was 80-28% and alkali, 75-78%. The optimal conditions of reduction of alunitized rock are the following: temperature 620-650°, duration 1 hour, amount of reducing

APPROVED FOR RELEASE: 09/17/2001 CIA-RDP86-00513R002202220012-8"

"APPROVED FOR RELEASE: 09/17/2001 CIA-RDP86-00513R002202220012-8

USSR

NIKOLAYSHVILI, N. M., et al., Tr. Kavkaz in-ta mineral'n. syr'ya, 1971, vyp. 9 (11), pp 363-365

agent 2% of the sample weight, fineness of crushing 270 mesh. The Al_2O_3 extraction was greater than 68%. The leaching out of the reduced alunitized rock under the conditions of alkali concentration 100-150 grams/liters, time 30 minutes, temperature 95-98°, S: L = 1:4, permits extraction of 67-68% of the Al_2O_3. With sintering of the reduced alunitized rock, the Al_2O_3 extraction was 92%.

2/2

APPROVED FOR RELEASE: 09/17/2001 CIA-RDP86-00513R002202220012-8"

"APPROVED FOR RELEASE: 09/17/2001 CIA-RDP86-00513R002202220012-8

USSR UDC 669.883'891.053.28

NIKOLAYSHVILI, N. M., and TOROTADZE, I. I.

"Preliminary Technological Investigation of Rock Salt of the Avan Deposit in the Armenian SSR as Raw Material for the Production of Metallic Sodium and Calcium Chloride"

Tr. Kavkaz. in-ta mineral'n. syr'ya (Works of Caucasus Institute of Mineral Raw Materials), 1970, vyp 8(10), (pp 111-114) (from RZh-Metallurgiya, No 3, Mar 71, Abstract No 3 G176 by S. KRIVONOSOVA)

Translation: The article shows the possibility of obtaining sodium and calcium chloride from salt of the Avan deposit. The most acceptable process for this purpose is the vacuum-thermal process consisting in the reduction of metal chlorides during vacuum heating. Used as reducing agent are aluminum, Al-Si, and Fe-Si alloys with the addition of CaO to the charge. Optimum parameters of the metallic sodium production process: temperature 800-850°; charge composition NaCl 40%, FeSi 28%, CaO 32%, initial materials -- rock salt of the Avan depsoit, lime from the Tsiteli-Tskaro deposit, and Fe-Si with specified chemical composition are dehydrated at 600° and held for 1 hour. The limestone is calcined at 1150° and held for 1.5 hour. 3 tables.
1/1

APPROVED FOR RELEASE: 09/17/2001 CIA-RDP86-00513R002202220012-8"

"APPROVED FOR RELEASE: 09/17/2001 CIA-RDP86-00513R002202220012-8

USSR UDC:539.122.13

NIKOLAYSHVILI, SH. S. and DZHASHIASHVILI, G. N.

"Calculation of the Space-Energy Distribution of Secondary Annihilation γ-Quanta"

Moscow, Atomnaya Energiya, Vol 36, No 1, Jan 74, pp 74-75

Abstract: This work presents a new approach to the calculation of the process of formation of electron-positron pairs as γ-quanta pass through matter. The apparatus of conjugate transfer equations in the form developed by G. I. Marchuk et al is used. The necessary addition to the dose accumulation factor resulting from annihilation radiation is calculated for a flat perpendicular source of multienergetic γ-quanta of unit power in an infinite homogenous medium.

1/1

APPROVED FOR RELEASE: 09/17/2001 CIA-RDP86-00513R002202220012-8"

"APPROVED FOR RELEASE: 09/17/2001 CIA-RDP86-00513R002202220012-8

USSR UDC 542.91:547.963.3

KRAYEVSKIY, A. A., DEGTEREV, Ye. V., GOTTIKH, B. P., and NIKOLENKO, L. N.,
Institute of Molecular Biology, Academy of Sciences USSR

"Aminoacyl Derivatives of Nucleosides, Nucleotides and Polynucleotides. 10. The Feasibility of Using Diethyl Phosphate Imidazolide for the Synthesis of 3'(2')-O-Aminoacyl Nucleotides"

Moscow, Izvestiya Akademii Nauk SSSR, Seriya Khimicheskaya, No 8, Aug 71, pp 1730-1736

Abstract: In the search for imidazole compounds which react in an aqueous medium with carboxylic acids to give their imidazolides, the authors studied the interaction of diethyl phosphate imidazolide with acetic acid and tert.-butylhydroxycarbonyl alanine in an aqueous medium and in absolute isopropanol. It was found spectrophotometrically that the corresponding imidazolides are formed. It is shown that it is possible in principle to use diethyl phosphate imidazolide as activating agent for the synthesis of 3'(2')-aminoacyl nucleotides as a result of the reaction between amino acid and nucleotide in an aqueous medium, but that this reactant is not effective enough, since the rate of its hydrolysis is of the same order as the rate of N-acylimidazole hydrolysis.

1/2

APPROVED FOR RELEASE: 09/17/2001 CIA-RDP86-00513R002202220012-8"

"APPROVED FOR RELEASE: 09/17/2001 CIA-RDP86-00513R002202220012-8

USSR

KRAYEVSKIY, A. A., et al., Izvestiya Akademii Nauk SSSR, Seriya Khimicheskaya, No 8, Aug 71, pp 1730-1736

The authors thank Yu. A. TETERIN for taking PMR spectra.

2/2

APPROVED FOR RELEASE: 09/17/2001 CIA-RDP86-00513R002202220012-8"

"APPROVED FOR RELEASE: 09/17/2001 CIA-RDP86-00513R002202220012-8

USSR UDC 547.963.3 + 547.853

NIKOLENKO, L. N., RATMANOVA, K. I., TOLMACHEVA, N. S.

"Synthesis of Thymidine-3',5'-diphosphate"

Leningrad, Zhurnal Obshchey Khimii, Vol 40, No 9, Sep 70, pp 2136-2137

Abstract: Phosphorylation of unprotected thymidine was carried out by excess β-cyanoethylphosphate in the presence of dicyclohexylcarbodiimide or mesitylene sulfochloride at 20° in pyridine. After ammoniacal hydrolysis the reaction mixture was separated on a cellulose column in a linear gradient of ammonium bicarbonate. Thymidine-3',5'-diphosphate can also be obtained by phosphorylation of thymidine-3'-(β-cyanoethyl)phosphate with an equimolar quantity of β-cyanoethylphosphate in the presence of mesitylenesulfochloride. The authors thank R. I. TATARSKIY for providing the enzyme S-nycleotidease.

1/1

APPROVED FOR RELEASE: 09/17/2001 CIA-RDP86-00513R002202220012-8"

"APPROVED FOR RELEASE: 09/17/2001 CIA-RDP86-00513R002202220012-8

USSR

UDC: 547.26'118.07

NIKOLENKO, I. N., RATMANOVA, K. I., TOLMACHEVA, N. S.

"A Method of Synthesizing Thymidine 5'-Monophosphate"

Moscow, Otkrytiya, Izobreteniya, Promyshlennyye Obraztsy, Tovarnyye Znaki, No 13, May 72, Author's Certificate No 335251, Division C, filed 13 Jul 70, published 11 Apr 72, p 88

Translation: This Author's Certificate introduces a method of synthesizing thymidine 5'monophosphate by phosphorylating the corresponding nucleoside. As a distinguishing feature of the patent, the process is simplified by phosphorylating the unsubstituted nucleoside with an excess of β-cyanethyl phosphate in the presence of mesitylene sulfochloride.

1/1

APPROVED FOR RELEASE: 09/17/2001 CIA-RDP86-00513R002202220012-8"

"APPROVED FOR RELEASE: 09/17/2001 CIA-RDP86-00513R002202220012-8

1/2 021 UNCLASSIFIED PROCESSING DATE--13NOV70

TITLE--OPTICAL GLASS -U-

AUTHOR-(05)-NIKOLINA, G.P., KHALILEV, V.D., IVANOV, V.N., PETROVSKIY, G.T., TYLEVICH, F.G.

COUNTRY OF INFO--USSR

SOURCE--U.S.S.R. 267,030

REFERENCE--OTKRYTIYA, IZOBRET., PROM. OBRAZTSY, TOVARNYE ZNAKI 1970,

DATE PUBLISHED--01APR70

SUBJECT AREAS--MATERIALS

TOPIC TAGS--CHEMICAL PATENT, GLASS COMPOSITION, OPTIC GLASS, CALCIUM FLUORIDE, ALUMINUM FLUORIDE, BERRYIUM FLUORIDE, YTTRIUM, STRONTIUM COMPOUND, POTASSIUM COMPOUND, LANTHANUM COMPOUND

CONTROL MARKING--NO RESTRICTIONS

DOCUMENT CLASS--UNCLASSIFIED

PROXY REEL/FRAME--3004/1803 STEP NO--UR/0482/70/000/000/0000/0000

CIRC ACCESSION NO--AA0132069

UNCLASSIFIED

APPROVED FOR RELEASE: 09/17/2001 CIA-RDP86-00513R002202220012-8"

"APPROVED FOR RELEASE: 09/17/2001 CIA-RDP86-00513R002202220012-8

UNCLASSIFIED

PROCESSING DATE--13NOV70

2/2 021

CIRC ACCESSION NO--AA0132069

ABSTRACT/EXTRACT--(U) GP-0- ABSTRACT. TO INCREASE MOISTURE RESISTANCE AND TRANSPARENCY IN THE 165-5000 MMU LONG WAVE RANGE, AS WELL AS TO DECREASE THE CRYSTN. TENDENCY AND THE M.P., YF SUB3 5-12 MOLE PERCENT WAS ADDED TO OPTICAL GLASS CONSISTING OF: BEF SUB2 49-54, AIF SUB3 10-15, CAF SUB2 LESS THAN 12, SRF SUB2 LESS THAN 9, LAF SUB3 LESS THAN 3, AND KF 12-24 MOLE PERCENT. FACILITY: LENSOVET TECHNOLOGICAL INSTITUTE, LENINGRAD.

UNCLASSIFIED

APPROVED FOR RELEASE: 09/17/2001 CIA-RDP86-00513R002202220012-8"

"APPROVED FOR RELEASE: 09/17/2001 CIA-RDP86-00513R002202220012-8

1/2 011 UNCLASSIFIED PROCESSING DATE--23OCT70

TITLE--MOISTURE RESISTANCE AND CRYSTALLIZATION OF FLUOROBERYLLATE GLASSES -U-

AUTHOR-(03)-NIKOLINA, G.P., KHALILEV, V.D., YESTROPYEV, K.S.

COUNTRY OF INFO--USSR

SOURCE--IZV. AKAD. NAUK SSSR, NEORG. MATER. 1970, 6(3), 582-4

DATE PUBLISHED--------70

SUBJECT AREAS--MATERIALS

TOPIC TAGS--CRYSTALLIZATION, FLUOROBERYLLATE GLASS, GLASS COMPOSITION, GLASS PROPERTY, FLUORIDE, MOISTURE MEASUREMENT

CONTROL MARKING--NO RESTRICTIONS

DOCUMENT CLASS--UNCLASSIFIED

PROXY REEL/FRAME--1997/0631 STEP NO--UR/0363/70/006/003/0582/0584

CIRC ACCESSION NO--AP0119543

UNCLASSIFIED

APPROVED FOR RELEASE: 09/17/2001 CIA-RDP86-00513R002202220012-8"

"APPROVED FOR RELEASE: 09/17/2001 CIA-RDP86-00513R002202220012-8

2/2 011 UNCLASSIFIED PROCESSING DATE--23OCT70

CIRC ACCESSION NO--AP0119543

ABSTRACT/EXTRACT--(U) GP-0- ABSTRACT. THE EFFECT OF MUTUAL EXCHANGES OF FLUORIDES OF BE, K, AL, AND ALKALI EARTH ELEMENTS ON THE STABILITY TO CRYSTN. AND ON HYDROLYTIC STABILITY OF FLUOROBERYLLATE GALSSES CONTG. 54-49 MOLE PERCENT BEF SUB2 WAS STUDIED. THE SAMPLES WERE PREPD. BY CONVENTIONAL METHODS, AND SEVERAL SERIES OF THE EXPTS. WERE PERFORMED. THE SUBSTITUTION OF KF BY MGF SUB2 OR SRF SUB2 SIGNIFICANTLY INCREASES THE MOISTURE RESISTANCE OF THE INITIAL GLASS, BUT DECREASES ITS STABILITY TO CRYSTN. THE SIGNIFICANT DIFFERENCE IN THE SOLY. OF THE CRYST. CLUORIDES DOES NOT MANIFEST ITSELF IN THE SOLY. OF THE GLASSES. IN ORDER TO INCREASE THE MOISTURE RESISTANCE IT IS EXPEDIENT TO DECREASE THE CONTENT OF BEF SUB2 ANS KF IN THE GLASS. GLASSES BE54, BE54M, BE54MB, BE48L4, AND B4 WERE STUDIED. ON THE INTRODUCTION INTO THE GLASS OF YF SUB3 AND LAF SUB3, THE MOISTUE RESISTANCE INCREASES. HOWEVER, CRYSTN. THEREBY ALWAYS INTENSIFIES. AN ATTMEPT WAS MADE TO EXPLAIN THIS BEHAVIOR. FROM THE EXPTL. DATA OBTAINED IT IS SHOWN THAT COMPLICATING THE COMPN. OF FLUOROBERYLLATE GLASSES BASED ON THE BEF SUB2-ALF SUB3-CAF SUB2-KF SYSTEM BY THE INTRODUCTION OF FLUORIDES OF ALKALI EARTH AND OTHER CATIONS INSTEAD OF BEF SUB2 AND KF RESULTS IN OBTAINING GLASSES WITH MOISTURE RESISTANCE WHICH IS HIGHER THAN THAT OF THE LATTER HYDROLYTIC GROUP. ADDNS. OF NDF SUB3 INCREASE THE MOISTURE RESISTANCE TO A HIGHER DEGREE THAN ADDNS. OF CEF SUB3. FACILITY: LENINGRAD. TEKHNOL. INST. IM. LENSOVETA, LENINGRAD, USSR.

UNCLASSIFIED

APPROVED FOR RELEASE: 09/17/2001 CIA-RDP86-00513R002202220012-8"

"APPROVED FOR RELEASE: 09/17/2001 CIA-RDP86-00513R002202220012-8

USSR UDC 541.121

ROZEN, A. M., NIKOLOTOVA, Z. I., and KARTASHEVA, N. A.

"Regularity of the Extraction by Organic Oxides R_3XO and Bases R_4XNO_3 in the Series N-P-As"

Moscow, Doklady Akademii Nauk SSSR, Vol 209, No 6, Apr 73, pp 1369-1372

Abstract: Changing the structure of the extracting agent shows little effect on the mechanism of extraction; however, with sufficient increase of the basicity of organic oxides, qualitative changes in the mechanism of the extraction may occur. It has been shown in this study that in the acidity range 0.5 to 7 M the extractive capability by the amine mechanism of the extraction of uranium or americium decreases gradually in the series $R_3N \approx R_3NO > R_3AsO$. The extractive power of the oxides by the amine mechanism is synbatic to their basicity. Nitric acid is extracted in form of the complexes $(HNO_3)_iS$, where S is a molecule of the extract and i = 1,2,3,4. Uranyl nitrate, on the basis of spectroscopic data is extracted as a hydrated trinitrate ion. Plutonium is extracted as $[R_4N^+]_2 [Pu(NO_3)_5]^{2-}$.

1/1

APPROVED FOR RELEASE: 09/17/2001 CIA-RDP86-00513R002202220012-8"

"APPROVED FOR RELEASE: 09/17/2001 CIA-RDP86-00513R002202220012-8

USSR

UDC 542.61:541.6

ROZEN, A. M., NIKOLOTOVA, Z. I., KARTASHEVA, N. A., ZARUBIN, A. I., and TETERIN, E. G.

"The Relationship Between the Extraction Power of Neutral Phosphorusorganic Compounds and Their Structure. III. The Effect of Anions. Extraction of Uranyl Chloride"

Leningrad, Radiokhimiya, Vol 13, No 5, 1971, pp 700-704

Abstract: Extraction of uranyl chloride was studied in a series of neutral phosphorusorganic compounds from tributylphosphate (TBP) to trioctylphosphine oxide (TOPO) in the temperature range 0-70°C. It was determined that effective extraction constants are about 600 fold lower than those of uranyl nitrate. This may be due to the fact that higher hydration of chloride ions results in stronger forces keeping the uranyl chloride in aqueous phase; also the chloride ion is bound much tighter to the uranium than nitrate ion. A linear relationship was found between the logarithm of extraction constants and structural characteristics of the extracting agents: total electronegativity, Taft constants, Kabachnik constants, IR frequency, etc. Heat effects of the extraction were measured and calculated from the temperature function of concentration constants. The calculated effects do not correlate with

1/2

APPROVED FOR RELEASE: 09/17/2001 CIA-RDP86-00513R002202220012-8"

"APPROVED FOR RELEASE: 09/17/2001 CIA-RDP86-00513R002202220012-8

USSR

ROZEN, A. M., et al., Radiokhimiya, Vol 13, No 5, 1971, pp 700-704

structural characteristics and differ considerably from the directly measured values. Concentration constants in this case are not suitable for the calculation of heat effect.

2/2

APPROVED FOR RELEASE: 09/17/2001 CIA-RDP86-00513R002202220012-8"

"APPROVED FOR RELEASE: 09/17/2001 CIA-RDP86-00513R002202220012-8

1/2 021 UNCLASSIFIED PROCESSING DATE--04DEC70

TITLE--USE OF THE NUCLEAR MAGNETIC RESONANCE OF PHOSPHORUS TO STUDY EXTRACTION BY ORGANOPHOSPHORUS COMPOUNDS. I. EFFECT OF SOLVATION -U-

AUTHOR-(05)-ROZEN, A.M., BORODIN, P.M., NIKOLOTOVA, Z.I., CHIZHIK, V.I., SVENTITSKIY, YE.N.

COUNTRY OF INFO--USSR

SOURCE--RADIOKHIMIYA 1970, 12(1), 69-76

DATE PUBLISHED--------70

SUBJECT AREAS--CHEMISTRY, NUCLEAR SCIENCE AND TECHNOLOGY

TOPIC TAGS--PHOSPHORUS ISOTOPE, ORGANIC PHOSPHATE, URANIUM COMPOUND, NUCLEAR MAGNETIC RESONANCE, SPIN LATTICE RELAXATION, SOLVENT EXTRACTION, SOLVENT ACTION

CONTROL MARKING--NO RESTRICTIONS

DOCUMENT CLASS--UNCLASSIFIED

PROXY REEL/FRAME--3006/1464 STEP NO--UR/0186/70/012/001/0069/0076

CIRC ACCESSION NO--AP0135135

UNCLASSIFIED

APPROVED FOR RELEASE: 09/17/2001 CIA-RDP86-00513R002202220012-8"

"APPROVED FOR RELEASE: 09/17/2001 CIA-RDP86-00513R002202220012-8

2/2 021 UNCLASSIFIED PROCESSING DATE--04DEC70

CIRC ACCESSION NO--AP0135135

ABSTRACT/EXTRACT--(U) GP-0- ABSTRACT. THE PRIME31 P CHEM. SHIFT DELTA OF BU SUB3 PO SUB4 (TBP), CH SUB3(C SUB5 H SUB11 O)SUB2 PO (DAMP) AND A TRIOCTYLPHOSPHINE OXIDE (TOPO) SOLN. IN CCL SUB4 ARE PLUS 6.3, MINUS 23.3, AND MINUS 38.0 PPM, RESP.; THE PRIME31 P CHEM. SHIFTS OF SOLVATES (DELTA SUB0) PREPD. BY SATN. OF THE ABOVE EXTRACTANTS WITH UO SUB2(NO SUB3)SUB2 ARE PLUS 4.3, MINUS 32.1, AND MINUS 63.8 PPM, RESP. THE SOLVATION SHIFT (DELTA DELTA EQUALS DELTA DELTA SUB0)WAS A LINEAR FUNCTIONOF THE NO. OF ESTER GROUPS (RO), AND THE LOG. OF THE EXTN. CONST. (LOG K) INCREASED LINEARLY WITH INCREASING DELTA DELTA, I.E. DELTA DELTA COULD BE USED AS A MEASURE OF THE EXTG. POWER OF ORG. P COMPDS. THE CHEM. SHIFTS ASSOCD. WITH THE DILN. OF THE ABOVE EXTRACTANTS (AND SOLVATES) WITH DECANE, CCL SUB4, BENZENE AND CHCL SUB3 DID NOT EXCEED 1-3 PPM. THE SPIN LATTICE RELAXATION TIMES (T SUB1) OF PRIME31 P IN TBP, DAMP, THE TBP SOLVATE AND THE DAMP SOLVATE WERE 5.8, 5.3 0.85, AND 0.33 SEC, RESP.; DILN. OF THESE EXTRACTANTS (OR SOLVATES) WITH CCL SUB4 AND CHCL SUB3 INCREASED THE T SUB1, INDICATING THE OCCURRENCE OF INTERACTION ON THE DILN.

UNCLASSIFIED

APPROVED FOR RELEASE: 09/17/2001 CIA-RDP86-00513R002202220012-8"

"APPROVED FOR RELEASE: 09/17/2001 CIA-RDP86-00513R002202220012-8

1/2 017 UNCLASSIFIED PROCESSING DATE--20NOV70

TITLE--EFFECT OF MOLECULAR STRUCTURE ON THE ADSORPTION AND ELECTROOXIDATION OF ALIPHATIC ALCOHOLS -U-

AUTHOR-(05)-VASILYEV, YU.B., YANCHUK, B., NIKOLOV, I., BESKOROVAINAYA, S.S., BAGOTSKIY, V.S.

COUNTRY OF INFO--USSR

SOURCE--ELEKTROKHIMIYA 1970, 6(4), 597-601

DATE PUBLISHED--------70

SUBJECT AREAS--CHEMISTRY

TOPIC TAGS--ADSORPTION, ALIPHATIC ALCOHOL, MOLECULAR STRUCTURE, DEHYDRATION, ELECTROCHEMICAL EFFECT, OXIDATION

CONTROL MARKING--NO RESTRICTIONS

DOCUMENT CLASS--UNCLASSIFIED

PROXY REEL/FRAME--3006/1293 STEP NO--UR/0364/70/006/004/0597/0601

CIRC ACCESSION NO--AP0134967

UNCLASSIFIED

APPROVED FOR RELEASE: 09/17/2001 CIA-RDP86-00513R002202220012-8"

"APPROVED FOR RELEASE: 09/17/2001 CIA-RDP86-00513R002202220012-8

2/2 017 UNCLASSIFIED PROCESSING DATE--20NOV70

CIRC ACCESSION NO--AP0134957

ABSTRACT/EXTRACT--(U) GP-0- ABSTRACT. ME TO HEXYL ALIPHATIC ALCS. WERE STUDIED. THE ADSORPTION OF THESE ALCS. ON SMOOTH PT AT LOW TEMP. (25DEGREES) IS RELATED TO A LOSS OF 2 H ATOMS LOCATED NEAR THE ALPHA,C. BRANCHING OF THE MOLS. OR THE PRESENCE OF CONSTUTENTS AT THE ALPHA,C LOWERS THE ADSORPTION. THE ADSORPTION AT LOWER TEMPS. RESULTS FROM DEHYDROGENATION AT THE ALPHA,C, THAT AT 50-80DEGREES FROM DEHYDROGENATION OF THE RADICALS OF THE MOL., AND THAT AT 90-100DEGREES BY VIRTUE OF C C BOND BREAKING. THE POLARIZATION CURVES OF ELECTROOXION. OF THE ALCS. SHOW THAT THE MAX. UNSTEADY STATE CURRENT IN ALL CASES CHANGED WITH THE ELECTRODE COVERAGE. GENERALLY, AS THE CHAIN OF THE ALC. LENGTHENED, THE RATE OF DEHYDROGENATION AS WELL AS THE RATE OF ELECTROOXION. DECLINED. FACILITY: INST. ELEKTROKHIM., MOSCOW, USSR.

UNCLASSIFIED

APPROVED FOR RELEASE: 09/17/2001 CIA-RDP86-00513R002202220012-8"

"APPROVED FOR RELEASE: 09/17/2001 CIA-RDP86-00513R002202220012-8

Acc. Nr: AP0047115 Ref. Code: UR0504

PRIMARY SOURCE: Terapevticheskiy Arkhiv, 1970, Vol 42, Nr 1, pp 58-61

HISTOLOGICAL, ENZYMATIC AND ELECTRON MICROSCOPIC CHANGES IN THE MUCOSA OF THE STOMACH AND SMALL INTESTINE IN PATIENTS WITH CHRONIC HEPATITIS AND LIVER CIRRHOSIS

N. P. Nikolov, A. G. Boyadzhiyeva, D. D. Doychinov

Summary

A total of 73 patients with chronic hepatitis and liver cirrhosis were examined. Besides histological study of biopsy material, in 16 patients the authors determined phosphatase, and in 10 — electron microscopic investigation was conducted. Normal and almost normal gastric mucosa was found in 36.8% of the patients, superficial gastritis in 33.4%, initial atrophic gastritis in 13% and protracted atrophic gastritis in 16.6%. The principal and parietal cells were in the condition of high activity, as much expressed as renal decompensation. Normal mucosa of the small intestine was established in 42% of the cases, partial atrophy in 40.9% and subtotal atrophy in 17.1%. Electron microscopic resorbtive cells in cases with subtotal atrophy did not differ from those in sprue. There was established a relation between the degree of steatorrhea and changes of the small intestine.

REEL/FRAME
19790607

APPROVED FOR RELEASE: 09/17/2001 CIA-RDP86-00513R002202220012-8"

"APPROVED FOR RELEASE: 09/17/2001 CIA-RDP86-00513R002202220012-8

USSR UDC 538.113

KOMAR'M I. N., NIKOLOV, O. T., and MAYER, I.

"On the Structure and Stability of Free Radicals Produced in γ -Irradiated Glycine"

Kiev, Teoreticheskaya i Eksperimental'naya Khimiya, No 4, Jul/Aug 70, pp 561-566

Abstract: The article deals with post-radiation processes in gamma-irradiated glycine. Polycrystalline and monocrystalline specimens of α-glycine were studied. A Co^{60} source with a dose rate of 3000 roentgens per minute was used. The total dose was 10^5-10^7 roentgens. Post-radiation heating of the irradiated specimens showed that three types of free radicals are formed under normal conditions: CH_2COO^-, $^+NH_3CH\ COO^-$ and NH_2CHOO^-. Specimens freshly irradiated at room temperature contain about 38, 58 and 4% of these free radicals, respectively. The last free radical is the most stable, while the first is the least stable. With irradiation doses of about 10^5 roentgens, recombination of all three free radicals is described by first order processes. Electron paramagnetic resonance spectra of polycrystalline and monocrystalline specimens of normal α -glycine irradiated at room temperature are identified.

1/1

APPROVED FOR RELEASE: 09/17/2001 CIA-RDP86-00513R002202220012-8"

"APPROVED FOR RELEASE: 09/17/2001 CIA-RDP86-00513R002202220012-8

UDC 615.917

USSR

~~NIKOLOV, S. KH.~~, LYUBETSKIY, KH. Z., BARSEL'YANTS, G. B., ZABELIN, A. A., NEFELOV, P. V., ONOPCHENKO, N. V., CHURSINA, M. A., YEREMIN, V. M., TRENSUK, R. A.

"Toxicologic Estimate of the New Organophosphorus Pesticide Bitex"

V sb. Vliyanive ul'trazvuka, yadokhimik. i drugikh faktorov sredy na organizm cheloveka i pishch. produkty (Effect of Ultrasound, Poisons and other Factors of the Environment on the Organism of Man and Food Products -- collection of works), Krasnodar, 1971, pp 85-91 (from RZh-Farmakologiya. Khimioterapevticheskiye sredstva. Toksikologiya, No 2, Feb 72, Abstract No 2.54.773)

Translation: Rats were injected intraventricularly with bitex (an organophosphorus pesticide; I: contains 50% active principle) dissolved in water (1 mℓ) in doses of 100, 200, 300, 400, 500, 600, 700 and 800 mg/kg, and they were observed for 3 weeks. With a dose of 100-200 mg/kg, the activity of the cholinesterase dropped by 2-3 times during the first 1-2 days, and it began to recover after 7-11 days. The dose of 100 mg/kg was taken as the minimum toxic dose. For doses of 300 mg/kg and higher, sluggishness, increased frequency of urination, diarrhea, contraction of the pupils, tears, paresis of the extremities, a drop in body temperature of 1-5°, an increase in the sedimentation rate, leucocytosis, neutrophilesis and a reduction in the cholinesterase activity by 3-15 times were noted. The DL_{100} of I is 800 mg/kg, the DL_{50} is 384.6

1/2

APPROVED FOR RELEASE: 09/17/2001 CIA-RDP86-00513R002202220012-8"

"APPROVED FOR RELEASE: 09/17/2001 CIA-RDP86-00513R002202220012-8

USSR

NIKOLOV, S. KH., et al., Vliyaniye ul'trazvuka, yadokhimik. i drugikh faktorov sredy na organizm cheloveka i pishch. produkty, Krasnodar, 1971, pp 85-91

(491.8-277.4 mg/kg). For rabbits (I was injected in doses of 25-200 mg/kg) the DL_{50} was calculated on the level of 82 (11.67-47.3) mg/kg. The pathomorphological changes in rabbits were characterized by circulatory disorders and distrophy. USSR. Krasnodar, Medical Instiute.

2/2

APPROVED FOR RELEASE: 09/17/2001 CIA-RDP86-00513R002202220012-8"

"APPROVED FOR RELEASE: 09/17/2001 CIA-RDP86-00513R002202220012-8

USSR UDC 616.988.73-022.39:598.4

KAMENOV, Ye. K., NIKOLOV, Z. V., NEDELCHEVA, S. B., MATEVA-STOYEVA, Yel. V., NEDELCHEVA, N. P., PASKALEVA, M. G., DENCHEV, St. I., and TURLAKOV, I. G., Chair of Epidemiology, Institute for Specialization and Advanced Training of Physicians, Republic Antiepidemic Station, and Zoological Institute and Museum of the Bulgarian Academy of Sciences, Sofia, Bulgaria

"Aquatic and Swamp Birds -- Carriers of Agents of Infectious Diseases. Communication I: Ornithosis"

Moscow, Voprosy Virusologii, No 4, Jul/Aug 71, pp 437-441

Abstract: Since Bulgaria lies along one important flight route of migrant aquatic and swamp fowl, a serological investigation was performed on 350 wild birds caught along Bulgaria's Black Sea shore and Danube River. Specific antibodies against ornithosis were found in specimens belonging to the orders Ardiiformes, Podicipidiformes, Lariformes, Ralliformes, and Charadriiformes. In some areas densely populated by wild ducks, antibodies against ornithosis virus were found in 21.8% of wild ducks, in 44.7% of domestic ducks on neighboring farms, and in 54.5% of people. These findings support the previously advanced hypothesis that migrating aquatic and swamp birds play an important role in the epidemiology ornithosis in natural foci and in the transmission of this disease to domestic fowl and to humans.

1/1

APPROVED FOR RELEASE: 09/17/2001 CIA-RDP86-00513R002202220012-8"

"APPROVED FOR RELEASE: 09/17/2001 CIA-RDP86-00513R002202220012-8

USSR UDC 616.988.75-036.2(47+497.2)

ZAKSTEL'SKAYA, L. YA., NIKOLOVA, Z., ANTONOVA, I. V., KEBEDZHIYEV, G., YEVSTIGNEYEVA, N. A., and SHENDEROVICH, S. F., Institute of Virology imeni D. I. Ivanovskiy, Academy of Medical Sciences USSR, Moscow, and Scientific Research Institute of Epidemiology and Microbiology, Sofia

"A Comparative Study of the 1969 Influenza Epidemic in the Soviet Union and in the People's Republic of Bulgaria"

Moscow, Voprosy Virusologii, No 6, Nov/Dec 71, pp 656-661

Abstract: The influenza epidemics which lasted from December 1968 to April 1969 in the USSR, afflicting 12.4% of the population, and from February to April 1969 in Bulgaria, afflicting 5.9% of the population, had several common characteristics: both were of foreign origin (brought in by travellers), both developed more gradually but lasted longer than previous epidemics, and the severity of the diseases was mild to moderate, so that no special disruptions occurred either in business or in schools. Over 2,000 strains of virus A2 were isolated in the USSR, or which 439 were investigated, while 226 strains of the same virus were isolated and investigated in Bulgaria. All these strains formed a homogeneous antigenic froup, with variant A2 (Hong Kong)68 predominating. Virological, serological, and immunofluorescent tests revealed that this variant differed considerably from the

1/2

APPROVED FOR RELEASE: 09/17/2001 CIA-RDP86-00513R002202220012-8"

"APPROVED FOR RELEASE: 09/17/2001 CIA-RDP86-00513R002202220012-8

ZAKSTEL'SKAYA, L. YA., et al., Voprosy Virusologii, No 6, Nov/Dec 71, pp 656-661

parent strain A2(Singapore)57 and from the subtype A2 which proliferated in 1964-1967 but was practically identical with the subtype A2/3.

2/2

APPROVED FOR RELEASE: 09/17/2001 CIA-RDP86-00513R002202220012-8"

"APPROVED FOR RELEASE: 09/17/2001 CIA-RDP86-00513R002202220012-8

1/2 008 UNCLASSIFIED PROCESSING DATE--18SEP70

TITLE--VIRULENCE OF RICKETTSIA PROWAZEKII STRAIN E INCREASED AFTER PASSAGES ON GUINEA PIGS. REPORT II -U-

AUTHOR-(02)-BALAYEVA, N.M., NIKOLSKAY, V.N.

N

COUNTRY OF INFO--USSR

SOURCE--VESTNIK ADADEMII MEDITSINSKIKH NAUK SSSR, VOL 25, NR 2, 1970, PP 17-22

DATE PUBLISHED--------70

SUBJECT AREAS--BIOLOGICAL AND MEDICAL SCIENCES

TOPIC TAGS--RICKETTSIA PROWAZEKI, GUINEA PIG

CONTROL MARKING--NO RESTRICTIONS

DOCUMENT CLASS--UNCLASSIFIED

PROXY REEL/FRAME--1986/1847 STEP NO--UR/0248/70/025/002/0017/0022

CIRC ACCESSION NO--AP0103595

UNCLASSIFIED

APPROVED FOR RELEASE: 09/17/2001 CIA-RDP86-00513R002202220012-8"

"APPROVED FOR RELEASE: 09/17/2001 CIA-RDP86-00513R002202220012-8

2/2 008 UNCLASSIFIED PROCESSING DATE--18SEP70

CIRC ACCESSION NO--AP0103595

ABSTRACT/EXTRACT--(U) GP-0- ABSTRACT. 1. PASSAGE OF STRAIN E RICKETTSIA PROWAZEKII ON GUINEA PIGS LEADS TO AN INCREASE IN THE VIRULENCE OF THIS STRAIN. 2. IT IS POSSIBLE TO ISOLATE A RICKETTSIAL STRAIN WITH INCREASED VIRULENCE IN THE FIRST PASSAGE FROM GUINEA PIG ORGANS LONG AFTER INFECTION (13TH DAY). 3. A RICKETTSIAL STRAIN WITH INCREASED VIRULENCE WAS ISOLATED IN THE SECOND PASSAGE, USING MATERIAL FROM THE GUINEA PIG'S TUNICA VAGINALIS TESTIS FROM THE FIRST PASSAGE EXTRACTED SOON AFTER INFECTION (72 HOURS) AS THE PASSAGE MATERIAL.

UNCLASSIFIED

APPROVED FOR RELEASE: 09/17/2001 CIA-RDP86-00513R002202220012-8"

"APPROVED FOR RELEASE: 09/17/2001 CIA-RDP86-00513R002202220012-8

1/2 022 UNCLASSIFIED PROCESSING DATE--30OCT70

TITLE--DIACETYLENE DERIVATIVES. 17. SPECTRAL STUDY OF THE MULTIPLE EFFECT OF HETEROATOMS AND MULTIPLE BONDS IN ENYNE SYSTEMS -U-

AUTHOR-(04)-SHERGINA, N.I., GOLOVANOVA, N.I., NIKOLSKAYA, A.N., VOLKOV, A.N.

COUNTRY OF INFO--USSR

SOURCE--IZV. AKAD. NAUK SSSR, SER. KHIM. 1970, (3), 546-9

DATE PUBLISHED--------70

SUBJECT AREAS--CHEMISTRY

TOPIC TAGS--ACETYLENE HYDROCARBON, IR SPECTRUM, UV SPECTRUM, CONJUGATE BOND SYSTEM, CYCLIC GROUP

CONTROL MARKING--NO RESTRICTIONS

DOCUMENT CLASS--UNCLASSIFIED

PROXY REEL/FRAME--2000/0740 STEP NO--UR/0062/70/000/003/0546/0549

CIRC ACCESSION NO--AP0124410

UNCLASSIFIED

APPROVED FOR RELEASE: 09/17/2001 CIA-RDP86-00513R002202220012-8"

"APPROVED FOR RELEASE: 09/17/2001 CIA-RDP86-00513R002202220012-8

UNCLASSIFIED PROCESSING DATE--30OCT7

2/2 022

CIRC ACCESSION NO--AP0124410

ABSTRACT/EXTRACT--(U) GP-0- FOR. SHOWN ON MICROFICHE. THESE COMPDS. IS REFLECTED ELECTRONIC CONJUGATION AND IRKUTSK. INST. ORG. KHIM.,

ABSTRACT. IR AND UV SPECTRA WERE REPORTED GENERALLY THE NATURE OF THE HETERO ATOM IN IN THE ETHYLENE BANDS, INVOLVING BOTH THE INDUCTIVE EFFECT. FACILITY: IRKUTSK, USSR.

UNCLASSIFIED

APPROVED FOR RELEASE: 09/17/2001 CIA-RDP86-00513R002202220012-8"

"APPROVED FOR RELEASE: 09/17/2001 CIA-RDP86-00513R002202220012-8

1/2 020 UNCLASSIFIED PROCESSING DATE--18SEP70

TITLE--INTERACTION IN THE SILVER, THALLIUM AND TELLURIUM SYSTEM STUDIED FROM THE THALLIUM TELLURIDE AND SILVER TELLURIDE SECTION -U-

AUTHOR-(04)-KOVALEVA, I.S., KRANCHEVICH, K.S., SEMENTSOVA, R.S., NIKOLSKAYA, G.F.

COUNTRY OF INFO--USSR

N

SOURCE--IZV. AKAD. NAUK SSSR, NEORG. MATER. 1970, 6(2), 247-51

DATE PUBLISHED--------70

SUBJECT AREAS--CHEMISTRY

TOPIC TAGS--PHASE DIAGRAM, SILVER, THALLIUM, TELLURIUM, HARDNESS, X RAY ANALYSIS

CONTROL MARKING--NO RESTRICTIONS

DOCUMENT CLASS--UNCLASSIFIED

PROXY REEL/FRAME--1988/0558 STEP NO--UR/0363/70/006/002/0247/0251

CIRC ACCESSION NO--AP0105543

UNCLASSIFIED

APPROVED FOR RELEASE: 09/17/2001 CIA-RDP86-00513R002202220012-8"

"APPROVED FOR RELEASE: 09/17/2001 CIA-RDP86-00513R002202220012-8

2/2 020 UNCLASSIFIED PROCESSING DATE--18SEP70

CIRC ACCESSION NO--AP0105543

ABSTRACT/EXTRACT--(U) GP-0- ABSTRACT. THE PHASE DIAGRAM OF THE TL SUB2 TE SUB3 MINUS AG SUB2 TE SECTION WAS PLOTTED FROM THE RESULTS OF DTA, MICROSTRUCTURAL, X RAY PHASE, AND MICROHARDNESS DATA OF COMPNS. OF THE TERNARY AG-TL-TE SYSTEM. THE SECTION STUDIED IS NOT QUASIBINARY.

UNCLASSIFIED

APPROVED FOR RELEASE: 09/17/2001 CIA-RDP86-00513R002202220012-8"

"APPROVED FOR RELEASE: 09/17/2001 CIA-RDP86-00513R002202220012-8

USSR

UDC 615.849.19.015:612.845.1-086.3

KRASNOV, M. M., SAPRYKIN, P. I., DORONIN, P. P., NIKOL'SKAYA, G. M., AKOPYAN, V. S., and MAMEDOV, N. G.

"Electron-Microscopic Study of Tissues of the Eye Fundus Following Laser Coagulation"

Moscow, Vestnik Oftal'mologii, No 2, 1973, pp 9-12

Abstract: The changes produced in the tissue of the eye fundus following exposure to therapeutic doses of laser radiation were studied in experiments on pigmented rabbits of the chinchilla breed with the purpose of obtaining data pertaining to the optimum conditions of applying laser radiation for photocoagulation of the retina in the therapy of retinal detachment. Radiation in the energy range of 0.02-0.05 J ± 8% (energy densities of 5.5-17.0 J/sq. cm.) emitted by a ruby laser was applied. The irradiated eye tissues were subjected to microscopic and electron-microscopic study on sacrificing the animals within periods of 10 min-3 wks after photocoagulation. The damage was apparently limited to the external layers of the retina and the pigmented epithelium and deeper layers were affected only slightly. Two types of damage to the retina and to the pigmented epithelium were observed, one due to mechanical effects of an explosive nature and another due to thermal coagulation effects. Within 2-3 wks the part of the photoreceptor apparatus at the site of the injury

APPROVED FOR RELEASE: 09/17/2001 CIA-RDP86-00513R002202220012-8"

"APPROVED FOR RELEASE: 09/17/2001 CIA-RDP86-00513R002202220012-8

USSR

KRASNOV, M. M., et al., Vestnik Oftal'mologii, No 2, 1973, pp 9-12

produced by the radiation was substantially restored to a state in which it apparently was capable of functioning. The sclera was not affected. The study that had been conducted indicated that in the search for optimum conditions of laser irradiation one must attempt to reduce as far as possible mechanical effects and restrict the thermal effects to the layer of pigmented epithelium.

2/2

APPROVED FOR RELEASE: 09/17/2001 CIA-RDP86-00513R002202220012-8"

"APPROVED FOR RELEASE: 09/17/2001 CIA-RDP86-00513R002202220012-8

1/2 024 UNCLASSIFIED PROCESSING DATE--30OCT70

TITLE--INVESTIGATION OF INTERFERON INDUCTION IN ANIMALS BY MEANS OF DIFFERENT STIMULATORS -U-

AUTHOR-(05)-OGANESYAN, R.KH., FADEYEVA, L.L., TIKHONENKO, T.I., NIKOLSKAYA, I.I., PARFANOVICH, M.I.

COUNTRY OF INFO--USSR

N

SOURCE--VOPROSY VIRUSOLOGII, 1970, NR 3, PP 287-291

DATE PUBLISHED--------70

SUBJECT AREAS--BIOLOGICAL AND MEDICAL SCIENCES

TOPIC TAGS--INTERFERON, MEASLES, GAMMA GLOBULIN, HEPATITIS, MOUSE, RNA

CONTROL MARKING--NO RESTRICTIONS

DOCUMENT CLASS--UNCLASSIFIED

PROXY REEL/FRAME--2000/1853 STEP NO--UR/0402/70/000/003/0287/0291

CIRC ACCESSION NO--AP0125464

UNCLASSIFIED

APPROVED FOR RELEASE: 09/17/2001 CIA-RDP86-00513R002202220012-8"

"APPROVED FOR RELEASE: 09/17/2001 CIA-RDP86-00513R002202220012-8

2/2 024 UNCLASSIFIED PROCESSING DATE--30OCT70

CIRC ACCESSION NO--AP0125464

ABSTRACT/EXTRACT--(U) GP-0- ABSTRACT. THE PAPER PRESENTS THE RESULTS OF TESTS OF DIFFERENT PREPARATIONS AS INTERFERON STIMULATORS IN MICE. SYNTHETIC DOUBLE STRANDED COMPLEX OF POLYADENYLIC AND POLYURIDILIC ACIDS (POLY-AU), DOUBLE STRANDED REPLICATIVE FORM OF RNA OF MEASLES VIRUS, GAMMA GLOBULINS OF HUMAN AND HORSE ORIGIN WERE FOUND TO BE ACTIVE INDUCERS ON INTERFERON IN MICE. THE PREPARATIONS UNDER STUDY WERE NOT TOXIC FOR THE ANIMALS. THESE INTERFERON INDUCERS SHOWED ANTIVIRAL ACTIVITY IN MICE AGAINST VIRUS OF MURINE HEPATITIS PROVIDED THE PREPARATION WAS INOCULATED BEFORE THE INFECTION. FACILITY: INSTITUT VIRUSOLOGII IMENI D. I. IVANOVSKOGO AMN SSSR, MOSKVA.

UNCLASSIFIED

APPROVED FOR RELEASE: 09/17/2001 CIA-RDP86-00513R002202220012-8"

"APPROVED FOR RELEASE: 09/17/2001 CIA-RDP86-00513R002202220012-8

1/2 017 UNCLASSIFIED PROCESSING DATE--20NOV70

TITLE--SPECTROPHOTOMETRIC STUDY OF COMPLEXING IN AN IRON,III,NITRATE,NITRIC ACID,WATER SYSTEM -U-

AUTHOR-(05)-KLYGIN, A.YE., SMIRNOVA, I.D., NIKOLSKAYA, N.A., KOLYADA, N.S., LEKAYE, V.A.

COUNTRY OF INFO--USSR

SOURCE--ZH. NEORG. KHIM. 1970, 15(3), 753-6

DATE PUBLISHED--------70

SUBJECT AREAS--CHEMISTRY

TOPIC TAGS--SPECTROPHOTOMETRIC ANALYSIS, IRON COMPLEX, NITRATE, NITRIC ACID, AQUEOUS SOLUTION

CONTROL MARKING--NO RESTRICTIONS

DOCUMENT CLASS--UNCLASSIFIED

PROXY REEL/FRAME--3004/2028 STEP NO--UR/0078/70/015/003/0753/0756

CIRC ACCESSION NO--AP0132285

UNCLASSIFIED

APPROVED FOR RELEASE: 09/17/2001 CIA-RDP86-00513R002202220012-8"

"APPROVED FOR RELEASE: 09/17/2001 CIA-RDP86-00513R002202220012-8

2/2 017 UNCLASSIFIED PROCESSING DATE--20NOV70

CIRC ACCESSION NO--AP0132285

ABSTRACT/EXTRACT--(U) GP-0- ABSTRACT. PRESENCE OF FE PRIME3 POSITIVE, FE(NO SUB3) SUB3 .HNO SUB3 (I), AND FE(NO SUB3) SUB3 .3HNO SUB3 (II) IN FE(NO SUB3) SUB3 HNO SUB3 H SUB2 O SYSTEM WAS CONFIRMED SPECTROPHOTOMETRICALLY. MOLAR ABSORPTION COEFFS. OF I AND II AT 390, 400, AND 410 M MU ARE GIVEN. CONSTS. OF I AND II FORMATION ARE IN THE REGION OF 10 PRIME NEGATIVE2 AND 10 PRIME NEGATIVE3, RESP.

UNCLASSIFIED

APPROVED FOR RELEASE: 09/17/2001 CIA-RDP86-00513R002202220012-8"

"APPROVED FOR RELEASE: 09/17/2001 CIA-RDP86-00513R002202220012-8

1/2 018 UNCLASSIFIED PROCESSING DATE--13NOV70

TITLE--CHROMATOGRAPHIC STUDY OF FATTY ACIDS OF THE BLOOD SERUM DURING CIRCULATORY INSUFFICIENCY -U-

AUTHOR-(02)-TIKHONOV, V.P., NIKOLSKAYA, O.N.

COUNTRY OF INFO--USSR

SOURCE--KARDIOLOGIYA 10(1): 115-119, ILLUS. 1970

DATE PUBLISHED--------70

SUBJECT AREAS--BIOLOGICAL AND MEDICAL SCIENCES

TOPIC TAGS--BLOOD CIRCULATION, BLOOD SERUM, HEART DISEASE, FATTY ACID, ATHEROSCLEROSIS

CONTROL MARKING--NO RESTRICTIONS

DOCUMENT CLASS--UNCLASSIFIED

PROXY REEL/FRAME--3004/0541 STEP NO--UR/0495/70/010/001/0115/0119

CIRC ACCESSION NO--AP0131164

UNCLASSIFIED

APPROVED FOR RELEASE: 09/17/2001 CIA-RDP86-00513R002202220012-8"

"APPROVED FOR RELEASE: 09/17/2001 CIA-RDP86-00513R002202220012-8

2/2 018 UNCLASSIFIED PROCESSING DATE--13NOV70

CIRC ACCESSION NO--AP0131164

ABSTRACT/EXTRACT--(U) GP-0- ABSTRACT. IN 110 PATIENTS WITH RHEUMATIC FEVER AND ATHEROSCLEROSIS THE BLOOD SERUM FATTY ACIDS WERE DETERMINED IN ORDER TO STUDY THE INFLUENCE OF HEART FAILURE ON THEIR CONTENT. IN ATHEROSCLEROSIS THERE WAS A SHARP INCREASE IN THE CONTENT OF SATURATED FATTY ACIDS. IN RHEUMATIC FEVER THE LEVEL OF SATURATED FATTY ACIDS INCREASED INSIGNIFICANTLY, MAINLY AT THE EXPENSE OF MYRISTIC ACID. DEVELOPING CARDIAC INSUFFICIENCY CAUSED A STATISTICALLY SIGNIFICANT REDUCTION OF THE CONTENT OF NONSATURATED FATTY ACIDS IN BOTH GROUPS OF PATIENTS. PARTICULARLY SHARP WAS THE DECREASE OF OLIC ACID, RARELY LINOLENIC ACID. THE QUANTITY OF SATURATED FATTY ACIDS IN CIRCULATORY INSUFFICIENCY OF II-B-III STAGES ALSO MODERATELY DECREASED IN COMPARISON WITH THE CONTENT IN PATIENTS WITHOUT MARKED CIRCULATORY INSUFFICIENCY. THE CONTENT OF PALMITIC ACID OFTEN DECREASED. SUCH AN ALTERATION IN THE COMPOSITION OF BLOOD SERUM FATTY AICDS IS UNFAVORABLE FOR THE NORMAL ENERGETIC AND PLASTIC REQUIREMENTS OF THE MYOCARDIUM. FACILITY: DEP. THER., VOLGOGRAD MED. INST., VOLGOGRAD, USSR.

UNCLASSIFIED

APPROVED FOR RELEASE: 09/17/2001 CIA-RDP86-00513R002202220012-8"

"APPROVED FOR RELEASE: 09/17/2001 CIA-RDP86-00513R002202220012-8

1/2 025 UNCLASSIFIED PROCESSING DATE--27NOV70

TITLE--MOLECULAR ORGANIZATION OF THE TAIL CORE OF T2 BACTERIOPHAGE -U-

AUTHOR-(03)-KOSOUROV, G.I., POGLAZOV, B.F., NIKOLSKAYA, T.I.

COUNTRY OF INFO--USSR

SOURCE--BIOKHIMIYA 1970, 35(2), 419-21

DATE PUBLISHED-------70

SUBJECT AREAS--BIOLOGICAL AND MEDICAL SCIENCES

TOPIC TAGS--BACTERIOPHAGE, ELECTRON MICROSCOPY, ELECTRON DIFFRACTION ANALYSIS, ELECTROPHORESIS, MOLECULAR STRUCTURE

CONTROL MARKING--NO RESTRICTIONS

DOCUMENT CLASS--UNCLASSIFIED

PROXY REEL/FRAME--3006/0443 STEP NO--UR/0218/70/035/002/0419/0421

CIRC ACCESSION NO--AP0134216

UNCLASSIFIED

APPROVED FOR RELEASE: 09/17/2001 CIA-RDP86-00513R002202220012-8"

"APPROVED FOR RELEASE: 09/17/2001 CIA-RDP86-00513R002202220012-8

UNCLASSIFIED PROCESSING DATE--27NOV70

2/2 025

CIRC ACCESSION NO--AP0134216

ABSTRACT/EXTRACT--(U) GP-0- ABSTRACT. ELECTRON MICROSCOPIC AND DIFFRACTION STUDIES OF PHAGE T2 TAIL CORE SHOWED THAT THE ROD SHAPED PARTICLES ARE 800 ANGSTROM LONG AND 70 ANGSTROM IN OUTER DIAM. AND COMPOSED OF 6 SPIRALLY WOUND FIBERS. THE PITCH OF THE SPIRALS IS 185 ANGSTROM, AND THERE ARE 9 PROTEIN SUBUNITS PER TURN. THE SUBUNITS ARE SPHERICAL AND HAVE A DIAM. OF 21 ANGSTROM. ELECTROPHORESIS SHOWED THAT THERE WAS ONLY 1 TYPE OF PROTEIN. FACILITY: INST. CRYSTALLOGR., MOSCOW, USSR.

UNCLASSIFIED

APPROVED FOR RELEASE: 09/17/2001 CIA-RDP86-00513R002202220012-8"

"APPROVED FOR RELEASE: 09/17/2001 CIA-RDP86-00513R002202220012-8

NIKOL'SKAYA, V. L.

JPRS 56001
16 May 72

UDC 669.15'24'26'28:539.4.011

EMBRITTLEMENT OF MARTENSITE-AGED 00N18K9M5T STEEL BY PRECIPITATION OF TITANIUM CARBONITRIDES

[Article by L.N. Belyakov, V.L. Nikol'skaya, O.K. Rovvakina, V.V. Sachkov; Moscow, Izvestiya Akademii Nauk SSSR, Metally, Russian, No 1, 1972, signed to press 3 December 1970, pp 159-165]

Martensite-aged steels on a base of Fe - 18% Ni-Co-Mo, doped with titanium, can be embrittled by slow cooling from 1200-1250° as a result of the precipitation of Ti(C,N) lattices along the boundaries of the original austenite grain [1]. The sharp drop in plasticity and ductility is usually accompanied by transition to intercrystallite fracture. Rough lattices are detected in the structure of the large forgings and punchings of 00N18K9M5T steel along the boundaries of the austenite grains, and also drawn in the direction of the hot plastic deformation of the Ti(C,N) cluster. The forgings and punchings had a large grain of 1-2 on the scale. The relative contraction of these forgings in the transverse and height directions (in the zone of fracturing of the punchings) after quenching from 820° and aging at 480° comprises a total of 2-10%. Triple recrystallization at 925-975° [2] reduced the grain size of the steel, but did not raise the plasticity to the required values. An investigation was made on the temperature range of precipitation of the Ti(C,N) lattices in the 00N18K9M5T steel, their embrittling influence, and also the conditions of altering the structures having the lattices.

The investigation was made on steel smelted at the Electrostal' Plant in open arc furnaces with a weight up to 5 T and subsequent vacuum-arc smelting in crystallizers up to 600

APPROVED FOR RELEASE: 09/17/2001 CIA-RDP86-00513R002202220012-8"

"APPROVED FOR RELEASE: 09/17/2001 CIA-RDP86-00513R002202220012-8

Steels

USSR UDC: 669.15'24'25'28:539.4.011

BELYAKOV, L. N., NIKOL'SKAYA, V. L., REVYAKINA, O. K. and SACHKOV, V. V.,
Moscow

"Embrittlement of Precipitation-Hardening Martensitic Steel"

Moscow, Izvestiya Akademii nauk SSSR, Metally, No 1, Jan-Feb 72, pp 159-165

Abstract: This study concerns the temperature range conducive to the segregation of Ti(C, N) particles in the form of networks along the austenite grain boundaries in 000N18K9M5T steel, the embrittling effect of such networks on the steel, as well as the conditions for correcting structures having such networks. On slow cooling from 1200-1250°C the coarse-grained precipitation-hardened martensitic steel becomes brittle due to the separation of Ti(C, N) networks within the 760-1000°C range. It is shown that brittleness may be eliminated by rapid cooling in water or oil. The structure and mechanical properties of steels with networks and Ti(C, N) segregations may be corrected by quenching the steel from 1200-1250°C (after homogenizing for more than 1 hr) and triple recrystallization at 900-975°C to reduce the grain size. The formation of carbonitride networks may be inhibited by lowering the end temperature of hot plastic deformation in order to preclude further recrystallization. (4 illustrations, 3 tables, 6 bibliographic references).

1/1

APPROVED FOR RELEASE: 09/17/2001 CIA-RDP86-00513R002202220012-8"

"APPROVED FOR RELEASE: 09/17/2001 CIA-RDP86-00513R002202220012-8

USSR

UDC 576.851.71.097.21.083.3

BALAYEVA, N. M., and NIKOL'SKAYA, V. N., Institute of Epidemiology and Microbiology imeni Gamaleya, Academy of Medical Sciences USSR

"The Stability of Increased Virulence of Rickettsia prowazeki Vaccine Strain E"

Moscow, Zhurnal Mikrobiologii Epidemiologii i Immunobiologii, No 8, Aug 70, pp 36-38

Abstract: The virulence of R. prowazeki vaccine strain E for guinea pigs and white mice was increased by passaging it in the lungs of white mice. The increased virulence persisted through 10 passages (the observation period) in chick embryos. In guinea pigs, the vaccine produced marked immunity to a virulent culture of R. prowazeki (Breinl strain). Preservation of the virulence of the E strain after passaging in the lungs of white mice is indicative of either the selection of virulent individuals present in the original rickettsial population or a mutation in E strain rickettsia arising in the lungs of white mice, with subsequent breeding of mutants.

1/1

APPROVED FOR RELEASE: 09/17/2001 CIA-RDP86-00513R002202220012-8"

"APPROVED FOR RELEASE: 09/17/2001 CIA-RDP86-00513R002202220012-8

USSR UDC 615.371:576.851.71].015.4:616.981.711-097.5

NIKOL'SKAYA, V. N., IGNATOVICH, V. F., and MOROZOVA, M. Yu., Institute of Epidemiology and Microbiology imeni Gamaleya, USSR Academy of Medical Sciences, Moscow

"A Possibility of Using Serological Methods for Additional Evaluation of the Intensity of Typhus Immunity in Guinea Pigs"

Moscow, Zhurnal Mikrobiologii Epidemiologii i Immunobiologii, No 5, May 71, pp 137-141

Abstract: A vaccination against typhus which produces clinical immunity does not necessarily produce serological immunity. In this study performed on a large number of guinea pigs, it was shown that some vaccines produce a high titer of complement fixing antibodies which -- upon subsequent inoculation with typhus bacteria -- either falls or does not change, or rises less than two-fold. Other vaccines, though they also confer clinical immunity, give rise to a small antibody titer. After subsequent infection with the typhus pathogen, the titer increases more than four-fold, which indicates that rickettsiae -- though they do not produce clinical signs of disease -- proliferate in the body until the concentration of antibodies rises to an effective

APPROVED FOR RELEASE: 09/17/2001 CIA-RDP86-00513R002202220012-8"

"APPROVED FOR RELEASE: 09/17/2001 CIA-RDP86-00513R002202220012-8

USSR

NIKOL'SKAYA, V. N., et al, Zhurnal Mikrobiologii Epidemiologii i Immunobiologii, No 5, May 71, pp 137-141

level. It is concluded that a double determination of antibody titer in experimental animals -- once after vaccination and a second time after infection -- is a good method of evaluating the strength of immunity induced by a typhus vaccine.

2/2

APPROVED FOR RELEASE: 09/17/2001 CIA-RDP86-00513R002202220012-8"

"APPROVED FOR RELEASE: 09/17/2001 CIA-RDP86-00513R002202220012-8

Acc. Nr: AP0044593 N Ref. Code: UR0497

PRIMARY SOURCE: Klinicheskaya Meditsina, 1970, Vol 48, Nr 1, pp 17-21

THE PRIMARY RESULTS OF CONTINUOUS (ANNUAL) BICILLIN-ASPIRIN PROPHYLAXIS OF RHEUMATISM RELAPSES IN ADULTS

I. N. Mikhaylova, M. A. Monakhova, T. A. Tarasenkova, N. V. Nikolskaya, V. S. Ponomarev

Summary

The authors commit to paper the results of continuous 2½-year-long bicillin-aspirin prophylaxis of rheumatism relapses in 180 patients who have sustained the active stage of the process. The patients were subject to intramuscular injections of the new Soviet-made antibiotic bicillin in a dose of 1,500,000 Units (110 cases) or of the Czechoslovakian antibiotic pendepon in a dose of 1,00,000 Units (70 cases) once every four weeks. In spring and autumn the patients were given per os 2 gm of aspirin daily for a period of one month. In regular prophylaxis the number of rheumatism relapses decreased by 10 times, with a sharp reduction of the incidence of tonsillitis, influenza and upper respiratory catarrh. There was noted a normalization of the astreptolysin-0 titer and a significant decline of laboratory indices of the rheumatic process activity in patients affected with a continuous-recurrent form of the disease.

4th. 02

1/1

REEL/FRAME
19771269

APPROVED FOR RELEASE: 09/17/2001 CIA-RDP86-00513R002202220012-8"

"APPROVED FOR RELEASE: 09/17/2001 CIA-RDP86-00513R002202220012-8

USSR UDC 621.391

BLINOV, I. G. and NIKOL'SKAYA, T. G.

"Solving the Problem of Object Classification"

Sb. nauch. tr. po probl. mikroelektron. Mosk. in-t elektron. tekhn. (Collected Scientific Works on Problems of Microelectronics. Moscow Institute of Electronic Technology), 1972, vyp. 10, pp 98-109 (from RZh-Radiotekhnika, No 11, Nov 72, Abstract No 11 A22)

Translation: The authors study one of the methods for solving problems of object classification. The method is represented by three procedures: generation of varieties of characteristic criteria of classified objects, composition of sets from the entire variety of characteristic criteria, and determining the criteria for type of object (class). Resume.

1/1

APPROVED FOR RELEASE: 09/17/2001 CIA-RDP86-00513R002202220012-8"

"APPROVED FOR RELEASE: 09/17/2001 CIA-RDP86-00513R002202220012-8

USSR UDC 621.372.82

NIKOL'SKIY, V. V.

"General Treatment of Impedance in Electrodynamics. Part I"

Tr. Mosk. in-ta radiotekhn., elektron. i avtomatiki (Works of the Moscow Institute of Radio Engineering, Electronics and Automation), 1972, vyp. 55, pp 3-16 (from RZh-Radiotekhnika, No 11, Nov 72, Abstract No 11 B83)

Translation: From a unified point of view, starting with the generalization of the concept of impedance, the authors study problems of radiation and diffraction in free space and in hollow systems. Problems associated with free oscillation in waves are also studied. As an example, spherical and cylindrical wave channels are studied. Original artich: three illustrations and three bibliographic entries. N.S.

1/1

APPROVED FOR RELEASE: 09/17/2001 CIA-RDP86-00513R002202220012-8"

"APPROVED FOR RELEASE: 09/17/2001 CIA-RDP86-00513R002202220012-8

USSR

UDC 621.372.82

NIKOL'SKIY, V. V.

"Expanding the Treatment of Impedance"

Tr. Mosk. in-ta radiotekhn., elektron. i avtomatiki (Works of the Moscow Institute of Radio Engineering, Electronics and Automation), 1972, vyp.55, pp 34-41 (from RZh-Radiotekhnika, No 11, Nov 72, Abstract No 11 B86)

Translation: It is shown that the treatment proposed by the author on the impedance of non-closed electrodynamic systems can be extended to non-wave and non-electrodynamic problems. Original article: one illustration and eight bibliographic entries. N.S.

1/1

APPROVED FOR RELEASE: 09/17/2001 CIA-RDP86-00513R002202220012-8"

"APPROVED FOR RELEASE: 09/17/2001 CIA-RDP86-00513R002202220012-8

USSR

UDC 621.372.82

NIKOL'SKIY, V. V.

"General Treatment of Impedance in Electrodynamics. Part II"

Tr. Mosk. in-ta radiotekhn., elektron. i avtomatiki (Works of the Moscow Institute of Radio Engineering, Electronics and Automation), 1972, vyp.55, pp 17-33 (from RZh-Radiotekhnika, No 11, Nov 72, Abstract No 11 B84)

Translation: The practical significance of the treatment of impedance in power-wise, open, electrodynamic systems consists of the fact that this treatment makes it possible to use mathematical methods which do not need configurational idealization. This treatment makes it also possible to construct a general algorithm for an entire class of systems. The use of one of these methods (projection) is shown for the solution of problems associated with radiation and diffraction in a free space and in hollow systems and also for problems associated with free oscillations in the case of open connections. Original article: four illustrations and two bibliographic entries. N.S.

1/1

APPROVED FOR RELEASE: 09/17/2001 CIA-RDP86-00513R002202220012-8"

"APPROVED FOR RELEASE: 09/17/2001 CIA-RDP86-00513R002202220012-8

UNCLASSIFIED PROCESSING DATE--13NOV70

172 015

TITLE--THE STABLE EQUILIBRIUM IN SYSTEM NA, MG, CA PARALLEL TO SO SUB4, HCO SUB3 MINUS H SUB2 O AT 50DEGREESC AND P SUBCO SUB2 SIMILAR TO 1 ATM

AUTHOR-(02)-NIKOLSKAYA, YU.P., GORDEYEVA, G.I.

COUNTRY OF INFO--USSR

SOURCE--IZVESTIYA SIBIRSKOGO OTDELENIYA AKADEMII NAUK SSSR, NO 4, CERIYA, KHIMICHESKIKH NAUK, 1970, NR 2, PP 75-81

DATE PUBLISHED--------70

SUBJECT AREAS--EARTH SCIENCES AND OCEANOGRAPHY, CHEMISTRY

TOPIC TAGS--CRYSTALLIZATION, MINERAL, SODIUM COMPOUND, MAGNESIUM

CONTROL MARKING--NO RESTRICTIONS

DOCUMENT CLASS--UNCLASSIFIED

PROXY REEL/FRAME--1993/0583 STEP NO--UR/0289/70/000/000/0075/0081

CIRC ACCESSION NO--AP0113474

UNCLASSIFIED

APPROVED FOR RELEASE: 09/17/2001 CIA-RDP86-00513R002202220012-8"

"APPROVED FOR RELEASE: 09/17/2001 CIA-RDP86-00513R002202220012-8

UNCLASSIFIED PROCESSING DATE--13NOV70

2/2 015

CIRC ACCESSION NO--AP0113474

ABSTRACT/EXTRACT--(U) GP-0- ABSTRACT. THE RANGES OF CRYSTALLIZATION OF DOLOMITE IN FIVE COMPONENT SYSTEM NA, MG, CA PARALLEL TO SO SUB4, HCO SUB3 MINUS H SUB2 O AT 50DEGREESC AND P SUBCO SUB2 SIMILAR TO 1 ATM HAVE BEEN INVESTIGATED. THE STABLE EQUILIBRIUM OF THE SYSTEM COULD BE OBTAINED BY USING OF NATURAL DOLOMITE AND MAGNESITE, AS WELL AS BY THEIR SYNTHESIS IN THE SYSTEM. FACILITY: INSTITUT FIZIKO-KHIMICHESKIKH OSNOV PERERABOTKI MINERAL'NOGO SYR'YA SO AN SSSR, NOVOSIBIRSK.

UNCLASSIFIED

APPROVED FOR RELEASE: 09/17/2001 CIA-RDP86-00513R002202220012-8"

"APPROVED FOR RELEASE: 09/17/2001 CIA-RDP86-00513R002202220012-8

UDC 591.5:599.32

USSR

NIKOL'SKIY, A. A., Chair of Vertebrate Zoology, Moscow State University

"Acoustic Behavior of Day Rodents of Open Spaces"

Moscow, Vestnik Moskovskogo Universiteta, Seriya 6, Biologiya, Pochvovedeniye, No 5, Sep/Oct 70, pp 16-19

Abstract: Marmots, gophers, prairie dogs, gerbils, and certain other "day rodents of open spaces" possess an acoustic signal system consisting of the following elements: (1) primary stimulus, a potentially dangerous object that provokes a signal; (2) source of the signal, a rodent uttering the signal provoked by the primary stimulus; (3) secondary stimulus, an acoustic signal that interrupts the activity of other rodents and puts them on the alert; and (4) a signal receiver, an animal that reacts to the secondary stimulus. The primary stimulus is nonspecific. In addition to predators or man (i.e., stimuli that represent a genuine danger), ungulates, nonpredatory birds, and large unfamiliar objects may serve as primary stimuli. Another important characteristic of primary stimuli is that they must be moving. The rodents will generally not react to a stationary object, even if it is genuinely dangerous. The posture of the signaling animal depends on the distance from the primary stimulus, the behavior of the stimulus,

APPROVED FOR RELEASE: 09/17/2001 CIA-RDP86-00513R002202220012-8"

"APPROVED FOR RELEASE: 09/17/2001 CIA-RDP86-00513R002202220012-8

USSR

NIKOL'SKIY, A. A., Vestnik Moskovskogo Universiteta, Seriya 6, Biologiya, Pochvovedeniye, No 5, Sep/Oct 70, pp 16-19

and the position of the animal in relation to shelter. A rodent never emits a signal if the danger is encountered without warning far from its hole. In such cases the animal either freezes, proceeds in silence to its hole, or cries out while running.

2/2

APPROVED FOR RELEASE: 09/17/2001 CIA-RDP86-00513R002202220012-8"

"APPROVED FOR RELEASE: 09/17/2001 CIA-RDP86-00513R002202220012-8

UDC: 534.2

USSR

NIKOL'SKIY, A. A.

"Laws of Similarity for Three-Dimensional Stationary Detached Flow of Liquid and Gas Around Solids"

Uch. zap. Tsentr. aerogidrodinam. in-ta (Scientific Notes of the Central Aerohydrodynamics Institute), 1970, 1, No 1, pp 1-7 (from RZh-Mekhanika, No 9, Sep 70, Abstract No 9B359)

Translation: Within the framework of the theory of ideal liquid and gas for three-dimensional detached flow around solids of low aspect ratio (families of affine similar supporting surfaces of low aspect ratio are given by the equations $F_s(X,Y,Z)=0$, $x=\tau LX$, $y=\tau LY$, $z=LZ$, L is a constant with the dimensionality of length, τ is a dimensionless parameter) limiting processes of the form

$$\tau \to 0, \text{ when } 0 \leqslant M_\infty \leqslant 1,$$

$$M_\infty \to 0, \text{ when } M_\infty > 1,$$

$$\tau \to 0, \text{ when } M_\infty \geqslant 1, \; M_\infty \tau = k = \text{const},$$

1/2

APPROVED FOR RELEASE: 09/17/2001 CIA-RDP86-00513R002202220012-8"

"APPROVED FOR RELEASE: 09/17/2001 CIA-RDP86-00513R002202220012-8

USSR

NIKOL'SKIY, A. A., Uch. zap. Tsentr. aerogidrodinam. in-ta, 1970, 1, No 1, pp 1-7 (from RZh-Mekhanika, No 9, Sep 70, Abstract No 9B359)

are given for which the law of plane cross sections becomes asymptotically true, so that the problem of stationary three-dimensional detached flow can be reduced to the problem of two-dimensional nonstationary detached flows around flat bodies. The real flows closest to these conditions are those at high Reynolds numbers around thin bodies of fairly low aspect ratio where detached flow with spiral surfaces of the tangential velocity jump leaving the edges is formed when a liquid or gas flows around sharp leading or trailing edges. The laws of similarity are established for each of the above-mentioned limiting processes in the case of a stationary three-dimensional flow. Detailed consideration is given to flow around a rectangular wing of low aspect ratio λ at angle of attack α. It is shown that for the case of an aspect ratio at the lower limit, the coefficient of additional lift due to flow detachment is proportional to the angle of attack to the 5/3 power and to the aspect ratio to the 1/3 power. A. I. Bunimovich.

2/2

APPROVED FOR RELEASE: 09/17/2001 CIA-RDP86-00513R002202220012-8"