"APPROVED FOR RELEASE: 08/09/2001 CIA-RDP86-00513R002202330003-6

USSR

UDC: 535.853.225:535.317.1

PARITSKAYA, G. G., FAL'K, T. K.

"Investigation of Image Quality in the DFS-12 and DFS-32 Spectrometers"

Leningrad, Optiko-Mekhanicheskaya Promyshlennost', No 11, Nov 70, pp 20-23

Abstract: A new method is proposed for calculating the "instrument function" of monochromators in the case of long thin slits. The instrument function of a monochromator is the change in the radiant flux which passes through the output slit as it moves over the width of the monochromatic image of the input slit. The instrument function calculated for DFS-12 (DFS-32) spectrometers by the proposed procedure agrees satisfactorily with the experimentally determined function, both with respect to the shape of the curve and its width.

1/1

APPROVED FOR RELEASE: 08/09/2001 CIA-RDP86-00513R002202330003-6"

"APPROVED FOR RELEASE: 08/09/2001 CIA-RDP86-00513R002202330003-6

1/2 018 UNCLASSIFIED

TITLE--KIRKENDALL EFFECT IN A ONE COMPONENT SYSTEM -U- PROCESSING DATE--16OCT70

AUTHOR-(03)-GEGUZIN, YA.YE., NGUYEN, C.B., PARITSKAYA, L.N.

COUNTRY OF INFO--USSR

SOURCE--DOKL. AKAD. NAUK SSSR 1970, 190(3), 569-71

DATE PUBLISHED--------70

SUBJECT AREAS--MATERIALS, MECH., IND., CIVIL AND MARINE ENGR

TOPIC TAGS--KIRKENDALL EFFECT, COPPER ALLOY, SINTERED METAL, METAL ROLLING

CONTROL MARKING--NO RESTRICTIONS

DOCUMENT CLASS--UNCLASSIFIED

PROXY REEL/FRAME--1995/1132 STEP NO--UR/0020/70/190/003/0569/0571

CIRC ACCESSION NO--AT0116597

UNCLASSIFIED

APPROVED FOR RELEASE: 08/09/2001 CIA-RDP86-00513R002202330003-6"

"APPROVED FOR RELEASE: 08/09/2001 CIA-RDP86-00513R002202330003-6

2/2 018 UNCLASSIFIED PROCESSING DATE--16OCT70

CIRC ACCESSION NO--AT0116597

ABSTRACT/EXTRACT--(U) GP-0- ABSTRACT. DIFFUSION INDUCED POROSITY OCCURS AT THE CONTACT SURFACE OF DENSE CU (SINTERED CU) AFTER FIRING. THIS IS ATTRIBUTED TO A FRENKEL EFFECT, CONSEQUENTLY A SIMULTANEOUS COUNTER EFFECT, THE KIRKENDALL EFFECT IS SUGGESTED ALSO. IN ORDER TO PROVE IT, 3 LAYER SAMPLES WERE PREPD. WITH POROUS OUTER LAYERS (CU SHEETS ELECTROPLATED FROM AN ACID BATH AT 5 A-DM PRIME2) AND A DENSE INNER LAYER (CAST ROLLED CU IN SOME EXPTS. AND CU, ELECTROPLATED AT 0.25 A-DM PRIME2 IN OTHERS). INERT MARKERS (MO WIRES) WERE PLACED TO FIX THE POSITION OF THE CONTACT. THE THREE LAYER SAMPLES WERE FIRED AT 950DEGREES FOR 2-36 HR AND EXAMD. UNDER A MICROSCOPE AFTER POLISHING. EXPTS. PROVED THAT A KIRKENDALL EFFECT TAKES PLACE DUE TO THE ORIENTED SELF DIFFUSION OF VACANCIES. NO KIRKENDALL EFFECT WAS DETECTED IN SAMPLES WITH DENSE OUTER AND POROUS INNER LAYERS. FACILITY: KHARKOV. GOS. UNIV. IM. GOR'KOGO, KHARKOV, USSR.

UNCLASSIFIED

APPROVED FOR RELEASE: 08/09/2001 CIA-RDP86-00513R002202330003-6"

"APPROVED FOR RELEASE: 08/09/2001 CIA-RDP86-00513R002202330003-6

USSR UDC: 551.46.086

PARITSKIY, A. S., VAYNDRUK, E. S.

"A Method of Determining the Inclination of the Surface of a Wave of the Sea"

Moscow, Otkrytiya, Izobreteniya, Promyshlennyye Obraztsy, Tovarnyye Znaki, No 8, Mar 72, Author's Certificate No 330341, Division G, filed 17 Aug 70, published 24 Feb 72, p 126

Translation: This Author's Certificate introduces a method of determining the inclination of the surface of a wave of the sea by exposing it to ultrasonic oscillations, receiving the signals from the surface being studied at three or more points of reflection, comparing them with a reference signal, determining the time of propagation of the ultrasonic oscillations and the distances they travel to three or more points, and using these data to determine the nuknown slope. As a distinguishing feature of the patent, the frequency range of the registered processes is increased by using a single vertically directed beam for exposure, the regulation of the reference signal level being dependent on the received signal level.

1/1

APPROVED FOR RELEASE: 08/09/2001 CIA-RDP86-00513R002202330003-6"

"APPROVED FOR RELEASE: 08/09/2001 CIA-RDP86-00513R002202330003-6

USSR

UDC 615.21

MYKHIN, YE. A., MATKOVSKIY, K. D., and PARIY, B. I., editors

Farmakologiya Amidinovykh Soyedineniy (Pharmacology of Amidine Compounds), Kishinev, "Shtinitsa", 1972, 188 p

Translation:

Annotation

The collection presented experimental data and clinical material on the protective properties and mechanism of action of amidine compounds during hyperoxia and hypoxia as well as on the effect of these substances on physical fitness, the cardiovascular system, and uterus. The review articles on ethyrone and gutimine provide a fairly complete idea of the nature of this new and highly promising group of drugs.

The collection is of interest to pharmacologists, pathophysiologists, physiologists, surgeons, anesthesiologists, obstetricians and gynecologists, and sports physicians.

Content

Foreword... 3

Part I

Ye. A. Mukhin and B. I. Pariy. Pharmacology of Alkylisothiuronium Compounds with a Short Hydrocarbon Chain... 5

V. G. Duzhak. Pharmacology of Some Methylisothiuronium Analogs... 11

1/6

APPROVED FOR RELEASE: 08/09/2001 CIA-RDP86-00513R002202330003-6"

"APPROVED FOR RELEASE: 08/09/2001 CIA-RDP86-00513R002202330003-6

USSR

MYKHIN, YE. A., et al., Shtinitsa", 1972, 188 p

V. I. Gikavyy. Change in Oxygenation of Arterial and Venous Blood Induced by Hexonium, Ethyrone, and Combinations of the Two Agents.... 15

M. F. Bakulya and L. T. Lysyy. Effect of Ethyrone on Oxygen Tension in Various Tissues.... 23

B. I. Pariy. Oxygen Regime in White Rats Given Ethyrone Combined with Some Adrenominetics.... 26

V. F. Grati and A. P. Mileyev. Changes in Tissue Respiration of Some Organs in White Rats Treated with a Combination of Tizercine and Ethyrone... 30

A. Ye. Aleksandrova and M. F. Bakulya. Central Action of Ethylisothiuronium (Ethyrone)... 34

V. I. Gikavyy. Effect of Ethyrone on the Main Parameters of the Systemic Circulation in Cats.... 38

B. M. Vasil'yev and B. A. Samotokin. Hypertensive Effect of Ethyrone in the Treatment of Acute Hypotension During Neurosurgical Operations... 43

V. Malygin and I. Dak. Reaction of Terminal Vessels of Frog Mesentery to the Application of Ethyrone, Propylone, and Aminoethylisothiuronium... 50

2/6

APPROVED FOR RELEASE: 08/09/2001 CIA-RDP86-00513R002202330003-6"

"APPROVED FOR RELEASE: 08/09/2001 CIA-RDP86-00513R002202330003-6

USSR

MYKHIN, YE. A., et al.,"Shtinitsa", 1972, 188 p

A. P. Mileyev and I. D. Kalbe. X-ray studies on the Effect of Ethyrone, Tizercine and Combinations of the Two Agents on Evacuation Function of the Rat Gastrointestinal Tract... 53
A. B. Yeleshina. Propylone as a Stimulant of Labor... 57
A. N. Poskalenko, L. N. Granat, V. P. Makusheva, T. I. Bogdashova, and L. P. Zubareva. Pharmacological Effects of Propylone in Parturient Women ... 62
V. I. Generalov. Pharmacology of Some Isothiuronium Derivatives... 70
S. F. Frolov. Protective Effect of a Combination of Mephedole and Ethyrone During the Toxic Action of Oxygen at a Pressure of 7 atm... 74
K. L. Matkovskiy. Use of a Ganglion Block Without Hypertension to Protect Animals From Acute Oxygen Edema of the Lungs.... 77
E. B. Keptya and Ye. A. Mukhin. Changes in the Amount of Ascorbic Acid and Reduced Glutathione in White Rat Organs During Hyperbaric Oxygenation and Use of Ethyrone and Mephedole and Combinations of the Two Agents... 79
N. V. Gutsu and V. Z. Burlaku. Changes in the Amount of Ascorbic Acid in the Tissues of White Rats During Oxygen Intoxication and Use of Tizercine Alone and Combined with Ethyrone.... 84

3/6

APPROVED FOR RELEASE: 08/09/2001 CIA-RDP86-00513R002202330003-6"

"APPROVED FOR RELEASE: 08/09/2001 CIA-RDP86-00513R002202330003-6

USSR

MYKHIN, YE. A., et al., "Shtinitsa", 188 p

K. L. Matkovskiy. Effect of Ethyrone, Benzohexonium, Tizercine, and Combinations of Ethyrone with Benzohexonium and Tizercine on the Acid-Base Equilibrium in the Blood of White Rats Exposed to Oxygen at a Pressure of 6 atm... 87

E. B. Keptya and K. N. Arnaut. Morphological Changes in the Viscera of White Rats During Oxygen Intoxication and Use of Ethyrone, Mephedole and Combinations of the Two Agents... 89

N. V. Gutsu and L. M. Kabrin. Morphological Changes in the Brain and Viscera of White Rats During Hyperbaric Oxygenation and Use of Tizercine and Combinations Thereof with Ethyrone... 91

B. O. Yungmeyster. Comprehensive Hyperbaric Oxygen Therapy of Potassium Cyanide Poisoning... 96

B.O. Yungmeyster. Therapeutic Effect of Hyperbaric Oxygen Therapy of Nitrite Methemoglobinemia... 101

V. M. Vinogradov. Some Results of and Outlook for Research on Gutimine, One of the First Antihypoxic Agents... 106

T. S. Vasiyeva, L. M. Pavlova, and G. A. Bagiyan. Absorption and Excretion of S35-Labeled Gutimine After Intraperitoneal Injection... 115

4/6

APPROVED FOR RELEASE: 08/09/2001 CIA-RDP86-00513R002202330003-6"

"APPROVED FOR RELEASE: 08/09/2001 CIA-RDP86-00513R002202330003-6

USSR

MYKHIN, YE. A., et al., "Shtinitsa", 188 p

T. S. Basiyeva and L. M. Pavlova. Distribution of S^{35}-Lebeled Gutimine in White Rat Organs After Intraperitoneal Injection..... 118
R. I. Zhitnyuk, F. Yu. Rachinskiy, and S. F. Frolov. Effect of Gutimine on Intestinal Peristalsis Under Experimental Conditions.... 120
A. Ye. Aleksandrova. Effect of Gutimine on Some Indices of Carbohydrate Metabolism... 123
Yu.G. Bobkov, V. M. Vinogradov, V. M. Monagarov, V. A. Plotnikova, F. Yu. Rachinskiy, and Yu. D.Starostina. Effect of Gutimine and Several of Its Salts on Efficiency... 126
D. S. Menis. Effect of Gutimine and Gutimine α-Ketoglutarate on Uterine Efficiency under Experimental Conditions... 132
Yu. V. Tsvelev. Effect of Gutimine on the Resistance of Intra-uterine Fetus to Hypoxia... 134
L. V. Pastushenkov, Yu. G. Bobkov, R. P. Spivakova, and S. S. Guk. Content of Catecholamines in Rat Organs Under Hyperthermic Conditions and Use of Some Pharmacologic Agents..... 138
S. L. Nikolay. Pharmacologic Characteristics of Vagal Afferent Receptors Sensitive to Veratrine... 142

5/6

APPROVED FOR RELEASE: 08/09/2001 CIA-RDP86-00513R002202330003-6"

"APPROVED FOR RELEASE: 08/09/2001 CIA-RDP86-00513R002202330003-6

USSR

(2)

MYKHIN, YE. A., et al., "Shtinitsa", 188 p

S. L. Nikolay and O. S. Sherstneva. Pharmacologic Characteristics of Vagel Afferent Receptors Sensitive to Acetylcholine... 146
B. A. Dumbrava. Effect of Compensation of Diabetes Mellitus On Some Parameters of Liver Function... 151
V. A. Dumbrava. Liver Function in the Course of Comprehensive Therapy of Diabetes Mellitus... 154
I. G. Boldina and V. A. Maksimets. Effect of Levomepromazine and Ethyrone on the Course of Experimentally-Induced Traumatic Shock... 158
Abstracts..... 164

6/6

APPROVED FOR RELEASE: 08/09/2001 CIA-RDP86-00513R002202330003-6"

"APPROVED FOR RELEASE: 08/09/2001 CIA-RDP86-00513R002202330003-6

USSR

UDC 632.9/.4

PARIY, I. F., Candidate of Biological Sciences, Sinel'nikovo Selection and Testing Station, All-Union Scientific Research Institute of Corn

"Stages of the Flowering of Grain and Loose Smut"

Moscow, Zashchita Rasteniy, No 9, Sep 72, p 43

Abstract: Experiments were conducted to establish in which stage of flowering winter wheat and spring barley have the highest susceptibility to infection with loose smut. To infect the plants, a spore suspension was applied to the stigma of the flowers. The results showed that infection of susceptible varieties of wheat took place in all stages of flowering, while varieties of wheat and also of barley that had a low susceptibility were not infected at all. The stage in which infection proceeded most readily was that of full flowering and of the beginning of flowering for wheat and barley, respectively.

1/1

APPROVED FOR RELEASE: 08/09/2001 CIA-RDP86-00513R002202330003-6"

"APPROVED FOR RELEASE: 08/09/2001 CIA-RDP86-00513R002202330003-6

USSR UDC 633.11+633.16]:632.4

PARIY, I. F., Sinel'nikovskaya Experimental Selection Station

"Early Determination of the Degree of Infection of Wheat and Barley Seeds With Smut"

Moscow, Selektsiya i Semenovodstvo, No 1, 1971, p 60

Abstract: Artificially infected seeds sown in the summer are good indicators of the plants' resistance to smut. Infected spring barley and spring wheat seeds were planted (in the Central steppe region of the Ukraine) at the end of July and again the following April. After ear formation took place in the summer crops, the number of diseased plants was counted. Despite the rapid growth and development promoted by the warm soil and shorter days, the rate of infection was the same as among plants grown the following spring. The susceptible varieties were seriously affected while the more resistant ones remained resistant. Thus, the fate of artificially infected seeds planted in the summer can provide a fairly reliable clue to the fate of the regular spring crop.

1/1

APPROVED FOR RELEASE: 08/09/2001 CIA-RDP86-00513R002202330003-6"

"APPROVED FOR RELEASE: 08/09/2001 CIA-RDP86-00513R002202330003-6

1/2 013 UNCLASSIFIED

TITLE--USE OF CHROMATOGRAPHIC APPARATUS TO STUDY THE STRUCTURE OF LIQUID VAPOR PHASE EQUILIBRIUM DIAGRAMS -U- PROCESSING DATE--02OCT70

AUTHOR-(03)-KIVA, V.N., PARIYCHUK, L.V., SERAFIMOV, L.A.

COUNTRY OF INFO--USSR

SOURCE--ZH. FIZ. KHIM. 1970, 44(1), 225-7

DATE PUBLISHED--------70

SUBJECT AREAS--CHEMISTRY

TOPIC TAGS--PHASE EQUILIBRIUM, PHASE DIAGRAM, ORGANIC SOLVENT, GAS CHROMATOGRAPHY, AZEOTROPIC MIXTURE

CONTROL MARKING--NO RESTRICTIONS

DOCUMENT CLASS--UNCLASSIFIED

PROXY REEL/FRAME--1989/0805 STEP NO--UR/0076/70/044/001/0225/0227

CIRC ACCESSION NO--AP0107347

UNCLASSIFIED

APPROVED FOR RELEASE: 08/09/2001 CIA-RDP86-00513R002202330003-6"

"APPROVED FOR RELEASE: 08/09/2001 CIA-RDP86-00513R002202330003-6

2/2 013 UNCLASSIFIED PROCESSING DATE--02OCT70

CIRC ACCESSION NO--AP0107347

ABSTRACT/EXTRACT--(U) GP-0- ABSTRACT. THE GAS CHROMATOGRAPHIC SEPN. IS DESCRIBED OF BINARY MIXTS. OF ORG. SOLVENTS (C SUB6 H SUB6, DIOXANE, ME SUB2 CO, CCL SUB4, CHCL SUB3, HEXANE, ETC.) BY EVAPN. OF A SAMPLE INTO FLOWING H OR HELIUM WITH A COLUMN FILLED WITH LOW ADSORPTION ACTIVITY PACKING WITHOUT A STATIONARY PHASE. THE POSSIBILITY OF USING THE KATHAROMETER RESPONSE TO THE LIQ. COMPN. TO IDENTIFY AZEOTROPIC MIXTS. IS SHOWN.

UNCLASSIFIED

APPROVED FOR RELEASE: 08/09/2001 CIA-RDP86-00513R002202330003-6"

"APPROVED FOR RELEASE: 08/09/2001 CIA-RDP86-00513R002202330003-6

PARIYSKAYA, A. N.

UDC 576.851

VARIABILITY AND SELECTION OF NODULE BACTERIA

[Article by Academician A. A. Imshenetskiy, Candidate of Biological Sciences A. N. Pariyskaya, Moscow, Vestnik Akademii Nauk SSSR, Russian, No 3, March 1972, pp 53-60]

The process of fixation of molecular nitrogen, carried out by microorganisms, is not within the capability of the cells of all other higher and lower life forms. Investigation of this process is of exceptional importance for comparative physiology and biochemistry of microorganisms, since nitrogen-fixing microorganisms are present in relatively ancient and new forms in the evolutionary sense.

It is quite obvious that clostridium existed on the earth as a strict anaerobe even when the earth's atmosphere was devoid of oxygen. The same is true of photosynthesizing bacteria not producing oxygen. The younger forms include a large group of nitrogen-fixing organisms that can multiply both under aerobic and anaerobic conditions, although they fix molecular nitrogen only in anaerobic conditions. Azotobacter is a classic aerobe that does not multiply under anaerobic conditions. This series closes the blue-green algae which, although producing oxygen, still fix atmospheric nitrogen in the soil, and in bodies of water, nitrogen dissolved in water.

It must be emphasized that nitrogenase, which catalyzes the nitrogen fixation process, does not function in the presence of oxygen and, consequently, all the above-mentioned microorganisms have special mechanisms that protect them from oxygen. The possibility is not excluded that this is the so-called confirmation defense mechanism developed through evolution.

No less important is investigation of the process of fixation of molecular nitrogen for agricultural purposes. For several millennia the countries of Asia have been harvesting two rice crops annually without adding a single gram of mineral fertilizers containing nitrogen to the soil. All the nitrogen removed from the soil with the crops got there as a result of the vital activity of nitrogen-fixing microorganisms, primarily blue-green algae which inhabit the water of the rice fields.

JPRS 55889
4 May 72

APPROVED FOR RELEASE: 08/09/2001 CIA-RDP86-00513R002202330003-6"

"APPROVED FOR RELEASE: 08/09/2001 CIA-RDP86-00513R002202330003-6

1/2 016 UNCLASSIFIED PROCESSING DATE--18SEP70

TITLE--EXPERIMENTAL PRODUCTION OF RHIZOBIUM MELILOTI MUTANTS WITH MODIFIED ACTIVITY -U-

AUTHOR-(03)-IMSHENETSKIY, A.A., PARIYSKAYA, A.N., LOPES, L.E.

COUNTRY OF INFO--USSR

SOURCE--MIKROBIOLOGIYA, 1970, VOL 39, NR 2, PP 343-347

DATE PUBLISHED-------70

SUBJECT AREAS--BIOLOGICAL AND MEDICAL SCIENCES

TOPIC TAGS--ANTIBIOTIC RESISTANCE, BACTERIA MUTATION, MUTAGEN, NITROSO COMPOUND, UREA

CONTROL MARKING--NO RESTRICTIONS

DOCUMENT CLASS--UNCLASSIFIED

PROXY REEL/FRAME--1985/0398 STEP NO--UR/0220/70/039/002/0343/0347

CIRC ACCESSION NO--AP0100884

UNCLASSIFIED

APPROVED FOR RELEASE: 08/09/2001 CIA-RDP86-00513R002202330003-6"

"APPROVED FOR RELEASE: 08/09/2001 CIA-RDP86-00513R002202330003-6

2/2 016 UNCLASSIFIED PROCESSING DATE--18SEP70

CIRC ACCESSION NO--AP0100884

ABSTRACT/EXTRACT--(U) GP-0- ABSTRACT. THE PURPOSE OF THIS WORK WAS TO OBTAIN MUTANTS OF NODULE BACTERIA (A) WITH MODIFIED ABILITY FOR SYMBIOSIS AND (B) BEARING LABEL OF AUXOTROPHITY AND RESISTANCE TO ANTIBIOTICS. ALL DEGREES OF ACTIVITY WERE ESTABLISHED IN 12 MUTANTS OF RH. MELILOTI, INDUCED BY NITROSOMETHYLUREA (NMU) AND RESISTANT TO NEOMYCIN. ALL OF 20 SPONTANEOUS MUTANTS OF RH. MELILOTI, RESISTANT TO STREPTOMYCIN, WERE ACTIVE AND 4 MUTANTS SURPASSED THE PARENT STRAIN BY THEIR ACTIVITY. NO AUXOTROPHIC MUTANTS OF RH. MELILOTI L-1 COULD BE OBTAINED BY MEANS OF UV, NMU, HNO SUB2 AND ETHYLENEIMINE. A RAPID QUANTITATIVE ACCOUNT OF VARIOUS NODULE BACTERIAL STRAINS IN A NODULE WAS SHOWN TO BE POSSIBLE USING THE LABEL OF RESISTANCE TO ANTIBIOTICS AND THE METHOD OF REPLICA PLATING. THIS IS ESSENTIAL FOR DIFFERENTIATION BETWEEN CULTURED AND WILD STRAINS, FOR STEP WISE SELECTION UNDER NATURAL CONDITIONS AND FOR COMPARISON OF STRAIN VIRULENCE.

UNCLASSIFIED

APPROVED FOR RELEASE: 08/09/2001 CIA-RDP86-00513R002202330003-6"

"APPROVED FOR RELEASE: 08/09/2001 CIA-RDP86-00513R002202330003-6

UDC: 621.315.592

USSR

PARITSKIY, L. G., RYVKIN, S. M., and YARZHEMBITSKIY, V. B.,
A. F. Ioffe Physico-Technical Institute

"Obtaining Photographic Images on the Surface of a Class of Semiconductors With an Active Gaseous Medium"

Leningrad, Fizika i tekhnika poluprovodnikov, No 7, 1972, pp 1400-1401

Abstract: Because research in electronic phenomena of adsorption and catalysis in semiconductors offers opportunities for exploration of gas-adsorption photographic processes, the authors present their ideas on the subject in this brief communication, and consider a type of semiconductor reaction with the molecules of an adsorbent reagent controlled by active radiation. In this type, the reagent is reduced, or oxidized, at the semiconductor surface with the participation of unbalanced electrons, or holes, and the interactions of the products of this reaction with the semiconductor material. The image is then formed by local action at the surface when the reaction products leave the surface or through color-insoluble products of the reaction adsorbed on the surface. It is noted that a photographic effect was also detected on

1/2

APPROVED FOR RELEASE: 08/09/2001 CIA-RDP86-00513R002202330003-6"

"APPROVED FOR RELEASE: 08/09/2001 CIA-RDP86-00513R002202330003-6

USSR

PARITSKIY, L. G., et al, Fizika i tekhnika poluprovodnikov, No 7, 1972, pp 1400-1401

photosensitive PbS surfaces in mixed saline and acetic acid vapors.

2/2

APPROVED FOR RELEASE: 08/09/2001 CIA-RDP86-00513R002202330003-6"

"APPROVED FOR RELEASE: 08/09/2001 CIA-RDP86-00513R002202330003-6

USSR UDC: 621.315.592

IVANOVA, Ye. I., BOVOGRUDSKIY, B. V., PARITSKIY, L. G., Physicotechnical Institute imeni A. F. Ioffe, Academy of Sciences of the USSR, Leningrad

"A Semiconductor Photographic System Based on High-Resistance Gallium Arsenide"

Leningrad, Fizika i Tekhnika Poluprovodnikov, Vol 6, No 9, Sep 72, pp 1831--1834

Abstract: A semiconductor photographic system based on high-resistance gallium arsenide without a protective coating on the semiconductor is proposed which combines the advantages of the photoconductographic and semiconductor--electrolyte photographic systems. The photographic process is diagrammed in the figure. The image is exposed on photoconductor (1) on the same side as semitransparent nickel electrode (2). A current-conducting cellophane film (3) impregnated with electrolyte is pressed tightly against the photoreceiver from the other side. The area of the film is greater than that of the photoconductor, and the excess area is in contact with a copper or graphite counter-electrode (4). During exposure the minus side of battery B is connected to the semitransparent nickel electrode, and the plus side

APPROVED FOR RELEASE: 08/09/2001 CIA-RDP86-00513R002202330003-6"

"APPROVED FOR RELEASE: 08/09/2001 CIA-RDP86-00513R002202330003-6

USSR

IVANOVA, Ye. I. et al., Fizika i Tekhnika Poluprovodnikov, Vol 6, No 9, Sep-72, pp 1831-1834

is connected to the counter-electrode. The counter-electrode (anode) is located to the side of the frame area at such a distance that the products of anode reaction formed in the thin film around the counter-electrode can not diffuse into the frame area and fog the image. The electrical and optical characteristics of the proposed system are discussed.

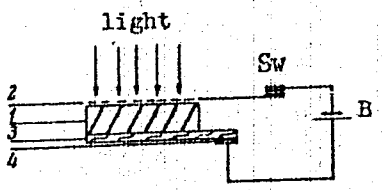

2/2

APPROVED FOR RELEASE: 08/09/2001 CIA-RDP86-00513R002202330003-6"

"APPROVED FOR RELEASE: 08/09/2001 CIA-RDP86-00513R002202330003-6

UDC 621.315.592

USSR

GORLIN, G. B., PARITSKIY, L. G., RYVKIN, S. M., BAGDANAVICHUS, A. A.

"Possibility of Using the Electrophotographic Semiconductor-Dielectric System in Long Wave Semiconductor Photography"

Leningrad, Fizika i Tekhnika Poluprovodnikov, Vol 6, No 2, 1972, pp 427-428

Abstract: Photography in the long wave range is possible on the basis of the principle of controllable sensitivity [L. G. Paritskiy, et al., Zh. nauch. i prikl. fotog. i kinematogr., No 15, 185, 1970; L. G. Paritskiy, et al., FTP, No 4, 764, 1970]. The implementation of this principle requires a device in which the photographic sensitivity is switched on electrically or otherwise only at the time of exposure to avoid fogging of the photographic film by the equilibrium background radiation. These requirements are satisfied by the electrographic semiconductor-dielectric system [S. G. Grenishin, Elektrofotograficheskiy protsess, Nauka Press, Moscow, 1970; R. Shaffert, Elektrofotografiya, Mir Press, Moscow, 1968] investigated in this article. A layer of semiinsulating GaAs alloyed with zinc 1,000 microns thick with a specific resistance of 10^8 ohm-cms was used as the photosemiconductor. The dielectric layer was a polyethylene film 10 microns thick with a conducting coating. The light source had a light flux power to $3 \cdot 10^{-2}$ watts/cm^2. It was assumed that the charge

1/2

APPROVED FOR RELEASE: 08/09/2001 CIA-RDP86-00513R002202330003-6"

"APPROVED FOR RELEASE: 08/09/2001 CIA-RDP86-00513R002202330003-6

USSR

GORLIN, G. B., et al., Fizika i Tekhnika Poluprovodnikov, Vol 6, No 2, 1972, pp 427-428

transfer could occur through a gap filled with liquid nitrogen. The semiconducting layer and the dielectric layer were clamped between conducting electrodes and the device was charged with liquid nitrogen to complete cooling. Then simultaneously with illumination, a voltage pulse lasting 80 milliseconds was applied to the conducting electrodes. Even with a voltage pulse of 8 kilovolts, the charge transfer did not take place until experiments were performed in which the system cooled by submerging completely in liquid nitrogen was partially extracted to the level at which the semiconductor contact with the dielectric was above the nitrogen surface. Charge transfer took place after removal of the nitrogen in the gap for an 80 millisecond, 3 kilovolt pulse.

2/2

APPROVED FOR RELEASE: 08/09/2001 CIA-RDP86-00513R002202330003-6"

"APPROVED FOR RELEASE: 08/09/2001 CIA-RDP86-00513R002202330003-6

USSR UDC 621.315.592

~~PARITSKIY, L.~~ G., and RYVKIN, S. M.

"Using Semiconductors for a Photographic Process in the Long-Wave Spectral Region"

Leningrad, Fizika i Tekhnika Poluprovodnikov, Vol 4, No 4, 1970, pp 764-771

Abstract: This is the continuation of an earlier article by the same authors concerning the extension of infrared photography beyond the limits imposed by conventional photographic methods into the middle and longer wave infrared regions, and the improvement of photographic sensitivity to shorter wave-length infrared radiation. The present article discusses several ideas for semiconductor photographic processes providing a theoretical possibility of obtaining images in a broad region of the long-wave part of the spectrum. One of the impediments to progress in sensitivity to infrared radiation is fogging of the photographic plate due to background thermal activity. The authors propose and explain their principle of controlled sensitivity, which consists in giving the photographic material its sensitivity only during the exposure interval, and offer preliminary results of its practical realization in photographic systems using semiconductor materials. Drawings are given

1/2

APPROVED FOR RELEASE: 08/09/2001 CIA-RDP86-00513R002202330003-6"

"APPROVED FOR RELEASE: 08/09/2001 CIA-RDP86-00513R002202330003-6

USSR

PARITSKIY, L. G., and RYVKIN, S. M., Fizika i Tekhnika Poluprovodnikov, Vol 4, No 4, 1970, pp 764-771

of four such systems. The authors express their gratitude to Boris Pavlovich Konstantinov, now deceased, on whose initiative these researches were begun.

2/2

7433
CSO: 1861-W

- END -

APPROVED FOR RELEASE: 08/09/2001 CIA-RDP86-00513R002202330003-6"

"APPROVED FOR RELEASE: 08/09/2001 CIA-RDP86-00513R002202330003-6

USSR

ABDULLAYEV, G. B., ALIYEVA, M. Kh., GORYACHEV, D. N., KAZIYEV, F. N., PARITSKIY, L. G., and RYVKIN, S. M.

UDC: 621.315.592

"Obtaining Photographic Images on Fine Films of Gallium and Indium Selenides"

Leningrad, Fizika i tekhnika poluprovodnikov, vol 6, No 6, 1972, pp 1166-1168

Abstract: This paper is a sequel to an earlier article by some of the authors named above (D. N. Goryachev, et al, 4, 1970, p 1580) published in the journal named above, in which the use of thin films of lead selenides and sulphides for retaining photographic images was discussed. In the present brief communication, the possibility of getting photographic images on thin films of gallium and indium selenides, of the lesser studied class of semiconductors of the $A^{III}B^{IV}$ type, is considered. To do this, use is made of the dependence of the oxide reproduction process speed at the semiconductor-electrolyte interface on the illumination the semiconductor is exposed to. For the experiments described in this article, polycrystals of p-type GaSe were used in films 0.6 to 0.8 μ thick as well as n-type InSe in films about one micron thick, deposited on glass substrates by sputtering in a vacuum.

1/2

APPROVED FOR RELEASE: 08/09/2001 CIA-RDP86-00513R002202330003-6"

"APPROVED FOR RELEASE: 08/09/2001 CIA-RDP86-00513R002202330003-6

(2)

UDC: 621.315:592

USSR

ABDULLAYEV, G. B., et al, Fizika i tekhnika poluprovodnikov, vol 6, No 6, 1972, pp 1166-1168

In the case of InSe, it was found that the images on it may be strengthened through the use of physical developers.

2/2

APPROVED FOR RELEASE: 08/09/2001 CIA-RDP86-00513R002202330003-6"

"APPROVED FOR RELEASE: 08/09/2001 CIA-RDP86-00513R002202330003-6

USSR UDC 621.371:551.510.535

GUREVICH, A. V., PARIYSKAYA, L. V., TUSHENTSOVA, I. A., and TSEDILINA, Ye. Ye.

"Trapping Radio Waves in the Ionospheric Waveguide Channel"

Moscow, V sb. X Vses. konf. po rasprostr. radiovoln. Tezisy dokl. Sekts. 1 (Tenth All-Union Conference on the Propagation of Radio Waves; Report Theses; Section 1--collection of works) "Nauka," 1972, p 354 (from RZh--Radiotekhnika, No 10, 1972, Abstract No 10A334)

Translation: Pickup due to nonlinear processes and changes in the ionosphere along the beam trajectory (i.e., due to the longitude-latitude of the ionosphere nonuniformity) is studied. The frequency regions and radiation angles at which pickup occurs are investigated. For the specific model of a quiet ionosphere, the dependence of trapping conditions on the geographical coordinates of the radiation, the time of day, and the direction of the radiation, are examined. Resume

1/1

APPROVED FOR RELEASE: 08/09/2001 CIA-RDP86-00513R002202330003-6"

"APPROVED FOR RELEASE: 08/09/2001 CIA-RDP86-00513R002202330003-6

USSR

UDC 621.59

VERGOLA, V. Ye., GORBACH, V. P., PARIYSKIY, V. B., SHAPOVLOV, I. A.

"Machine for Investigation of Deformations at Temperatures Down to 1.5°K"

Moscow, Pribory i Tekhnika Eksperimenta, pp 252-254

Abstract: A low temperature machine is described for studies of deformation at temperatures down to 1.5°K, allowing up to nine specimens to be compression tested at the same time. The machine is designed for forces up to 200 kg, provides for 18 rates of deformation between 12 and $9 \cdot 10^{-5}$ mm/min and a maximum sensitivity of 25 g/1 mm of the strip chart recorder scale. Diagrams are recorded automatically in load-time co-ordinates.

1/1

APPROVED FOR RELEASE: 08/09/2001 CIA-RDP86-00513R002202330003-6"

"APPROVED FOR RELEASE: 08/09/2001 CIA-RDP86-00513R002202330003-6

USSR

UDC 621.396.677:523.164

KARDASHEV, N. S., PARIYSKIY, YU. N., SOKOLOV, A. G.

"Cosmic Radioastronomy"

Uspekhn. fiz. nauk (Progress in the Physical Sciences), 1971, Vol 104, No 2, pp 328-331 (from RZh-Radiotekhnika, No 10, Oct 71, Abstract No 10B14)

Translation: The prospects of research in the ordinary radioastronomy field were investigated without touching on the regions where the Earth's atmosphere and ionosphere are completely opaque. The restrictions preventing the creation of antennas on the Earth with reflector diameters >100 meters -- the presence of gravitational force leading to deformation of the structural elements -- are analyzed. The possibility of constructing antenna elements in space with dimensions as large as one might like is noted since the basic forces acting on a space antenna are the light pressure, the tidal force of the Earth and the centrifugal force on rotation. These forces are several orders less than the gravitational force. It is noted that in outer space it is possible to create continuous parabolic reflectors with dimensions on the order of 1 km and more. The advantage of space telescopes is also a significant reduction in the interference level. An important area of space radioastronomy is further improvement of the angular resolution by taking one of the

1/2

APPROVED FOR RELEASE: 08/09/2001 CIA-RDP86-00513R002202330003-6"

"APPROVED FOR RELEASE: 08/09/2001 CIA-RDP86-00513R002202330003-6

USSR

KARDASHEV, N. S., et al., Uspekhn. fiz. nauk, 1971, Vol 104, No 2, pp 328-331

interferometer antennas a large distance beyond the limits of the Earth. For very large interferometer bases, it is also possible to construct a three-dimensional image of the sources, determine the trigonometric distances to the farthest sources and study the curvature of space. It is noted that a significant obstacle in creating space interferometers can be the effect of radio wave scattering in the interstellar medium. There are 2 illustrations and a 3-entry bibliography.

2/2

APPROVED FOR RELEASE: 08/09/2001 CIA-RDP86-00513R002202330003-6"

"APPROVED FOR RELEASE: 08/09/2001 CIA-RDP86-00513R002202330003-6

Acc. Nr: AP0047232 Ref. Code: UR0504

PRIMARY SOURCE: Terapevticheskiy Arkhiv, 1970, Vol 42, Nr 1, pp 70-75

FUNCTIONAL CONDITION OF THE POLYCYSTIC KIDNEYS AND DISTRIBUTION OF FLUID IN THE ORGANISM

M. G. Sheverda, A. Z. Parkhomchuk

Summary

The authors studied the functional condition of the polycystic kidneys, their participation in the electrolyte metabolism and distribution of fluid in the organism of 27 patients at the age of 18—60 and in 25 practically healthy individuals. In 24 out of 27 patients arterial pressure was higher than the age norm (140/90—225/115 mm Hg). Moderate azotemia (up to 60 mg%) was observed in 6 persons. In the examined patients a drop in the tubular reabsorbtion of the water and renal plasmaflow, as well as moderate decrease of glomerular filtration were revealed. There was no parallelism between the water and sodium reabsorbtion, the latter being higher and occured mainly in the distal portion of the tubules. A drop in tubular reabsorbtion of the water was due to the presence of bilateral chronic pyelonephritis. Preservation and increase of tubular reabsorbtion of sodium depends on secondary hyperaldosteronism, to the presence of which there testified retention of sodium in the erythrocytes, decrease of diurnal urine excretion of sodium, lowering of sodium/potassium ration in saliva, lowering of the plasma sodium/sodium gradient of erythrocytes.

REEL/FRAME

19790736

APPROVED FOR RELEASE: 08/09/2001 CIA-RDP86-00513R002202330003-6"

"APPROVED FOR RELEASE: 08/09/2001 CIA-RDP86-00513R002202330003-6

P

USSR

PARKHOMENKO, A.

"Noise and Noiseproofness of Radio Technical Devices"

Moscow, Radio, No 6, June 1970, pp 10-12

Abstract: This article contains a discussion of jamming equipment and means of preventing jamming. It is pointed out that the methods and means of creating noise classified in this article can be subdivided into two groups: active and passive interference. The former can be applied against practically all radio-electronic devices which contain receivers. The latter can be used only to suppress radioelectronic devices using radar principles, that is, receiving signals reflected from a target.

It is noted that the American Armed Forces have more than 400 [illegible] of jamming stations and equipment connected with them. The discussion of jamming equipment is general and emphasis is placed on attributes for classifying types of interference and jamming devices. A classification scheme is presented for classifying active noise devices.

1/2

APPROVED FOR RELEASE: 08/09/2001 CIA-RDP86-00513R002202330003-6"

"APPROVED FOR RELEASE: 08/09/2001 CIA-RDP86-00513R002202330003-6

USSR

PARKHOMENKO, A., Radio, No 6, June 1970, pp 10-12

Various procedures for applying passive noise are discussed. Again the discussion is quite general and centers around the use of dipole reflectors. Various usage of passive noise such as deflection of antiaircraft missiles with homing devices are mentioned.

Means of combatting jamming are divided into two basic areas -- improvement of organization of the use of radiotechnical devices under noise conditions and special technical measures. It is pointed out that positive results are obtained only by combining these two areas. A brief historical account of anti-jamming devices is given, and the importance of training radio operators to receive data under noise conditions by using simulators in training courses is emphasized. Techniques for creating active and passive noise and combatting it are listed briefly.

2/2

APPROVED FOR RELEASE: 08/09/2001 CIA-RDP86-00513R002202330003-6"

"APPROVED FOR RELEASE: 08/09/2001 CIA-RDP86-00513R002202330003-6

PARKHOMENKO, A. I.

AA0044234

UR 0482

Soviet Inventions Illustrated, Section II Electrical, Derwent,

2/70

243680 CABLE LAYING MACHINE digs trenches for cables along an old cable. A track laying motor vehicle pulls a plough. The couplingbetween the plough and the towing motor is pneumatic and it is controlled by radio signals. The level and the direction of ploughing are determined by the relative position of the plough to the cable.

23.3.68 as 1228413/29-14. YA.I.MARCHEVSKI et al(3.10.69) Bul 17/14.5.69. Class 21c. Int.Cl. H 02g.

AUTHORS: Marchevskiy, Ya. I., Furto, G. S., Fishgal, S. I., Balaban, A. S., Pil'ganchuk, P. N., Imereli, V. B., Stepanenko, L. K., Parkhomenko, A. I., Min'kovskaya, S. M., Voznesenskiy, I. A., Vishnyakov, I. Ye., Zinoveyev, A. I., Razumovskiy, O. V., Khrulev, V. V., Politova, A. Ye., Khayzeruk, Ye. M., Smirnov, V. I., Malakhova, V. M.

1/2

18

19770733

APPROVED FOR RELEASE: 08/09/2001 CIA-RDP86-00513R002202330003-6"

"APPROVED FOR RELEASE: 08/09/2001 CIA-RDP86-00513R002202330003-6

10044234

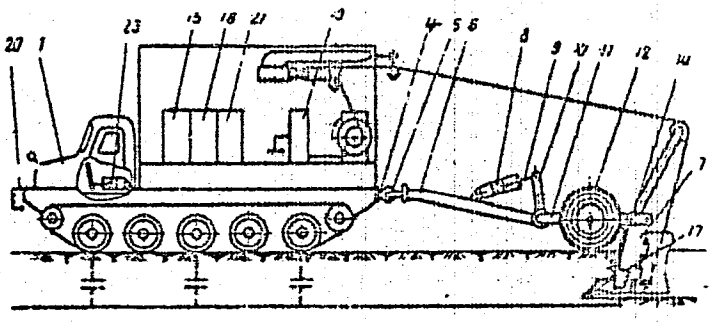

2/2

APPROVED FOR RELEASE: 08/09/2001 CIA-RDP86-00513R002202330003-6"

"APPROVED FOR RELEASE: 08/09/2001 CIA-RDP86-00513R002202330003-6

USSR

UDC 669.71.053.24

OSTANIN, YU. D., KISELEV, V. P., DRESVIN, S. V., PARKHOMENKO, A. S.

"Study of the Power Characteristics of a Plasmatron and Determination of Certain Parameters of the Argon Plasma Arc"

Tr. Vses. N-i. i Proyektn. In-ta. Alyumin., Magn. i Elektrodn. Prom-sti [Works of All-Union Scientific Research and Planning Institute of the Aluminum, Magnesium and Electrode Industry], 1970, no. 71, pp 201-207. (Translated from Referativnyy Zhurnal Metallurgiya, No. 5, 1971, Abstract No. 5 G129 by the authors).

Translation: The energetic characteristics of a plasmatron suggested for the performance of technological processes involved in thermal methods of the production and refining of Al are studied. The basic parameters of the argon plasma arc are determined: arc temperature 11,000-14,000°K, heat flux $(1.29-3.62)\cdot 10^4$ w/cm^2. 5 figs; 1 table.

1/1

APPROVED FOR RELEASE: 08/09/2001 CIA-RDP86-00513R002202330003-6"

"APPROVED FOR RELEASE: 08/09/2001 CIA-RDP86-00513R002202330003-6

USSR

BOLAROVICH, M. P., PARKHOMENKO, E. I., BAYUK, Ye. I.

"The Dependence Between Electrical and Elastic Parameters of Rock"

Fiz. Svoystva Gorn. Porod Pri Vysok. Termodinam. Parametrakh [Physical Properties of Rock at High Thermodynamic Parameters -- Collection of Works], Kiev, Nauk Dumka Press, 1971, pp 66-69, (Translated from Referativnyy Zhurnal, Mekhanika, No 4, 1972, Abstract No 4 V853 by I. F. Zharikov).

Translation: The relationship of conductivity of rock with propagation velocity of elastic waves is studied. It is demonstrated that for granite-diorite rocks, the change in rock composition from granite to diorite causes an increase both in longitudinal wave velocity and in conductivity. Studies of the influence of the structural factor are performed on a group of gabbro-basalts, for which the areas of curves showing dependence of longitudinal wave velocities on pressure and the range of values of conductivity at 200° are presented.

1/1

APPROVED FOR RELEASE: 08/09/2001 CIA-RDP86-00513R002202330003-6"

"APPROVED FOR RELEASE: 08/09/2001 CIA-RDP86-00513R002202330003-6

USSR

UDC 621.575:536.24.001.5

ROZENFEL'D, L. M., PANIYEV, G. A., KUZ'MITSKIY, Yu. V., and PARKHOMENKO, E. P., Institute of Thermal Physics, Siberian Branch, Academy of Sciences USSR

"Experimental Investigation of Absorption and Desorption of Water Vapors by a Solution of Lithium Bromide"

Moscow, Kholodil'naya Tekhnika, No 10, Oct 72, pp 31-35

Abstract: This work was devoted to an investigation of mass-transfer units with a developed phase--mass-transfer unit contact surface using spraying type mass-transfer units. A schematic and picture of the unit are given for investigating the adiabatic-isobaric processes of absorption and desorption of water vapors by a solution of lithium bromide. Tests were conducted in a steady-state mode of operation of the experimental unit at constant internal and external parameters and observation of thermal balance.

Graphs were plotted for the change of relative saturation of solution and change of temperature of the dispersed liquid flow along the absorber height and the change of relative vaporization of the solution and change of temperature of the dispersed flow of liquid along the generator height. From

1/2

APPROVED FOR RELEASE: 08/09/2001 CIA-RDP86-00513R002202330003-6"

"APPROVED FOR RELEASE: 08/09/2001 CIA-RDP86-00513R002202330003-6

USSR

ROZENFEL'D. L. M., et al., Kholodil'naya Tekhnika, No 10, Oct 72, pp 31-35

these graphs an analysis was made which made possible the conclusion that the most intensive process of absorption occurs directly behind the sprayer. The conducted tests show the mass-transfer to have a high efficiency of the studied processes and permitted to establish the characteristic features of absorption and desorption in sprayer type units. 5 figures, 1 table, 5 bibliographical references.

2/2

APPROVED FOR RELEASE: 08/09/2001 CIA-RDP86-00513R002202330003-6"

"APPROVED FOR RELEASE: 08/09/2001 CIA-RDP86-00513R002202330003-6

1/2 025 UNCLASSIFIED PROCESSING DATE--04DEC70

TITLE--ALLOY ELEMENT WASTE IN HIGH SPEED STEEL MELTS --U-

AUTHOR-(04)-CHUYKO, N.M., GASIK, M.I., ZAOZERNYY, N.T., PARKHOMENKO, G.P.

COUNTRY OF INFO--USSR

SOURCE--MOSCOW, METALLURG., NO 5, MAY 70, PP 22-24

DATE PUBLISHED----MAY70

SUBJECT AREAS--MATERIALS

TOPIC TAGS--HIGH SPEED STEEL, METAL MELTING, ALLOY DESIGNATION, STEEL SCRAP, TUNGSTEN STEEL, VANADIUM STEEL, CHROMIUM STEEL, METALLURGIC RESEARCH FACILITY, ARC FURNACE/(U)R9 HIGH SPEED STEEL, (U)R12 HIGH SPEED STEEL, (U)R18 HIGH SPEED STEEL

CONTROL MARKING--NO RESTRICTIONS

DOCUMENT CLASS--UNCLASSIFIED

PROXY REEL/FRAME--3007/0407 STEP NO--UR/0130/70/000/005/0022/0024

CIRC ACCESSION NO--AP0135880

UNCLASSIFIED

APPROVED FOR RELEASE: 08/09/2001 CIA-RDP86-00513R002202330003-6"

"APPROVED FOR RELEASE: 08/09/2001 CIA-RDP86-00513R002202330003-6

2/2 025 UNCLASSIFIED PROCESSING DATE--04DEC70

CIRC ACCESSION NO--AP0135880

ABSTRACT/EXTRACT--(U) GP-0- ABSTRACT. THE ALLOYING OF HIGH SPEED STEEL IN ELECTRIC ARC FURNACES IS ACCOMPANIED BY SUBSTANTIAL LOSSES OF SUCH ALLOYING ELEMENTS AS TUNGSTEN, VANADIUM, AND CHROMIUM. THE PURPOSE OF THIS ARTICLE IS TO CLARIFY THE BASIC CAUSES OF INCREASING LOSSES IN TUNGSTEN AND OTHER ALLOYING ELEMENTS DURING THE ELECTRIC ARC PROCESS. IN THE COURSE OF THIS STUDY, A STATISTICAL ANALYSIS WAS MADE OF 479 ALLOYS OF R18, R12, AND R9 STEEL AT AN UNIDENTIFIED PLANT IN 1968. THE MELTS WERE MADE IN FURNACES WITH CAPACITIES OF 7.5 AND 17.5 TONS. THE R18 STEEL CONTAINED 50PERCENT HIGH SPEED STEEL SCRAP AND THE REQUIRED QUANTITY OF FERROTUNGSTEN; THE R12 AND R9 STEELS WERE OBTAINED BY REMELTING THE SCRAP. THE STATISTICS SHOWED THAT THE TUNGSTEN LOSS WAS FROM 8 TO 13PERCENT, THE VANADIUM LOSS 18-28PERCENT, AND THE CHROMIUM LOSS ABOUT 13PERCENT. AN ACCOMPANYING TABLE SHOWS THE LOSSES FOR EACH ELEMENT IN PERCENTAGE, KOLOGRAMS PER METER, AND RUBLES PER METER FOR THE THREE STEEL TYPES. THERE IS ALSO A TABLE GIVING THE RESULTS OF R18 SMELTING IN A 7.5 TON CAPACITY ARC FURNACE. FINALLY, THERE ARE THREE CURVES SHOWING THE LOSS OF TUNGSTEN IN ALLOYING R18 STEEL AS A FUNCTION OF THE DURATION OF THE SMELTING PERIOD, OF THE TIME OF YEAR, AND OF THE DURATION OF R18 SCRAP REMELTING. FACILITY: DNEPROPETROVSK METALLURGICAL INSTITUTE.

UNCLASSIFIED

APPROVED FOR RELEASE: 08/09/2001 CIA-RDP86-00513R002202330003-6"

"APPROVED FOR RELEASE: 08/09/2001 CIA-RDP86-00513R002202330003-6

Steels

USSR

UDC 669.187.2:669.046.548.2

CHUYKO, N. M., GASIK, M. I., ZAOZERNYY, N. T., PARKHOMENKO, G. P.,
Dnepropetrovsk Metallurgical Institute

"Alloy Element Waste in High-Speed Steel Melts"

Moscow, Metallurg., No 5, May 70, pp 22-24

Abstract: The alloying of high-speed steel in electric-arc furnaces is accompanied by substantial losses of such alloying elements as tungsten, vanadium, and chromium. The purpose of this article is to clarify the basic causes of increasing losses in tungsten and other alloying elements during the electric-arc process. In the course of this study, a statistical analysis was made of 479 alloys of R18, R12, and R9 steel at an unidentified plant in 1968. The melts were made in furnaces with capacities of 7.5 and 17.5 tons. The R18 steel contained 50% high-speed steel scrap and the required quantity of ferrotungsten; the R12

1/2

APPROVED FOR RELEASE: 08/09/2001 CIA-RDP86-00513R002202330003-6"

"APPROVED FOR RELEASE: 08/09/2001 CIA-RDP86-00513R002202330003-6

USSR

CHUYKO, N. M., et al., Metallurg., No 5, May 70, pp 22-24

and R9 steels were obtained by remelting the scrap. The statistics showed that the tungsten loss was from 8 to 13%, the vanadium loss 18-28%, and the chromium loss about 13%. An accompanying table shows the losses for each element in percentage, kilograms per meter, and rubles per meter for the three steel types. There is also a table giving the results of R18 smelting in a 7.5-ton capacity arc furnace. Finally, there are three curves showing the loss of tungsten in alloying R18 steel as a function of the duration of the smelting period, of the time of year, and of the duration of R18 scrap remelting.

2/2

APPROVED FOR RELEASE: 08/09/2001 CIA-RDP86-00513R002202330003-6"

"APPROVED FOR RELEASE: 08/09/2001 CIA-RDP86-00513R002202330003-6

1/2 020 UNCLASSIFIED PROCESSING DATE--30OCT70

TITLE--ANTITUMOR ACTIVITY OF NEW PREPARATIONS OF THE CHLORETHYLAMINE GROUP NOT INFLUENCING HAEMOPOESIS -U-

AUTHOR-(05)-VASILYEVA, L.S., DYACHKOVSKAYA, R.F., SCHUPPE, N.O., PARKHOMENKO, I.I., SURKOVA, N.I.

COUNTRY OF INFO--USSR

SOURCE--IZVESITYA AKADEMII NAUK SSSR, SERIYA BIOLOGICHESKAYA, 1970, NR 3, PP 459-463

DATE PUBLISHED--------70

SUBJECT AREAS--BIOLOGICAL AND MEDICAL SCIENCES

TOPIC TAGS--ANTITUMOR DRUG EFFECT, HEMATOPOIESIS, AMINE

CONTROL MARKING--NO RESTRICTIONS

DOCUMENT CLASS--UNCLASSIFIED

PROXY REEL/FRAME--3001/1608 STEP NO--UR/0216/70/000/003/0459/0463

CIRC ACCESSION NO--AP0127099

UNCLASSIFIED

APPROVED FOR RELEASE: 08/09/2001 CIA-RDP86-00513R002202330003-6"

"APPROVED FOR RELEASE: 08/09/2001 CIA-RDP86-00513R002202330003-6

2/2 020 UNCLASSIFIED PROCESSING DATE--30OCT70

CIRC ACCESSICN NO--AP0127099

ABSTRACT/EXTRACT--(U) GP-0- ABSTRACT. ANTITUMOR ACTION OF CHLORALHYDRATES N,N,DI(2,CHLORETHYL)PINOCAMFILAMINE (I), N,N,DI(1,CHLORETHYL)PINILAMINE(II) AND 3,5,DI,TRETBUTYL,4,OXI,N, NI,DI (BETA,DHLORETHYL BENZILAMINE) (III) WAS STUDIED BOTH IN EXPERIMENTS ON ANIMALS AND IN TISSUE CULTURE. IT WAS FOUND THAT THE COMPOUND II DISPLAYED MAXIMAL ACTIVITY. THE INFLUENCE OF THE COMPOUND II ON THE PROCESS OF PROTEIN BIOSYNTHESIS IN TUMOR CELLS WAS REGISTERED. IT WAS FOUND THAT THE SUBSTANCES STUDIED DO NOT INFLUENCE NORMAL HAEMOPOESIS.

FACILITY: INSTITUTE OF CHEMCIAL PHYSICS, ACADEMY OF SCIENCES, USSR.

UNCLASSIFIED

APPROVED FOR RELEASE: 08/09/2001 CIA-RDP86-00513R002202330003-6"

"APPROVED FOR RELEASE: 08/09/2001 CIA-RDP86-00513R002202330003-6

USSR

UDC 577-391

RYAZANOV, V. M., SHIRYAYEV, V. G., PARKHOMENKO, I. M., and KUDRYASHOV, Yu. B., Biophysics Department, Moscow State University

"Role of Phospholipids in Radiation Lesions of Mammals Differing in Radiosensitivity"

Moscow, Vestnik Moskovskogo Universiteta, No 3, 1973, pp 36-41

Abstract: Lipid metabolism and antioxidant activity of phospholipids were studied in various organs of the highly radioresistant Mongolian gerbil Meriones unguiculatus ($LD_{50/30}$ 1180 rad) and much more radiosensitive guinea pig Cavia porcella ($LD_{50/30}$ 190 rad). Both groups of animals were exposed once to whole-body irradiation at 700 r. Irradiation caused a significant decrease in the phospholipid content of the brain, liver, and small intestine within 2 hours. The decrease persisted or intensified thereafter in the guinea pigs but gave way to an increase in the gerbils. Irradiation also altered the composition of the animals' total lipids, increasing the percentage of phospholipids in the gerbils but decreasing it markedly per unit of tissue weight in the guinea pigs. Antioxidant activity of the phospholipids decreased sharply in the guinea pigs but increased in the gerbils. The high degree of resistance to ionizing radiation exhibited by

1/2

APPROVED FOR RELEASE: 08/09/2001 CIA-RDP86-00513R002202330003-6"

"APPROVED FOR RELEASE: 08/09/2001 CIA-RDP86-00513R002202330003-6

USSR

RYAZANOV, V. M., et al., Vestnik Moskovskogo Universiteta, No 3, 1973, pp 36-41

gerbils is attributed to the increased phospholipid content of the liver after exposure and intensified antioxidant activity of the phospholipids. These reactions prevent "intestinal death," which results from the use of 400 to 500 rad in guinea pigs (compared to a dose of 1500 rad or more in gerbils).

2/2

APPROVED FOR RELEASE: 08/09/2001 CIA-RDP86-00513R002202330003-6"

"APPROVED FOR RELEASE: 08/09/2001 CIA-RDP86-00513R002202330003-6

USSR UDC 535.379:576.851.5

DOSKOCH, Ya. Ye., PARKHOMENKO, I. M., BOGDANOVA, N. V., MAZOKHINA, N. N., and TARUSOV, B. N., Moscow State University and All-Union Institute of the Canning and Vegetable-Drying Industries

"Spontaneous and Induced Chemoluminescence of Spores From Thermophilic Microorganisms in Relation to Their Thermostability"

Moscow, Mikrobiologiya, No 5, 1971, pp 849-857

Abstract: Study of spores from the thermophilic strain Bacillus aerothermophilus showed that they do not luminesce spontaneously whether heated or not. However, passage of an electrical current through unheated spore suspensions induced luminescence at a constant level. The intensity was much lower than the luminescence emitted by suspensions heated to 120 to 130°C and the shape of the kinetic curve was much different. The intensity of luminescence was a function of the duration of heating, the maximum occurring after all the spores were killed due to destruction of the spore coat. High temperatures also affected the electrical conductance of the suspensions. In suspensions heated to 120°C the maximum current intensity occurred after 90 minutes, whereas in suspensions heated to 130°C it occurred after 3 minutes, the time when all the spores were killed, i.e., the current intensity varied with the number of dead microorganisms.

1/1

APPROVED FOR RELEASE: 08/09/2001 CIA-RDP86-00513R002202330003-6"

"APPROVED FOR RELEASE: 08/09/2001 CIA-RDP86-00513R002202330003-6

Acc. Nr: AP0044419 Ref. Code: UR 0660

PRIMARY SOURCE: Neyrofiziologiya, 1970, Vol 2, Nr 1, pp 100-106

ON CHARACTERISTIC OF THE SNAIL GIANT NEURONS GENERATING ACTION POTENTIALS IN SODIUM FREE SOLUTIONS

N. T. Parkhomenko

The A. A. Bogomoletz Institute of Physiology, Academy of Sciences, Ukrainian SSR, Kiev

Summary

Ability of the snail giant neurons to produce action potentials in sodium-free solution depends on their input resistance so, that the higher input resistance the better is the manifestation of this ability. Such neurons have, as a rule, low resting potentials and a slow repolarizing phase. The neurons continue to produce action potential for a longer period of time in sodium-free solution when barium ions are substituted for calcium. The rise in the calcium concentration up to 30 mM can restore excitability which fell down in sodium-free solution with 10 mM of calcium. 60 mM calcium concentration results in the fall down of the excitability, which can be restored under these conditions by depolarizing of the neuron by the outward current. The suggestion is made that ability of the neuron surface membrane to utilize the ions of sodium or calcium in the production of the action potential depends on its potassium conductance.

1/1

DI 2

REEL/FRAME
19771039

APPROVED FOR RELEASE: 08/09/2001 CIA-RDP86-00513R002202330003-6"

"APPROVED FOR RELEASE: 08/09/2001 CIA-RDP86-00513R002202330003-6

USSR

UDC 669.127

GESHELIN, V. G., KOVAL'CHUK, G. Z., and PARKHOMENKO, P. A., Institute of Ferrous Metallurgy

"Investigation of the Fatigue Breakdown of Carbon Steel Treated With Ferrocerium"

Kiev, Metallofizika, No 31, 1970, pp 157-160

Translation: Round specimens from industrially melted high-grade carbon steel 30 were tested for fatigue limit under conditions of symmetrical cycle tension -- compression for the purpose of clarifying the effect of cerium additives on the steel's fatigue strength. Ferrocerium was injected when the metal was cast into an ingot mold in terms of 1.5 kg per ton of steel. The effect of the form of nonmetallic inclusions on cracking during fatigue tests was investigated. It is shown that the replacement of nonmetallic inclusions drawn in the direction of rolling after the modification of the steel with cerium with compact, nondeformed inclusions is accompanied by an increase in the steel's fatigue strength. On the basis of laboratory tests made on cable a conclusion was drawn on the possibility of increasing their life by approximately 40% provided the steel is additionally deoxidized with an optimum amount of ferrocerium. Bibliography: 7 entries, illustrations: 4.

1/1

APPROVED FOR RELEASE: 08/09/2001 CIA-RDP86-00513R002202330003-6"

"APPROVED FOR RELEASE: 08/09/2001 CIA-RDP86-00513R002202330003-6

USSR UDC: 8.74

PARKHOMENKO, P. P.

"The Theory of Questionnaires and Problems of Technical Diagnostics"

Tr. IV Vses. soveshch. po avtomat. upr., 1968, Tekhn. sredstva avtomatiki (Works of the Fourth All-Union Conference on Automatic Control, 1968, Technical Facilities for Automation), Moscow, "Nauka", 1971, pp 7-15 (from RZh-Kibernetika, No 4, Apr 72, Abstract No 4V518)

Translation: The properties of optimum questionnaires of general form are studied for the case of identical weights of events, values, and justifications of questions. Rules are presented for converting a given questionnaire into one that is optimum. The simplest questionnaires are those in which the justifications and values of the questionnaires are identical, and the set E is a complete system of events. These questionnaires were studied by Picard. In this paper an investigation is made of questionnaires with nonidentical justifications and identical values of questions, and also questionnaires of general form for which algorithms are given for constructing optimum questionnaires. Problems of coding troubleshooting of technical equipment, synthesizing structures of com-

APPROVED FOR RELEASE: 08/09/2001 CIA-RDP86-00513R002202330003-6"

"APPROVED FOR RELEASE: 08/09/2001 CIA-RDP86-00513R002202330003-6

USSR

UDC: 621.317.799(088.8)

KUPROVICH, V. P., PARKHOMENKO, P. P., KUZNETSOV, V. M., MERENKOV, A. D., TOMFEL'D, D. L., Scientific Research Institute of Machine Building Technology, Institute of Automation and Remote Control (Technical Cybernetics)

"A Device for Automatic Quantitative and Qualitative Monitoring of Electrical and Time Parameters"

USSR Author's Certificate No 264794, filed 27 Dec 67, published 2 Jul 70 (from RZh-Radiotekhnika, No 6, Jun 71, Abstract No 6A327 P)

Translation: A device is proposed for automatic quantitative and qualitative monitoring of electrical and time parameters. As a distinguishing feature of the patent, in order to reduce time and increase accuracy in localizing trouble spots in cable conductors, the device contains a trouble localizing unit in which the control input of the shift register is connected to the output of the data processing module, while the signal and control outputs of the shift register are connected to the control inputs of the block of output devices and the commutation module respectively. The control inputs of the switches of each of the cells of the high-voltage commutation circuits are connected to the outputs of a two-position storage element whose input is connected to the output of the commutation module through the commutation leads of one of the switches.

1/1

APPROVED FOR RELEASE: 08/09/2001 CIA-RDP86-00513R002202330003-6"

"APPROVED FOR RELEASE: 08/09/2001 CIA-RDP86-00513R002202330003-6

Nitrogen Compounds

USSR

UDC 547.214.39

LAPSHIN, N. M., PARKHOMENKO, T. N., and LUZIN, A. S.

"Chemistry of Nitrogen Ylides. III. Reaction of Quaternary Ammonium Salts of tert-Butyl Hydroperoxides With Esters"

Leningrad, Zhurnal Organicheskoy Khimii, Vol 8, No 8, Aug 72, pp 1599-1601

Abstract: Complex esters react energetically with quaternary ammonium salts of tert-butyl hydroperoxides. Using the example of ethyl acetate and methylmetacrylate, it has been shown that a complex condensation of the esters takes place upon initiation by the base. However, it was not possible to isolate the condensation products. They break down to the acetic acid and metacrylic acid; their quaternary ammonium salts having been isolated from the reaction mixture. During the reaction quaternary ammonium salts of acetic and methacrylic acids were partially converted to respective substituted amides. The double bond of the methyl methacrylate remained untouched.

1/1

APPROVED FOR RELEASE: 08/09/2001 CIA-RDP86-00513R002202330003-6"

"APPROVED FOR RELEASE: 08/09/2001 CIA-RDP86-00513R002202330003-6

1/2 055 UNCLASSIFIED PROCESSING DATE--04DEC70

TITLE--OXIDATION OF ATMOSPHERIC NITROGEN IN A PLASMA -U-

AUTHOR-(03)-GANZ, S.N., PARKHOMENKO, V.D., RUDENKO, A.I.

COUNTRY OF INFO--USSR

P

SOURCE--KHIM. UKR. 1970, (2), 24-6

DATE PUBLISHED--------70

SUBJECT AREAS--PHYSICS

TOPIC TAGS--OXIDATION, NITROGEN OXIDE, ELECTRODE, GAS FLOW, FLOW RATE, PLASMA PHYSICS

CONTROL MARKING--NO RESTRICTIONS

DOCUMENT CLASS--UNCLASSIFIED

PROXY REEL/FRAME--3008/0471 STEP NO--UR/0436/70/000/002/0024/0026

CIRC ACCESSION NO--AP0137562

UNCLASSIFIED

APPROVED FOR RELEASE: 08/09/2001 CIA-RDP86-00513R002202330003-6"

"APPROVED FOR RELEASE: 08/09/2001 CIA-RDP86-00513R002202330003-6

2/2 055 UNCLASSIFIED PROCESSING DATE--04DEC70

CIRC ACCESSION NO--AP0137562

ABSTRACT/EXTRACT--(U) GP-0- ABSTRACT. THE EFFECT WAS STUDIED OF THE FOLLOWING ON THE DIRECT OXION. OF ATM. N IN A PLASMA: GAS FLOW RATE, DISTANCE BETWEEN THE ELECTRODES WHICH FORM THE D.C. ARC, THE GEOMETRIC FORM AND DIMENSIONS OF THE PLASMOTRON REACTION CHAMBER. THE APP. IS DESCRIBED. FROM THE ANALYSIS OF THE EXPTL. DATA, THE CONSUMPTION OF ELEC. ENERGY, PER TON OF NO, IS ABOUT HALF OF THAT OF THE BEST PLANTS.

FACILITY: DNEPROPETROVSK. KHIM.-TEKHNOL. INST., DNEPROPETROVSK, USSR.

UNCLASSIFIED

APPROVED FOR RELEASE: 08/09/2001 CIA-RDP86-00513R002202330003-6"

"APPROVED FOR RELEASE: 08/09/2001 CIA-RDP86-00513R002202330003-6

1/2 025 UNCLASSIFIED PROCESSING DATE--11SEP70

TITLE--SYNTHESIS OF HYDROGEN CYANIDE AND ACETYLENE IN A NITROGEN PLASMA -U-

AUTHOR--KRASNOKUTSKIY, YU.I., GANZ, S.N., PARKHOMENKO, V.D.

COUNTRY OF INFO--USSR

SOURCE--KHIM. PROM. (MOSCOW) 1970, 46(1) 33-5

DATE PUBLISHED--------70

SUBJECT AREAS--CHEMISTRY, PHYSICS

TOPIC TAGS--HYDROGEN CYANIDE, ACETYLENE, NITROGEN, PLASMA TEMPERATURE, HIGH TEMPERATURE EFFECT, METHANE, CALCULATION, CHEMICAL PRODUCT PRODUCTION

CONTROL MARKING--NO RESTRICTIONS

DOCUMENT CLASS--UNCLASSIFIED

PROXY REEL/FRAME--1985/1454 STEP NO--UR/0064/70/046/001/0033/0035

CIRC ACCESSION NO--AP0101540

UNCLASSIFIED

APPROVED FOR RELEASE: 08/09/2001 CIA-RDP86-00513R002202330003-6"

"APPROVED FOR RELEASE: 08/09/2001 CIA-RDP86-00513R002202330003-6

2/2 025 UNCLASSIFIED

CIRC ACCESSION NO--AP0101540 PROCESSING DATE--11SEP70

ABSTRACT/EXTRACT--(U) GP-0- ABSTRACT. IN THE REACTION BETWEEN CH SUB4 AND N SUB2 IN A HIGH TEMP. N PLASMA, THE YIELD OF HCN INCREASED CONTINUOUSLY WITH INCREASING TEMP. AND WAS SIMILAR TO 13 TO 14PERCENT AT 3000DEGREESK AND AT N SUB2: CH SUB4 RATIOS OF (0.5 TO 3.0):1. THE YIELD OF C SUB2 H SUB2 FIRST INCREASED AND THEN DECREASED WITH INCREASING TEMP., WITH A MAX. AT SIMILAR TO 2000 DEGREESK; THE YIELD OF C SUB2 H SUB2 WAS AN IRREGULAR FUNCTION OF N SUB2: CH SUB4 RATIO, E.G., AT N SUB2: CH SUB4 RATIOS OF 0.5:1, 1:1, AND 3:1 THE MAX. YIELDS WERE 14, 4, AND 10PERCENT, RESP. CALCNS. SHOW THAT AT 4200DEGREESK THE YIELD OF HCN SHOULD REACH 25PERCENT.

UNCLASSIFIED

APPROVED FOR RELEASE: 08/09/2001 CIA-RDP86-00513R002202330003-6"

"APPROVED FOR RELEASE: 08/09/2001 CIA-RDP86-00513R002202330003-6

USSR

NOVOTOROV, A. S., KRUGLITSKIY, N. N., TRETINNIK, V. Yu., PARKHOMENKO, V. V., BELIK, F. A.

"Determination of the Specific Surface of Humates by the Gas-Chromatographic Method"

Khim. Tekhnologiya. Nauch.-proyizv. sb. [Chemical Technology. Scientific and Production Collection], No 2(56), 1971, pp 44-46 (Translated from Referativnyy Zhurnal, Khimiya, No 3, 1972, Abstract No 3 B1495).

Translation: A gas chromatic installation for determination of the surfaces of solids, mounted on a type LKhM-8M chromatograph, is used to study the adsorption of humic acids and humates of nitrogen and argon. The adsorption measurements are used to calculate the specific surfaces of the humic acids and humates.

1/1

APPROVED FOR RELEASE: 08/09/2001 CIA-RDP86-00513R002202330003-6"

"APPROVED FOR RELEASE: 08/09/2001 CIA-RDP86-00513R002202330003-6

USSR

UDC 577.1:615.5:612.8.015

PARKHOMETS', P. K., PALLADIN, A. V., and KOCHERGA, V. Y., Institute of Biochemistry, Academy of Sciences Ukrainian SSR, Kiev

"Effect of Melipramine on Serotonin Uptake by Animal Brain Tissue"

Kiev, Ukrayins'kyy Biokhimichnyy Zhurnal, Vol 42, No 6, 1970, pp 687-691

Abstract: The effect of melipramine on serotonin uptake by rat and rabbit brain tissue was studied in vivo and in vitro. Male albino rats weighing 160-200 g and rabbits weighing 1-1.5 kg were used. The rabbits were given an intraperitoneal injection of 50 mg/kg of melipramine, as well as an intracisternal injection of 100 mcg/kg of serotonin 4 hours 30 minutes before sacrifice. The rats were given 50 mg/kg of melipramine 4 hours before sacrifice and 20 mg/kg of serotonin 30, 60 and 90 minutes afterwards by intraperitoneal administration. The results of the in vitro studies indicate that melipramine inhibits the uptake of exogenous serotonin by the fraction of nerve endings and

1/2

APPROVED FOR RELEASE: 08/09/2001 CIA-RDP86-00513R002202330003-6"

"APPROVED FOR RELEASE: 08/09/2001 CIA-RDP86-00513R002202330003-6

USSR

PARKHOMETS', P. K., et al., Ukrayins'kyy Biokhimichnyy Zhurnal, Vol 42, No 6, 1970, pp 687-691

synaptic vesicles, as well inhibiting the liberation of serotonin from the fraction of nerve endings during incubation of the latter in a physiological medium. The results of the in vivo studies also indicate the possible inhibitory effect of melipramine on exogenous serotonin uptake by brain tissue. It is suggested that melipramine may inhibit the penetration of the nerve ending membranes by serotonin.

2/2

APPROVED FOR RELEASE: 08/09/2001 CIA-RDP86-00513R002202330003-6"

"APPROVED FOR RELEASE: 08/09/2001 CIA-RDP86-00513R002202330003-6

1/2 017 UNCLASSIFIED PROCESSING DATE--30OCT70

TITLE--EFFECT OF DOSATED PHYSICAL EXERCISE ON MYOCARDIAL FUNCTION IN CORONARY INSUFFICIENCY IN PATIENTS OF DIFFERENT AGE -U-

AUTHOR-(03)-SAKHARCHUK, I.I., ZAPESOCHNYY, A.Z., PARKHOTIK, I.I.

COUNTRY OF INFO--USSR

SOURCE--VRACHEBNOYE DELO, 1970, NR 4, PP 55-58

DATE PUBLISHED--------70

SUBJECT AREAS--BIOLOGICAL AND MEDICAL SCIENCES

TOPIC TAGS--HEART DISEASE, EXERCISE, CORONARY BLOOD CIRCULATION, CARDIOVASCULAR SYSTEM

CONTROL MARKING--NO RESTRICTIONS

DOCUMENT CLASS--UNCLASSIFIED

PROXY REEL/FRAME--3001/1956 STEP NO--UR/0475/70/000/004/0055/0058

CIRC ACCESSION NO--AP0127357

UNCLASSIFIED

APPROVED FOR RELEASE: 08/09/2001 CIA-RDP86-00513R002202330003-6"

"APPROVED FOR RELEASE: 08/09/2001 CIA-RDP86-00513R002202330003-6

2/2 017 UNCLASSIFIED PROCESSING DATE--30OCT7(

CIRC ACCESSION NO--AP0127357

ABSTRACT/EXTRACT--(U) GP-0- ABSTRACT. A STUDY OF 82 PATIENTS WITH MYOCARDIAL INFARCTION AND POSTINFARCTION CARDIOSCLEROSIS INDICATES THAT ADEQUATELY CHOSEN AND DOSATED PHYSICAL EXERCISE EXERTS A FAVOURABLE EFFECT ON THE CORONARY BLOOD CIRCULATION AND CONTRACTILE CAPACITY OF THE MYOCARDIUM. TIMING OF EXERCISE THERAPY AND TOTAL DOSE OF PHYSICAL LOADS SHOULD BE STRICTLY INDIVIDUAL DEPENDING ON THE CLINICAL PICTURE AND PERIOD OF INFARCTION. THE RESPONSE OF THE CARDIOVASCULAR SYSTEM TO PHYSICAL LOADS SHOULD BE REGULARLY CONTROLLED BY MEANS OF FUNCTIONAL TESTS.

UNCLASSIFIED

APPROVED FOR RELEASE: 08/09/2001 CIA-RDP86-00513R002202330003-6"

"APPROVED FOR RELEASE: 08/09/2001 CIA-RDP86-00513R002202330003-6

1/2 031 UNCLASSIFIED PROCESSING DATE--11SEP70

TITLE--CHANGES OF THE ELECTRICAL ACTIVITY OF THE MYOCARDIUM DEPENDING ON THE AGE OF PATIENTS WITH CHRONIC CORONARY INSUFFICIENCY -U-

AUTHOR--SAKHARCHUK, I.I., PARKHOTIK, I.I.

COUNTRY OF INFO--USSR

SOURCE--VRACHEBNOYE DELO, 1970, NR 3, PP 97-99

DATE PUBLISHED--------70

SUBJECT AREAS--BIOLOGICAL AND MEDICAL SCIENCES

TOPIC TAGS--MYOCARDIUM, ELECTROPHYSIOLOGY, ELECTROCARDIOGRAPHY, GERIATRICS, ATHEROSCLEROSIS, HEART DISEASE

CONTROL MARKING--NO RESTRICTIONS

DOCUMENT CLASS--UNCLASSIFIED

PROXY REEL/FRAME--1986/0958 STEP NO--UR/0475/70/000/003/0097/0099

CIRC ACCESSION NO--AP0102897

UNCLASSIFIED

APPROVED FOR RELEASE: 08/09/2001 CIA-RDP86-00513R002202330003-6"

"APPROVED FOR RELEASE: 08/09/2001 CIA-RDP86-00513R002202330003-6

2/2 031 UNCLASSIFIED PROCESSING DATE--11SEP70

CIRC ACCESSION NO--AP0102897

ABSTRACT/EXTRACT--(U) GP-0- ABSTRACT. ELDERLY AND OLD PATIENTS WITH CHRONIC CORONARY INSUFFICIENCY SHOW A REDUCED FUNCTION OF THE SINUS AND ATRIOVENTRICULAR NODES AND A REDUCED CONTRACTILE CAPACITY OF THE MIOCARDIUM. WITH AGE THESE PATIENTS SHOW CHANGES OF CARDIAC SENSIBILITY TO THE EFFECT OF NEURAL AND HUMORAL STIMULATORS. ECG DISORDERS ARE MORE MARKED IN ELDERLY PATIENTS WITH CORONARY SCLEROSIS THAN IN AVERAGE AGED AND SENILE PATIENTS. THE ELECTRICAL ACTIVITY AND MYOCARDIAL FUNCTION LARGELY DEPEND ON THE DEVELOPMENT OF COLLATERAL CIRCULATION WHICH IS BETTER DEVELOPED IN SENILE PATIENTS WITH STENOSING CORONARY ATHEROSCLEROSIS THAN IN ELDERLY PATIENTS.

UNCLASSIFIED

APPROVED FOR RELEASE: 08/09/2001 CIA-RDP86-00513R002202330003-6"

"APPROVED FOR RELEASE: 08/09/2001 CIA-RDP86-00513R002202330003-6

Acc. Nr: AP0047199 Ref. Code: UR0504

PRIMARY SOURCE: Terapevticheskiy Arkhiv, 1970, Vol 42, Nr 1, pp 27-31

PECULIARITIES OF THE CHANGES OF THE FUNCTIONAL AND ELECTROLYTIC CAPACITY OF THE MYOCARDIUM IN AGED AND SENILE PATIENTS IN VARIOUS FORMS OF CORONARY INSUFFICIENCY

I. I. Parkhotik

Summary

The authors studied the indeces of electro-, ballisto-, phono- and polycardiograms depending upon the age in 427 patients with chronic coronary insufficiency (I, II, III degree) and in 358 patients with acute disorders of coronary circulation. The age of the patients was from 30 to 85 years old. In 780 patients the author followed up the shifts of cardiographic indices in dynamics over a period of 7—12 years. The results of investigation of 320 practically healthy individuals of the mentioned age served as control. In aged and senile patients the functional mobility of the sinusoid and atrioventricular nodes and the contractile ability of the cardiac muscle were decreased. Considerable disorder of the cardiographic indices in aged and senile patients is explained by the combination of changes due to the age and those caused by atherosclerotic coronarocardiosclerosis.

1/2

REEL/FRAME
19790698

2

APPROVED FOR RELEASE: 08/09/2001 CIA-RDP86-00513R002202330003-6"

"APPROVED FOR RELEASE: 08/09/2001 CIA-RDP86-00513R002202330003-6

AP0047199

The electromechanical activity of the heart in many respects depends upon the degree of the development of the collateral blood circulation which in stenosing atherosclerosis of the coronary arteries was more developed in aged patients than in senile ones. After 60 in 39—56% patients with chronic coronary insufficiency there was seen improvement of the previously changed functional electrocardiographic indices which occurred owing to the development of collateral blood circulation and some improvement of the adaptational potentials of the heart.

2/2

19790699

APPROVED FOR RELEASE: 08/09/2001 CIA-RDP86-00513R002202330003-6"

"APPROVED FOR RELEASE: 08/09/2001 CIA-RDP86-00513R002202330003-6

USSR

UDC 669.017:548.5

PARKHUTIK, P. A., LUBENSKIY, M. Z.

"Influence of Composition and Cooling Conditions on Kinetics of Crystallization of Metal Alloys"

Izv. AN BSSR, Ser. Fiz-tekhn. Nauk, No 2, Minsk, 1971, pp 57-65.

Abstract: The crystallization of binary Al-Cu and Al-Si alloys was studied in a broad range of concentrations with five different cooling modes. The cooling curves are used to determine the time of primary and eutectic crystallization, and the dependence of cooling rate on composition is constructed. It is demonstrated that with identical cooling conditions, the kinetics of crystallization of the alloys changes with changing crystallization temperature interval. When the alloys solidified over a temperature range, the cooling curves show a clearly expressed liquidus plateau in the initial stage of crystallization, which is explained by the high rate of crystallization in the initial stages of the process with intensive heat liberation. The kinetics of crystallization of eutectic alloys depends on composition: with otherwise equivalent conditions, the cooling rate is greatest for pure metals, decreases with alloying and increasing crystallization range, passes through a minimum and then increases, reaching a maximum at the eutectic concentration.

1/1

APPROVED FOR RELEASE: 08/09/2001 CIA-RDP86-00513R002202330003-6"

"APPROVED FOR RELEASE: 08/09/2001 CIA-RDP86-00513R002202330003-6

USSR

UDC 669.715.017.12.018.29:539.531+620.186

PARKHUTIK, P. A., and LUBENSKIY, M. Z., (Physico-Technical Institute, Academy of Sciences, BSSR)

"Effect of Composition and Conditions of Crystallization on the Structure and Hardness of Binary Aluminum-Copper and Aluminum-Silicon Alloys"

Izv. AN BSSR. Ser. fiz-tekhn. n. (Bulletin of the Academy of Sciences, Belorussian Soviet Socialist Republic, Series Physico-Technical Sciences), 1971. No 1, pp 38-45 (from Referativnyy Zhurnal -- Metallurgiya, No 6, Jun 71, Abstract No 6I629)

Translation of Abstract: The HB and microstructure of binary alloys of Al-Cu and Al-Si alloys were studied over a wide range of concentrations (0-40% Cu and 0-20% Si) under casting and processing conditions, involving crystallization from five different systems of cold casting in metal and earthen forms. With increasing amounts of the second component, the rate of increase of hardness of the alloy differs in different parts of the composition diagrams. The difference in hardness of rapidly and slowly cooled melts increases with increasing amount of the second component. Homogenizing annealing levels the properties of the 2-phase alloys and strongly decreases its hardening. An explanation is given for the calculation of the analysis of the microstructure.

1/2

APPROVED FOR RELEASE: 08/09/2001 CIA-RDP86-00513R002202330003-6"

"APPROVED FOR RELEASE: 08/09/2001 CIA-RDP86-00513R002202330003-6

USSR

PARKHUTIK, P. A., and LUBENSKIY, M. Z., Izv. AN BSSR. Ser. fiz-tekhn. n., 1971, No 1, pp 38-45 (from Referativnyy Zhurnal -- Metallurgiya, No 6, Jun 71, Abstract No 6I629)

(Seven illustrations; nine bibliographic entries)

2/2

APPROVED FOR RELEASE: 08/09/2001 CIA-RDP86-00513R002202330003-6"

"APPROVED FOR RELEASE: 08/09/2001 CIA-RDP86-00513R002202330003-6

Aluminum and Its Alloys

USSR

UDC 669.017

PARKHUTIK, P. A., and LUBENSKIY, M. Z., Physico Technical Institute, Academy of Sciences Belorussian SSR

"Dependence of the Microhardness of Structural Constituents on the Composition and Rate of Solidification of Cast Aluminum Alloys"

Minsk, Akademiya Nauk BSSR, Izvestiya, Seriya Fiziko-Tekhnicheskikh Nauk, No 2, 1970, pp 33-38

Translation: A study was made of the microhardness of primary crystals and of the eutectic of binary Al-Cu and Al-Si cast and heat treated alloys in a wide range of concentration (0 - 40% Cu and 0 - 20% Si), produced under different conditions of crystallization (cast in metal and loam molds). It was confirmed that in the cast state the microhardness of crystals of α-solid solution of alloys of both systems continuously increases with the increase in content of the second component in the single-phase as well as in the double-phase region in the presence of the eutectic. The acceleration of the rate of quenching results in an increase of the microhardness of the solid solution. The obtained data attests to the intensification of the degree of intradendrite microheterogenization of the crystals of the solid

1/2

APPROVED FOR RELEASE: 08/09/2001 CIA-RDP86-00513R002202330003-6"

"APPROVED FOR RELEASE: 08/09/2001 CIA-RDP86-00513R002202330003-6

Aluminum and Its Alloys

USSR

UDC 669.017

PARKHUTIK, P. A., and LUBENSKIY, M. Z., Physico Technical Institute, Academy of Sciences Belorussian SSR

"Dependence of the Microhardness of Structural Constituents on the Composition and Rate of Solidification of Cast Aluminum Alloys"

Minsk, Akademiya Nauk BSSR, Izvestiya, Seriya Fiziko-Tekhnicheskikh Nauk, No 2, 1970, pp 33-38

Translation: A study was made of the microhardness of primary crystals and of the eutectic of binary Al-Cu and Al-Si cast and heat treated alloys in a wide range of concentration (0 - 40% Cu and 0 - 20% Si), produced under different conditions of crystallization (cast in metal and loam molds). It was confirmed that in the cast state the microhardness of crystals of α-solid solution of alloys of both systems continuously increases with the increase in content of the second component in the single-phase as well as in the double-phase region in the presence of the eutectic. The acceleration of the rate of quenching results in an increase of the microhardness of the solid solution. The obtained data attests to the intensification of the degree of intradendrite microheterogenization of the crystals of the solid

1/2

APPROVED FOR RELEASE: 08/09/2001 CIA-RDP86-00513R002202330003-6"

"APPROVED FOR RELEASE: 08/09/2001 CIA-RDP86-00513R002202330003-6

USSR

UDC 669.017

PARKHUTIK, P. A., and LUBENSKIY, M. Z., Physicotechnical Institute, Academy of Sciences, BSSR

"The Influence of the Composition and of the Crystallization Conditions On the Structure and Hardness of Binary Aluminum-Copper and Aluminum-Silicon Alloys"

Minsk, Izvestiya Akademii Nauk BSSR, Seriya Fiziko-Tekhnicheskikh Nauk, No 1, 1971, pp 38-45

Abstract: The Brinell hardness and the microstructure of binary Al-Cu and Al-Si alloys in a high range of concentrations (0-40% Cu and 0-20% Si) was studied in a cast state, and in a heat-treated state, crystallized at five different cooling regimes by pouring into metal and earth molds. It is shown that as the content of the second component increases, the rate of hardness increase of the alloys is different at various sectors of the diagram of state. The rate of crystallization exerts a considerable influence on the strengthening and the structure of tha lloys. The difference in the hardness of rapidly and slowly cooled alloys increases as the content of the second component is increased. Homogenizing annealing evens out the properties of

1/2

APPROVED FOR RELEASE: 08/09/2001 CIA-RDP86-00513R002202330003-6"

"APPROVED FOR RELEASE: 08/09/2001 CIA-RDP86-00513R002202330003-6

USSR

PARKHUTIK, P. A., and LUBENSKIY, M. Z., Izvestiya Akademii Nauk BSSR, Seriya Fiziko-Tekhnicheskikh Nauk, No 1, 1971, pp 38-45

two-phased alloys and greatly decreases their hardening periods. The obtained rules governing changes of hardness in accordance with the composition and the rate of cooling are explained with account taken of analysis of the microstructures. Seven figures, 8 bibliographic entries.

2/2

APPROVED FOR RELEASE: 08/09/2001 CIA-RDP86-00513R002202330003-6"

"APPROVED FOR RELEASE: 08/09/2001 CIA-RDP86-00513R002202330003-6

USSR UDC 669.715.620.1

PARKHUTIK, P. A., SELEZNEV, L. P., LUBENSKIY, M. Z., and DUDETSKAYA, L. R.

"Effect of Zinc and Magnesium on the Mechanical Properties of AllOV Alloy"

Moscow, Tsvetnyye Metally, No 12, Dec 70, pp 52-55

Abstract: Impurities in the AllOV include zinc, with a maximum GOST-permissible content of 0.6%. Such a rigid limitation reduces the potential use of waste and scrap in producing secondary aluminum alloys, thus requiring an additional expenditure of primary aluminum or very costly vacuum equipment for dezincification, involving high power consumption. A basic component in the AllOV alloy is magnesium which, when combined with zinc, forms a number of chemical compounds. A magnesium content within 0.2-0.5% is readily controllable under production conditions. Earlier studies have shown that 0.15-0.35% Mg additions to AllOV alloy increase its strength and hardness and decrease plasticity. This study attempts to determine the combined effect of both zinc (0.0-3.0%) and magnesium (0.0-0.5%)

APPROVED FOR RELEASE: 08/09/2001 CIA-RDP86-00513R002202330003-6"

"APPROVED FOR RELEASE: 08/09/2001 CIA-RDP86-00513R002202330003-6

USSR

PARKHUTIK, P. A., et al., Tsvetnyye Metally, No 12, Dec 70, pp 52-55

on the mechanical properties and plasticity of AllOV alloy. The material was melted under flux consisting of equal amounts of NaCl and KCl. Zinc metal was introduced after melting at 730-740° C. The alloy was refined with $MnCl_2$ at 0.1% and was poured at 720-730° C. The experimental data show that extending the limit for zinc in AllOV alloy to 1.4% is fully permissible and that such additions have no adverse effects on the hardness, strength, and plasticity of the alloy.

2/2

APPROVED FOR RELEASE: 08/09/2001 CIA-RDP86-00513R002202330003-6"

"APPROVED FOR RELEASE: 08/09/2001 CIA-RDP86-00513R002202330003-6

USSR

UDC 621.923.76

PARLAPANSKI, M., Higher Institute of Chemical Technology, Sofia, Bulgaria

"Corrosion Resistance of Electrically Polished Metals"

Moscow, Zashchita Metallov, Vol 6, No 2, Mar-Apr 70, pp 162-165

Abstract: Reference data on the effect of electropolishing on the resistance of aluminum, stainless steels, and other metals in aggressive media are discussed. It has been noted that electropolishing of metals in most cases increases their corrosion resistance. The negative effect of electropolishing was observed only in some cases. No well-founded explanation of this phenomenon is given. With the exception of the corrosion of aluminum and some stainless steel grades which were studied in greater detail, the corrosion of most investigated metals has not been systematized.

1/1

APPROVED FOR RELEASE: 08/09/2001 CIA-RDP86-00513R002202330003-6"

"APPROVED FOR RELEASE: 08/09/2001 CIA-RDP86-00513R002202330003-6

USSR

UDC 612.1-06:612.865/.867

NAVAKATIKYAN, A. O., KUNDIYEV, Yu. I., LYSINA, G. G., TOMASHEVSKAYA, L. I., DERKACH, V. S., KAPSHUK, A. P., KOVALEVA, A. I., STANISLAVSKAYA, TS. D., OSINSKAYA, L. S., and PARLYUK, A. F., Kiev Institute of Industrial Hygiene and Occupational Diseases

(6)

"Effect of Mental Work Accompanied by Nervous and Emotional Stress of Varying Degrees on the Cardiovascular System"

Moscow, Kardiologiya, No 3, 1973, pp 50-56

Abstract: In addition to making a statistical analysis of 1,585 cases of myocardial infarction among Kiev workers, the authors ran physiological studies on engineers, typesetters, mathematicians, and neurosurgeons. They found that the effects of mental work on the cardiovascular system vary with the degree of nervous tension and some other factors. The manifestations range from incipient functional disturbances of regulation to severe pathology. Moderate tension elevates blood pressure, the increase in systolic and diastolic pressures being related. Great tension, however, tends to disrupt the relationship probably because the centers regulating vascular tonus become uncoordinated. Intense nervous and emotional strain increases the heart beat as well as the "slow" waves among the periodic constituents of the correlation function of

1/2

APPROVED FOR RELEASE: 08/09/2001 CIA-RDP86-00513R002202330003-6"

"APPROVED FOR RELEASE: 08/09/2001 CIA-RDP86-00513R002202330003-6

USSR

(6)

NAVAKATIKYAN, A. O., et al., Kardiologiya, No 3, 1973, pp 50-56

the cardiac rhythm, an indication of an intensification of central neuroendocrine influences on cardiac activity. As the tempo of work and degree of emotional stress increase, the amount of catecholamines and 17-hydroxycorticoids excreted with urine also gradually increases. Thus, tense mental work markedly affects the cardiovascular system. The resulting changes correlate with the functions of the sympathico-adrenalin system and adrenal cortex.

2/2

APPROVED FOR RELEASE: 08/09/2001 CIA-RDP86-00513R002202330003-6"

"APPROVED FOR RELEASE: 08/09/2001 CIA-RDP86-00513R002202330003-6

USSR

UDC 612.286+612.819.2]-616-057

PARLYUK, A. F., Kiev Scientific Research Institute of Labor Hygiene and Occupational Diseases

"State of the Vestibular and Visual Analysor in Female Bridge Crane Operators"

Kiev, Vrachebnoye Delo, No 7, Jul 70, pp 122-126

Abstract: Vestibular and visual function was studied in 57 female bridge crane operators suffering from vibration-induced neurocirculatory disorders. Symptoms included vertigo, unsteady gait, motion sickness when traveling on buses or trolleys, and uncoordinated movements. Vestibular and visual disorders often preceded the appearance of the characteristic symptoms of vibration sickness. Vestibular function (determined from nystagmic reactions to the caloric test and rotation in a Bárány chair) was characterized by biphase changes, initial excitability later giving way to inhibition of the vestibular apparatus. Impaired visual function was characterized by a narrowing of the field of vision, the degree varying with the length of time the individual had worked at the job. The vestibular and visual disorders noted are ascribed to pathological changes in the peripheral and central portions of the respective analysers caused by disturbances of cerebral circulation.

1/1

APPROVED FOR RELEASE: 08/09/2001 CIA-RDP86-00513R002202330003-6"

"APPROVED FOR RELEASE: 08/09/2001 CIA-RDP86-00513R002202330003-6

USSR

UDC: 621.382.333.33.004.14

BELOVA, G. F., PARMENOV, Yu. A.

"Investigation of Coupling Between Elements of a Neuristor Line Based on p-n-p-n Structures"

Moscow, Radiotekhnika i Elektronika, Vol 17, No 11, Nov 72, pp 2399-2402

Abstract: A relation is found for the maximum distance between elements of a neuristor line at which operation of the line is still possible as a function of the current flowing through the triggering p-n-p-n structure. It is found that theoretical calculations for currents through the trigger element greater than 0.3 mA give maximum spacings which are lower than the experimentally observed spacings at which line operation is still possible. This is attributed to the two-dimensional nature of current flow in an actual line. When designing neuristor lines, the spacing between elements should be taken as 25-50% of the maximum to prevent signal fading in case of failure of one of the line elements.

1/1

APPROVED FOR RELEASE: 08/09/2001 CIA-RDP86-00513R002202330003-6"

"APPROVED FOR RELEASE: 08/09/2001 CIA-RDP86-00513R002202330003-6

USSR

KUZ'MIN, V.A., PARMENOV, YU.A.

UDC 621.382.333.34

"Analysis Of The Voltampere Characteristic Of A Thyristor In An On State"

V sb. Poluprovodn. pribory i ikh primeneniye (Semiconductor Devices And Their Application--Collection Of Works), Issue 24, Moscow, "Sov.radio," 1970, pp 111-125 (from RZh--Elektronika i yeye primeneniye, No 4, April 1971, Abstract No 4B285)

Translation: Analysis and plotting of the voltampere characteristic of a thyristor in an on state for saturated and unsaturated regimes are conducted on the basis of a numerical solution of a nonlinear continuity equation with an arbitrary injection level. 7 ill. 15 ref. Summary.

1/1

APPROVED FOR RELEASE: 08/09/2001 CIA-RDP86-00513R002202330003-6"

"APPROVED FOR RELEASE: 08/09/2001 CIA-RDP86-00513R002202330003-6

Oncology

USSR UDC 616-006.6-092-07:616-008.931

RAPOPORT, I. A., [redacted], and LEVINA, D. M., Division of Chemical Genetics, Institute of Chemical Physics, Academy of Sciences USSR, and Laboratory of Oncogenic Viruses, Institute of Experimental and Clinical Oncology, Moscow

"Enzymatic Control of the Plasticity of the Organism and Carcinogenesis"

Moscow, Patologicheskaya Fiziologiya i Eksperimental'naya Terapiya, Vol 14, No 5, Sep/Oct 70, pp 56-61

Abstract: Most spontaneous and induced tumors are thought to be produced by enzymatic modifications which produce cell transformations. Daughter cells may differ from their parent cells as a result of shifts in chromosomes, or for other reasons such as the effects of chemical carcinogens or shortwave radiation. Apparent "heredity" is created for many generations of malignant cells, since the controlling enzymatic modification involves the key enzyme regulating cellular reproduction. The absence of this enzyme does not lead to the death of the cell but rather to a steady disturbance in cellular multiplication and to interference with other interrelated processes of cellular life activity. The entire set of pathological properties creating the malignancy is thus upon cell division, transmitted to the corresponding daughter cells.

1/1

APPROVED FOR RELEASE: 08/09/2001 CIA-RDP86-00513R002202330003-6"

"APPROVED FOR RELEASE: 08/09/2001 CIA-RDP86-00513R002202330003-6

1/2 011 UNCLASSIFIED PROCESSING DATE--16OCT70

TITLE--CAUSES OF CORRELATION BETWEEN CARCINOGENIC AND MUTAGENIC ACITVITY -U-

AUTHOR-(03)-RAPOPORT, I.A., PARNES, V.A., LEVINA, D.M.

COUNTRY OF INFO--USSR

SOURCE--PATOLOGICHESKAYA FIZIOLOGIYA I EKSPERIMENTAL'NAYA TERAPIYA, 1970, VOL 14, NR 2, PP 23-28

DATE PUBLISHED--------70

SUBJECT AREAS--BIOLOGICAL AND MEDICAL SCIENCES

TOPIC TAGS--TUMOR, CARCINOGEN, MUTAGEN, CELL PHYSIOLOGY

CONTROL MARKING--NO RESTRICTIONS

DOCUMENT CLASS--UNCLASSIFIED

PROXY REEL/FRAME--1988/0058 STEP NO--UR/0396/70/014/002/0023/0028

CIRC ACCESSION NO--AP0105156

UNCLASSIFIED

APPROVED FOR RELEASE: 08/09/2001 CIA-RDP86-00513R002202330003-6"

"APPROVED FOR RELEASE: 08/09/2001 CIA-RDP86-00513R002202330003-6

2/2 011 UNCLASSIFIED PROCESSING DATE--16OCT70

CIRC ACCESSION NO--AP0105156

ABSTRACT/EXTRACT--(U) GP-0- ABSTRACT. ACCEPTANCE OF MUTATION MECHANISM OF TUMOR TRANSFORMATION IS NOT INFREQUENTLY BASED ON CORRELATION BETWEEN THE MUTAGENIC AND CARCINOGENIC EFFECTS. IN STUDYING THE CAUSES OF COINCIDENCE OF THE MUTATION AND CARCIONGENIC ACTIVITY IT WAS OF IMPORTANCE TO FIND OUT WHETHER THE COMPOUNDS BEARERS OF THIS CORRELATION POSSESSED SOME PROPERTY RESPONSIBLE FOR MANIFESTATION OF BOTH EFFECTS, OR NOT. ANALYSIS OF CONDITIONS DETERMINING THE EFFECTUATION OF MUTAGENIC AND CARCINOGENIC ACTION DEMONSTRATED THE PERMEABILITY FACTOR TO BE THE MOST ESSENTIAL. ABOUT THE SAME DEPTH OF PENETRATION OF THE ACTIVE AGENT INTO THE CELLS IS REQUIRED FOR MUTAGENESIS AND CARCINOGENESIS. MUTAGENS POSSESSING A HIGH PENETRATION GRADIENT CAN ALSO, THEREFORE, BE CARCINOGENIC, BUT THE POINT OF APPLICATION OF THESE EFFECTS, APPARENTLY DIFFER. CORRELATION BETWEEN THE CARCINOGENIC AND CARCINOLYTIC ACTIVITY OF A SUBSTANCE IS ALSO CAUSED BY COINCIDENCE OF THE OPTIMAL PENETRATION GRADIENTS. FACILITY: OTDEL KHIMICHESKOY GENETIKI INSTITUTA KHIMICHESKOY FIZIKI AN SSSR. FACILITY: LABORATORIYA ONKOGENNYKH VIRUSOV INSTITUTA EKSPERIMENTAL;NOY I KLINICHESKOY ONKOLOGII AMN SSSR, MOSKVA.

UNCLASSIFIED

APPROVED FOR RELEASE: 08/09/2001 CIA-RDP86-00513R002202330003-6"

"APPROVED FOR RELEASE: 08/09/2001 CIA-RDP86-00513R002202330003-6

Acc. Nr: AP0051933

Ref. Code: UR 0219

PRIMARY SOURCE: Byulleten' Eksperimental'noy Biologii i Meditsiny, 1970, Vol 69, Nr 2, pp 81-84

TRANSPLANTABLE STRAIN OF RAT SARCOMA TW-2357

D. M. Levina, V. A. Parnes

Institute of Experimental and Clinical Oncology of the AMS of the USSR, Moscow

TW-2357 transplantable strain obtained in the tumour of a Wistar rat infected when newborn with the chicken erythroblastosis virus yields 100% of graft "takes" in neonates and in a considerable number of Wistar rattlings, but is not transplantable in mice of the C_{57}, $BLCC_{57}$, W, CC_{57} BR lines. Rats, bearers of the TW-2357 strain tumours, fail to demonstrate the presence of the complement fixing antibody to the group-specific antigen of the leukemia virus. Grafting of live tumour cells and cell-free preparations made therefrom did not elicit the presence of the infectious leukemia virus or of its genoms.

REEL/FRAME
19820416

APPROVED FOR RELEASE: 08/09/2001 CIA-RDP86-00513R002202330003-6"

"APPROVED FOR RELEASE: 08/09/2001 CIA-RDP86-00513R002202330003-6

USSR

UDC 519.2

PARNEV, I. V., PETUKHOV, V. I., SADOVSKIY, G. A.

"Estimating the Errors of Empirical Distribution Laws of Random Processes"

Tr. Ryazan. radiotekhn. in-ta (Works of Ryazan' Radiotechnical Institute), 1971, vyp. 28, pp 248-261 (from RZh-Kibernetika, No 7, Jul 72, Abstract No 7V187)

Translation: Let $x_i = x(i\Delta t)$, $i = 1, \ldots, n$ be successive readings of the stationary ergodic random process $x(t)$ by which it is necessary to construct the estimate of the probability distribution density $w(x)$ of the process $x(t)$. It is proposed that the digitalization step Δt exceeds the correlation radius of the process $x(t)$, and the probability density $w(x)$ is an analytical function which depends on a finite number of parameters: $w(x) = w(x, a_1, \ldots, a_m)$. The estimation error arising a) as a result of the limited nature of the sample and b) as a result of amplitude quantizing of the readings of the process $x(t)$ are investigated separately.

1/1

APPROVED FOR RELEASE: 08/09/2001 CIA-RDP86-00513R002202330003-6"

"APPROVED FOR RELEASE: 08/09/2001 CIA-RDP86-00513R002202330003-6

1/2 024

UNCLASSIFIED

TITLE--LABORATORY CONTROL OF THE USE OF TOXIC CHEMICALS AND METHODS OF IMPROVING THIS CONTROL IN BELORUSSIA -U-

PROCESSING DATE--04DEC70

AUTHOR-(04)-ADAMOVICH, YE.L., BUSLOVICH, S.YU., VYATCHANNIKOV, K.A., PAROMCHIK, YE.I.

COUNTRY OF INFO--USSR

SOURCE--MOSCOW, GIGYENA I SANITARIYA, NO 1, 1970, PP 100-101

DATE PUBLISHED--------70

SUBJECT AREAS--BIOLOGICAL AND MEDICAL SCIENCES

TOPIC TAGS--FOOD ANALYSIS, TOXICITY, CHEMICAL AGENT DECONTAMINATION

CONTROL MARKING--NO RESTRICTIONS

DOCUMENT CLASS--UNCLASSIFIED

PROXY FICHE NO----FD70/605014/D08 STEP NO--UR/0240/70/000/001/0100/0101

CIRC ACCESSION NO--AP0140498

UNCLASSIFIED

APPROVED FOR RELEASE: 08/09/2001 CIA-RDP86-00513R002202330003-6"

"APPROVED FOR RELEASE: 08/09/2001 CIA-RDP86-00513R002202330003-6

2/2 024 UNCLASSIFIED

CIRC ACCESSION NO--AP0140498 PROCESSING DATE--04DEC70

ABSTRACT/EXTRACT--(U) GP-0- ABSTRACT. THE CONTENT OF TOXIC CHEMICALS IN FOOD PRODUCTS HAS BEEN STEADILY INCREASING SINCE 1964. THE PRESENCE OF SUCH RESIDUES IN AMOUNTS ABOVE MAXIMUM PERMISSIBLE LIMITS IS DUE TO VIOLATION OF THE REGULATIONS GOVERNING THE USE OF COMPOUNDS. SINCE ONLY A SMALL NUMBER OF FOOD PRODUCTS CAN BE ANALYZED, THE LABORATORIES TRY TO MONITOR THE TIMES AND CONDITIONS OF APPLICATION OF THE CHEMICALS. INTRODUCTION OF A SYSTEM OF CERTIFICATION OF FINISHED FOOD PRODUCTS IS PROPOSED. THE FOOD PRODUCTS WOULD BE LABELED, SHOWING THE NAMES OF THE CHEMICALS USED IN GROWING THEM, DATES AND METHODS OF APPLICATION. INSPECTION AGENCIES WOULD CHECK ON COMPLIANCE WITH THE CERTIFICATION PROCEDURE, WHILE THE LABORATORIES WOULD MAKE SPOT CHECKS WHEN THE DATA ON THE CERTIFICATES SUGGESTED A POSSIBLE VIOLATION OF THE RULES FOR PROPER USE OF PESTICIDES, HERBICIDES, ETC. FACILITY: BELORUSSIAN SCIENTIFIC RESEARCH SANITARY HYGIENIC INSTITUTE.

UNCLASSIFIED

APPROVED FOR RELEASE: 08/09/2001 CIA-RDP86-00513R002202330003-6"

"APPROVED FOR RELEASE: 08/09/2001 CIA-RDP86-00513R002202330003-6

USSR UDC 614.37:632.95(476)

ADAMOVICH, YE. L., BUSLOVICH, S. YU., VYATCHANNIKOV, K. A., and PAROMCHIK, YE. I., Belorussian Scientific Research Sanitary-Hygienic Institute

"Laboratory Control of the Use of Toxic Chemicals and Methods of Improving This Control in Belorussia"

Moscow, Gigyena i Sanitariya, No 1, 1970, pp 100-101

Abstract: The content of toxic chemicals in food products has been steadily increasing since 1964. The presence of such residues in amounts above maximum permissible limits is due to violation of the regulations governing the use of compounds. Since only a small number of food products can be analyzed, the laboratories try to monitor the times and conditions of application of the chemicals. Introduction of a system of certification of finished food products is proposed. The food products would be labeled, showing the names of the chemicals used in growing them, dates and methods of application. Inspection agencies would check on compliance with the certification procedure, while the laboratories would make spot checks when the data on the certificates suggested a possible violation of the rules for proper use of pesticides, herbicides, etc.

1/1

APPROVED FOR RELEASE: 08/09/2001 CIA-RDP86-00513R002202330003-6"

"APPROVED FOR RELEASE: 08/09/2001 CIA-RDP86-00513R002202330003-6

1/2 012 UNCLASSIFIED

TITLE--DETOXICATION OF SIMAZIN BY MICROSCOPIC ALGAE -U- PROCESSING DATE--30OCT70

AUTHOR-(02)-KRUGLOV, YU.V., PAROMENSKAYA, L.N.

COUNTRY OF INFO--USSR

SOURCE--MIKROBIOLOGIYA, 1970, VOL 39, NR 1, PP 157-160

DATE PUBLISHED-------70

SUBJECT AREAS--BIOLOGICAL AND MEDICAL SCIENCES

TOPIC TAGS--HERBICIDE, BIODEGRADATION, GREEN ALGAE/(U)SIMAZIN HERBICIDE

CONTROL MARKING--NO RESTRICTIONS

DOCUMENT CLASS--UNCLASSIFIED

PROXY REEL/FRAME--1996/0442 STEP NO--UR/0220/70/039/001/0157/0160

CIRC ACCESSION NO--AP0117678

UNCLASSIFIED

APPROVED FOR RELEASE: 08/09/2001 CIA-RDP86-00513R002202330003-6"

"APPROVED FOR RELEASE: 08/09/2001 CIA-RDP86-00513R002202330003-6

2/2 012

UNCLASSIFIED

CIRC ACCESSION NO--AP0117678 PROCESSING DATE--30OCT70

ABSTRACT/EXTRACT--(U) GP-0- ABSTRACT. INTENSIVE SIMAZIN DETOXICATION TOOK PLACE IN SOIL INOCULATED WITH A CULTURE OF GREEN ALGA CHLOROSARCINA SP. GREEN ALGAE ANKISTRODESMUS BRAUNII AND CHLOROSARCINA SP. CONSUMED SIMAZIN FROM MINERAL SOLUTION. SIMAZIN WAS PARTIALLY METABOLIZED OR FORMED SOME PHYSICO CHEMICAL BOND WITH PROTEIN. THE RATE AND DEGREE OF SIMAZIN TRANSFORMATION SEEMED TO BE DIFFERENT IN SENSITIVE (ANK. BRAUNII) AND RESISTANT (CHLOROSARCINA SP.) ALGAL SPECIES.

UNCLASSIFIED

APPROVED FOR RELEASE: 08/09/2001 CIA-RDP86-00513R002202330003-6"

"APPROVED FOR RELEASE: 08/09/2001 CIA-RDP86-00513R002202330003-6

USSR

PARONDZHANOV, S. D.

UDC 512.98

"Evaluating Information Losses and Increasing Risk With Reduction of Observable Data in Problems of Sequential Evaluation"

Gor'kiy, Izvestiya VUZov: Radiofizika, Vol 15, No 11, 1972, pp 1749-1752

Abstract: Asymptotic evaluations are found for the risk increment of information losses when the observed data are reduced in problems of sequential evaluation. The author thanks E. M. Khazen for advice and interest in the work.

1/1

APPROVED FOR RELEASE: 08/09/2001 CIA-RDP86-00513R002202330003-6"

"APPROVED FOR RELEASE: 08/09/2001 CIA-RDP86-00513R002202330003-6

USSR

UDC: 681.325

PARONDZHANOV, V. D., DANILUSHKIN, Yu. V.

"A Permanent Memory Device"

Moscow, Otkrytiya, Izobreteniya, Promyshlennyye Obraztsy, Tovarnyye Znaki, No 20, Jul 72, Author's Certificate No 343306, Division G, filed 11 Jun 70, published 22 Jun 72, pp 175-176

Translation: This Author's Certificate introduces a permanent memory device which contains an address register whose outputs are connected through a decoder and interrogation amplifiers to the input of a storage unit. The output of the storage unit is connected thorugh readout amplifiers and a number register to the input of an error decoding module. As a distinguishing feature of the patent, the operating reliability of the device is improved by adding a module for determining check digits. The input of this module is connected to the output of the address register, and the output of the module is connected to the input of the error decoding module.

1/1

APPROVED FOR RELEASE: 08/09/2001 CIA-RDP86-00513R002202330003-6"

"APPROVED FOR RELEASE: 08/09/2001 CIA-RDP86-00513R002202330003-6

Pharmacology and Toxicology

USSR

UDC 575.24

PARONIKYAN, G. M., AKOPYAN, L. G., and OGANESYAN, M. G., Institute of Fine Organic Chemistry, Academy of Sciences Armenian SSR, Yerevan

"Mutagenic Effect of Some New Chemical Compounds. I. Study of the Mutagenic Effect of Nitrogen Mustards on Escherichia coli P-678"

Moscow, Genetika, No 4, 1971, pp 113-117

Abstract: Study of the mutagenic effect of 22 new nitrogen mustards, 2-(4)-alkoxy-5-bromo(chloro)-benzyl-bis-(β-chloroethyl)amines and bis-(β-chloroethyl)amides of 2-alkoxy-5-bromobenzoic acid, showed a distinct relationship between their mutagenic activity and chemical structure. Even minor changes, e.g., lengthening of the alkoxy radical from propyl to amyl, markedly affected the mutagenic activity of the compounds. The most active were substances with methyl and ethyl radicals. Five of the compounds proved to be more active than nitrogen mustard; the most potent was 2-ethoxy-5-bromobenzyl-bis-(β-chloroethyl)amine. These derivatives induced over 200% revertants compared with the control.

1/1

APPROVED FOR RELEASE: 08/09/2001 CIA-RDP86-00513R002202330003-6"

"APPROVED FOR RELEASE: 08/09/2001 CIA-RDP86-00513R002202330003-6

USSR

PARONIKYAN, V. O., Doklady Akademii Nauk Armyanskoy SSR, Vol 51, No 4, 70, pp 234-238

The analytical data show that regardless of the distribution functions assumed, the geological trends are confirmed.

If the distribution function is not a priori known then a sufficiently accurate evaluation of the real content of elements may be the arithmetric mean for a value of the coefficient of variation up to 50%. In such cases logarithmic transformation of the contents makes no substantial change in the mean value. For a 50% coefficient of variation and higher, the best evaluation of the mean value will be the mean geometric content of the elements.

2/2

APPROVED FOR RELEASE: 08/09/2001 CIA-RDP86-00513R002202330003-6"

"APPROVED FOR RELEASE: 08/09/2001 CIA-RDP86-00513R002202330003-6

USSR

PARONIKYAN, V. O. UDC 550.8.053.519

"The Question of Determining the True Contents of Elements in Ores and Rocks"

Yerevan, Doklady Akademii Nauk Armyanskoy SSR, Vol 51, No 4, 70, pp 234-238

Abstract: This article attempts to establish the relationship between the mean arithmetic and mean geometric contents of certain elements (Cu, Zn) in ores and also in rocks, thus making it possible to ascertain the true contents of elements without resorting to time-consuming computations to establish distribution functions.

Two diagrams are given to graphically illustrate the findings in this article.

An equation of regression is found which permits converting from the mean arithmetic content to the mean geometric content and back if the coefficient of variation is known. This is especially important in that research (geological) where analytical methods do not allow the distribution functions to be reliably determined.

1/2

APPROVED FOR RELEASE: 08/09/2001 CIA-RDP86-00513R002202330003-6"

"APPROVED FOR RELEASE: 08/09/2001 CIA-RDP86-00513R002202330003-6

1/2 013

UNCLASSIFIED

TITLE--SELECTION OF AN EFFICIENT SCHEME FOR DRYING SYNTHETIC DETERGENTS -U-

PROCESSING DATE--20NOV70

AUTHOR-(04)-PARONYAN, V.KH., KAFIYEV, N.M., SHMIDT, A.A., ANTON, A.G.

COUNTRY OF INFO--USSR

SOURCE--MASLO-ZHIR. PROM. 1970, 36(1), 25-8

DATE PUBLISHED--------70

SUBJECT AREAS--CHEMISTRY, MECH., IND., CIVIL AND MARINE ENGR

TOPIC TAGS--DETERGENT, DRYING OVEN, BOND ENERGY, WATER, SULFATE

CONTROL MARKING--NO RESTRICTIONS

DOCUMENT CLASS--UNCLASSIFIED

PROXY REEL/FRAME--3002/0450

STEP NO--UR/9085/70/036/001/0025/0028

CIRC ACCESSION NO--AP0128020

UNCLASSIFIED

APPROVED FOR RELEASE: 08/09/2001 CIA-RDP86-00513R002202330003-6"

"APPROVED FOR RELEASE: 08/09/2001 CIA-RDP86-00513R002202330003-6

2/2 013

UNCLASSIFIED

CIRC ACCESSION NO--AP0128020 PROCESSING DATE--20NOV70

ABSTRACT/EXTRACT--(U) GP-0- ABSTRACT. H SUB2 O, DETERGENT BOND ENERGY WAS DETD. FOR 2 DETERGENTS CONTG. 25PERCENT ALKYL SULFATE (I) AND TETRAPROPYLENEBENZENESULFONATE (II) RESP. HIGHER VALUES OF BOND ENERGY WERE FOUND FOR I THAN FOR II. THE ADDN. OF 15PERCENT NA SUB2 CO SUB3 TO I AND II INCREASED THE BOND ENERGY IN THE ENTIRE REGION STUDIED. AS THE BOND ENERGY PER UNIT AMT. OF H SUB2 O INCREASES WITH DECREASING H SUB2 O CONTENT, IT IS RECOMMENDED THAT ADDNL. HEAT ENERGY BE SUPPLIED TO THE DRYING AIR 3.5-4.0 M FROM THE CONCIAL PART OF THE DRYING CHAMBER.

FACILITY: MOSK. FILIAL VNIIZHA, MOSCOW, USSR.

UNCLASSIFIED

APPROVED FOR RELEASE: 08/09/2001 CIA-RDP86-00513R002202330003-6"

"APPROVED FOR RELEASE: 08/09/2001 CIA-RDP86-00513R002202330003-6

1/2 020 UNCLASSIFIED PROCESSING DATE--02OCT70

TITLE--KINETICS OF CONCENTRATION FLUCTUATIONS IN N,AMYL ALCOHOL NITROMETHANE SOLUTIONS WITH AN UPPER CRITICAL POINT OF DISSOLUTION -U-

AUTHOR-(03)-KHABIBULLAYEV, P.K., ALIYEV, S.S., PARPIYEV, K.

COUNTRY OF INFO--USSR

SOURCE--VESTN. MOSK. UNIV., KHIJ. 1970, 11(1), 121-2

P

DATE PUBLISHED--------70

SUBJECT AREAS--CHEMISTRY, PHYSICS

TOPIC TAGS--ACOUSTIC PROPERTY, NITROMETHANE, ALCOHOL, DISSOLUTION, ULTRASONIC FREQUENCY

CONTROL MARKING--NO RESTRICTIONS

DOCUMENT CLASS--UNCLASSIFIED

PROXY REEL/FRAME--1989/0258 STEP NO--UR/0189/70/011/001/0121/0122

CIRC ACCESSION NO--AP0106914

UNCLASSIFIED

APPROVED FOR RELEASE: 08/09/2001 CIA-RDP86-00513R002202330003-6"