"APPROVED FOR RELEASE: 09/17/2001 CIA-RDP86-00513R002202410010-9

USSR

UDC 621.372.5

PEREPELYATNIK, P. A., KLIMENTOV, P. P., GLUSHKO, K. P.

"Cascade Inclusion of Active Quadripoles"

Tr. Mosk. in-ta elektron. mashinostr. (Works of Moscow Institute of Electronic Machine Building), 1970, vyp. 13, pp 88-99 (from RZh-Radiotekhnika, No 4, Apr 71, Abstract No 4A156)

Translation: In the case of cascade inclusion of identical active nonmutual quadripoles the input and output impedances of the quadripole turn out to be equal to its iterative resistances. The coefficient K+ characterizing the ratio of the increment of the input impedance of the quadripole to the increment of the load resistance at the point where the load resistance is equal to the iterative resistance is introduced. The coefficient K+ is used to construct a unique definition of the input and output iterative resistances and the transmission coefficient of quadripoles when operating on iterative resistances.

1/1

APPROVED FOR RELEASE: 09/17/2001 CIA-RDP86-00513R002202410010-9"

"APPROVED FOR RELEASE: 09/17/2001 CIA-RDP86-00513R002202410010-9

USSR

UDC: 8.74

PEREPLETCHIK L. S.

"Problems of Construction of ACS Hardware Systems"

Mat. i Inform. Probl. Prognozir. i Upr. Naukoy [Mathematics and Information Problems of the Prediction and Control of Science--Collection of Works], Kiev, 1971, pp 236-248 (Translated from Referativnyy Zhurnal Kibernetika, No 11, 1972, Abstract No 11V566, by V. Mikheyev)

Translation: The process of control of training of specialists on the university scale is defined. Man appears as a component part of an element of a system, the actions of man are regulated in advance and precisely defined by the requirements of the technological process. The first stage in a system for automatic collection and input of information on the training process to the computer, developed at the computer center of NETI, is described. This system can in principle input and process any information. In particular, in addition to information on the grades of students during test weeks and during the session, it is suggested that the results of sociological studies, information on student dropout rate and analysis of causes, information on the social composition and training level of matriculants by processed. The system consists of a network of remote terminals, connected by telephone cables to the

1/2

APPROVED FOR RELEASE: 09/17/2001 CIA-RDP86-00513R002202410010-9"

"APPROVED FOR RELEASE: 09/17/2001 CIA-RDP86-00513R002202410010-9

USSR

Perepletchik, L. S.

Mat. i Inform. Probl. Prognozir. i Upr. Naukoy, Kiev, 1971, pp 236-248

central processor. The information transmitted from the remote terminals is automatically recorded on punch tape using the PL-80 puncher. Each remote terminal has a keyboard, busy signaller, and ready signal transmit button. The information input from a terminal in one pass consists of two Ural-11 machine words. Several information formats are developed. The main one is as follows: 1) subject code and type of operation; 2) department codes; 3) student codes; 4) grade. If the operator makes a mistake and notices it, he can correct his error using a special code "error" key. The central processor consists of the following sections: 1) remote terminal readiness interrogation unit; 2) unit taking information from terminal; 3) synchronizer with PL-80 puncher; 4) unit checking readiness of communications channels to remote terminals; 5) reliability increase unit. The throughput capacity of the system is determined by the tape punching rate, a maximum of 80 rows per second. Results of computation using the Ural-11 computer are presented, including determinations of combinations of data transmission system parameters to maximize the useful operation and determination of transmission rates and reliability within the limitations of the system.

2/2

APPROVED FOR RELEASE: 09/17/2001 CIA-RDP86-00513R002202410010-9"

"APPROVED FOR RELEASE: 09/17/2001 CIA-RDP86-00513R002202410010-9

USSR UDC: 681.327

TERYAYEV, V. A., SHESTAKOV, I. B., PEREPLETCHIKOV, G. N., MARKOVSKIY, V. N., IVASHKIN, G. P., MAR'YANOVSKIY, M. M.

"Method of Manufacturing Thin-Film Magnetic Matrices"

USSR Authors' Certificate No 251713, Filed 2 April 1968, Published 10 February 1970 (Translated from Referativnyy Zhurnal Avtomatika, Telemekhanika i Vychislitel'naya Tekhnika, No 10, 1970, Abstract No 10B161P, by N. V.)

Translation: A method is suggested for manufacturing thin-film magnetic matrices differing from known methods in that in order to decrease the ohmic resistance of the control lines and retain the magnetic properties of the matrix, the conducting layers are produced by gluing down foil using organic varnishes (glues) as the matrices are heated in the presence of a magnetic field in the plane of the substrate. One illustration.

1/1

APPROVED FOR RELEASE: 09/17/2001 CIA-RDP86-00513R002202410010-9"

"APPROVED FOR RELEASE: 09/17/2001 CIA-RDP86-00513R002202410010-9

1/2 013 UNCLASSIFIED PROCESSING DATE--20NOV70

TITLE--DETERMINATION OF THE NUMBER OF DOUBLE BONDS IN POLYESTER ACRYLATES BY CATALYTIC MICROHYDROGENATION -U-

AUTHOR-(02)-GETMANENKO, YE.N., PEREPLETCHIKOVA, YE.M.

COUNTRY OF INFO--USSR

SOURCE--LAKOKRASOCH. MATER. IKH PRIMEN. 1970, (1), 59-60

DATE PUBLISHED--------70

SUBJECT AREAS--MATERIALS, CHEMISTRY

TOPIC TAGS--POLYACRYLATE RESIN, PALLADIUM, CATALYTIC HYDROGENATION

CONTROL MARKING--NO RESTRICTIONS

DOCUMENT CLASS--UNCLASSIFIED

PROXY REEL/FRAME--1997/0438 STEP NO--UR/0303/70/000/001/0059/0060

CIRC ACCESSION NO--AP0119374

UNCLASSIFIED

APPROVED FOR RELEASE: 09/17/2001 CIA-RDP86-00513R002202410010-9"

"APPROVED FOR RELEASE: 09/17/2001 CIA-RDP86-00513R002202410010-9

2/2 013 UNCLASSIFIED PROCESSING DATE--20NOV70

CIRC ACCESSION NO--AP0119374

ABSTRACT/EXTRACT--(U) GP-0- ABSTRACT. THE APP. FOR THE TITLE DETN. WAS DESCRIBED EARLIER BY M. R. CHAPHEKAS, ET AL. (1959). PD ON CHARCOAL CATALYST PERMITTED THE HYDROGENATION TO BE COMPLETED IN SIMILAR TO 1.5 HR. THE PROCEDURE WAS STANDARDIZED BY USING PURE CINNAMIC ACID. THE RELATIVE ERROR OF THE DETN. WAS 3.5PERCENT.

UNCLASSIFIED

APPROVED FOR RELEASE: 09/17/2001 CIA-RDP86-00513R002202410010-9"

"APPROVED FOR RELEASE: 09/17/2001 CIA-RDP86-00513R002202410010-9

1/2 023 UNCLASSIFIED PROCESSING DATE--30OCT70

TITLE--DETERMINATION OF THE CONTENT OF SOME AUXILIARY SUBSTANCES IN SUSPENSION POLY VINYL CHLORIDE -U-

AUTHOR-(05)-PEREPLETCHIKOVA, YE.M., KALININ, A.I., KOMLEVA, V.N., LUNICHEVA, E.V., ZILBERMAN, YE.N.

COUNTRY OF INFO--USSR

SOURCE--PLAST. MASSY 1970, (3), 48-51

DATE PUBLISHED--------70

SUBJECT AREAS--MATERIALS

TOPIC TAGS--POLYVINYL CHLORIDE, CHEMICAL SUSPENSION, CHROMATOGRAPHY, POLAROGRAPHIC ANALYSIS, COLLOID, LEAD, CADMIUM, BARIUM, CALCIUM, ION, CHEMICAL ANALYSIS

CONTROL MARKING--NO RESTRICTIONS

DOCUMENT CLASS--UNCLASSIFIED

PROXY REEL/FRAME--1999/1802 STEP NO--UR/0191/70/000/003/0048/0051

CIRC ACCESSION NO--AP0123599

UNCLASSIFIED

APPROVED FOR RELEASE: 09/17/2001 CIA-RDP86-00513R002202410010-9"

"APPROVED FOR RELEASE: 09/17/2001 CIA-RDP86-00513R002202410010-9

2/2 023 UNCLASSIFIED PROCESSING DATE--30OCT70

CIRC ACCESSION NO--AP0123599

ABSTRACT/EXTRACT--(U) GP-0- ABSTRACT. THE QUANT. EXTN. OF RESIDUAL INITIATORS (E.G., BZ SUB2 O SUB2, AZOBISISOBUTYRONITRILE, LAUROYL PEROXIDE, ETC.) FROM SUSPENSION POLY (VINYL CHLORIDE) (I) AND THE DETN. OF INITIATORS BY GAS,LIQ. CHROMATOG. AND POLAROGRAPHY WERE DESCRIBED. QUAL. CHEM. REACTIONS WERE USED TO IDENTIFY PROTECTIVE COLLOIDS IN AQ. EXTS. OF I. PB PRIME2 POSITIVE, CD PRIME2 POSITIVE, BA PRIME2 POSITIVE, AND CA PRIME2 POSITIVE WERE DETD. BY EMISSION SPECTROSCOPY, POLAROGRAPHY, AND QUAL. ANAL., WHEREAS THE CONTENT OF CIS,9,OCTADECENE,1,OL WAS DETD. BY GAS LIQ. CHROMATOG.

UNCLASSIFIED

APPROVED FOR RELEASE: 09/17/2001 CIA-RDP86-00513R002202410010-9"

"APPROVED FOR RELEASE: 09/17/2001 CIA-RDP86-00513R002202410010-9

USSR UDC: 534.2

GUSEV, V. N., KOGAN, M. N., PEREPUKHOV, V. A.

"On Similarity and Change of Aerodynamic Characteristics in a Transient Region at Hypersonic Flow Velocities"

Uch. Zap. Tsentr. aerogidrodinam. in-ta (Scientific Notes of the Central Aerohydrodynamic Institute), 1970, 1, No 1, pp 24-33 (from RZh-Mekhanika, No 9, Sep 70, Abstract No 9B320)

Translation: An investigation is made into the aerodynamic characteristics of simply shaped bodies in the transition region between the free molecular limit and the continuous medium limit at hypersonic flow velocities. A dimensionless number to test similarity is found from the Boltzmann equation. It is found that the principal dimensionless gas-dynamic parameter is the Reynolds number with the coefficient of viscosity calculated from the stagnation temperature. A comparison is made between experimental data and theoretical data analyzed with regard to this dimensionless number. Authors' abstract.

1/1

APPROVED FOR RELEASE: 09/17/2001 CIA-RDP86-00513R002202410010-9"

"APPROVED FOR RELEASE: 09/17/2001 CIA-RDP86-00513R002202410010-9

Acc. Nr: AP0038037

Ref. Code: UR 0056

PRIMARY SOURCE: Zhurnal Eksperimental'noy i Teoreticheskoy Fiziki, 1970, Vol 58, Nr 1, pp 135-144

ANALYTICAL REPRESENTATION OF THE DISTRIBUTION FUNCTION OF OSCILLATION FREQUENCIES OF AN IDEAL CRYSTAL LATTICE

Peresada, V. I.; Afanas'yev, V. N.

A new method is proposed for analytic approximation of the distribution function of the squared harmonic oscillation frequencies of an ideal crystal lattice on basis of the force constants. The Montroll method for analytic approximation of the distribution function on basis of given numerical values of some of the first distribution function moments is improved. The method is illustrated in a concrete case.

REEL/FRAME
19731079

21

APPROVED FOR RELEASE: 09/17/2001 CIA-RDP86-00513R002202410010-9"

"APPROVED FOR RELEASE: 09/17/2001 CIA-RDP86-00513R002202410010-9

USSR UDC 632.95

PERESEDOV, ~~V. P.~~, PREOBRAZHENSKAYA, E. L., and ZASEDATELEVA, G. V.

"Toxicity of New Pesticide Dibrom"

Tr. Volgogr. med. in-ta (Works of Volgograd Medical Institute), Vol 24, 1971, pp 194-197 (from Referativnyy Zhurnal -- Khimiya, Svodnyy Tom (I, L-S), No 1(II), 1973, Abstract No 1N447 by T. A. Belyayeva)

Translation: The LD_{50} amounts to 440 $\pm$ 17 and 465 $\pm$ 17 mg/kg for white mice and rats, respectively, when administered perorally. The acute poisoning of animals is accompanied by activation of the choline-reactive systems. In the case of subcutaneous application the LD_{50} is 1234 $\pm$ 70 and 1200 $\pm$ 63 mg/kg for white rats and rabbits, respectively. The cummulation coefficient of dibrom is 3.6. The new pesticide possesses anticholinesterase activity.

1/1

APPROVED FOR RELEASE: 09/17/2001 CIA-RDP86-00513R002202410010-9"

"APPROVED FOR RELEASE: 09/17/2001 CIA-RDP86-00513R002202410010-9

USSR

UDC 541.62:547.785.5'789.61'854.4:543.422.25.4

ALEKSEYEVA, L. M., PERESLENT, YE. M., SHEYNKER, YU. N., KOCHERGIN, P. M., KRASOVSKIY, A. N., and KURMAZ, B. V., All Union Scientific Chemical-Pharmaceutical Research Institute imeni S. Ordzhonikidze, Moscow

"Ring-Chain Tautomerism of S-Acylalkyl Substituted Imidazoles and Annelated Imidazole Systems"

Riga, Khimiya Geterotsiklicheskikh Soyedineniy, No 8, Aug 72, pp 1125-1131

Abstract: The ring-chain tautomerism of S-acylalkyl substituted 2-mercapto-4,5-diphenylimidazole, 2-mercaptobenzimidazole, 2-mercaptonapht[1,2-d]imidazole, 8-mercaptopurine, 8-mercaptotheophyline, and 2-mercaptoimidazoline has been studied by PMR and IR spectroscopy. Depending on the structure of aldehyde or ketone radical, or on the type of heterocycle condensed with the imidazole nucleus, depending on the state of the aggregate and on the type of solvent used, these compounds can exist as open heterylmercaptoaldehydes (ketones), as cyclic 3-hydroxy derivatives of imidazothiazoline systems or as mixed tautomeric forms. When a substituent exists on position 2 of the thiazoline ring, the cyclic compounds exist as a mixture of two disstereoisomeric forms.

1/1

APPROVED FOR RELEASE: 09/17/2001 CIA-RDP86-00513R002202410010-9"

"APPROVED FOR RELEASE: 09/17/2001 CIA-RDP86-00513R002202410010-9

1/2 011 UNCLASSIFIED PROCESSING DATE--27NOV70

TITLE--SYNTHESIS OF BENZO,G,QUINOLINE DERIVATIVES. VI MECHANISM OF THE CYCLIZATION OF BETA,2, CARBOXYNAPHTYL,3,AMINO,PROPIONIC ACID TO

AUTHOR-(03)-BEKHLI, A.F., KORZYREVA, N.P., PERESLENI, YE.M.

COUNTRY OF INFO--USSR

SOURCE--KHIM. GETEROTSIKL. SOEDIN. 1970, (3), 394-8

DATE PUBLISHED--------70

SUBJECT AREAS--CHEMISTRY

TOPIC TAGS--AROMATIC CARBOXYLIC ACID, BENZENE DERIVATIVE, AMINE DERIVATIVE, QUINOLINE, CHEMICAL SYNTHESIS, MOLECULAR STRUCTURE

CONTROL MARKING--NO RESTRICTIONS

DOCUMENT CLASS--UNCLASSIFIED

PROXY REEL/FRAME--3003/1000 STEP NO--UR/0409/70/000/003/0394/0398

CIRC ACCESSION NO--AP0130043

UNCLASSIFIED

APPROVED FOR RELEASE: 09/17/2001 CIA-RDP86-00513R002202410010-9"

"APPROVED FOR RELEASE: 09/17/2001 CIA-RDP86-00513R002202410010-9

2/2 011 UNCLASSIFIED PROCESSING DATE--27NOV70

CIRC ACCESSION NO--AP0130043

ABSTRACT/EXTRACT--(U) GP-0- ABSTRACT. A NIXT. SHOWN ON MICROFICHE.

UNCLASSIFIED

APPROVED FOR RELEASE: 09/17/2001 CIA-RDP86-00513R002202410010-9"

"APPROVED FOR RELEASE: 09/17/2001 CIA-RDP86-00513R002202410010-9

USSR

UDC [537.226 + 537.311.33] : [537 + 535]

GOLOVEY, M. I., PERESH, Ye. Yu., LADA, A. V., POTORIY, M. V.

"Some Electrophysical Characteristics of Metathiobismutite and Metaselenobismutite of the Alkali Metals"

Uzhgorod, V sb. Nekotor. vopr. khimii i fiz. poluprovodnikov slozhn. sostava (Some Problems of the Chemistry and Physics of Complex Semiconductors -- collection of works), 1970, pp 150-157 (from RZh-Fizika, No 11, 1971, Abstract No 11E952)

Translation: $XBiSe_2$ and $YBiS_2$ where X is Na, K, Rb, Cs; and Y is Li, Na, K, Rb, Cs are synthesized. Aquadag or Pt contacts are applied for measuring the electrical conductivity σ and the thermal emf α of the specimens. All synthesized materials are impure p-semiconductors. The thermal activation energy found in the natural conductance region increases with increasing ion radius of the alkali metals. The growth in α is apparently the result of the increase in mobility of the charge carriers. With the attainment of the natural conductivity temperature, α begins to fall off.

1/1

APPROVED FOR RELEASE: 09/17/2001 CIA-RDP86-00513R002202410010-9"

"APPROVED FOR RELEASE: 09/17/2001 CIA-RDP86-00513R002202410010-9

Acc. Nr: AP0034713 Ref. Code: UR 0241

PRIMARY SOURCE: Meditsinskaya Radiologiya, 1970, Vol 15, Nr 2, pp3-6

THE RESULTS OF TREATMENT OF CHILDREN WITH WILMS' TUMOR

Pereslegin, I. A.; Yefremenko, S. G.;

Summary

Clinical observations over 150 children and an analysis of their life span made it possible to arrive at the conclusion that irrespective of the age, stage of the disease, histological structure of the tumor and volume of the operation the most expedient is combined therapy — preoperative irradiation with subsequent operation. The most effective absorbed doses are within the limits of 3500—4000 rad.

D. n.

1/1 REEL/FRAME 02

19711418

APPROVED FOR RELEASE: 09/17/2001 CIA-RDP86-00513R002202410010-9"

"APPROVED FOR RELEASE: 09/17/2001 CIA-RDP86-00513R002202410010-9

Acc. Nr: AP0049172

Abstracting Service: CHEMICAL ABST. 5-70

Ref. Code: 4R0080

P

103961e Physicochemical properties of 1,4-tetra- and 1,8-octamethylene diisocyanates. Zhuravlev, E. Z.; Koronina, T. I.; Pereslegina, L. S.; Kormushechkina, A. I.; Konstantinov, I. I. (Inst. Azot. Prom., Org. Sin., Dzerzhinsk, USSR). *Zh. Prikl. Khim. (Leningrad)* 1970, 43(1), 159-63 (Russ). From temp.-dependence of mol. vols. in $(CH_2)_n(NCO)_2$ with n = 4 or 8, as well as from temp. dependence of their d., viscosity and n, it was concluded that the contribution of methylene groups to mol. vols. depends not only on the temp. but also on their location in the mol. Activation energy of flow is increased by 120 cal/mole per CH_2 in the 20–50° interval and by 90 in the 50–80° interval. The NCO group contribution is 2700 cal/mole and 2350 cal/mole, resp. Thus, these isocyanates have a degree of interaction or conjugation not only within NCO groups but also between the terminal NCO groups, which declines with increasing value of n.

G. M. Kosolapoff

1/1

REEL/FRAME 19800979

7N

APPROVED FOR RELEASE: 09/17/2001 CIA-RDP86-00513R002202410010-9"

"APPROVED FOR RELEASE: 09/17/2001 CIA-RDP86-00513R002202410010-9

USSR

KUNITSKIY, Yu., and PERESELENTSEVA, L.

"Fourth Conference of Graduate Students and Young Researchers at the Institute for Problems of Material Science, Academy of Sciences Ukr SSR"

Kiev, Poroshkovaya Metallurgiya, No 7, Jul 70, pp 105-106

Abstract: The Fourth Conference of Graduate Students and Young Researchers at the Institute for Problems of Material Science, Academy of Sciences Ukr SSR, was sponsored by the Council of Young Researchers and the Graduate Students' Bureau of Refractory Compounds. In his opening address, Prof. G. V. Samsonov, Corresponding Member of the Ukrainian Academy of Sciences noted the variety of topics and trends of reports as well as the great popularity of such conferences, demonstrating the obvious benefit of sharing ideas by young scientists. A total of 100 reports were presented at the three sections of the conference by representatives of Kiev, Moscow, Zaporozh'ye, Dnepropetrovsk, and Chelyabinsk. The topics of the reports at the plenary session were: hot extension of transition metals (Petrykina, R. Ya.); physical properties of carbides in the homogeneity region (Naumenko, V. Ya.); theory and technology of electrospark machining (Verkhoturov, A. D.); new antifriction multi-layer material (Kovalenko, Yu. I.); causes of power-energy stability of atomic states in the condensed phase

1/3

APPROVED FOR RELEASE: 09/17/2001 CIA-RDP86-00513R002202410010-9"

"APPROVED FOR RELEASE: 09/17/2001 CIA-RDP86-00513R002202410010-9

USSR

KUNITSKIY, Yu., and PEREVELENTSEVA, L., Poroshkovaya Metallurgiya, No 7, Jul 70, pp 105-106

(Pryadko, L. F.). The first section of the conference heard reports on the following topics: physical properties of carbohydrides (V. V. Morozov); the fine structure of deformed carbides (S. A. Bozhko); electron structure of the valence and conductivity bands of superconductive compounds (Bondarenko, T. N.); chemical stability of titanium carbides in the homogeneity region (Kimelovskaya, S. A.); electron spectrum of some dodecaborides (Odintsov, V. V.); physical properties of low-alloy titanium- and zirconium-base alloys and the study of diborides of transition metals (Kovenskaya, B. A.). Some of the topics presented at the second section were: nitriding transition metals of the IV-VI groups and determining the kinetics of growth of the diffusion layer (Kaplina, G. S.); unique method of obtaining high-porosity products of fibrous structure from transition metal carbides (Pochkay, G. N.); compatibility of carbides, borides, and silicides with transition metals (Yurchenko, O. S. and Motyazhev, V. I.); effect of phosphides on structures and properties of hypereutectic Silumins (Sil'chenko, G. V.). At the third section the emphasis was placed on problems of the testing of materials. Some of the topics on metals were: effect of the structure of boride coatings on wear resistance (Polotay, V. V.);
2/3

APPROVED FOR RELEASE: 09/17/2001 CIA-RDP86-00513R002202410010-9"

"APPROVED FOR RELEASE: 09/17/2001 CIA-RDP86-00513R002202410010-9

USSR

KUNITSKIY, Yu., and PERESELENTSEVA, L., Poroshkovaya Metallurgiya, No 7, Jul 70, pp 105-106

microhardness anisotropy of transition metal carbides (Rogovoy, Yu. I.); structure and properties of sintered materials of gas turbine parts (Kazantsev, N. A.); flammability of powders and propagation velocity of a flame in a sample of air (Tsidelko, T. I., Barlas, R. A., and Shapoval, A. V.); and potential use of refractory semiconductor compounds of transition and rare earth metals for semiconductor equipment.

3/3

APPROVED FOR RELEASE: 09/17/2001 CIA-RDP86-00513R002202410010-9"

"APPROVED FOR RELEASE: 09/17/2001 CIA-RDP86-00513R002202410010-9

USSR

UDC: 621.382.22

PLAKSIY, V. T., SVETLICHNYY, V. M., and PERESYN'KO, O. A.

"Inertia of Point-Contact UHF Detectors of BiSb Alloy"

Kiev, Izvestiya VUZ - Radioelektronika, vol. 14, No. 5, 1971, pp 588-589

Abstract: In this brief communication, the thermal time constant characterizing the BiSb alloy point-contact detector is defined as the time required for establishing a steady-state temperature distribution of the crystal lattice in yielding or accepting UHF power. This time constant is found by solving the heat conduction equation of the BiSb device and getting an expression for the temperature distribution of an ideally thermoconducting sphere in a medium of specified thermal conductivity, density, and specific heat capacity. The time dependence of the crystal lattice temperature after the application of a particular level of UHF power is examined. The authors find that a detector made of $Bi_{90}Sb_{10}$, to which UHF power modulated by short rectangular pulses is applied, detects the video signal envelope of 100 ns duration without noticeable distortion of the pulse shape.

1/1

APPROVED FOR RELEASE: 09/17/2001 CIA-RDP86-00513R002202410010-9"

"APPROVED FOR RELEASE: 09/17/2001 CIA-RDP86-00513R002202410010-9

USSR

UDC 658.562.011.56

KORKONOSOV, V.P., and PERESYPKIN, A.V.

"Stability of Radioisotopic Relay-Type Instruments"

V sb. Tochnost' radioelektron. apparatury (Accuracy of Electronic Equipment -- Collection of Works), Sb. 1, Moscow, 1971, pp 167-168 (from RZh-Avtomatika Telemekhanika i Vychislitel'naya Tekhnika, No 1, Jan 72, Abstract No 1A376 by B.U.)

Translation: In the operation of radioisotopic relay-type instruments (RRI) the stability of their parameters during variations in the ambient temperature and supply voltage is of particular importance. Since the radioactive radiation sources used in RRI do not depend on these factors, the principal cause of RRI instability is the instability of the detection unit and electronic relay unit. The instability of the detection unit is determined entirely by the instability of the radiation detector that is used. Current RRIs most often use scintillation gas-discharge counters as the radiation detector. The instability of detection units (DU) with scintillation counters reaches 20%, while with gas-discharge counters it reaches 10%. The instability of the relay unit depends on the method of processing the statistical information coming from the DU. The use of the discrete information processing method as the basis of relay unit construction is promising from the standpoint of increasing

1/2

APPROVED FOR RELEASE: 09/17/2001 CIA-RDP86-00513R002202410010-9"

"APPROVED FOR RELEASE: 09/17/2001 CIA-RDP86-00513R002202410010-9

USSR

KORKONOSOV, V. P., et al, Tochnost' radioelektron. apparatury, Sb. 1, Moscow 1971, pp 167-168

RRI stability. A description is given of a relay unit which is based on the discrete information processing method. The instability of its thresholds does not exceed 10% over the entire temperature variation range and does not exceed 1% for supply voltage variations in the range of minus 15% to plus 10% of the rated voltage.

2/2

APPROVED FOR RELEASE: 09/17/2001 CIA-RDP86-00513R002202410010-9"

"APPROVED FOR RELEASE: 09/17/2001 CIA-RDP86-00513R002202410010-9

Plant Pathology

USSR

UDC 632.4:633.11:582.285.2(47+47)

LESOVOY, M. P., FEDOROVA, V. A., SHKODENKO, V. I. TERESHCHENKO, B. A., SHCPINA, V, V., IBRAGIMOV, G. R., AKHMEDOV, S. A., YEROGOVA, N. L., MAMONTOVA, A. N., PERESYPKIN, V. F., BOYKO, Yu. I., SHAVARINA, Z. A., CHUMAKOV, A. Ye., YAKEMENKO, Z. I., PAYCHADZE, L. V., and EL'CHIBAYEV, A. A., All-Union Institute of Plant Protection, Ukrainian Institute of Plant Protection, Ukrainian Agricultural Academy, Azerbaydzhan Institute of Agriculture, Central Asian Institute of Plant Pathology, and Kazan' Institute of Plant Protection, Georgian Institute of Plant Pathology

"Race Formation in Puccinia triticina Eriks. and P. striiformis West. in the USSR"

Leningrad, Mikologiya i Fitopatologiya, No 6, 1972, pp 428-434

Abstract: Study of the causative agents of orange leaf and stripe rusts of wheat in different parts of the Soviet Union and some other European countries showed that, despite the great variety of races, only a few are responsible for epiphytotics. The main races are fairly constant from year to year. This stabilization is due to the fact that that more than 90% of all the regionalized wheat varieties in the USSR are susceptible to all races of the pathogens. The racial composition of the pathogens in the USSR is similar to that occurring elsewhere in Europe because of the exchange of original forms and use of the

1/2

APPROVED FOR RELEASE: 09/17/2001 CIA-RDP86-00513R002202410010-9"

"APPROVED FOR RELEASE: 09/17/2001 CIA-RDP86-00513R002202410010-9

USSR

LESOVOY, M. P., et al., Mikologiya i Fitopatologiya, No 6, 1972, pp 428-434

same components in breeding wheat varieties. The appearance of new races and biotypes and changes in their virulence are the result of mutation, heterokaryosis, resistant varieties, and sexual hybridization.

2/2

APPROVED FOR RELEASE: 09/17/2001 CIA-RDP86-00513R002202410010-9"

"APPROVED FOR RELEASE: 09/17/2001 CIA-RDP86-00513R002202410010-9

USSR Phytology

UDC 633.16:581.51

PERESYPKIN, V. F., Corresponding Member, VASKhNIL, and REBENKO, V. P., Candidate of Biological Sciences, Donetsk State Agricultural Experimental Station

"The Mechanism of Increasing the Resistance of Barley to Ustilago Hordei Kell. et sw. Under Conditions of Mineral Nutrition"

Moscow, Doklady Vsesoyuznoy Ordena Lenina Akademii Sel'skokhozyaystvennykh Nauk imeni V. I. Lenin, (All Union Order of Lenin Academy of Agricultural Sciences imeni V. I. Lenin, No. 7, Jul 70, pp 5-7

Abstract: Histological, biochemical, and field studies were made of Donetsk 576 barley and its the fungus pathogen Ustilago hordei Kell, et sw. Infected barley grains were soaked in 0.1% $CoSO_4$, 0.2% $CuSO_4$, and water (control) before planting. Studies were made 18 hours after soaking, during growth and at harvest, and on reseeding and reharvesting for 4 years. The results showed that cobalt sulfate and copper sulfate are decidedly deleterious to the fungus, causing its disorganization, fragmentation, and ultimate lysis. Both compounds tested, especially the cobalt sulfate, enhance the natural enzyme activity, facilitating the combination of proteins, amino acids, and ascorbic acid. This action results in healthier growth of the plant, larger and fuller ears, heavier grain, and richer content in individual grains. In additionto raising the resistance of barley to disease,

1/2

APPROVED FOR RELEASE: 09/17/2001 CIA-RDP86-00513R002202410010-9"

"APPROVED FOR RELEASE: 09/17/2001 CIA-RDP86-00513R002202410010-9

USSR

PERESYPKIN, V. F., et al, Doklady Vsesoyuznoy Ordena Lenina Akademii Sel'skokhozyaystvennykh Nauk imeni V. I. Lenin, No 7, Jul 70, pp 5-7

the sulfates act as natural mineral nutrients, increasing the productivity of the grain through the mechanism of zymogenic interaction. They also increase the immunity of subsequent generations of the crop by a factor of 3-12 over that of the controls.

2/2

APPROVED FOR RELEASE: 09/17/2001 CIA-RDP86-00513R002202410010-9"

"APPROVED FOR RELEASE: 09/17/2001 CIA-RDP86-00513R002202410010-9

USSR

UDC 632.952:633.11

PERESYPKIN, V. F., PADUN, V. I., and PRONCHENKO, T. S., Ukrainian Scientific Research Institute of Plant Protection and All Union Scientific Research Institute of Chemical Plant Protective Agents

"Activity of Novel Fungicides Against the Stimulant of Wheat Smut"

Moscow, Khimiya v Sel'skom Khozyaystve, Vol 11, No 10 (120), 1973, pp 44-45

Abstract: Under field conditions benzoxan and pentoxan were slightly less active than the standard TMTD and granozan as fungicides against wheat smut. There was no difference observed between the standards and test agents as far as seed germination and formation of productive stems was concerned.

1/1

APPROVED FOR RELEASE: 09/17/2001 CIA-RDP86-00513R002202410010-9"

"APPROVED FOR RELEASE: 09/17/2001 CIA-RDP86-00513R002202410010-9

USSR

UDC 632.4.42/.49A./z

PERESYPKIN, V. F., and REBENKO, V. P., All Union Academy of Agricultural Sciences imeni V. I. Lenin, Moscow

"Dynamics of the Content of Nitrogen Compounds in Spring Barley in Relation to Resistance to Covered Smut"

Moscow, Sel'skokhozyaystvennaya Biologiya, Vol 5, No 6, 1970, pp 926-928

Abstract: A study was conducted on several varieties of spring barley differing with respect to their resistance to infection with Ustilago hordei, the agent of covered smut. Varieties with a high resistance to infection had a low content of total and protein nitrogen and a high content of non-protein nitrogen, as compared with varieties susceptible to infection. During infection with U. hordei, the content of total, protein, and non-protein nitrogen increased in barley plants. This increase was especially pronounced in plants of resistant varieties. Comparison of data pertaining to the relative content of nitrogen compounds in barley plants would aid in the selection of varieties resistant to covered smut.

1/1

APPROVED FOR RELEASE: 09/17/2001 CIA-RDP86-00513R002202410010-9"

"APPROVED FOR RELEASE: 09/17/2001 CIA-RDP86-00513R002202410010-9

JPRS 50516
DMUA 71

INTERNATIONAL SEMINAR ON RADIOCHEMISTRY

[Article by Candidate of Chemical Sciences V. F. Perel'rukhin; Moscow, Vestnik Akademii Nauk SSSR, Russian, Vol 40, No 12, December 1970, pp 93-94]

An international seminar on radiochemistry, organized by the Joint Nuclear Research Institute, was held from 29 September to 6 October in Dubna. About 150 radiochemists from 11 countries participated in it.

V. I. Spitsyn (USSR) presented an introductory report entitled "The Subject of radiochemistry and its problems"; in it he emphasized that radiochemistry has developed in a close connection with nuclear physics and radiation chemistry. He noted that contemporary radiochemistry is divided into applied (the processing of nuclear fuel, the obtaining of radioactive isotopes, the obtaining of radioactive isotopes and their use as tagging atoms, and the working out of methods of radiochemical analysis) and the theoretical, which in turn is subdivided into general radiochemistry and the chemistry of radioactive elements. The reporter related to general radiochemical work on the distribution of radioactive isotopes between different phases by methods of coprecipitation, extraction and ion exchange, and noted certain promising modifications of those methods. In the report there were generalizations of data on discoveries and refinements in the establishment of the valent forms of astatine (+7), neptunium (+7), plutonium (+7), americium (+2 and +7), berkelium (+3 and +4), mendelevium (+2 and +3), and nobelium (+2 and +3). V. I. Spitsyn proposed placing uranium in the sixth group of the periodic system, neptunium in the seventh, plutonium, americium and curium in the eighth, and the elements following up to the 103rd inclusively in the series of actinides, placed at the bottom of the table, below the family of lanthanides.

In the survey report of V. A. Karnaukhov (USSR) entitled "Problems and prospects of the synthesis of ultraheavy elements" the main attention was given to the analysis of theoretical

PERELRUKHIN, V. F.

APPROVED FOR RELEASE: 09/17/2001 CIA-RDP86-00513R002202410010-9"

"APPROVED FOR RELEASE: 09/17/2001 CIA-RDP86-00513R002202410010-9

USSR UDC 541.138 + 546.799.4

PERETRUKHIN, V. F., KROT, N. N., and GAL'MAN, A. D., Institute of Physical Chemistry, Academy of Sciences USSR

"Formal Redox Potentials of Hepta- and Hexavalent Plutonium in Alkaline Solutions"

Moscow, Izvestiya Akademii Nauk SSSR, Seriya Khimicheskaya, No 11, Nov 70, pp 2644-2645

Abstract: The authors measured (to ± 0.002 V) in 1-14 M NaOH the formal redox potentials E_0 for the pair Pu(VII)-PU(VI), as well as the pair Np(VII)-Np(VI). The results indicate that the oxidizing properties of heptavalent plutonium and neptunium decrease with increased alkali concentration. Neptunium (VII) is thermodynamically stable toward reduction with water at alkali concentrations in excess of 6 M NaOH, while Pu(VII) is unstable over the entire investigated range of alkali concentrations. The potentials of the pair Pu(VII)-Pu(VI) in 1-7 M NaOH are poorly reproducible and depend on the solution stirring rate.

1/1

APPROVED FOR RELEASE: 09/17/2001 CIA-RDP86-00513R002202410010-9"

"APPROVED FOR RELEASE: 09/17/2001 CIA-RDP86-00513R002202410010-9

1/2 028

UNCLASSIFIED

TITLE--KINETICS OF THE SPONTANEOUS OXIDATION OF URANIUM III IN CHLORIDE SOLUTIONS -U-

PROCESSING DATE--27NOV70

AUTHOR-(03)-PERETRUKHIN, V.F., KROT, N.N., GELMAN, A.D.

P

COUNTRY OF INFO--USSR

SOURCE--RADIOKHIMIYA 1970, 12(1), 96-101

DATE PUBLISHED-------70

SUBJECT AREAS--CHEMISTRY

TOPIC TAGS--URANIUM, CHLORIDE, CHEMICAL KINETICS, ACTIVATION ENERGY, OXIDATION

CONTROL MARKING--NO RESTRICTIONS

DOCUMENT CLASS--UNCLASSIFIED

PROXY REEL/FRAME--2000/1712

STEP NO--UR/0186/70/012/001/0096/0101

CIRC ACCESSION NO--AP0125333

UNCLASSIFIED

APPROVED FOR RELEASE: 09/17/2001 CIA-RDP86-00513R002202410010-9"

"APPROVED FOR RELEASE: 09/17/2001 CIA-RDP86-00513R002202410010-9

2/2 028 UNCLASSIFIED PROCESSING DATE--27NOV70

CIRC ACCESSION NO--AP0125333

ABSTRACT/EXTRACT--(U) GP-0- ABSTRACT. THE SPONTANEOUS OXION. OF U PRIME3PLUS IN AQ. CHLORIDE SOLNS IS A REACTION OF THE 1ST ORDER WITH RESPECTS TO U; AT 22DEGREES, THE HALF CONVERSION TIME T SUBONEHALF INCREASES FROM 0.45 TO 1360 AND THEN DECREASED TO 0.66 HR (THE RESP. VALUES OF THE APPARENT RATE CONST. OF THE REACTION K ARE 4.27 TIMES 10 PRIME NEGATIVE4, 1.4 TIMES 10 PRIME NEGATIVE7, AND 2.91 TIMES 10 PRIME NEGATIVE4 SEC PRIME NEGATIVE1) WHEN THE HCL CONCN. IS INCREASED FROM 10 PRIME NEGATIVE4.1 TO 0.2 TO 8.3M. RESP. AT A CONST. HCL CONCN. (0.5M), K INCREASES FROM 1.34 TIMES 10 PRIME NEGATIVE7 TO 1.6 TIMES 10 PRIME NEGATIVE4 SEC PRIME NEGATIVE1 (AND T ONE HALF DECREASES FROM 1040 TO 1.2 HR) WHEN THE LICL CONCN. IN THE SOLN. IS INCREASED FROM 0 TO 9.5M. A 10DEGREE INCREASE IN THE TEMP. INCREASES THE VALUE OF K BY A FACTOR OF 2 AND 1.7 IN 0.5 AND 6.0M HCL SOLNS., RESP.; THE CALCD. ACTIVATION ENERGIES FOR THE SPONTANEOUS OXION. IN 0.5 AND 6.0M HCL ARE 13 AND 9.9 KCAL-MOLE, RESP.

UNCLASSIFIED

APPROVED FOR RELEASE: 09/17/2001 CIA-RDP86-00513R002202410010-9"

"APPROVED FOR RELEASE: 09/17/2001 CIA-RDP86-00513R002202410010-9

1/2 017 UNCLASSIFIED PROCESSING DATE--27NOV70

TITLE--EFFECT OF ANIONS ON THE KINETICS OF THE SPONTANEOUS OXIDATION OF URANIUM III IN AQUEOUS SOLUTIONS -U-

AUTHOR-(03)-PERETRUKHIN, V.F., KROT, N.N., GELMAN, A.D.

COUNTRY OF INFO--USSR

P

SOURCE--RADIOKHIMIYA 1970, 12(1), 101-5

DATE PUBLISHED--------70

SUBJECT AREAS--CHEMISTRY

TOPIC TAGS--OXIDATION, URANIUM, AQUEOUS SOLUTION, ANION

CONTROL MARKING--NO RESTRICTIONS

DOCUMENT CLASS--UNCLASSIFIED

PROXY REEL/FRAME--2000/1713 STEP NO--UR/0186/70/012/001/0101/0105

CIRC ACCESSION NO--AP0125334

UNCLASSIFIED

APPROVED FOR RELEASE: 09/17/2001 CIA-RDP86-00513R002202410010-9"

"APPROVED FOR RELEASE: 09/17/2001 CIA-RDP86-00513R002202410010-9

2/2 017 UNCLASSIFIED PROCESSING DATE--27NOV70

CIRC ACCESSION NO--AP0125334

ABSTRACT/EXTRACT--(U) GP-0- ABSTRACT. THE APPARENT RATE CONST. OF SPONTANEOUS OXIDN. OF U PRIME 3PLUS (K) IN 0.5 AND 6.0M HCLO SUB4, 0.25 AND 4.0M H SUB2 SO SUB4, 0.5 MOLAR HCL, 0.5 MOLAR HCL CONTG. CH SUB3 COOH (1 MOLE-1), 1.34 M AC O PRIME NEGATIVE SOLN. AT PH 2; ACO PRIME NEGATIVE AT PH 4.5, ACO PRIME NEGATIVE CONTG. (NH SUB4) SUB2 SO SUB4 (0.5 MOLE-1.) AT PH 4.3, AND 1.3 M ACETATE SOLN. CONTG. EDTA (0.03 MOLE-1.) AT PH 4.3, AT 22DEGREES, HAS VALUES OF 1.81 TIMES 10 PRIME NEGATIVE5, 8.7 TIMES 10 PRIME NEGATIVE4, 8.52 TIMES 10 PRIME NEGATIVE7, 4.66 TIMES 10 PRIME NEGATIVE5, 1.8 TIMES 10 PRIME NEGATIVE7, 1.9 TIMES 10 PRIME NEGATIVE 7, 3.8 TIMES 10 PRIME NEGATIVE6, 1.91 TIMES 10 PRIME NEGATIVE3, 3.75 TIMES 10 PRIME NEGATIVE4 AND 3.8 TIMES 10 PRIME NEGATIVE3 SEC PRIME NEGATIVE1, RESP. IN THE HCLO SUB4 AND H SUB2 SO SUB4 SOLNS., AN INCREASE IN THE TEMP. TO 57-61DEGREES INCREASES THE VALUE OF K BY NEARLY 2 ORDERS OF MAGNITUDE. THE ADDN. OF RONGALITE TO 0.5 M HCL INCREASES SOMEWHAT THE RATE OF OXIDN. OF U PRIME 3PLUS, WHILE THE ADDN. OF AMMONIUM OXALATE TO DIL. CH SUB3 COOH SOLNS. CAUSES INSTANTANEOUS OXIDN. OF THE U PRIME 3PLUS TO U PRIME 4PLUS. THE ENERGY OF ACTIVATION FOR THE OXIDN OF U PRIME 3PLUS IN HCLO SUB4 AND H SUB2 SO SUB4 SOLNS. IS 22 AND 13 KCAL-MOLE, RESP.

UNCLASSIFIED

APPROVED FOR RELEASE: 09/17/2001 CIA-RDP86-00513R002202410010-9"

"APPROVED FOR RELEASE: 09/17/2001 CIA-RDP86-00513R002202410010-9

USSR UDC 542.943:546.791.3

~~PERETRUKHIN, V. F.~~, KROT, N. N., GEL'MAN, A. D.

"Kinetics of Spontaneous Oxidation of Trivalent Uranium in Chloride Solutions"

Leningrad, Radiokhimiya, Vol 12, No 1, 1970, pp 96-101

Abstract: A kinetic study was made of spontaneous oxidation of uranium (III) at room temperature in chloride solutions in the absence of oxygen in the acidity range from pH = 4.1 to 8.3 M HCl, as well as in 0.5 M HCl with a varying LiCl concentration from 0 to 9.5 M. In each case the reaction rate constant K was calculated, as well as the oxidation half-life of trivalent uranium $T_{1/2}$, connected with the constant by the simple relation $T_{1/2}$ = ln 2/K. It was found that under all the investigated conditions the reaction has a first order according to uranium (III) and is complexly dependent on the hydrogen and chloride ion concentration. The oxidation rate is minimal in 0.2-0.5 M HCl (1.5 percent uranium (III) in 24 hours) and increases with an increase in HCl concentration from 0.2 to 8.3 M, as well as with a decrease

1/2

APPROVED FOR RELEASE: 09/17/2001 CIA-RDP86-00513R002202410010-9"

"APPROVED FOR RELEASE: 09/17/2001 CIA-RDP86-00513R002202410010-9

USSR

PERETRUKHIN, V. F., et al., Radiokhimiya, Vol 12, No 1, 1970, pp 96-101

in acidity to pH = 3-4. The oxidation rate also increases with additions of lithium chloride. The reaction rate constants were not found to be heavily dependent on temperature. With a 10°C rise in temperature there is a 1.7-fold increase in the reaction rate in 6 M HCl and not more than a 2-fold increase in 0.5 M HCl. The activation energy was found to be 9.9 kcal/mole for 6 M HCl and not more than 13 kcal/mole for 0.5 M HCl. The oxidation rate in chloride solutions is especially great under conditions where uranium (III) occurs in hydrolyzed or complex forms.

2/2

APPROVED FOR RELEASE: 09/17/2001 CIA-RDP86-00513R002202410010-9"

"APPROVED FOR RELEASE: 09/17/2001 CIA-RDP86-00513R002202410010-9

USSR

ZAKHAROVA, A. N., PETROV, D. M., and SAMORODOVA, G. A. UDC 621.385.623.4

"Evaluation of Klystron-Type Accelerators and Transit Klystrons"

Elektron. tekhnika. Nauch.-tekhn. sb. Elektron SVCh (Electronics Technology. Scientific-Technical Collection. Microwave Electronics), 1971, Issue 4, pp 47-62 (from RZh-Elektronika i yeye primeneniye, No 8, August 1971, Abstract No 8A180)

Translation: For an analysis of phenomena in transit klystrons and electron accelerators of the klystron type and their evaluation, relativistic nonlinear equations for the motion of electrons are formulated, taking account of the space charge based on a disk (1-dimensional) model of an electron stream. The problem of excitation of the cavity and the takeoff of energy is solved on the basis of the balance of the active and reactive powers for any amplitude of the microwave fields, taking account of the processes connected with turning of the electrons. A program is formulated for solution of these equations on a computer, which makes it possible to calculate the output characteristics of the devices. In the program, optimization of the output characteristics with respect to a large number of parameters is provided. Some results are presented of an evaluation of 4-cavity klystron amplifiers and 4-cavity electron accelerators. 17 ref. Summary.

1/1

APPROVED FOR RELEASE: 09/17/2001 CIA-RDP86-00513R002202410010-9"

"APPROVED FOR RELEASE: 09/17/2001 CIA-RDP86-00513R002202410010-9

USSR

UDC 621.385.623.4

BORISOV, L.M., ZAKHAROVA, A.N., YEVTUSHENKO, O.V., ZHARYY, YE. V., KAUFMAN, G.M., PETROV, D.M., SAMORODOVA, G.A.

"Experimental Television Klystron With High Efficiency"

Elektron. tekhnika. Nauchno-tekhn. sb. Elektron. SVCh (Electronic Technology. Scientific-Technical Collection. Microwave Electronics), 1970, No 7, pp 160-162 (from RZh--Elektronika i yeye primeneniye, No 11, November 1970, Abstract No 11A126)

Translation: The development is reported of an experimental klystron, the parameters of which were optimized for a specified current and voltage with the aid of an electronic computer. The electronic efficiency of the klystron produced amounts to 70 percent. With an amplification band of 1.3 percent and a shift of the maximum amplitude-frequency characteristic to the low-frequency side, the maximum efficiency (with respect to power in the load) exceeds 60 percent with an amplification factor of 40 db. Summary.

1/1

APPROVED FOR RELEASE: 09/17/2001 CIA-RDP86-00513R002202410010-9"

"APPROVED FOR RELEASE: 09/17/2001 CIA-RDP86-00513R002202410010-9

USSR

UDC 632.95

PERESEDOV, V. P., PREOBRAZHENSKAYA, E. L., and ZASEDATELEVA, G. V.

"Toxicity of New Pesticide Dibrom"

Tr. Volgogr. med. in-ta (Works of Volgograd Medical Institute), Vol 24, 1971, pp 194-197 (from Referativnyy Zhurnal -- Khimiya, Svodnyy Tom (I, L-S), No 1(II), 1973, Abstract No 1N447 by T. A. Belyayeva)

Translation: The LD_{50} amounts to 440 ± 17 and 465 ± 17 mg/kg for white mice and rats, respectively, when administered perorally. The acute poisoning of animals is accompanied by activation of the choline-reactive systems. In the case of subcutaneous application the LD_{50} is 1234 ± 70 and 1200 ± 63 mg/kg for white rats and rabbits, respectively. The cummulation coefficient of dibrom is 3.6. The new pesticide possesses anticholinesterase activity.

1/1

APPROVED FOR RELEASE: 09/17/2001 CIA-RDP86-00513R002202410010-9"

"APPROVED FOR RELEASE: 09/17/2001 CIA-RDP86-00513R002202410010-9

AA0046285

PERETYAGIN, I.N.

UR 0482

Soviet Inventions Illustrated, Section II Electrical, Derwent, 1/70

242748 GROUP DELAY TIME MEASURING DEVICE, in which a low frequency voltage from the generator (2) and a high frequency voltage from the generator (3) are applied to the input of a balanced mixer (1) which suppresses the carrier frequency, so that a two-frequency signal appears at its output.

This signal is applied to the dispersion delay line (4) and to the detector (5) which isolates the envelope of the two-frequency signal. The filter (6) isolates the envelopes first harmonic, which is applied to a phase detector (7) input.

The two-frequency signal is applied from the dispersion delay line (4) output to the detector (8) which isolates its envelope. The filter (9) is tuned to the envelope first harmonic which is applied from its output to the phase detector (7) second input. The frequency meter (10) measures the two-frequency signal mean frequency. As the

V

1/3

4

19781433

APPROVED FOR RELEASE: 09/17/2001 CIA-RDP86-00513R002202410010-9"

"APPROVED FOR RELEASE: 09/17/2001 CIA-RDP86-00513R002202410010-9

AA0046285

signal mean frequency varies, the group delay time also varies. A control voltage appears at the detector (7) output which is proportional to the envelopes phase difference. It controls the generator (2) frequency so that the phase difference again becomeszero. Then the group delay time is equal to n periods of the difference frequency. 13.2.98 as 1217923/26-9.PERETYAGIN.I.V.L.A.GOVOROV ARTILLERY RADIOTECHNICAL ACADEMY (11.9.69) Bul 15/ 25.4.69. Class 83d. Int.Cl.G 04f.

Artilleriyskaya Radiotekhnicheskaya Akademiya Sovetskoy Armii im. Marshala Sovetskogo Soyuza L. A. Govorova

2/3

19781434

APPROVED FOR RELEASE: 09/17/2001 CIA-RDP86-00513R002202410010-9"

"APPROVED FOR RELEASE: 09/17/2001 CIA-RDP86-00513R002202410010-9

AA0046285

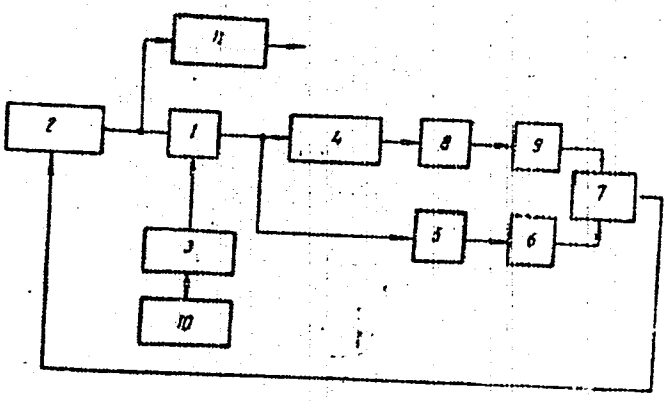

3/3

EB

19781435

APPROVED FOR RELEASE: 09/17/2001 CIA-RDP86-00513R002202410010-9"

"APPROVED FOR RELEASE: 09/17/2001 CIA-RDP86-00513R002202410010-9

USSR

UDC: 598.1

PEREVALOV, A.A., Tiraspoliskiy Pedagogical Institute

"New Formed Element in the Blood of Poisonous Snakes"

Kiev, Doklady Akademii nauk Ukrainskoy CSR, Seriya B, No 3, 1970, pp 269-271

Abstract: A unique formed element, distinct from others, was noted in blood smears of snakes. It was called viprocyte (for Vipera, a snake genus). In unstained smears it was oval, colorless, with a bright, large, round (not oval) nucleus 3.76 x 6.25 microns in diameter. On stained preparations the nucleus is always of deep cherry color, surrounded by a bright raspberry-colored double nuclear membrane with an interspace of 1.0 - 1.5 microns. From the outer membrane of the nuclear ring, 10-13 canaliculi radiate to the cytoplasmic membrane, giving the viprocyte its stellate appearance. The young viprocytes, 18.3 x 12.6 microns in diameters, have no canaliculi. Adult cells, 16.0 x 11.3 microns in diameter, have 1-10 canaliculi. Disintegrating cells, 13.6 x 9.7 microns, have 13 or more canaliculi which intertwine, the perinuclear membrane is contracted, and the cytoplasmic membrane is deformed and fractured in places. It should be noted, however, that if in a venomous snake there are 10-15 viprocytes for 1,000 erythrocytes, then in a non-venomous snake or a snake rendered non-venomous, the number of viprocytes is ten times less. Where are they generated and what is their function?

1/1

APPROVED FOR RELEASE: 09/17/2001 CIA-RDP86-00513R002202410010-9"

"APPROVED FOR RELEASE: 09/17/2001 CIA-RDP86-00513R002202410010-9

1/2 014 UNCLASSIFIED PROCESSING DATE--18SEP70

TITLE--EFFECT OF DECARBURIZATION ON THE RATE OF SULFUR AND PHOSPHORUS REMOVAL FROM IRON AND CARBON MELTS BY SOLID SLAGS -U-

AUTHOR-(03)-TRAVIN, O.V., PEREVALOV, N.N., ZHURAVLEV, V.M.

COUNTRY OF INFO--USSR

SOURCE--ZH. FIZ. KHIM. 1970, 44(1) 204-7

DATE PUBLISHED-------70

SUBJECT AREAS--MATERIALS

TOPIC TAGS--CAST IRON, DESULFURIZATION, PHOSPHORUS, SLAG, METAL MELTING, ALUMINA, LIME

CONTROL MARKING--NO RESTRICTIONS

DOCUMENT CLASS--UNCLASSIFIED

PROXY REEL/FRAME--1983/0942 STEP NO--UR/0076/70/044/001/0204/0207

CIRC ACCESSION NO--AP0053866

UNCLASSIFIED

APPROVED FOR RELEASE: 09/17/2001 CIA-RDP86-00513R002202410010-9"

"APPROVED FOR RELEASE: 09/17/2001 CIA-RDP86-00513R002202410010-9

2/2 014 UNCLASSIFIED PROCESSING DATE--18SEP70

CIRC ACCESSION NO--AP0053866

ABSTRACT/EXTRACT--(U) GP-0- ABSTRACT. THE EFFECT OF OXIDIZING PROCESSES ON THE RATE OF S AND P REMOVAL FROM THE CAST IRON MELTS BY ALUMINA AND FERRO LIME SLAGS IS INVESTIGATED. ADDNS. OF ORES TO THE MELTS IMPEDE DESULFURIZATION, BUT HAVE NO EFFECT ON DEPHOSPHORIZATION PROCESSES.

APPROVED FOR RELEASE: 09/17/2001 CIA-RDP86-00513R002202410010-9"

"APPROVED FOR RELEASE: 09/17/2001 CIA-RDP86-00513R002202410010-9

UDC 621.039.52:691.3

USSR

DUBROVSKIY, V.B., ZHOLDAK, G.I., KORENEVSKIY, V.V., PERGAMENSHCHIK, B.K., PEREVALOV, V.S.

"Concretes Using Iron-Ore Aggregates Under Conditions Of High Radiation--Temperature Loads"

V sb. Vopr. fiz. zashchity reaktorov (Problems Of Physical Shielding Of Reactors--Collection Of Works), Issue 5, Moscow, Atomizdat, 1972, pp 262-273 (from RZh:Yadernyye reaktory, No 6, June 1972, Abstract No 6.50.125)

Translation: Portland cement hematitic concrete has good protective properties even with an absence of water in it. It is sufficiently radiation resistant in the presence of cumulative doses up to $7 \cdot 10^{20}$ n/cm^2. A significant change of stability, modulus of deformation, thermal conductivity, and coefficient of temperature expansion is not displayed. The expansion is discussed of concrete during irradiation which reaches 1--2 percent (linear) with a cumulative dose of $(2--7) \cdot 10^{20}$ n/cm^2, which it is necessary to take into account during planning of the construction of shielding from this material. With a temperature close to 1000° C portland cement hermatitic concrete preserves its properties to a sufficient degree. It is shown experimentally that it is possible to use such concrete in shielding at temperatures up to 800° C. 5 ill. 5 tab. 6 ref.

1/1

APPROVED FOR RELEASE: 09/17/2001 CIA-RDP86-00513R002202410010-9"

"APPROVED FOR RELEASE: 09/17/2001 CIA-RDP86-00513R002202410010-9

USSR

UDC 542.957+541.57+546.59+546.26

PEREVALOVA, E. G., BAUKOVA, T. V., GORYUNOV, Ye. I., and GRANDBERG, K. I., Institute of Organoelemental Compounds, Academy of Sciences of the USSR

"Splitting of the Gold-Carbon Bond in Phenylgold Triphenylphosphine"

Moscow, IAN SSSR, Seriya Khimicheskaya, No 9, Sep 70, pp 2,148-2,150

Abstract: The authors invested the reactivity of the Au-C bond in phenylgold triphenylphosphine. It was found that interaction of hydrogen chloride gas, or aqueous and alcohol solutions of hydrogen chloride with a benzene solution of phenylgold triphenylphosphine (I) produces gold chloride triphenylphosphine (II).

Reaction of concentrated hydrogen bromide and hydrogen iodide solutions with (I) gives gold bromide triphenylphosphine and gold iodide triphenylphosphine in quantitative yields. Reaction of (I) with halogens at 15°C also breaks the Au-C bond with the formation of triphenylphosphine complexes of halide salts of univalent gold.

The bond is also broken by acetyl chloride, trifluoracetic acid anhydride and

1/2

APPROVED FOR RELEASE: 09/17/2001 CIA-RDP86-00513R002202410010-9"

"APPROVED FOR RELEASE: 09/17/2001 CIA-RDP86-00513R002202410010-9

USSR

PEREVALOVA, E. G., et al, IAN SSSR, Seriya Khimicheskaya, No 9, Sep 70, pp 2,148-2,150

mercuric chloride. However, it was found that the Au-C bond is resistant to alkaline agents. The phenyl radical formed by splitting of the bond will be studied in a future paper.

2/2

APPROVED FOR RELEASE: 09/17/2001 CIA-RDP86-00513R002202410010-9"

"APPROVED FOR RELEASE: 09/17/2001 CIA-RDP86-00513R002202410010-9

USSR

UDC 547.13

PEREVALOVA, E. G., LEMENOVSKIY, D. A., BAUKOVA, T. V., SMYSLOVA, YE. I., GRANDBERG, K. I., and NESMEYANOV, A. N., Moscow State University imeni M. V. Lomonosov

"Reaction of Ferrocenyl- and Phenyl(triphenylphosphine)gold with Electrophilic Reagents"

Leningrad, Doklady Akademii Nauk SSSR, Vol 206, No 4, Oct 72, pp 883-996

Abstract: Reactions of ferrocenyl- and phenyl(triphenylphosphine)gold with electrophilic reagents was studied. No electrophilic substitution at the gold atom took place in these reactions, the products indicating that a homolytic process occurred in these reactions. For example, when gerrocenyl-(triphenylphosphine)gold reacted with acetic anhydride or acyl chlorides of acetic or trichloroacetic acids, only ferrocene, biferrocenyl and a salt of the composition $XAuP(C_6H_5)_3$ where X = Cl or $OCOCH_3$ were formed. No acyl-ferrocene was isolated. Analogous reactions occur with phenyl(triphenyl-phosphine)gold, no electrophilic substitution taking place. The results obtained can be explained by the single electron transfer mechanism, this being the first step in a series of reactions. The electron from the C-Au bond is transferred to the splitting reagent, which acts as an electron acceptor.

1/1

APPROVED FOR RELEASE: 09/17/2001 CIA-RDP86-00513R002202410010-9"

"APPROVED FOR RELEASE: 09/17/2001 CIA-RDP86-00513R002202410010-9

USSR

UDC 541.49:547.558.1:547.355.9

NESMEYANOV, A. N., PEREVALOVA, E. G., KRIVYKH, V. V., KOSIMA, A. N., FRAND-BERG, K. I., and SMYSLOVA, E. I., Moscow State University imeni M. V. Lomonosov

"Triphenylphosphine Complexes of Benzyl- and Vinylgold"

Moscow, Izvestiya Akademii Nauk SSSR, Seriya Khimicheskaya, No 3, 1972, pp 653-654

Abstract: Alkyl and aryl compounds of monovalent gold are stable only in the form of triphenylphosphine complexes. The benzyl compound was synthesized according to the reaction

$$C_6H_5CH_2MgCl + Cl\,Au \cdot P\,(C_6H_5) \longrightarrow C_6H_5CH_2Au \cdot P\,(C_6H_5)_3$$

The yield was 85% in toluene and 40% in tetrahydrofuran. The nmr spectrum of the product indicated a proton signal in the phenyl group (in the range of 6.9-7.3 m.d.) and two signals from the methylene group (in the range of 2.54 to 2.76 m.d.). By using the double nuclear magnetic resonance of H^1-P^{31}, it was shown that the interaction of the protons from the methylene group with phosphorus caused peak splitting. The vinyl compound was obtained from the reaction

$$CH_2 = CHMgBr + Cl\,Au \cdot P\,(C_6H_5)_3 \xrightarrow[50^\circ]{THF} CH_2 = CH\,Au \cdot P\,(C_6H_5)_3$$

The yield was 90%. 1/1

APPROVED FOR RELEASE: 09/17/2001 CIA-RDP86-00513R002202410010-9"

"APPROVED FOR RELEASE: 09/17/2001 CIA-RDP86-00513R002202410010-9

Organometallic Compounds

USSR

UDC 247.13

PEREVALOVA, E. G., LEMENOVSKIY, D. A., GRANDBERG, K. I., and NESMEYANOV, A. N., Moscow State University imeni M. V. Lomonosov

"Ferrocenylgoldtriphenylphosphine Complexes With Monovalent Gold Salts"

Moscow, Doklady Akademii Nauk SSSR, Vol 202, No 1, Jan-Feb 72, pp 93-96

Abstract: Reacting hydroborofluoric acid with ferrocenylgoldtriphenylphosphine (I) yields the borofluoride of (triphenylphosphineferrocenylgold)-triphenylphosphinegold (II). Excess of HBF_4 shows no particular effect on the reaction course or on the yield. PMR spectrum of (II) resembles the spectra of ferrocenylcarbcations. The data of NMR and UV spectroscopy indicate that a considerable positive charge is located on the gold atom next to the cyclopentadienyl ring in the compound (II). Compound (II) is believed to be monovalent gold borofluoride bound with two stabilizing ligands - triphenylphosphine and ferrocenylgold triphenylphosphine; the positive charge is evidently delocalized between the gold atoms. Compound (II) is also obtained by reacting (I) with $(C_6H_5)_2Fe^+BF_4^-$, $NO_2^+BF_4^-$, $CH_3CO^+BF_4^-$, except that with these reagents their excess lowers the yield of (II). Reacting (I) with concentrated H_2SO_4 produces

1/2

APPROVED FOR RELEASE: 09/17/2001 CIA-RDP86-00513R002202410010-9"

"APPROVED FOR RELEASE: 09/17/2001 CIA-RDP86-00513R002202410010-9

USSR

PEREVALOVA, E. G., et al., Doklady Akademii Nauk SSSR, Vol 202, No 1, Jan-Feb 72, pp 93-96

the sulfate analogue of the compound (II), somewhat less stable than the borofluoride complex. The UV and PMR spectra of the sulfates are identical with those of the borofluorides.

2/2

APPROVED FOR RELEASE: 09/17/2001 CIA-RDP86-00513R002202410010-9"

"APPROVED FOR RELEASE: 09/17/2001 CIA-RDP86-00513R002202410010-9

Organometallic Compounds

USSR

UDC 547.13

GRANDBERG, K. I., BAUKOVA, T. V., PEREVALOVA, E. G., NESMEYANOV, A. N., Academician, Moscow State University imeni M. V. Lomonosov

"[ρ-Tolyl-(triphenylphosphine)-gold]-triphenylphosphinegold Borofluoride"

Moscow, Doklady Akademii Nauk SSR, Vol 206, No 6, 1972, pp 1355-1358

Abstract: The synthesis of [ferrocenyl-(triphenylphosphine)-gold]triphenylphosphinegold borofluoride (I) -- a new type of organogold compound containing two gold atoms per molecule -- was reported earlier [E. G. Perevalova, et al., DAN., Vol 202, 97, 1972]. The formation of this type of complex is not a specific property of ferrocenyl-(triphenylphosphine)-gold. Organogold compounds of the benzene series -- ρ-tolyl-(triphenylphosphine)-gold (II) and phenyl-(triphenylphosphine)-gold (III) -- also react with HBF_4 yielding similar complexes; ρ-tolyl-(triphenylphosphine)-gold was obtained from ρ-tolyllithium and the triphenylphosphine complex of gold chloride. The reaction of II and III with an ether solution of HBF_4 leads to the formation of borofluorides of [ρ-tolyl-(triphenylphosphine)-gold]-triphenylphosphinegold (IV) and [phenyl-tripenylphosphine)-gold]-triphenylphosphinegold (V), respectively. The auriferous ligand $CH_3C_6H_4 \cdot Au \cdot P(C_6H_5)_3$ in

1/2

APPROVED FOR RELEASE: 09/17/2001 CIA-RDP86-00513R002202410010-9"

"APPROVED FOR RELEASE: 09/17/2001 CIA-RDP86-00513R002202410010-9

USSR

GRANDBERG, K. I., et al., Doklady Akademii Nauk SSSR, Vol 206, No 6, 1972, pp 1355-1358

combination with IV is easily replaced by other electron donor ligands — triphenylphosphine, morpholine, ferrocenyl-(triphenylphosphine)-gold. In the presence of an aqueous solution of sodium chloride, II and the triphenylphosphine complex of gold fluoride are formed. The paramagentic resonance spectra and ultraviolet spectroscopic data of some of the above organogold compounds were analyzed. The experimental procedures and results for the reaction HBF_4 and II, HBF_4 and phenyl-(triphenylphosphine)-gold, an aqueous solution of sodium chloride and IV, IV and triphenylphosphine, IV and ferrocenyl-(triphenylphosphine)-gold, IV and morpholine, and IV and ferrocenyl-(triphenylphosphine)-gold are described.

2/2

APPROVED FOR RELEASE: 09/17/2001 CIA-RDP86-00513R002202410010-9"

"APPROVED FOR RELEASE: 09/17/2001 CIA-RDP86-00513R002202410010-9

USSR

UDC 542.957:547.559.59'118:547.284.3

NESMEYANOV, A. N., GRANDBERG, K. I., SMYSLOVA, YE. I., and PEREVALOVA, E. G.,
Moscow State University Imeni M. V. Lomonosov

"Triphenylphosphinegoldacetone"

Moscow, Izvestiya Akademii Nauk SSSR, Seriya Khimicheskaya, No 10, Oct 72,
p 2375

Abstract: Reaction of vinylgoldtriphenylphosphine with an acetone solution of potassium permanganate at 0° yields triphenylphosphinegoldacetone (I). HCl, $HgCl_2$ and Br_2 add to (I) in the 1,2-position, while acetyl chloride reacts via 1,4-addition yielding isopropenylacetate and triphenylphosphinegold chloride.

1/1

APPROVED FOR RELEASE: 09/17/2001 CIA-RDP86-00513R002202410010-9"

"APPROVED FOR RELEASE: 09/17/2001 CIA-RDP86-00513R002202410010-9

Steels

USSR

UDC 621.785.533:669.018.8

POPOV, I. N., PEREVERSEV, V. M., KOROLEV, P. G., ZHEREBKIN, O. A., and NESTERENKO, V. I., Kursk Polytechnic Institute

"Cyclic Strength and Residual Stresses of Nitrocemented Steel Containing Chromium and Nickel"

Moscow, Izvestiya Vysshikh Uchebnykh Zavedeniy, Chernaya Metallurgiya, No 3, 1973, pp 152-154

Abstract: The fatigue strength and residual stresses of 20KhGSNT nitrocemented steel containing chromium and nickel were experimentally investigated. The fatigue strength on bending after nitrocementation did not decrease, in comparison with cementation and temper hardening by repeated heating. The high value of the endurance limit of 20KhGSNT nitrocemented steel is a function of the presence on the surface of the nitrocemented layer of compressive residual principal stresses, determined with the help of the "PION 2" device. The presence of compressive residual stresses on the metal surface results also from the analysis of sources of fatigue failures. Two figures, five bibliographic references.

1/1

APPROVED FOR RELEASE: 09/17/2001 CIA-RDP86-00513R002202410010-9"

"APPROVED FOR RELEASE: 09/17/2001 CIA-RDP86-00513R002202410010-9

USSR UDC 669.112.3

PEREVERSEVA, YE. G., SOKOLOV, K. N., KUDRYAVTSEVA, L. N., and GRISHKO, V. F., Zhdanov Metallurgical Institute

"Effect of Arsenic on the Diffusion of Carbon in Austenite and Ferrite of Low-Carbon Steel"

Moscow, Izvestiya Vysshikh Uchebenykh Zavedeniy -- Chernaya Metallurgiyam No 2, 1970, pp 110-113

Translation: A study was made of the effect of arsenic on the diffusion of carbon in austenite and ferrite. It was established that arsenic increases the rate of carbon diffusion in these structural constituents. With an increase in the content of arsenic from 0 to 1%, the activation energy of St. 3 steel in austenite changes from 35,900 to 31,600, respectively, and in ferrite -- from 18,800 to 16,00 cal/g-atom.

1/1

APPROVED FOR RELEASE: 09/17/2001 CIA-RDP86-00513R002202410010-9"

"APPROVED FOR RELEASE: 09/17/2001 CIA-RDP86-00513R002202410010-9

USSR UDC 669.24'784:669.25'784:523.612

NAYDICH, YU. V., PEREVERTAYLO, V. M., and NOVODNIK, G. M.

"Surface Properties of Ni-C and Co-C Melts"

Moscow, Izvestiya Akademii Nauk SSSR, Metally, No 2, Mar-Apr 72, pp 87-90

Abstract: Surface tension and density of Ni-C and Co-C melts were determined by the "large drop" method. Electrolytic nickel and cobalt, previously remelted in a vacuum with an electron beam, were placed in Al_2O_3 or BeO cups which contained a graphite substrate. Carbon from the substrate mixed with the molten nickel or cobalt to form a hypereutectic concentration from which the equilibrium concentration of carbon along the liquidus line could be calculated in the 1310-1600°C interval.

Polytherms of the investigated melts showed that carbon significantly lowers the surface tension of both Co-C and Ni-C melts. This lowering of surface tension for metals of the iron group was attributed to the molecular-statistical theory of adsorption. The following ratios were extracted from plotted data: 370/5.5, 327/3.6, 341/2.8, where the first number is the magnitude of surface tension lowering (dynes/cm) and the second number is the percent of carbon introduced into the melt for Fe, Co, and Ni, respectively. One figure, 11 bibliographic references.

1/1

APPROVED FOR RELEASE: 09/17/2001 CIA-RDP86-00513R002202410010-9"

"APPROVED FOR RELEASE: 09/17/2001 CIA-RDP86-00513R002202410010-9

Graphite

USSR

UDC 541.183+669.245

NAYDICH, Yu. V., PEREVERTAYLO, V. M., and NEVODNIK, G. M., Institute of Problems of Material Science, Academy of Sciences UkrSSR

"Study of the Wettability of Graphite by Nickel in Connection With the Process of Carbon Solution in the Liquid Phase"

Kiev, Poroshkovaya Metallurgiya, No 1 (97), Jan 71, pp 58-61

Abstract: A study was made of the wettability in the system made up of graphite, nickel, and carbon melt as a function of the carbon concentration in the liquid phase from zero to equilibrium and also as a function of widely varying temperatures. The experimental procedure is described, and the results are discussed. By studying the concentration and temperature dependence of wettability of graphite by liquid nickel-carbon alloys in the trans-eutectic region, it was demonstrated that the degree of deviation of the system from equilibrium has a significant effect on wettability of the solid state. The quantitative nature of this relation was established. Wettability is appreciably higher in the nonequilibrium contact system than at equilibrium. Graphs are presented showing the contact wetting angles of graphite with nickel (I) and saturated Ni-C alloys in the trans-eutectic

1/2

APPROVED FOR RELEASE: 09/17/2001 CIA-RDP86-00513R002202410010-9"

"APPROVED FOR RELEASE: 09/17/2001 CIA-RDP86-00513R002202410010-9

USSR

NAYDICH, Yu. V., et al, Poroshkovaya Metallurgiya, No 1 (97), Jan 71, pp 58-61

region as a function of temperature from 1,300 to 1,600°C, the concentration dependence of the wetting contact angle of graphite by nickel-carbon alloys at 1,250°C, and the relation of the degree of wettability to the deviation of the system from the equilibrium state. With an increase in carbon content in liquid nickel from zero to saturation (2.68 wt %), the values of the wetting contact angles increase from 49 to 115° at 1,550°C. Addition of carbon to ~1 wt % has practically no effect on the magnitude of the wetting angle, and only further addition of carbon in the melt causes a sharp increase in this angle. Thus, the high degree of wetting of graphite by nickel is caused by the process of carbon solution in the liquid metal under the effect of the difference in chemical potentials of the carbon in the solid and liquid phases in accordance with the general interpretation of such phenomena.

2/2

APPROVED FOR RELEASE: 09/17/2001 CIA-RDP86-00513R002202410010-9"

"APPROVED FOR RELEASE: 09/17/2001 CIA-RDP86-00513R002202410010-9

USSR

UDC: 621.317.335.3

PEREVERTEN', V. I., GLADYSHEV, G. I.

"Accounting for Systematic Errors in the Measurement of Electromagnetic Parameters of Materials by a 'Quasidielectric' Cavity Method"

Dokl. Vses. nauchno-tekhn. konferentsii po radiotekhn. izmereniyam. T. 1 (Reports of the All-Union Scientific and Technical Conference on Radio Engineering Measurements. Vol. 1), Novosibirsk, 1970, pp 101-102 (from RZh-Radiotekhnika, No 1, Jan 71, Abstract No 1A352)

Translation: The authors note the promise of "quasidielectric" cavity methods of measuring the electromagnetic parameters of substances in the microwave band, i. e. methods which utilize an open resonator with flat metal reflectors which enclose a circular cylindrical specimen. However, the measurement precision of these methods is limited by the presence of appreciable systematic errors which depend on the coupling impedance introduced and also on the clearance between specimen and reflector. It is very difficult to account for these errors theoretically, but they may easily be accounted for experimentally during the measurement process. The appropriate

1/2

APPROVED FOR RELEASE: 09/17/2001 CIA-RDP86-00513R002202410010-9"

"APPROVED FOR RELEASE: 09/17/2001 CIA-RDP86-00513R002202410010-9

USSR

PEREVERTEN', V. I., GLADYSHEV, G. I., Dokl. Vses. nauchno-tekhn. konferentsii po radiotekhn. izmereniyam. T. 1., 1970, pp 101-102.

procedure is given. A schematic diagram is presented for an installation on which the permittivity and loss angle of dielectrics were measured in the 3-cm and 2-mm bands, as well as the results of measurement of the parameters of some materials with indication of errors as determined by the proposed method. E. L.

2/2

APPROVED FOR RELEASE: 09/17/2001 CIA-RDP86-00513R002202410010-9"

"APPROVED FOR RELEASE: 09/17/2001 CIA-RDP86-00513R002202410010-9

1/2 029 UNCLASSIFIED PROCESSING DATE--04DEC70

TITLE--INFLUENCE OF PRESSURE AND THE RATE OF PRESSING OF THERMOSETTING PLASTICS ON THE PHYSICOMECHANICAL PROPERTIES OF THE MANUFACTURED GOODS

AUTHOR-(02)-SOKOLOV, A.D., PEREVERTOV, A.S.

COUNTRY OF INFO--USSR

SOURCE--FIZ.-KHIM. MEKH. MATER. 1970, 6(2), 90-4

DATE PUBLISHED--------70

SUBJECT AREAS--MATERIALS

TOPIC TAGS--BENDING STRENGTH, THERMOPLASTIC MATERIAL, PRESSURE EFFECT, PLASTIC FABRICATION, COMPRESSIVE STRESS

CONTROL MARKING--NO RESTRICTIONS

DOCUMENT CLASS--UNCLASSIFIED

PROXY FICHE NO----FD70/605012/E08 STEP NO--UR/0369/70/006/002/0090/0094

CIRC ACCESSION NO--AP0140316

UNCLASSIFIED

APPROVED FOR RELEASE: 09/17/2001 CIA-RDP86-00513R002202410010-9"

"APPROVED FOR RELEASE: 09/17/2001 CIA-RDP86-00513R002202410010-9

2/2 029 UNCLASSIFIED PROCESSING DATE--04DEC70

CIRC ACCESSION NO--AP0140316

ABSTRACT/EXTRACT--(U) GP-0- ABSTRACT. THE BENDING STRENGTH (SIGMA) OF THERMOPLASTICS INCREASES WITH THEIR D. AND THE DEGREE OF HARDENING. THE INCREASE OF THE COMPRESSION RATE DURING MOLDING DECREASES THE RATE OF THE D. INCREASE. THE INCREASE OF THE MOLDING TEMP. INCREASES THE D. INCREASE RATE. THE OPTIMUM MOLDING TEMP. FOR PHENOLBASED COMPONS. IS 120DEGREES. HOLDING THESE MATERIALS UNDER COMPRESSION INCREASES THEIR D. AND SIGMA. FACILITY: L'VOV. POLITEKH. INST., LVOV, USSR.

UNCLASSIFIED

APPROVED FOR RELEASE: 09/17/2001 CIA-RDP86-00513R002202410010-9"

"APPROVED FOR RELEASE: 09/17/2001 CIA-RDP86-00513R002202410010-9

USSR

PEREVERTUN, M. A.

UDC 536.24:532.526

"Thermal Emission of a Horizontal Plate in a Medium"

Nauch. tr. Kazakhsk. politekhn. in-t (Scientific Works. Kazakh Polytechnical Institute), Alma-Ata, 1971, pp 154-156 (from RZh-Mekhanika, No 6, Jun 72, Abstract No 6B798)

Translation: An engineering calculation is given for the formal emission of a heated plate in air under the assumption of satisfaction of the criterial equation for the Nusselt number $N = c(GP)^n$, where c and n are empirical coefficients, G is the Grashof number and P is the Prandtl number. The values of the coefficients for $GP < 500$ are $c = 1.8$ and $n = 0.125$ (the region of the heat conducting mode). This mode of heat release corresponds to the case of heated conductors with a temperature difference up to 20°. In the region $500 < GP < 2 \cdot 10^7$ it is assumed that $n = 0.25$. Calculations shown in a table are presented for this region. The calculations lead to the conclusion that a horizontal plate loses ~80% of its energy by means of convection and ~20% is ascribed to thermal conductivity and radiant emission. Ye. L. Tarunin.

1/1

APPROVED FOR RELEASE: 09/17/2001 CIA-RDP86-00513R002202410010-9"

"APPROVED FOR RELEASE: 09/17/2001 CIA-RDP86-00513R002202410010-9

Mining, Petroleum, Geological

USSR

UDC: 622.011.43

BRICHKIN, A. V., GENBACH, A. N., PEREVERTUN, V. V., ROSLYAKOVA, T. V.

"Concerning the Mechanism of Thermal and Thermomechanical Methods of Rock Destruction"

Nauch. tr. Kazakhsk. politekhn. in-t (Scientific Works. Kazakh Polytechnical Institute), Alma-Ata, 1971, pp 392-396 (from RZh-Mekhanika, No 5, May 72, Abstract No 5V586)

Translation: It is noted that solid rocks are intensively destroyed by a heat flux (jet). In porous rocks with a strongly developed crack structure, destruction by the thermal method takes place slowly and unsteadily. In this case, combined heat and mechanical action on the rock is recommended. Indentation of a flat punch into a rock preheated by a flux is considered. Stresses in this case are determined as the sum of the stresses due to the heat alone and to the external load in the absence of heating. The paper presents the results of calculation of the pressure on the punch as a function of the heat flux for granite and teschenite. The products of thermomechanical destruction are particles with a size of the order of 0.1 cm. It is noted that there exists a definite relation between the thermal action,

1/2

APPROVED FOR RELEASE: 09/17/2001 CIA-RDP86-00513R002202410010-9"

"APPROVED FOR RELEASE: 09/17/2001 CIA-RDP86-00513R002202410010-9

USSR

BRICHKIN, A. V. et al., Nauch. tr. Kazakhsk. politekhn. in-t, Alma-Ata, 1971, pp 392-396

the mechanical load on the punch, and the size of the punch which give maximum productivity with minimum power expenditures. G. M. Lyakhov.

2/2

APPROVED FOR RELEASE: 09/17/2001 CIA-RDP86-00513R002202410010-9"

"APPROVED FOR RELEASE: 09/17/2001 CIA-RDP86-00513R002202410010-9

USSR

UDC: 532.516.2

MUKHITARYAN, A. M., MOVCHAN, V. T., PEREVERZEV, A. M.

"A Semibounded Turbulent Jet on a Thin Axisymmetric Body"

Sb. nauch. tr. Kiyev. in-t inzh. grazhd. aviatsii (Collected Scientific Works of the Kiev Institute of Civil Aviation Engineers), 1970, vyp. 6, pp 3-8 (from RZh-Mekhanika, No 7, Jul 71, Abstract No 7B704)

Translation: A method is outlined for calculating the velocity profiles in the main section of an axisymmetric semibounded jet. For this purpose, the authors use the Kolmogorov-Prandtl formula which establishes a relationship between turbulent tangential stress, the kinetic energy of turbulence, and the gradient of the averaged velocity. In calculating the velocities in the part of the jet near the wall, the distribution of turbulent energy is approximated by a first-degree polynomial, while the tangential stress is approximated by a third-degree polynomial of the transverse coordinate. In the external (jet) part, the turbulent energy is assumed to be independent of the transverse coordinate, and a third-degree polynomial is substituted for the tangential stress profile. The coefficients of the polynomials are determined from the boundary conditions on the wall, on the line of maximum velocities and on the outer boundary

1/2

APPROVED FOR RELEASE: 09/17/2001 CIA-RDP86-00513R002202410010-9"

"APPROVED FOR RELEASE: 09/17/2001 CIA-RDP86-00513R002202410010-9

MUKHITARYAN, A. M. et al., Sb. nauchn. tr. Kiyev. in-t inzh. grazhd. aviatsii, 1970, vyp. 6, pp 3-8

of the jet. For a special case (boundary layer on a flat plate with zero pressure gradients), the theoretical profile of the velocity defect is compared with the experimental data of Freeman, Kolebanov and Deal, Schultz-Grunov. Some considerations are given on the development of such jets along a body. A. V. Kolesnikov.

2/2

APPROVED FOR RELEASE: 09/17/2001 CIA-RDP86-00513R002202410010-9"

"APPROVED FOR RELEASE: 09/17/2001 CIA-RDP86-00513R002202410010-9

USSR

UDC: 533.697

PEREVERZEV, A. M.

"On the Problem of Investigations of Exit Cone Flows"

Sb. nauch. tr. Kiyev. in-t inzh. grazhd. aviatsii (Collected Scientific Works of the Kiev Institute of Civil Aviation Engineers), 1970, vyp. 6, pp 73-82 (from RZh-Mekhanika, No 7, Jul 71, Abstract No 7B378)

Translation: With the aim of investigating the possibilities of improving the characteristics of exit cones by blow-off of the boundary layer, and also for investigating the propagation of a semibounded turbulent jet in a two-dimensional turbulent flow, an experimental installation is designed and constructed which can be used for studying flat exit cones with variable aperture angle and blow-off of air along a tangent to the wall. The Reynolds number calculated from the parameters at the input is equal to $(0.5\text{-}1.4)\cdot 10^6$. Experimental relationships are found for the efficiency and coefficient of pressure recovery in an exit cone when the aperture angles vary from 6 to 42 degrees. A study is made of the distribution of static pressure along an exit cone in the mode of two-dimensional detachment, and an investigation is also made of the change in the coefficient

1/2

APPROVED FOR RELEASE: 09/17/2001 CIA-RDP86-00513R002202410010-9"

"APPROVED FOR RELEASE: 09/17/2001 CIA-RDP86-00513R002202410010-9

PEREVERZEV, A. M., Sb. nauch. tr. Kiyev. in-t inzh. grazhd. aviatsii, 1970, vyp. 6, pp 73-82

of pressure recovery in the exit cone and the velocity of one-dimensional flow lengthwise of the exit cone in the mode of two-dimensional flow detachment. Blow-off of the boundary layer improved exit cone characteristics, particularly at aperture angles of 22-40 degrees, and provided undetached flow at an aperture angle of 36 degrees. A. S. Malyutin.

2/2

APPROVED FOR RELEASE: 09/17/2001 CIA-RDP86-00513R002202410010-9"

"APPROVED FOR RELEASE: 09/17/2001 CIA-RDP86-00513R002202410010-9

Acc. Nr: AP0054027 Abstracting Service: CHEMICAL ABST. 5-70 Ref. Code: UR0065

102339w Deep removal of oil from paraffins using selective solvents. Pereverzev, A. N.; Roshchin, Yu. N. (USSR). *Khim. Tekhnol. Topl. Masel* 1970, 15(2), 25-8 (Russ). In order to limit oil and solvent content to 0.2-0.5 and 67-75%, resp., in paraffin deoiled at 0°, it was necessary to limit to 0.02-0.05% the oil content in the Me_2CO-C_6H_6 solvent mixt. used at 1:4 diln. for deoiling paraffin contg. 2.3% oil and at 1:4 and 1:5 diln. for 2-stage deoiling of crude paraffin contg. 16.4% oil when 100% solvent wash was used in each storage. Oil entrainment in the solvent was preventable when countercurrent application of solvent was used, and distn. of the more volatile oil components in the solvent evapn. section was avoidable when the initial b.p. was fixed at a suitable limit. Paraffin, m. 49.2, 55.4, and 60.0°, and contg. 0.2-0.5% oil was obtained in 62.0, 62.0, and 65.0% yield from crude Mangyshlak paraffin, b. 350-420, 400-50, and 420-90°, and contg. originally 13.4, 14.7, and 10.6% oil when 1030% of a 3:2 MeCOEt-C_6H_6 mixt. was used to deoil them in 3 stages at solvent ratios of 8.0:1, 9.8:1, and 47.0:1 for the first two paraffins and at solvent ratios of 7.7:1, 9.4:1, and 51.0:1 for the last. Narrowing of the paraffin fraction facilitated sepn. Recrystn. between stages further reduced oil content and made sepn. sharper. When 5% of a 500-30° fraction was added to a 420-90° fraction, solvent content in the cake was increased by 120-30% and the filtration rate was reduced by 34-45%.

Lucile S. Davison

REEL/FRAME
19831120

APPROVED FOR RELEASE: 09/17/2001 CIA-RDP86-00513R002202410010-9"

"APPROVED FOR RELEASE: 09/17/2001 CIA-RDP86-00513R002202410010-9

USSR

UDC 591.111.1.044.82

PEREVERZEV, A. YE., Institute of Cytology, Academy of Sciences USSR, Leningrad

"Effect of Salt Stress on Postradiation Recovery of Mouse Hematopoietic Cells in vivo"

Leningrad, Tsitologiya, No 10, 1971, pp 1308-1310

Abstract: Mice were x-irradiated 5 days after being kept on a diet consisting of a 5% sodium chloride solution and oats soaked with the same solution. The hematopoietic cells of the salt-stressed animals proved to be more sensitive to the x-rays than the control. Single and fractional irradiation had the same effect on the number of colonies in the spleen. However, if the animals were placed on a normal, salt-free diet during the first 3 days after exposure, fractionation had an effect, i.e., the number of colonies was larger than after a single equivalent dose of radiation and the blood cells became less sensitive. If restoration to a normal diet was delayed beyond 3 days, fractionation was ineffectual. These findings can be ascribed either to suppression of the repair of sublethally injured cells after the salt stress or to the assumption that sublethal injury does not occur at all under these conditions.

1/1

APPROVED FOR RELEASE: 09/17/2001 CIA-RDP86-00513R002202410010-9"

"APPROVED FOR RELEASE: 09/17/2001 CIA-RDP86-00513R002202410010-9

USSR

PEREVERZEV, A. YE.

UDC 576.3:612.017:615.5

"The Effect of Dibazole on the Nucleic Acid Content in Neurosecretory Cells of the Hypothalamus of Mice", pp 33-35, Sintez Belka i Rezistentnost' Kletook, (Protein Synthesis and Cell Resistance), Leningrad, "Nauka," 1971, 104 pp

Abstract: By means of a histochemical method of detecting mucleic acids (methyl green-thionine) it is shown that after an injection of a 10 mg/kg dose of dibazole, the content of RNA in the neurosecretory cells of mice increases.

1/1

APPROVED FOR RELEASE: 09/17/2001 CIA-RDP86-00513R002202410010-9"

"APPROVED FOR RELEASE: 09/17/2001 CIA-RDP86-00513R002202410010-9

USSR

UDC 681.178

PEREVERZEV, B. A., SHERSHAKOV, A. P., BROVKIN, V. A. and UVAROVA, N. G.

"A Device for Monitoring Breaks in a Sequence of Arriving Signals"

USSR Author's Certificate, Class H 04 1 13/12, No 339011, filed 24 July 70 published 8 June 72 (RZh-Avtomatika Telemechanika i Vychislitel'naya Tekhnika, No 3, Mar 73, Abstract No 3 A351P)

Translation: A device is proposed for monitoring breaks in a sequence of arriving signals. The device contains two polarized, dual-winding relays and an emergency relay. One of the outputs of the relay windings is connected to a buss of the power supply. The reliability of operation of the device is improved by the installation of a flip-flop, the counting input of which is connected to the other outputs of the windings of the polarized relays through divider diodes. The other output of the emergency relay winding is connected through the parallel connecting contacts of the polarized relays in series to the other buss of the power supply. One illustration,

1/1

APPROVED FOR RELEASE: 09/17/2001 CIA-RDP86-00513R002202410010-9"

"APPROVED FOR RELEASE: 09/17/2001 CIA-RDP86-00513R002202410010-9

Oscillators and Modulators

USSR

UDC 621.373.43

BROVKIN, V. A., PEREVERZEV, B. A., ANDREYEV, G. N.

"A Very Low Frequency Pulse Oscillator"

Moscow, Otkrytiya, izobreteniya, promyshlennyye obraztsy, tovarnyye znaki, No 24, Aug 71, Author's Certificate No 311381, Division H, filed 1 Oct 69, published 9 Aug 71, p 209

Translation: This Author's Certificate introduces a very low frequency pulse oscillator which contains two integrating RC circuits in which a resistor is shunted by a diode for discharge of a capacitance. The generator also contains comparators in which each of the inputs is connected to the output of one of the RC circuits. In addition, the device includes a relay and a two-thyristor flip-flop controlled by the comparators. As a distinguishing feature of the patent, the design of this pulse generator is simplified by connecting the relay winding in the anode circuit of one of the thyristors, electrically decoupling one of the supply circuits of each comparator from the supply circuit of the same polarity for the other comparator and connecting it to the input

1/2

APPROVED FOR RELEASE: 09/17/2001 CIA-RDP86-00513R002202410010-9"

"APPROVED FOR RELEASE: 09/17/2001 CIA-RDP86-00513R002202410010-9

USSR

BROVKIN, V. A., et al., Otkrytiya, izobreteniya, promyshlennyye obraztsy, tovarnyye znaki, No 24, Aug 71, Author's Certificate No 311381, Division H, filed 1 Oct 69, published 9 Aug 71, p 209

of the RC circuit which is connected to the input of this comparator, and connecting it at the same time to the moving contact of the corresponding contact group of the above-mentioned relay. The fixed contacts of these groups are connected to the oscillator supply circuits. When the input of one of the RC circuits is connected to one of the supply circuits, the input of the other RC circuit is connected to the second supply circuit.

2/2

APPROVED FOR RELEASE: 09/17/2001 CIA-RDP86-00513R002202410010-9"

"APPROVED FOR RELEASE: 09/17/2001 CIA-RDP86-00513R002202410010-9

USSR

UDC 621.165-57:536.21

PEREVERZEV, D. A.

"Transient Heat Exchange by Sudden Contact of the Working Fluid With a Flat Wall"

Energ. Mashinostroyeniye. Resp. Mezhved. Temat. Nauch.-Tekhn. Sb. /Power Machinebuilding. Republic Interdepartmental Thematic Scientific-Technical Collection/ 1972, Vol 14, pp 45-50 (from Referativnyy Zhurnal, No 9, Sep 72. 49. Turbostroyeniye. Single Issue. Abstract No 9.49.21)

Translation: Analyses are made of processes of transient heat exchange rising at initial moments from the contact of the working fluid with parts of power installations (at starts or abrupt change of their working conditions). It is demonstrated that under certain conditions (depending on thermophysical characteristics of contacting bodies and the rate and conditions of the flowing medium) the heat exchange process is going with a temperature jump on the surface of the parts. The hereby developing thermal stresses are recommended to be determined by means of solving the dynamic problem. One illustr., six biblio. refs.

1/1

APPROVED FOR RELEASE: 09/17/2001 CIA-RDP86-00513R002202410010-9"

"APPROVED FOR RELEASE: 09/17/2001 CIA-RDP86-00513R002202410010-9

USSR

UDC 621.165-57:536.21

PEREVERZEV, D. A.

"Transient Heat Exchange by Sudden Contact of the Working Fluid With a Flat Wall"

Energ. Mashinostroyeniye. Resp. Mezhved. Temat. Nauch.-Tekhn. Sb. /Power Machinebuilding. Republic Interdepartmental Thematic Scientific-Technical Collection/ 1972, Vol 14, pp 45-50 (from Referativnyy Zhurnal, No 9, Sep 72. 49. Turbostroyeniye. Single Issue. Abstract No 9.49.21)

Translation: Analyses are made of processes of transient heat exchange rising at initial moments from the contact of the working fluid with parts of power installations (at starts or abrupt change of their working conditions). It is demonstrated that under certain conditions (depending on thermophysical characteristics of contacting bodies and the rate and conditions of the flowing medium) the heat exchange process is going with a temperature jump on the surface of the parts. The hereby developing thermal stresses are recommended to be determined by means of solving the dynamic problem. One illustr., six biblio. refs.

1/1

APPROVED FOR RELEASE: 09/17/2001 CIA-RDP86-00513R002202410010-9"

"APPROVED FOR RELEASE: 09/17/2001 CIA-RDP86-00513R002202410010-9

USSR

UDC 533.951.8

PEREVERZEV, G. V.

"Cyclotron Instability of a Plasma in Adiabatic Magnetic Traps"

Leningrad, Zhurnal Tekhnicheskoy Fiziki, Vol 40, No 7, 1970, pp 1337-1345

Abstract: The theory of plasma cyclotron instability is generalized to cover the case of traps in which there is a beam of particles along the magnetic field. Such a distribution occurs in a trap with an acute particle injection angle. Asymptotic formulas are obtained which describe the instability region limits, and increments of the instability are found. The way in which the instability regions vary with measurements of the plasma parameters is determined. Results of the numerical computation with which the instability regions were constructed were compared with the results of experiments in which the threshold plasma density required to stimulate the instabilities was measured. A good agreement between the two was found. Analysis of the instability regions indicates that the threshold cyclotron oscillations are due to the ion anisotropic temperature

1/2

APPROVED FOR RELEASE: 09/17/2001 CIA-RDP86-00513R002202410010-9"

"APPROVED FOR RELEASE: 09/17/2001 CIA-RDP86-00513R002202410010-9

USSR

PEREVERZEV, G. V., Zhurnal Tekhnicheskoy Fiziki, Vol 40, No 7, 1970, pp 1337-1345

and depend only slightly on the specific form of ion velocity distribution. The author expresses his gratitude to Yu. N. Dnestrovskiy for his guidance and suggestions.

2/2

APPROVED FOR RELEASE: 09/17/2001 CIA-RDP86-00513R002202410010-9"

"APPROVED FOR RELEASE: 09/17/2001 CIA-RDP86-00513R002202410010-9

USSR UDC: 621.317.326

PEREVERZEV, L. A.

"Measuring the Spectral Density of Pulses"

Dokl. Nauchno-tekhn. seminara "Metrol. v radioelektron." Tezisy, Ch. 1 (Reports of the Scientific and Technical Seminar on Metrology in Radio Electronics. Summaries, Part 1), Moscow, 1970, pp 29-32 (from RZh-Radiotekhnika, No 7, Jul 70, Abstract No 7A182)

Translation: Two groups of methods for measuring spectral density are indicated: 1) determination of spectral density from pulse parameters (from the magnitude of a short pulse, the amplitude of a pulse with a steep front); 2) measurement of spectral density by using a selective device (from response parameters at low prf, from the harmonics at high prf). Brief information is given on these groups. E. L.

1/1

APPROVED FOR RELEASE: 09/17/2001 CIA-RDP86-00513R002202410010-9"

"APPROVED FOR RELEASE: 09/17/2001 CIA-RDP86-00513R002202410010-9

USSR

UDC: 519.2

PEREVERZEV, Ye. S.

"Concerning an Algorithm for Approximate Calculation of Multidimensional Normal Distribution"

Gidroaeromekh. i teoriya uprugosti. Mezhvuz. nauch. sb. (Hydroaeromechanics and Elasticity Theory. Intercollegiate Scientific Collection), 1972, vyp. 14, pp 188-191 (from RZh-Kibernetika, No 10, Oct 72, abstract No 10V17 from the author's résumé)

Translation: An algorithm is proposed for approximate calculation of multidimensional normal distribution. This algorithm can be used in solving engineering reliability problems.

1/1

APPROVED FOR RELEASE: 09/17/2001 CIA-RDP86-00513R002202410010-9"

"APPROVED FOR RELEASE: 09/17/2001 CIA-RDP86-00513R002202410010-9

USSR

SHISHKIN, L. A., PEREVERZEV, Yu. V., Physicotechnical Institute of Low Temperatures, Academy of Sciences, Ukrainian SSR; Kharkov State University imeni A. M. Gor'kiy

"The Effect of a Magnetic Field on the Thermal Conductivity of Ferromagnetic Dielectrics"

Leningrad, Fizika Tverdogo Tela, No 9, September 1970, pp 2762-2764

Abstract: It has been shown that spinwaves substantially affect the thermal conductivity of ferromagnetic and antiferromagnetic dielectrics; up to now, however, account has not been taken of a magnetic field. Since the spectrum of spin waves generally depends upon the magnetic field, a relationship should be expected between the magnetic field and thermal conductivity. In the present article, this relationship is found for the thermal conductivity coefficient of a uniaxial ferroelectric of the "light axis" type. It is found that changing the intensity of the magnetic field H brings about a change in the nature of the ratio of the coefficient of thermal conductivity to H. 7 bibliographic entries

1/1

APPROVED FOR RELEASE: 09/17/2001 CIA-RDP86-00513R002202410010-9"

"APPROVED FOR RELEASE: 09/17/2001 CIA-RDP86-00513R002202410010-9

1/2 014 UNCLASSIFIED PROCESSING DATE--11SEP70

TITLE--ROTARY RING FURNACE PREPARATION OF LUMP SMOKELESS HOUSEHOLD FUEL FROM CENTRAL ASIAN COALS -U-

AUTHOR--GRACHEV, G.I., ZAGORETS, A.M., MAKAROV, G.N., PEREVEZENTSEV, A.V., SYSKOV, K.I.

COUNTRY OF INFO--USSR

SOURCE--KHIM. TVERD. TOPL. 1970, (1), 78-85

DATE PUBLISHED--------70

SUBJECT AREAS--PROPULSION AND FUELS

TOPIC TAGS--COAL, PYROLYSIS, SOLID FUEL

CONTROL MARKING--NO RESTRICTIONS

DOCUMENT CLASS--UNCLASSIFIED

PROXY REEL/FRAME--1990/2033 STEP NO--UR/0467/70/000/001/0078/0085

CIRC ACCESSION NO--AP0109965

UNCLASSIFIED

APPROVED FOR RELEASE: 09/17/2001 CIA-RDP86-00513R002202410010-9"

"APPROVED FOR RELEASE: 09/17/2001 CIA-RDP86-00513R002202410010-9

2/2 014 UNCLASSIFIED PROCESSING DATE--11SEP70

CIRC ACCESSION NO--AP0109965

ABSTRACT/EXTRACT--(U) GP-0- ABSTRACT. THE TITLE FUEL WAS PREPD. BY GRANULATION AND THERMAL TREATMENT OF MIXTS. OF 55-65 PARTS OF CENTRAL ASIAN NON CAKING COALS WITH 25-35PARTS OF SIFTINGS OF KARAGANDA COALS. THE MIXTS. ARE INTRODUCED INTO A ROTARY RING FURNACE AT 750DEGREES AND SLOWLY HEATED TO 1050DEGREES WHILE THE HEARTH REMAINED AT 540DEGREES. WITH THE TITLE FUEL THE EFFICIENCY OF HOUSEHOLD OVENS REACHED 80PERCENT WHILE WITH SIMILAR BRIQUETS NOT THERMALLY TREATED THE COEFF. WAS SMALLER THAN 65PERCENT.

UNCLASSIFIED

APPROVED FOR RELEASE: 09/17/2001 CIA-RDP86-00513R002202410010-9"

"APPROVED FOR RELEASE: 09/17/2001 CIA-RDP86-00513R002202410010-9

2 014 UNCLASSIFIED PROCESSING DATE--11SEP70

TITLE--ROTARY RING FURNACE PREPARATION OF LUMP SMOKELESS HOUSEHOLD FUEL FROM CENTRAL ASIAN COALS -U-

2

AUTHOR--GRACHEV, G.I., ZAGORETS, A.M., MAKAROV, G.N., PEREVEZENTSEV, A.V., SYSKOV, K.I.

COUNTRY OF INFO--USSR

SOURCE--KHIM. TVERD. TOPL. 1970, (1), 78-85

DATE PUBLISHED--------70

SUBJECT AREAS--PROPULSION AND FUELS

TOPIC TAGS--COAL, PYROLYSIS, SOLID FUEL

CONTROL MARKING--NO RESTRICTIONS

DOCUMENT CLASS--UNCLASSIFIED

PROXY REEL/FRAME--1990/2033 STEP NO--UR/0467/70/000/001/0078/0085

CIRC ACCESSION NO--AP0109965

ZZZZZZZZZZZZ UNCLASSIFIED

APPROVED FOR RELEASE: 09/17/2001 CIA-RDP86-00513R002202410010-9"

"APPROVED FOR RELEASE: 09/17/2001 CIA-RDP86-00513R002202410010-9

2/2 014 UNCLASSIFIED

CIRC ACCESSION NO--AP0109965 PROCESSING DATE--11SEP70

ABSTRACT/EXTRACT--(U) GP-0- ABSTRACT. THE TITLE FUEL WAS PREPD. BY GRANULATION AND THERMAL TREATMENT OF MIXTS. OF 55-65 PARTS OF CENTRAL ASIAN NON CAKING COALS WITH 25-35PARTS OF SIFTINGS OF KARAGANDA COALS. THE MIXTS. ARE INTRODUCED INTO A ROTARY RING FURNACE AT 750DEGREES AND SLOWLY HEATED TO 1050DEGREES WHILE THE HEARTH REMAINED AT 540DEGREES. WITH THE TITLE FUEL THE EFFICIENCY OF HOUSEHOLD OVENS REACHED 80PERCENT WHILE WITH SIMILAR BRIQUETS NOT THERMALLY TREATED THE COEFF. WAS SMALLER THAN 65PERCENT.

ZZZZZZZZZZZZ UNCLASSIFIED

APPROVED FOR RELEASE: 09/17/2001 CIA-RDP86-00513R002202410010-9"

"APPROVED FOR RELEASE: 09/17/2001 CIA-RDP86-00513R002202410010-9

USSR

UDC 621.396.963.3

ISAYEV, L. P., PEREVEZENTSEV, L. T., PILIPCHIK, V. G.

"Methods of Obtaining a Discrete Color Television Image By the Output Signals of a Controlling Electronic Digital Computer"

Sb. nauch. tr., Kiyev. in-t inzh. grazhd. aviatsii (Collection of Scientific Works, Kiev Institute of Civil Aviation Engineers), 1970, Issue 5, pp 62-64 (from RZh--Radiotekhnika, No 9, Sep 1971, Abstract No 9G41)

Translation: Possible methods are analyzed for obtaining a color television image in the form of a combination of different markers using the output signals of a digital computer in aviation simulators of visual situations. A color mask kinescope is employed having three luminophors, each excited by a separate beam, and a digital computer (grafekop) is sued as the output device. A number of recommendations are presented on the choice of a method of conversion of the digital computer signals into television signals. 2 ill. N. S.

1/1

APPROVED FOR RELEASE: 09/17/2001 CIA-RDP86-00513R002202410010-9"

"APPROVED FOR RELEASE: 09/17/2001 CIA-RDP86-00513R002202410010-9

USSR

UDC 621.396.963:621.397

PILIPCHIK, PERSVERENTSEV, L.T., ISAYEV, L.P.

"Transmission Of Supplementary Information During Conversion Of Radar Signals Into Television"

Sb. nauch. tr. Kiyev. in-t inzh. grazhd. aviatsii (Collection Of Scientific Works, Kiev Institute Of Civil Aviation Engineers), 1970, Issue 5, pp 55-61 (from RZh--Radiotekhnika, No 9, Sept 1971, Abstract No 9G46)

Translation: Possible methods are considered for simultaneous conversion of the three radar signals which characteristize the three parameters of the target (coordinates and supplementary criterion) into television signals for representation of the aerial situation in dispatcher systems. Of the four systems analyzed--amplitude, code, frequency, and pulse duration modulation -- the code method has the greatest advantages, making it possible to increase the volume of supplementary information being represented without significantly decreasing the resolving power of the system as a whole. The precision of transmission of the supplementary information by the code method does not depend on nonlinearity of the scanning. In addition the conversion apparatus is simplified. 6 ill. N.S.

1/1

APPROVED FOR RELEASE: 09/17/2001 CIA-RDP86-00513R002202410010-9"

"APPROVED FOR RELEASE: 09/17/2001 CIA-RDP86-00513R002202410010-9

USSR

UDC 621.396.963.3

PEREVEZENTSEV, L.T., ISAYEV, L.P.

"Color Indication Of Radar Signals"

Sb. nauch. tr. Kiyev. in-t inzh.grazhd. aviatsii (Collection Of Scientific Works. Kiev Institute Of Civil Aviation Engineers), 1970, Issue 5, pp 3-10 (from RZh--Radiotekhnika, No 9, Sept 1971, Abstract No 9G39)

Translation: The possibility is evaluated of using color indicators in radar systems for control of air traffic in the case of civil aviation. The materials are presented of experiments on recognition of various gradations of light as applied to the working conditions of dispatchers. The possibility is considered of presenting additional information on screens of light indicators of the television type. Requirements are formulated on color indication which, however, bear a provisional nature because it is impossible to consider the data provided as sufficient. 2 ill. 15 ref. N.S.

1/1

APPROVED FOR RELEASE: 09/17/2001 CIA-RDP86-00513R002202410010-9"

"APPROVED FOR RELEASE: 09/17/2001 CIA-RDP86-00513R002202410010-9

USSR

UDC 539.67

PRAVDYUK, N. F., PEREVEZENTSEV, V. N., and VIKHOROV, V. I.

"Study of Thermal Annealing of Radiation Damage in Metals by the Internal Friction Method"

Sb. "Vnutrenneye treniye v metallicheskikh materialakh" (Internal Friction in Metallic Materials), Moscow, Izd-vo "Nauka," 1970, pp 101-104

Abstract: The effect of neutron irradiation and subsequent isochronous annealing on internal friction and critical stress of copper and molybdenum was studied.

As a result of irradiation the amplitude independent internal friction of copper decreases, while that of molybdenum increases; the critical stress for both metals increases several times.

The variation of copper Q^{-1} is explained on the basis of the Granato-Lucke dislocation model, and that of molybdenum by the presence of "free" (not related to dislocations) point defects. The rise of copper and molybdenum critical stress is governed by the effect of radiation strengthening. 4 figures, 4 references.

1/1

APPROVED FOR RELEASE: 09/17/2001 CIA-RDP86-00513R002202410010-9"

"APPROVED FOR RELEASE: 09/17/2001 CIA-RDP86-00513R002202410010-9

USSR

UDC 621.3.035.2

PEREVEZENTSEV, V. P., ZHUNDA, A. N., ZEBERIN', A. G., and SINEL'NIKOVA, L. V.

"On the Utilization of Graphites as Materials for Aluminum Evaporators"

Moscow, Tsvetnyye Metally, No 7, Jul 71, pp 40-43

Abstract: Graphites possess the most satisfactory combination of properties for use as materials for aluminum evaporators. The usefulness of three brands of graphite with different porosities, GMZ, MPG6, and V-2(2), the two first produced by electrode technology, the last by thermomechanical processing of the charge, was experimentally investigated. It was found that small boats of graphites with porosities $< 1\%$, like graphites of the type V-2(2), are close to industrial small boats of titanium diboride in their performances, but they possess a higher utilization factor. The use of graphites of the type V-2(2) without coating is recommended for parts working in the atmosphere of Al vapors but not having a direct contact with Al, e.g., for heaters. For evaporative parts, graphites of the type V-2(2) with carbide coatings are recommended. Four illustrations, three tables, fourteen bibliographic references.

1/1

APPROVED FOR RELEASE: 09/17/2001 CIA-RDP86-00513R002202410010-9"

"APPROVED FOR RELEASE: 09/17/2001 CIA-RDP86-00513R002202410010-9

USSR

UDC 621.3.035.2

PEREVEZENTSEV, V. P., ZOLKIN, P. I., PISKUNOV, V. A., and BEREZIN, I. A.

"Construction Graphites With a Metallic Bond"

Moscow, Tsvetnyye Metally, No 10, Oct 70, pp 45-46

Abstract: Three new experimental construction graphites, V-2S, V-2, and LG-1, were produced recently by thermomechanical processing of a mixture consisting of coke and additions of carbide forming metals such as silicon and zirconium. The metallic additions, which serve as a bond, at the same time substantially affect the quality (heat and electric conductivity, strength) of the graphite obtained. The process is accomplished in a single 3-hour operation. The size of the billets depends on the electric and mechanical power of the press and also on the mold strength. The basic physico-mechanical properties of the graphites are presented in a table.

1/1

APPROVED FOR RELEASE: 09/17/2001 CIA-RDP86-00513R002202410010-9"

"APPROVED FOR RELEASE: 09/17/2001 CIA-RDP86-00513R002202410010-9

Electromagnetic Wave Propagation

USSR

UDC 621.372.8.09

PEREVERZEV, S. I.

"Complex Waves in Gubo's Line"

Gor'kiy, Izvestiya vysshikh uchebnykh zavedeniy, Radiofizika, Vol XIV, No 12, 1971, pp 1864-1868

Abstract: A study was made of the symmetric E and H-complex waves in Gubo's line and a dielectric cylinder. On the basis of analyzing the behavior of the roots of the dispersion equation in the complex plane of their values, the spectrum of the symmetric waves (surface and complex, in particular, exit) of a wave guide formed by an ideally conducting cylinder with a dielectric layer is investigated. Waves in a dielectric cylinder were considered as a special case, and the case of a dielectric with losses is investigated. The exit wave is a forerunner of the corresponding surface wave and turns into the latter on transition of the frequency through the critical frequency. The "basic" surface wave (having critical frequency of zero) does not have this forerunner. An analogous result for the "basic" wave of a flat dielectric wave guide was also obtained from other expressions [V. P. Mal'tsev, et al., Izv. vyssh. uch. zav., Radiofizika, Vol XII, No 12, 1855, 1969.

1/1

APPROVED FOR RELEASE: 09/17/2001 CIA-RDP86-00513R002202410010-9"

"APPROVED FOR RELEASE: 09/17/2001 CIA-RDP86-00513R002202410010-9

USSR

UDC 62-52:003.13

KUZNETSOV, G. G., PEREVERZEV, YU. V., KONSTANTINOVSKIY, L. B., and VAYNBLAT, B. I., Engineers

"Calculation of Efficiency of Using Automatic Data Transmission Networks"

Moscow, Mekhanizatsiya i Avtomatizatsiya Proizvodstva, No 9, 1971, pp 36-37

Abstract: The article considers the efficiency of replacing ordinary data transmission methods (for example, by telephone) with automatic transmission in fixed- and variable-routing networks. The savings achieved by automatic data transmission are calculated as a function of the cost of transmitting the equivalent amount of information by telephone between the same subscribers.

1/1

APPROVED FOR RELEASE: 09/17/2001 CIA-RDP86-00513R002202410010-9"

"APPROVED FOR RELEASE: 09/17/2001 CIA-RDP86-00513R002202410010-9

USSR

UDC 621.396.963.3

DYUBURG, O. I., PEREVEZENTSEV, L. G.

"Perception of Color Marks of Radar Signals with Television Type Displays"

Sb. nauch. tr. Kiev. in-t inzh. grazhd. aviatsii (Collection of Scientific Works of the Kiev Institute of Civil Aviation Engineering), 1971, vyp. 6, pp 56-60 (from RZh-Radiotekhnika, No 6, Jun 72, Abstract No 6G70)

Translation: A study was made of the basic laws of color perception for the fine details of an image when the dispatcher is observing radar images on TV-type color display screens. The experiments were performed using a color video control device based on a masked kinescope. The effect of the additional information in the form of color variation of the target marks on the resolution of the display is established. There are 5 tables.

1/1

APPROVED FOR RELEASE: 09/17/2001 CIA-RDP86-00513R002202410010-9"

"APPROVED FOR RELEASE: 09/17/2001 CIA-RDP86-00513R002202410010-9

USSR

UDC 621.385.032.269

PEREVODCHIKOV, V.I.*, FEDOROV, O.L., YUMATOV, K.O. [*Transliterated from Ukrainian]

"Pulsed Electron Gun With Current Up To 1 ka"

Ukr.fiz.zh. (Ukrainian Journal Of Physics), 1971, 16, No 6, pp 971-976 (from RZh--Elektronika i yeye primeneniye, No 11, Nov 1971, Abstract No 11A24)

Translation: A pulsed electron gun (EG) is considered, with a cathode of lanthanum boride, which assures a choice of electron current densities up to 300 a/cm^2. The construction is described of an EG for current up to 1 ka, and a number of advantages are shown of EG with thermocathodes as compared with EG with cathodes operating in prebreakdown regimes. The requirements are determined for the high-voltage power supply of a pulsed EG. 4 ref. Summary.

1/1

APPROVED FOR RELEASE: 09/17/2001 CIA-RDP86-00513R002202410010-9"

"APPROVED FOR RELEASE: 09/17/2001 CIA-RDP86-00513R002202410010-9

USSR

UDC 621.32.032.75

RODICHEV, Yu. M., CHEMERIS, A. N., PEREVORUKHOV, G. I., AMEL'YANOVICH, K. K., PODGORNYY, L. N., KRAYNOVA, E. A., (Kiev)

"Supporting Power of Spherical Ceramic Shells Under External Pressure"

Kiev, Problemy Prochnosti, No 8, 1972, pp 26-29.

Abstract: Results are presented from tests of spheres of an aluminum ceramic under external pressure conditions. It is established that the initial geometric imperfections of the shells, characteristic for ceramic technology, have just as great an influence on the stability of ceramic spheres as on metallic spheres. The high strength of the aluminum ceramic in the shells, evidenced both with single-cycle and repeated-cycle applications of external pressure, is noted. It is remarked that an earlier work [Stachiw, I. D., "Design Parameters for Glass and Ceramic Underwater Structures," Ceramic Age., Vol 81, No 6, 1965] recommends that k be taken as 0.7 in the Zolli formula for critical pressure. The results of this study show that the value of k for spheres with deviations typical for ceramic technology may be lower. The following formula is recommended for aluminum ceramic spheres with R/h ratios of 40:

$$P_{cr} = \frac{0.35-0.40}{\sqrt{1-\mu^2}} E (h/R)^2. \quad (6)$$

1/2

APPROVED FOR RELEASE: 09/17/2001 CIA-RDP86-00513R002202410010-9"