"APPROVED FOR RELEASE: 09/17/2001 CIA-RDP86-00513R002202430005-3

USSR

VOROB'YEV, Ye. I. and POBEDINSKIY, M. N., Meditsina, 1973, 228 pp.

Reaction of the Skin to Radiation 93
Radiation Injuries to Bone Tissue 97
Radiation Damage to Sex Organs and the Effect of Exposure on Offspring 99
Radiosensitivity and Quantitative Rules 103
Toxicology, Immunity, and Remote Consequences 106
Prophylaxis and Therapy of Radiation Sickness 107
The Use of Radioactive Isotopes 111
Chapter 2. Successes of Radiation Therapy 115
Technical Equipment 120
Radioactive Isotopes and Their Use in Medicine 122
Radioisotope Diagnosis 136
The Use of Radioactive Isotopes in Biological Research 141
Chapter 3. Radon Therapy in the USSR 144
The Mechanism of Action of Radon Waters 147
Development of the Method of Using Radon Waters 151
Chapter 4. Radiation Hygiene, Protection Against Exposure, and Safety Technique in Working With Radioactive Substances 153

3/5

APPROVED FOR RELEASE: 09/17/2001 CIA-RDP86-00513R002202430005-3"

"APPROVED FOR RELEASE: 09/17/2001 CIA-RDP86-00513R002202430005-3

USSR

VOROB'YEV, Ye. I and POREDINSKIY, M. N., Meditsina, 1972, 228 pp

Chapter 5. Scientific Research Institutions Which Are Developing the Problems of Radiation Medicine 163
The Central Scientific Research Roentgenoradiological Institute, Ministry of Health USSR 163
The Moscow Scientific Research Roentgenoradiological Institute, Ministry of Health RSFSR 173
The Institute of Medical Radiology, Academy of Medical Sciences USSR 181
The Khar'kov Scientific Research Institute of Medical Radiology, Ministry of Health Ukrainian SSR 182
The Kiev Scientific Research Roentgenoradiological and Oncological Institute, Ministry of Health Ukrainian SSR 186
The Scientific Research Institute of Roentgenology, Radiology, and Oncology, Ministry of Health Azerbaydzhan SSR 183
The Scientific Research Institute of Roentgenology and Oncology, Ministry of Health Armenian SSR 190
The Scientific Research Institute of Roentgenology and Medical Radiology, Ministry of Health Georgian SSR 190
The Kirgiz Scientific Research Institute of Oncology and Radiology 192

4/5

APPROVED FOR RELEASE: 09/17/2001 CIA-RDP86-00513R002202430005-3"

"APPROVED FOR RELEASE: 09/17/2001 CIA-RDP86-00513R002202430005-3

USSR

VOROB'YEV, Ye. I. and POBEDINSKIY, M. N., Meditsina, 1972, 228 pp.

The Uzbek Scientific Research Institute of Oncology and Radiology 192
The Kazakh Scientific Research Institute of Oncology and Radiology 195
The Scientific Research Institute of Oncology and Medical Radiology, Ministry of Health Belorussian SSR 196
The Scientific Research Institute of Oncology imeni Professor N. N. Petrov, Ministry of Health USSR 196
The Moscow Scientific Research Oncological Institute Imeni P. A. Gertsen 198
Chapter 6. Training of Cadres in Radiation Medicine 199
Chapter 7. The Organization of Roentgen-Radiological Care in the USSR 205
Conclusion 214
Bibliography 217

5/5

APPROVED FOR RELEASE: 09/17/2001 CIA-RDP86-00513R002202430005-3"

"APPROVED FOR RELEASE: 09/17/2001 CIA-RDP86-00513R002202430005-3

USSR UDC 621.[illegible].01

ARISTARKHOVA, O.N., BOROLENKO, V.G., MAL'KOVA, N.YA., PINCHUR, L.A., POBEDONOSTSEV, A.S.

"Optimization On Digital Computer Of Efficiency Of Multisection TWT"

Elektron.tekhnika. Nauch.-tekhn.sb.Elektron. SVCh (Electronics Technology. Scientific-Technical Collection. Microwave Electronics), 1971, Issue 7, pp 111-114 (from RZh--Elektronika i vaya primeneniye, No 11, Nov 1971, Abstract No 11A181)

Translation: The results are presented of an automatic optimization on a digital computer of the efficiency of a traveling-wave tube with a gap [illegible], three-phase discontinuities, and a phase discontinuity of the wave velocity. With values of the amplification parameter C = 0.1, microperveance [illegible] = 0.0, and loss parameter d = 0.01, the electron efficiency of the optimum version of the TWT which is found amounts to 65 percent. With respect to the characteristics of the interaction mechanism, the version of the TWT considered is close to hybrid devices. Summary.

1/1

APPROVED FOR RELEASE: 09/17/2001 CIA-RDP86-00513R002202430005-3"

"APPROVED FOR RELEASE: 09/17/2001 CIA-RDP86-00513R002202430005-3

Vacuum Tubes

USSR UDC 621.385.624

BORODENKO, V. G., ZAKURDAYEV, A. D., MAL'KOVA, N. Ya., POMEDNOSTSEV, A. S.

"Designing Centimeter Band Amplifying Klystron With the Aid of an Electronic Computer"

Elektron. tekhnika. Nauch.-tekhn. sb. Elektron. SVCh (Electronics Technology. Scientific-Technical Collection. Microwave Electronics), 1971, Issue 8, pp 18-20 (from RZh--Elektronika i yeye primeneniye, No 12, Dec 1971, Abstract No 12A261)

Translation: The output characteristics are presented of a 5-cavity amplifying klystron, the spatial interaction of which was otimized on a computer. The efficiency of the experimental models is 10-12 percent higher than with known advertised types of a given class. 4 ref. Summary

1/1

APPROVED FOR RELEASE: 09/17/2001 CIA-RDP86-00513R002202430005-3"

"APPROVED FOR RELEASE: 09/17/2001 CIA-RDP86-00513R002202430005-3

USSR

UDC 621.385.632

POBEDONOSTSEV, A. S., ROVENSKIY, G. V., and MAL'KOVA, N. Ya.

"Theoretical Analysis of a TWT With Increased Phase Velocity of a Wave in the Output Section of the Delay System"

Elektron. tekhnika. Nauch.-tekhn. sb. Elektron. SVCh (Electronics Technology) Scientific-Technical Collection. Microwave Electronics), 1971, Issue 4, pp 148-150 (from RZh-Elektronika i yeye primeneniye, No 8, August 1971, Abstract No 8A184)

Translation: A theoretical study is made of a traveling-wave tube with an increased phase velocity of a wave in the output section under the condition of continuity of the power flux among the latter sections. It is shown that with operation according to such a scheme and with increased parameters, nonsynchronisms of the input section for electrons and the total efficiency are increased. Summary.

1/1

APPROVED FOR RELEASE: 09/17/2001 CIA-RDP86-00513R002202430005-3"

"APPROVED FOR RELEASE: 09/17/2001 CIA-RDP86-00513R002202430005-3

USSR

UDC 621.385.632

POBEDONOSTSEV, A.S., MAL'KOVA, N.YA., BORODENKO, V.G.

"To A Nonlinear Theory Of A Resonant TWT Oscillator"

Elektron. tekhnika. Nauchno-tekhn. sb. Elektron. SVCh (Electronic Technology. Scientific-Technical Collection. Microwave Electronics), 1970, No 8, pp 3-10 (from RZh--Elektronika i yeye primeneniye, No 12, December 1970, Abstract No 12A178)

Translation: The peculiarities of the mechanism of interaction and the energy characteristics of traveling-wave tube oscillator are considered in the approximations of nonlinear one-dimensional theory. It is shown that with respect to efficiency this device considerably surpasses conventional and resonant backwave-wave tubes, and is not inferior to the latter in other output parameters. 8 ref. Summary.

1/1

APPROVED FOR RELEASE: 09/17/2001 CIA-RDP86-00513R002202430005-3"

"APPROVED FOR RELEASE: 09/17/2001 CIA-RDP86-00513R002202430005-3

USSR

UDC 621.385.6:681.3

BLEYVAS, I. M., LUKOSHOV, V. S., MIKHAYLUS, F. F., POBEDONOSTSEV, A. S., SAZONOV, V. P., SILIN, R. A.

"Machine Methods of Planning Microwave Electrovacuum Devices -- Means of Increasing the Efficiency of Development"

Elektron. tekhnika. Nauchno-tekhn. sb. Elektron. SVCh (Electronic Technology. Scientific-Technical Collection. Microwave Electronics), 1970, No 4, pp 74-97 (from RZh--Elektronika i yeye primeneniye, No 7, July 1970, Abstract No 7A118)

Translation: The basic problems of machine planning of microwave electrovacuum devices are formulated, and some concrete examples of machine planning in the area of electronics, electrodynamics, and electron optics are considered. Problems are discussed of the creation of a system of procedure in machine planning and problems in the area of machine planning of microwave electrovacuum devices. 55 ref. Summary.

1/1

APPROVED FOR RELEASE: 09/17/2001 CIA-RDP86-00513R002202430005-3"

"APPROVED FOR RELEASE: 09/17/2001 CIA-RDP86-00513R002202430005-3

USSR

P

UDC 539.23

POBEDONOSTSEV, L. A., SELITSKIY, Yu. A.

"Manufacture of Thin Nickel Foil"

Moscow, Pribory i Tekhnika Eksperimenta, p 263

Abstract: A simple method is described for producing thin nickel foil, which can be used as substrate for targets and radioactive sources. The foil is produced by applying a thin layer of NaCl (10-60 mg/cm^2) to a glass surface by evaporation by heat in a vacuum. Then this substrate is transferred to a heated plate, an Al foil mask is placed on it and they are heated together to 200°C. After evacuation of the installation to $(2-3)\cdot10^{-2}$ torr, vapors of $Ni(CO)_4$ are admitted through a filter. A needle valve is used to establish the pressure at $(1-2)\cdot10^{-1}$ torr. After the required film thickness is built up, the glass is removed, cooled, then placed in water at room temperature. The Ni film will float to the surface of the water, from which it is lifted by a frame.

1/1

APPROVED FOR RELEASE: 09/17/2001 CIA-RDP86-00513R002202430005-3"

"APPROVED FOR RELEASE: 09/17/2001 CIA-RDP86-00513R002202430005-3

1/2 012 UNCLASSIFIED PROCESSING DATE--23OCT70

TITLE--SOLUTION TO CONTACT TYPE PROBLEMS IN LINEAR VISCOELASTICITY THEORY -U-

AUTHOR--POBEDRIA, B.E.

COUNTRY OF INFO--USSR

SOURCE--AKADEMIIA NAUK SSSR, DOKLADY, VOL. 190, JAN. 11, 1970, P. 297-300

DATE PUBLISHED--11JAN70

SUBJECT AREAS--PHYSICS

TOPIC TAGS--VISCOELASTICITY, LINEAR SYSTEM, ISOTROPIC PROPERTY, BOUNDARY VALUE PROBLEM

CONTROL MARKING--NO RESTRICTIONS

DOCUMENT CLASS--UNCLASSIFIED

PROXY REEL/FRAME--1980/0524 STEP NO--UR/0020/70/190/000/0297/0300

CIRC ACCESSION NO--AT0048765

UNCLASSIFIED

APPROVED FOR RELEASE: 09/17/2001 CIA-RDP86-00513R002202430005-3"

"APPROVED FOR RELEASE: 09/17/2001 CIA-RDP86-00513R002202430005-3

2/2 012 UNCLASSIFIED PROCESSING DATE--23OCT70

CIRC ACCESSION NO--AT0048765

ABSTRACT/EXTRACT--(U) GP-0- ABSTRACT. CONSIDERATION OF THE PROBLEM OF A BODY IN AN ISOTROPIC LINEAR VISCOELASTIC MEDIUM WITH CONTACT TYPE BOUNDARY CONDITIONS GIVEN ON EACH PART OF THE BOUNDARY OF THE BODY. THE PROBLEM CONSISTS IN INTEGRATING THE EQUILIBRIUM EQUATIONS OF THE MOST STATIC PROBLEM OF VISCOELASTICITY WHILE SATISFYING THE BOUNDARY CONDITIONS. IT IS SHOWN THAT A SOLUTION TO THE PROBLEM OF LINEAR VISCOELASTICITY EXISTS AND IS UNIQUE. MOREOVER, IF AN ELASTIC SOLUTION TO A CERTAIN PROBLEM IS KNOWN, THEN THE CORRESPONDING VISCOELASTIC SOLUTION CAN BE FOUND EXACTLY.

UNCLASSIFIED

APPROVED FOR RELEASE: 09/17/2001 CIA-RDP86-00513R002202430005-3"

"APPROVED FOR RELEASE: 09/17/2001 CIA-RDP86-00513R002202430005-3

USSR UDC: 539.376+532.135

POBEDRYA, B. Ye.

"On Solving Problems of Thermoviscoelasticity With a Nonhomogeneous Temperature Field"

V sb. Uprugost' i neuprugost'. Vyp. 1 (Elasticity and Inelasticity--collection of works, No 1), Moscow, Moscow University, 1971, pp 172-201 (from RZh-Mekhanika, No 5, May 72, Abstract No 5V455)

Translation: The author proposes a method of solving nonisothermal problems of linear viscoelasticity if the nonuniform temperature field $T(x_k,t)$ is preassigned. The method is based on using a modified principle of temperature--time analogy and reduces to the method of the small parameter: from the known temperature field, the temperature displacement function $f(x_k,t) = 1/a_T(x_k,t)$ is found and written in the form

$$f(x_k,t) \approx f_0(t)\left\{1+\lambda\frac{f(x_k,t)-f_0(t)}{f_0(t)}\right\}$$

where $f_0(t) \equiv \langle f(x_k,t)\rangle$. Here averaging may be done, for instance with respect to volume occupied by the body. In this case the expression for the

1/2

APPROVED FOR RELEASE: 09/17/2001 CIA-RDP86-00513R002202430005-3"

"APPROVED FOR RELEASE: 09/17/2001 CIA-RDP86-00513R002202430005-3

USSR

POBEDRYA, B. Ye., Uprugost' i neuprugost'. Vyp. 1, Moscow, Moscow University, 1971, pp 172-201

reduced time assumes the form

$$t' = \int_0^t \frac{d\xi}{a_T(\xi)} = \int_0^t f_0(t)\,dt + \lambda \int_0^t [f(x_k, t) - f_0(t)]\,dt$$

Considering the numerical parameter λ as a small parameter, the relaxation kernel may be expanded in a series in powers of λ, and in this way the problem can be reduced to a sequence of problems of linear thermoviscoelasticity in which the kernels of the integral operators are no longer functions of the coordinates, and which can be solved by conventional methods. Some general theorems on the small parameter method are proved. The proposed method is illustrated by solving the problem of a viscoelastic tube under internal pressure reinforced on the outside by a thin elastic shell. The author also considers solution of an auxiliary problem on determining the temperature field $T(x_k,t)$ in a thick-walled cylindrical tube. The convergence of the small-parameter method is estimated. For the case where the temperature-time analogy is not applicable, use of the "elastic" solutions method is discussed. In conclusion, additional equations are given for taking account of heat release in the deformation process. Bibliography of 15 titles. L.Zh.Paperzik.

2/2

APPROVED FOR RELEASE: 09/17/2001 CIA-RDP86-00513R002202430005-3"

"APPROVED FOR RELEASE: 09/17/2001 CIA-RDP86-00513R002202430005-3

USSR

UDC: 539.376+532.135

POBEDRYA, B. Ye.

"On Solving Problems of Thermoviscoelasticity With a Nonhomogeneous Temperature Field"

V sb. Uprugost' i neuprugost'. Vyp. 1 (Elasticity and Inelasticity--collection of works, No 1), Moscow, Moscow University, 1971, pp 172-201 (from RZh-Mekhanika, No 5, May 72, Abstract No 5V455)

Translation: The author proposes a method of solving nonisothermal problems of linear viscoelasticity if the nonuniform temperature field $T(x_k,t)$ is preassigned. The method is based on using a modified principle of temperature--time analogy and reduces to the method of the small parameter: from the known temperature field, the temperature displacement function $f(x_k,t) = 1/a_T(x_k,t)$ is found and written in the form

$$f(x_k, t) \approx f_0(t)\left\{1+\lambda\frac{f(x_k, t)-f_0(t)}{f_0(t)}\right\}$$

where $f_0(t) \equiv \langle f(x_k,t)\rangle$. Here averaging may be done, for instance with respect to volume occupied by the body. In this case the expression for the

1/2

APPROVED FOR RELEASE: 09/17/2001 CIA-RDP86-00513R002202430005-3"

"APPROVED FOR RELEASE: 09/17/2001 CIA-RDP86-00513R002202430005-3

USSR

POBEDRYA, B. Ye., Uprugost' i neuprugost'. Vyp. 1, Moscow, Moscow University, 1971, pp 172-201

reduced time assumes the form

$$t' = \int_0^t \frac{d\xi}{a_T(\xi)} = \int_0^t f_0(t)\,dt + \lambda \int_0^t |f(x_k, t) - f_0(t)|\,dt$$

Considering the numerical parameter λ as a small parameter, the relaxation kernel may be expanded in a series in powers of λ, and in this way the problem can be reduced to a sequence of problems of linear thermoviscoelasticity in which the kernels of the integral operators are no longer functions of the coordinates, and which can be solved by conventional methods. Some general theorems on the small parameter method are proved. The proposed method is illustrated by solving the problem of a viscoelastic tube under internal pressure reinforced on the outside by a thin elastic shell. The author also considers solution of an auxiliary problem on determining the temperature field $T(x_k,t)$ in a thick-walled cylindrical tube. The convergence of the small-parameter method is estimated. For the case where the temperature--time analogy is not applicable, use of the "elastic" solutions method is discussed. In conclusion, additional equations are given for taking account of heat release in the deformation process. Bibliography of 15 titles. L.Kh.Papernik.
2/2

APPROVED FOR RELEASE: 09/17/2001 CIA-RDP86-00513R002202430005-3"

"APPROVED FOR RELEASE: 09/17/2001 CIA-RDP86-00513R002202430005-3

USSR UDC 539.376+532.135

POBEDRYA, B. Ye.

"Methods of Nonlinear Viscoelasticity"

Nauch. tr. In-t mekh. Mosk. un-ta (Scientific Works. Institute of Mechanics of Moscow University), 1971, No 8, pp 47-74 (from RZh-Mekhanika, No 10, Oct 71, Abstract No 10V351)

Translation: The author considers methods of successive approximation which are used in solving an extensive class of problems within the framework of various special theories of nonlinear viscoelasticity. Proofs are given for some general theorems, and in particular theorems of the existence and uniqueness of solutions of the quasistatic problem of viscoelasticity for: 1) a nonlinear anisotropic viscoelastic medium; 2) a principal quasilinear incompressible viscoelastic medium; 3) a principal quasilinear viscoelastic medium; 4) a principal quasilinear viscoelastic medium which is quadratic along the deviators with momentary linear elasticity. Theorems on the convergence of linear approximations are also considered for all enumerated cases. A general method is given for improving

1/2

APPROVED FOR RELEASE: 09/17/2001 CIA-RDP86-00513R002202430005-3"

"APPROVED FOR RELEASE: 09/17/2001 CIA-RDP86-00513R002202430005-3

USSR

POBEDRYA, B. Ye., Nauch. tr. In-t mekh. Mosk. un-ta, 1971, No 8, pp 47-74

convergence. As an example, the author solves the problem of pressure on a nonlinear viscoelastic space which conforms to relations of the cubic theory of viscoelasticity on the side of a spherical cavity. Bibliography of 13 titles. L. Kh. Papernik.

2/2

APPROVED FOR RELEASE: 09/17/2001 CIA-RDP86-00513R002202430005-3"

"APPROVED FOR RELEASE: 09/17/2001 CIA-RDP86-00513R002202430005-3

USSR

UDC: 539.374+517.93

POBEDRYA, B. Ye.

"Convergence of the Method of "Elastic" Solutions in Nonlinear Viscoelasticity"

Moscow, Doklady Akademii Nauk SSSR, Vol 195, No 2, 1970, pp 307-310

Abstract: A quasilinear viscoelastic incompressible medium is studied, in which the relationship between the stress deviators s_{ij} and deformation deviators e_{ij} is

$$s_{ij} = \int_0^t \Gamma(t-\tau)e_{ij}(\tau)d\tau - \int_0^t \Gamma_\phi(t-\tau)\phi(e)e_{ij}(\tau)d\tau,$$

where $e \equiv e_{ij}(\tau)e_{ij}(\tau) = e^2_u(\tau)$. The linear kernel of relaxation $\Gamma(t)$ and nonlinear kernel $\Gamma_\phi(t)$ are divided into singular and regular components.

1/2

APPROVED FOR RELEASE: 09/17/2001 CIA-RDP86-00513R002202430005-3"

"APPROVED FOR RELEASE: 09/17/2001 CIA-RDP86-00513R002202430005-3

USSR

POBEDRYA, B. Ye., Moscow, Doklady Akademii Nauk SSSR, Vol 195, No 2, 1970, pp 307-310

If $\Gamma_\phi = 0$, the corresponding theory is called the main quasilinear theory with instantaneous linear elasticity. The quasistatic problem of this theory of viscoelasticity consists of integration of three equilibrium equations relative to the vector of displacements u under certain boundary conditions. The solution of these problems is determined in space H produced by closing the set of twice continuously differentiable vector functions satisfying conditions $u|_\Sigma = 0$ in the case of the first boundary problem.

2/2

APPROVED FOR RELEASE: 09/17/2001 CIA-RDP86-00513R002202430005-3"

"APPROVED FOR RELEASE: 09/17/2001 CIA-RDP86-00513R002202430005-3

USSR UDC 621.762.3(088.8)

POBEGAYLO, G. G., TARNOPOL'SKIY, B. M., and KIRPICHEV, A. D., Institute of Ferrous Metallurgy

"Device for Mixing Powdered Materials"

USSR AUthors' Certificate No 272320, Cl. 18a, 1/02 (C 21 b 1/02), filed 23 Mar 68, published 1 Sep 70 (from RZh-Metallurgiya, No 3, Mar 71, Abstract No 3G416P)

Translation: The device for mixing powdered materials in a fluidized bed is a vessel operating under pressure with an aerating grid and piping system. In order to lessen entrainment by spent gas of the materials being mixed, a filtering element is built into the top of the vessel and around it is mounted spiral piping with holes for venting the compressed gas that is fed in to clean the filtering element. One illustration.

1/1

APPROVED FOR RELEASE: 09/17/2001 CIA-RDP86-00513R002202430005-3"

"APPROVED FOR RELEASE: 09/17/2001 CIA-RDP86-00513R002202430005-3

USSR

UDC 620.198:621.785.53

KALICHAK, T. N., POKIMURSKIY, V. I., POBEREZHNYY, Ya. L., ALEKSEYENKO, M. F., MEL'NIKOVA, N. N., Academy of Sciences Institute of Physics and Mechanics, L'vov; Moscow.

"Influence of Galvanic and Nonmetallic Coatings on Endurance of Martensitic Stainless Steel"

Kiev, Fiziko-khimicheskaya Mekhanika Materialov, Vol 8, No 4, 1972, pp 12-15.

Abstract: This work describes a study of the influence of galvanic (nickel-cadmium) and polymer coatings on the strength of type 1Kh12N2VMF stainless steel under cyclical loading at various temperatures and in the presence of corrosive media. Before the coatings were applied, the specimens were heat treated by hardening from 1,020°C and tempering at 660°C (3 hours), as well as low temperature annealing at 725°C (3 hours). Metallographic studies showed that application of the nickel-cadmium coating to the surface formed an even, thin layer with a total thickness of 9 to 15 μ, the cadmium layer being 2 to 3 μ thick. The nickel-cadmium coating has a negative influence on the endurance limit in air, but more than doubles the corrosion fatigue resistance in 3% NaCl. Nickel-cadmium coatings protect steel well from the effects of high temperatures. The polymer coating, about 0.1 mm thick, had

1/2

APPROVED FOR RELEASE: 09/17/2001 CIA-RDP86-00513R002202430005-3"

"APPROVED FOR RELEASE: 09/17/2001 CIA-RDP86-00513R002202430005-3

USSR UDC 620.198:621.785.53

KALICHAK, T. N., POKHMURSKIY, V. I., et. al., Kiev, Fiziko-khimicheskaya Mekhanika, Materialov, Vol 8, No 4, 1972, pp 12-15.

no influence on the endurance of the steel in air, but more than tripled the corrosion fatigue resistance in 3% NaCl. The effect was maximum with high loading amplitudes and fewer cycles (up to 10^7). Corrosive damage to the metal beneath the polymer coating was found to result primarily from damage to the polymer coating caused by the loading stress, allowing the corrosive medium to penetrate through the coating to the steel.

2/2

APPROVED FOR RELEASE: 09/17/2001 CIA-RDP86-00513R002202430005-3"

"APPROVED FOR RELEASE: 09/17/2001 CIA-RDP86-00513R002202430005-3

USSR UDC 615.919.591.145.2.615.918:58.615.9:576.8.097.29

POBEREZHSKAYA, T. I., KIREYEVA, V. F., and ZOLOTOVITSKAYA, L. A.

"Effect of Bee Venom on the Bile Formation in Dogs"

Uch. zap. Gor'kov. un-t. Ser. biol. (Educational Proceedings of the Gor'kov University, Biological Series), Vyp 40, 1972, pp 9-13 (from Referativnyy Zhurnal -- Farmakologiya. Khimioterapevticheskiye Sredstva. Toksikologiya, No 1, 1973, Abstract No 1.54.787 by V. K.)

Translation: Dogs which had been given 1 mg/kg of native bee venom (BV) tended to decrease bile production during the first day after the injection of BV then to double its secretion during the second and third days, then gradually to return to normal. The amount of cholesterol separated with the bile in the three-hour experiment on the day of the BV injection practically did not change. By the third day it had increased three-fold and was normal by the sixth to the eighth day. The amount of hematoidin separated with the bile increased during the second or third day and returned to normal on the sixth to the eighth day.

1/1

APPROVED FOR RELEASE: 09/17/2001 CIA-RDP86-00513R002202430005-3"

"APPROVED FOR RELEASE: 09/17/2001 CIA-RDP86-00513R002202430005-3

ARMY/FSTC

DEPARTMENT OF THE ARMY
U.S. ARMY FOREIGN SCIENCE AND TECHNOLOGY CENTER
220 SEVENTH STREET N.E.
CHARLOTTESVILLE, VIRGINIA 22901

TRANSLATION

In Reply Refer to:
FSTC-HT 23-20-73
DIA Task No. T70-23-01

Date: 20 October 1973

ENGLISH TITLE: TUNNEL DIODE PHASE SHIFTER. Soviet Patent 176318

SOURCE: USSR Patent 176318

AUTHOR: Poberezhskiy, Ye.S.

LANGUAGE: Russian

REQUESTOR: AMST-CE Texas
TRANSLATOR: Universal Language Services, Inc.
COUNTRY: USSR

POBEREZHSKIY, Ye.S.

NOTICE

The contents of this publication have been translated as presented in the original text. No attempt has been made to verify the accuracy of any statement contained herein. This translation is published with a minimum of copy editing and graphics preparation in order to expedite the dissemination of information.

Approved for public release. Distribution unlimited.

APPROVED FOR RELEASE: 09/17/2001 CIA-RDP86-00513R002202430005-3"

"APPROVED FOR RELEASE: 09/17/2001 CIA-RDP86-00513R002202430005-3

USSR UDC: 521.372.01-501.12

KOSTAREV, V. Ye., POBEREZHSKIY, Ye. S., KHAZAN, V. L., KHMYROVA, N. F.

"On the Problem of Modeling a Linear Communications Channel With Distortions of Frequency Characteristics"

V sb. Raschety radiotekhn. skhem i proyektir. radioapparatury (Calculations of Radio Circuits and Design of Radio Equipment--collection of works), Omsk, 1970, pp 23-31 (from RZh-Radiotekhnika, No 6, Jun 71, Abstract No 6A92)

Translation: The authors consider a linear communications channel as a two-terminal pair. The only limitations imposed are on the gating pole or on the width of the signal spectrum. Analysis is carried out for three versions of the two-terminal pair: a network which introduces only amplitude distortions; a network which introduces only phase distortions; and a network which introduces distortions of both types. Models are constructed for all three types of two-terminal pair networks. The first network is a cascade connection of an inertialess link and a long line with taps to an adder through attenuators and phase shifters. In particular, the proposed method can be used to simulate momentary realization of a communications channel with random parameters. Four illustrations, bibliography of eight titles. N. S.

1/1

APPROVED FOR RELEASE: 09/17/2001 CIA-RDP86-00513R002202430005-3"

"APPROVED FOR RELEASE: 09/17/2001 CIA-RDP86-00513R002202430005-3

1/2 013 UNCLASSIFIED PROCESSING DATE--20NOV70

TITLE--DETERMINATION OF THE COMPOSITION AND STABILITY CONSTANTS OF OXALATE COMPLEXES OF NIOBIUM AND TANTALUM BY A SOLUBILITY METHOD -U-

AUTHOR-(02)-ZHURENKOV, E.M., POBEZHIMOVSKAYA, D.N.

COUNTRY OF INFO--USSR

SOURCE--RADIOKHIMIYA 1970, 12(1), 105-12

DATE PUBLISHED--------70

SUBJECT AREAS--CHEMISTRY

TOPIC TAGS--OXALATE, COMPLEX COMPOUND, NIOBIUM COMPOUND, TANTALUM COMPOUND, CHEMICAL STABILITY

CONTROL MARKING--NO RESTRICTIONS

DOCUMENT CLASS--UNCLASSIFIED

PROXY REEL/FRAME--3002/1205 STEP NO--UR/0186/70/012/001/0105/0112

CIRC ACCESSION NO--AP0128623

UNCLASSIFIED

APPROVED FOR RELEASE: 09/17/2001 CIA-RDP86-00513R002202430005-3"

"APPROVED FOR RELEASE: 09/17/2001 CIA-RDP86-00513R002202430005-3

2/2 013 UNCLASSIFIED PROCESSING DATE--20NOV70

CIRC ACCESSION NO--AP0128623

ABSTRACT/EXTRACT--(U) GP-0- ABSTRACT. THE TECHNIQUE OF SHVEDOV, ET AL. (1966) WAS USED TO STUDY NB AND TA COMPLEXES IN OXALIC ACID SOLNS. THE FOLLOWING COMPLEXES EXIST AT A PH BETWEEN MINUS 0.3 AND 0.55: H(NB(C SUB2 O SUB2 O SUB4), H(NB(C SUB2 O SUB4) SUB2), H SUB5 (NB(C SUB2 O SUB4) SUB3) (I), H(TA(C SUB2 O SUB4) SUB2), AND H SUB5(TA(C SUB2 O SUB4) SUB3) (II); IN ADDN., AT A NB CONCN. (IN THE SOLN.) OF 0.075 MGL. PER DM PRIME3, ABOUT 50PERCENT OF THE NB IS PRESENT AS A POLYNUCLEAR COMPLEX, PROBABLY H SUB2 (NB SUB2 O SUB2 (C SUB2 O SUB4) SUB4). THE TRIOXALATE COMPLEXES I AND II ARE STABLE ONLY AT PH GREATER THAN 0.1 AND THE OTHER COMPLEXES ARE PREDOMINANT AT LOWER PH; THE PARTIAL INSTABILITY CONSTS. OF I AND II (K SUB5) ARE 6.17 AND 5.91, RESP.

UNCLASSIFIED

APPROVED FOR RELEASE: 09/17/2001 CIA-RDP86-00513R002202430005-3"

"APPROVED FOR RELEASE: 09/17/2001 CIA-RDP86-00513R002202430005-3

USSR UDC: 621.791.756

YUSHCHENKO, K.A., PONIZOVTSEV, A.M., FOMIN, V.V., POBOL', A.A., and SENDYUK, M.A.

"Increase in Electroslag Welding Efficiency"

Kiev, Avtomaticheskaya Svarka, No 5, May 70, pp 72-73

Abstract: A technique was described for increasing electroslag welding efficiency. Experiments were conducted on an A-535 commercial device with a modified head. The electrode was preheated from a self-contained DC source. Heating was regulated by changing the current value of the source by lowering or increasing the resistance between the contacts of this current supply. The best results were attained by heating the wire to a temperature close to the melting point. In the experiments, 3-mm-diameter 06Kh19N9T welding wire and AN-14 flux were used to weld plates made of Kh18N10T and Kh17N13M3T steels. The following advantages were established for electroslag welding with preheated electrode: the time for the transition from the arc process to the slag process is shortened considerably; the electrode wire melts in the upper part of the slag bath, even at a high feed rate; the volume of the slag bath can be decreased sharply without disturbing the stability of the process and worsening the seam-forming conditions; welding current can be reduced by 25-30%; and welding efficiency rises 1.5-2.0 times. Mechanical tests of the seam metal showed its high quality. A considerable rise can be expected in electroslag process efficiency upon complementary preheating of the electrode in arc

1/2

APPROVED FOR RELEASE: 09/17/2001 CIA-RDP86-00513R002202430005-3"

"APPROVED FOR RELEASE: 09/17/2001 CIA-RDP86-00513R002202430005-3

USSR

YUSHCHENKO, K.A., et al, Avtomaticheskaya Svarka, No 5, May 70, pp 72-73

welding with forced forming under flux or in shielding gas, in welding with wire made of powdered material, and in electroslag or arc plasma remelting.

2/2

APPROVED FOR RELEASE: 09/17/2001 CIA-RDP86-00513R002202430005-3"

"APPROVED FOR RELEASE: 09/17/2001 CIA-RDP86-00513R002202430005-3

USSR UDC 669.292.053.24

SUKHARNIKOV, YU. I., GALYUTIN, V. K., POBORTSEV, M. E., and KUNAYEV, A. M.

"Effect of Certain Factors on the Process of Pellet Production During Electrothermic Production of Phosphorus"

O vliyanii nekotorykh faktorov na protsess polucheniya okatyshey pri elektrotermicheskom proizvodstve fosfora (cf. English above), Institute of Metallurgy and Beneficiation of the Kazakh Academy of Sciences, Alma-Ata, 1970, 15 pp, ill., bibliogr., 1 nazv. (from RZH-Metallurgiya, No 11, Nov 70, Abstract No 11G166 DEP)

Translation: In connection with the development of a new flow chart for combined processing of V ore, which contains 70% SiO_2 and 0.85% V_2O_5, with phosphite in the process of their electrothermic smelting, a question arises regarding the utilization of V ore and phosphorite fines, derived during the preparation of the charge for smelting. A possibility of obtaining pellets (O) from the mixture of V ore and phosphorite fines is considered and the effect of different factors on the O strength is studied. The positive effect of the grain size of the material, the quantity of the binder, and the temperature and the time of sintering on the O strength are shown and a mathematical dependence of the O strength on the above cited factors is obtained. The sintering temperature has the most significant effect on the O strength. 5 ill., 5 tables.

1/1 Authors' abstract

APPROVED FOR RELEASE: 09/17/2001 CIA-RDP86-00513R002202430005-3"

"APPROVED FOR RELEASE: 09/17/2001 CIA-RDP86-00513R002202430005-3

UNCLASSIFIED

-- RESISTANCE TO SAPONIFICATION OF SULFOSUCCINIC ACID MONOESTER SALTS IN THE PRESENCE OF MAGNESIUM IONS -U-

PROCESSING DATE--[illegible]70

AUTHOR-(04)-REZNIKOV, I.G., DAVIKA, V.I., BOGACHEVA, S.F., POBORISEVA, L.A.

COUNTRY OF INFO--USSR

SOURCE--MASTO-ZHIR. PROM, 1970, 36(1), 20-3

DATE PUBLISHED-------70

SUBJECT AREAS--CHEMISTRY, MATERIALS

TOPIC TAGS--SAPONIFICATION, ORGANIC SULFUR COMPOUND, SUCCINIC ACID, MAGNESIUM SULFATE, CALCIUM COMPOUND, COPPER COMPOUND, DETERGENT

CONTROL MARKING--NO RESTRICTIONS

DOCUMENT CLASS--UNCLASSIFIED

PROXY REEL/FRAME--1989/0518

STEP NO--UR/9085/70/036/001/0020/0023

CIRC ACCESSION NO--AP0107123

UNCLASSIFIED

APPROVED FOR RELEASE: 09/17/2001 CIA-RDP86-00513R002202430005-3"

"APPROVED FOR RELEASE: 09/17/2001 CIA-RDP86-00513R002202430005-3

UNCLASSIFIED PROCESSING DATE--13NOV70

2/2 010

CIRC ACCESSION NO--AP0107123

ABSTRACT/EXTRACT--(U) GP-0- ABSTRACT. RESISTANCE TO SAPON. OF SULFOSUCCINIC ACID MONOESTERS IN AN ALK. MEDIUM IS GREATLY INCREASED BY ADDN. OF MG, CA, OR CU SALTS. IN COMPNS. CONTG. 12.5PERCENT ACTIVE SUBSTANCE PARENTHESIS DI-NA SALT OF MONOALKYL SUCCINATE (ALKYL DERIVED FROM SPERMACETI ALC.) (I) PARENTHESIS, 20PERCENT NA POLYPHOSPHATE, 1PERCENT NA SILICATE, 12-15PERCENT NA SUB2 SO SUB4, REST H SUB2 O, A PART OF NA SUB2 SO SUB4 WAS REPLACED BY 4-8PERCENT MGSO SUB4. SAPON. OF I IN SUCH A DETERGENT IN AN ALK. MEDIUM WAS 80-6PERCENT LESS THAN A DETERGENT NOT CONTG. MGSO SUB4. CA AND CU SALTS HAD A SIMILAR ACTION. WASHING EXPTS. WITH I ALONE AND WITH 8PERCENT MGSO SUB4 HAD 122 AND 130PERCENT, RESP., OF THE DETERGENT EFFICIENCY OF NA LAURYL SULFATE.

UNCLASSIFIED

APPROVED FOR RELEASE: 09/17/2001 CIA-RDP86-00513R002202430005-3"

"APPROVED FOR RELEASE: 09/17/2001 CIA-RDP86-00513R002202430005-3

USSR

UDC 8.74

DOLYATOVSKIY, V., POBUKOVSKIY, M., VILLYAR, ZH.

"Automated Transmission Program in COBOL"

V sb. Teoriya i praktika mash. obrabotki inform. (Theory and Practice of Machine Data Processing — collection of works), Rostov-na-Donu, 1971, pp 6-15 (from RZh-Kibernetika, No 7, Jul 72, Abstract No 7V637)

No abstract

1/1

APPROVED FOR RELEASE: 09/17/2001 CIA-RDP86-00513R002202430005-3"

"APPROVED FOR RELEASE: 09/17/2001 CIA-RDP86-00513R002202430005-3

USSR

UDC: 8.74

POBUKOVSKIY, M. G.

"A Computer Program for Search and Arbitrary Translation of Scientific Terms"

V sb. Teoriya i praktika mash. obrabotki inform. (Theory and Practice in Computer Processing of Information--collection of works), Rostov-na-Donu, 1971, pp 15-23 (from RZh-Kibernetika, No 6, Jun 72, Abstract No 6V519)

[No abstract]

1/1

APPROVED FOR RELEASE: 09/17/2001 CIA-RDP86-00513R002202430005-3"

"APPROVED FOR RELEASE: 09/17/2001 CIA-RDP86-00513R002202430005-3

USSR

UDC: 621.398.08

AVTUSHKO, V. M. and POCHAPSKIY, V. I.

"Switching Device for Separating and Detecting Operative Information"

V sb. Tonkiye magnitn. plenki, vychisl. tekhn. i radiotekhn. T I (Thin Magnetic Tape, Computer and Electronic Engineering, Vol. I-- collection of works) Krasnoyarsk, 1971, pp 143-146 (from RZh-Avtomatika, telemekhanika i vychislitel'naya tekhnika, No. 12, 1971 Abstract No. 12A206)

Translation: Standard telemechanical devices of the "Kolos" (1"10) [sic] type are used for transmitting information from gas-decontaminated buildings to the dispatcher point of the Kremenchug Automobile Plane reclamation shop. The specialized switching equipment switches the telemechanical complexes and separates and detects the information at the outputs of the device. A controlling system receives and records urgent information in an intermediate receiving register. An assembly of flip-flop registers in the second part of the equipment performs functions independently of the type of telemetering system. The order of information recording in the constant receiving registers is described. Some important technical data is given.

1/1

APPROVED FOR RELEASE: 09/17/2001 CIA-RDP86-00513R002202430005-3"

"APPROVED FOR RELEASE: 09/17/2001 CIA-RDP86-00513R002202430005-3

USSR

UDC 577.1:615.7/9

POCHASHEV, Ye. N.

"Comparative Morphological Characteristics of Early Lung Changes Induced by Injection of Soviet, Canadian, and South Rhodesian Chrysotile Asbestos"

V sb. Vopr. gigiyeny truda i prof. patol. v metallurgi (Problems of Industrial Hygiene and Occupational Diseases in Metallurgy--Collection of Works), Moscow, 1972, pp 263-267 (from RZh-Biologicheskaya Khimiya, No 17 Sep 73, Abstract No 17 F1929)

Translation: Intratracheal injection of rats with dust from different kinds of chrysotile asbestos (I) resulted in the formation of numerous nodules of dust cells and development therein of collagen fibers of the connective-tissue membrane. South Rhodesian I stimulated development of fibrous tissue the most.

1/1

APPROVED FOR RELEASE: 09/17/2001 CIA-RDP86-00513R002202430005-3"

"APPROVED FOR RELEASE: 09/17/2001 CIA-RDP86-00513R002202430005-3

USSR UDC 615.272.2:547.821.4.03:616.24-003.662-092.9

KATSNEL'SON, B. A., BABUSHKINA, L. G., ARONOVA, G. V., STARIKOVA, S. K., POCHASHEV, Ya. N., SHNAYDMAN, I. Ya., POSTOVSKIY, S. N., BOGODILINA, S. N., and MALYARENKO, I. S., Sverdlovsk Institute of Industrial Hygiene and Occupational Diseases, and Karaganda Institute of Industrial Hygiene and Occupational Diseases and Ural Polytechnic Institute, Sverdlovsk

"Experimental Study of the Protective Effect of Polyvinylpyridine-N-Oxide Against Silicosis"

Moscow, Gigiyena i Sanitariya, No 10, Oct 1970, pp 20-23

Abstract: A polyvinylpyridine-N-oxide polymer with a molecular weight of 117,500 was prepared, and its activity and effectiveness against silicosis were compared with those of a previously prepared polymer of molecular weight 40,000 and the P-204 polymer (Bayer, West Germany). It was found that the new polymer was more effective than either of the other two polymers against intratracheal dust (cristobalite) introduced in rats for a period of 3-1/2 months. Development of silicosis was sharply reduced, as indicated by the decrease in size and number of cellular-dust lumps and the reduction in proliferating reactions, and sclerotic shifts.

1/2

APPROVED FOR RELEASE: 09/17/2001 CIA-RDP86-00513R002202430005-3"

"APPROVED FOR RELEASE: 09/17/2001 CIA-RDP86-00513R002202430005-3

USSR

KATSNEL'SON, B. A., et al, Gigiyena i Sanitariya, No 10, Oct 1970, pp 20-23

Dust elimination from the lungs and inhibition of the silicotic fibrogenesis process are associated with an increase in the resistance of the alveolar coniophages to the cytopathic effect of silicon. It was found that this process was accompanied by a decrease in the diffusion of a lysosome hydrolytic enzyme (acid phosphatase) into the cytoplasm of macrophages due to the effect of silicon, a fact which is attributed to the anti-silicosis effect of the new polyvinylpyridine-N-oxide polymer.

2/2

APPROVED FOR RELEASE: 09/17/2001 CIA-RDP86-00513R002202430005-3"

"APPROVED FOR RELEASE: 09/17/2001 CIA-RDP86-00513R002202430005-3

1/2 019 UNCLASSIFIED PROCESSING DATE--18SEP70

TITLE--DATA FOR HYGIENIC ASSESSMENT OF ASBOZURITE AND SOVELITE DUST CONTAINING ASBESTOS -U-

AUTHOR-(03)-KOGAN, F.M., SVIRSKIY, E.L., POCHASHEV, YE.N.

COUNTRY OF INFO--USSR

SOURCE--GIGIYENA I SANITIARIYA, 1970, NR 3, PP 19-23

DATE PUBLISHED-------70

SUBJECT AREAS--BIOLOGICAL AND MEDICAL SCIENCES

TOPIC TAGS--ASBESTOS, INDUSTRIAL HYGIENE, RESPIRATORY SYSTEM DISEASE

CONTROL MARKING--NO RESTRICTIONS

DOCUMENT CLASS--UNCLASSIFIED

PROXY REEL/FRAME--1985/0458 STEP NO--UR/0240/70/000/003/0019/0023

CIRC ACCESSION NO--AP0100936

UNCLASSIFIED

APPROVED FOR RELEASE: 09/17/2001 CIA-RDP86-00513R002202430005-3"

"APPROVED FOR RELEASE: 09/17/2001 CIA-RDP86-00513R002202430005-3

2/2 019 UNCLASSIFIED PROCESSING DATE--18SEP70

CIRC ACCESSION NO--AP0100936

ABSTRACT/EXTRACT--(U) GP-0- ABSTRACT. THE ASBOZURITE DUST CONTAINING ASBESTOS IN FREE MIXTURE WITH DIATOMITE WAS FOUND TO BE MORE FIBROGENIC THAN SOVELITE DUST CONTAINING FIBERS COVERED WITH A BINDING SUBSTANCE (WHITE MAGNESIUM AND CALCIUM CARBONATE). AMONG PERSONS WITH A SUFFICIENTLY LONG RECORD OF WORK UNDER EXPOSITION TO ASBOZURITE DUST SEVERAL MEN PRESENTED SUSPICIOUS SIGNS OF PNEUMOCONIOSIS. IN HYGIENIC ASSESSMENT OF DUST CONTAINING ASBESTOS IT IS NECESSARY TO CONSIDER, BESIDES ITS CONTENT, THE PRESENCE OF A BINDING COMPONENT AND THE TYPE OF CONNECTION EXISTING BETWEEN THEM.

UNCLASSIFIED

APPROVED FOR RELEASE: 09/17/2001 CIA-RDP86-00513R002202430005-3"

"APPROVED FOR RELEASE: 09/17/2001 CIA-RDP86-00513R002202430005-3

1/2 006 UNCLASSIFIED PROCESSING DATE--13NOV70

TITLE--WORLD RESOURCES OF PETROLEUM -U-

AUTHOR--PUCHEKUTOVA, YE.A.

COUNTRY OF INFO--WORLD WIDE

SOURCE--MIROVYYE RESURSY NEFTI, MOSCOW, NEDRA, 1970, 116 PP (SL:2494)

DATE PUBLISHED-------70

SUBJECT AREAS--MATERIALS, EARTH SCIENCES AND OCEANOGRAPHY

TOPIC TAGS--GEOGRAPHIC LOCATION, CRUDE OIL, PETROLEUM DEPOSIT

CONTROL MARKING--NO RESTRICTIONS

DOCUMENT CLASS--UNCLASSIFIED

PROXY REEL/FRAME--3006/0018 STEP NO--UR/0000/70/000/000/0001/0116

CIRC ACCESSION NO--A0133507

APPROVED FOR RELEASE: 09/17/2001 CIA-RDP86-00513R002202430005-3"

"APPROVED FOR RELEASE: 09/17/2001 CIA-RDP86-00513R002202430005-3

2/2 006 UNCLASSIFIED PROCESSING DATE--13NOV70

CIRC ACCESSION NO--AM0133907

ABSTRACT/EXTRACT--(U) GP-0- ABSTRACT. TABLE OF CONTENTS: INTRODUCTION 3. WORLD RESOURCES OF PETROLEUM 7. DISTRIBUTION OF EXPLORED PETROLEUM RESERVES 21. INCREASE OF PETROLEUM RESERVES AND INTENSITY OF FILL IN OF PETROLEUM RESERVES 56. PROSPECTS FOR THE DEVELOPMENT OF WORLD PETROLEUM RESOURCES 59. UNIVERSAL PETROLEUM EXTRACTION 64. INCREASE OF PETROLEUM EXTRACTION 68. SECURITY OF OIL EXTRACTION FROM PROVEN RESERVES 69. APPENDIX 74. BIBLIOGRAPHY 114. THE BOOK CONTAINS A BRIEF REVIEW ON THE DISTRIBUTION OF WORLD RESOURCES OF PETROLEUM AND THE STATE OF PETROLEUM INDUSTRY AT THE PRESENT TIME; DISCUSSED ARE BASIC FACTORS WHICH EFFECT THE ECONOMIC EVALUATION OF PETROLEUM RESOURCES. THE STATISTICAL DATA ARE BASED ON INFORMATION PUBLISHED IN SOVIET AND FOREIGN LITERATURE.

UNCLASSIFIED

APPROVED FOR RELEASE: 09/17/2001 CIA-RDP86-00513R002202430005-3"

"APPROVED FOR RELEASE: 09/17/2001 CIA-RDP86-00513R002202430005-3

1/2 014 UNCLASSIFIED PROCESSING DATE--30OCT70

TITLE--ACTIVITY COEFFICIENTS AND IONIZATION CONSTANTS OF SOME NITROACETANILIDES AND NITROANILIDES IN AQUEOUS POTASSIUM HYDROXIDE

AUTHOR-(02)-POCHIKYAN, A.KH., VINNIK, M.I.

COUNTRY OF INFO--USSR

SOURCE--IZV. AKAD. NAUK SSSR, SER. KHIM. 1970. (2), 300-6

DATE PUBLISHED--------70

SUBJECT AREAS--CHEMISTRY

TOPIC TAGS--SOLUBILITY, DISTRIBUTION COEFFICIENT, ANILINE, ORGANIC NITRO COMPOUND, ACETANILIDE

CONTROL MARKING--NO RESTRICTIONS

DOCUMENT CLASS--UNCLASSIFIED

PROXY REEL/FRAME--1997/0825 STEP NO--UR/0062/70/000/002/0300/0306

CIRC ACCESSION NO--AP0119729

UNCLASSIFIED

APPROVED FOR RELEASE: 09/17/2001 CIA-RDP86-00513R002202430005-3"

"APPROVED FOR RELEASE: 09/17/2001 CIA-RDP86-00513R002202430005-3

2/2 014 UNCLASSIFIED PROCESSING DATE--30OCT70

CIRC ACCESSION NO--AP0119729

ABSTRACT/EXTRACT--(U) GP-0- ABSTRACT. SOLY. DATA AND DISTRIBUTION COEFFS. WERE TABULATED FOR ACNMEC SUB6 H SUB4 NO SUB2 ISOMERS IN AQ. KOH AND INERT SOLVENTS. THE ACTIVITY COEFFS. OF THESE SOLUTES AND THE RELATED ANILINES WERE OBTAINED FROM SPECTROPHOTOMETRIC MEASUREMENTS. THE VARIATION OF ACTIVITY COEFFS. WITH CONCN. CAN BE EXPRESSED IN TERMS OF EITHER THE SECHENOV EQUATION OR OF EMPIRICAL EQUATIONS DEVELOPED FOR EACH CLASS OF SOLUTE. FACILITY: INST. KHIM. FIZ., MOSCOW, USSR.

UNCLASSIFIED

APPROVED FOR RELEASE: 09/17/2001 CIA-RDP86-00513R002202430005-3"

"APPROVED FOR RELEASE: 09/17/2001 CIA-RDP86-00513R002202430005-3

1/2 016 UNCLASSIFIED PROCESSING DATE--18SEP70

TITLE--EXPANSION OF THE SPECTRAL REGION OF LIGHT SENSITIVE VARIATION IN THE VOLUME OF THIN COLOPHONY FILMS -U-

AUTHOR-(05)-KUVSHINSKIY, N.G., TANTSYURA, L.YA., FEDOROVA, L.N., NAKHOOKIN, N.G., POCHINOK, V.YA.

COUNTRY OF INFO--USSR

SOURCE--ZH. NAUCH. PRIKL. FOTOGR. KINEMATOGR. 1970, 15(1), 57-9

DATE PUBLISHED--------70

SUBJECT AREAS--METHODS AND EQUIPMENT

TOPIC TAGS--DYE, SPECTRUM, PHOTOSENSITIVITY, PHOTOGRAPHIC FILM

CONTROL MARKING--NO RESTRICTIONS

DOCUMENT CLASS--UNCLASSIFIED

PROXY REEL/FRAME--1983/1485 STEP NO--UR/0077/70/015/001/0057/0059

CIRC ACCESSION NO--AP0054341

UNCLASSIFIED

APPROVED FOR RELEASE: 09/17/2001 CIA-RDP86-00513R002202430005-3"

"APPROVED FOR RELEASE: 09/17/2001 CIA-RDP86-00513R002202430005-3

2/2 016 UNCLASSIFIED PROCESSING DATE--18SEP70

CIRC ACCESSION NO--AP0054341

ABSTRACT/EXTRACT--(U) GP-0- ABSTRACT. THE SPECTRAL SENSITIVITY REGION OF ROSIN (I) ABIETIC ACID (II) FILMS WAS EXPANDED BY PHOTOSENSITIZED O TRANSFER WITH EOSIN, METHYLENE BLUE, OR CHLOROPHYLL (III). THE FILMS WERE EXPOSED TO FILTERED LIGHT FROM AN INCANDESCENT LAMP AND WERE SENSITIZED ONLY IN THE PRESENCE OF O, THE DYE PRESUMABLY CATALYZING THE PHOTOSENSITIZED TRANSFER OF O WHICH CAUSED IRREVERSIBLE CHANGES IN II, THUS INCREASING THE VOL. OF THE IRRADIATED FILMS ON HEATING. THE SENSITIVITY WAS EXTENDED TO INCLUDE THE ENTIRE VISIBLE REGION; FILMS CONTG. III WERE SENSITIVE TO LAMBDA GREATER THAN 630 NM.

UNCLASSIFIED

APPROVED FOR RELEASE: 09/17/2001 CIA-RDP86-00513R002202430005-3"

"APPROVED FOR RELEASE: 09/17/2001 CIA-RDP86-00513R002202430005-3

Acc. Nr. AT0101944 Abstracting Service: CHEMICAL ABST. 6-70 P Ref. Code U20442

111994h Thermomechanical and electrical properties of poly-(butyl methacrylate) polymer homologs. Nizhnik, V. V.; Solomko, V. P.; Zueva, R. A.; Nizhnik, A. S.; Pochinok, V. Ya. (Kiiv. Derzh. Univ., Kiev, USSR). Dopov. Akad. Nauk Ukr. RSR, Ser. B 1970, 32(1), 67-70 (Ukrain). Thermomech. and thermoelec. properties of the title polymer were dependent upon the mol. wt. of the polymer. Considerable changes were observed, esp. for the elec. vol. resistance, during the transition states of the polymer.

O. Elsner

Y1

REEL/FRAME
19851900

CB1

APPROVED FOR RELEASE: 09/17/2001 CIA-RDP86-00513R002202430005-3"

"APPROVED FOR RELEASE: 09/17/2001 CIA-RDP86-00513R002202430005-3

Acc. Nr: AP0102300 Abstracting Service: CHEMICAL ABST. 6-70 Ref. Code: UR0448

111987h Spatial structure formation and thermomechanical characteristics of polymer homologs. Nizhnik, A. S.; Maksimova, Ch. A.; Ushov, I. A.; Pochinok, V. I.; Bondkina, M. S. (Kiiv. Derzh. Univ., Kiev, USSR). *Dopov. Akad. Nauk Ukr. RSR, Ser. A* 1970, 32(1), 54-6 (Ukrain). Thermomech. and rheol. properties of typical amorphous polymer homologs of Bu methacrylate were investigated. A forced flow point (a conditional characteristic of the polymer) and a true flow point (a phys. const. of the polymer) were distinguished. O. Elsner

CB

REEL/FRAME
19860250

APPROVED FOR RELEASE: 09/17/2001 CIA-RDP86-00513R002202430005-3"

"APPROVED FOR RELEASE: 09/17/2001 CIA-RDP86-00513R002202430005-3

Phytology

USSR

UDC 581.116:632.954

POCHINOK, KH. N., Institute of Plant Physiology, Academy of Sciences UKSSR

"The Effect of Herbicides and Antitranspirants on the Intensity of Plant Photosynthesis and Transpiration"

Kiev, Fiziologiya i Biokhimiya Kulturnykh Rasteniy, No 3, 1971, pp 538-544

Abstract: Several herbicides (semeron, atrazine, eptam) were found to inhibit photosynthesis and transpiration in cabbage, sugar beet, sunflower, and amaranth, the degree of inhibition varying with the concentration and biochemical activity of the preparation and duration of exposure, as well as with the biochemical and physiological characteristics of the plants. Instead of the existing methods of testing herbicides, it was suggested that the intensity of photosynthesis and transpiration be determined for individual plant species and the effect of a herbicide on that species be expressed as the coefficient of effectiveness (K_h). With this method one can systematically trace the herbicidal effect on the physiological processes throughout the growing season. The presence of antitranspiration properties in chemical agents can be determined in a similar fashion and their effect expressed as the coefficient of antitranspirant effectiveness (K_h). These indexes can be

1/2

APPROVED FOR RELEASE: 09/17/2001 CIA-RDP86-00513R002202430005-3"

"APPROVED FOR RELEASE: 09/17/2001 CIA-RDP86-00513R002202430005-3

USSR

POCHINOK, KH. N., Fiziologiya i Biokhimiya Kulturnykh Rastenii, No 3, 1971, pp 538-544

used to find the most useful herbicides and the plant varieties most resistant to them.

2/2

APPROVED FOR RELEASE: 09/17/2001 CIA-RDP86-00513R002202430005-3"

"APPROVED FOR RELEASE: 09/17/2001 CIA-RDP86-00513R002202430005-3

4

UDC 77

USSR

AVRAMENKO, L. F., VILENSKIY, YU. B., IVANOV, B. N., OLISHEVSKAYA, L. A., POCHINOK, V. YA., SKRIPNIK, L. I., FEDOROVA, L. N., FEDOROVA, I. P.

"Synthesis of Tetrazoles, Triazoles, Triazenes, and Azo Compounds and a Study of Them as Additives to Silver Halide Photographic Emulsions. II. Photographic Study of Material"

Uspekhi nauchn. fotogr. (Advances in Scientific Photography), 1970, Vol. 14, pp 12-23 (From RZh-Fizika, No 12(I), Dec 70, Abstract No 12D1334)

Translation: Three indices are introduced to evaluate quantitatively various types of photographic activity of materials synthesized previously: (see RZh-Fizika, No12(I), Dec 70, Abstract No 12D1333): stabilizing, depressing, and defogging effects and certain combinations of these parameters in the kinetic curves for sensitivity and fogging in the second aging before and after introduction of the substances tested. If the substance was at the same time an optical sensitizer, the value of the depressing index was negative. Besides the testing of substances in AgCl- and AgBr(I)-emulsions, the kinetics of their adsorption by AgHal, the absorption spectrum in solution and after adsorption by AgHal, and the sensitization spectrum was studied. A correlation

APPROVED FOR RELEASE: 09/17/2001 CIA-RDP86-00513R002202430005-3"

"APPROVED FOR RELEASE: 09/17/2001 CIA-RDP86-00513R002202430005-3

USSR

AVRAMENKO, L.F., et al, Uspekhi nauchn. fotogr., 1970, Vol 14, pp 12-23
was found for condensed

tetrazoles between the stabilizer and the irreversible adsorption of material and between the depressing and defogging agents and reversible adsorption; irreversible adsorption on a small portion of the AgHal surface was sufficient for total stabilization. The same was true for the stabilization of triazenes. Depression of fogging was apparently always associated with the slowing down of the appearance of reversibly adsorbed substances, although in many cases there simultaneously occurred desensitization or slowing down of aging. Certain connections were established between photographic activity and the structure and substitutes in molecules of triazoles and optical sensitizers on the basis of their quaternary salts and also in molecules of heterocyclic azo compounds. The formation of iono-dipole or coordinated compounds of the material with AgHal was necessary for stabilization, which requires the coincidence of their dipole distances; the latter partially explains the differences in the behavior of materials in AgCl- and AgBr(I)-emulsions. One must take into account, however, that in view of the large homeopolarity of the bond in AgBr, even in AgCl, the latter requires more polar stabilizers. 12 references.

2/2

APPROVED FOR RELEASE: 09/17/2001 CIA-RDP86-00513R002202430005-3"

"APPROVED FOR RELEASE: 09/17/2001 CIA-RDP86-00513R002202430005-3

USSR

UDC 622.342:541.183.12

FRIDMAN, I. D., POCHKINA, L. YE., ZDOROVA, E. P., BEK, R. YU., MASLIY, A. I., PUNISHKO, O. A., POCHIVALOV, I. N., and STAFEYEVA, L. B.

"Ion-Exchange Technology in Gold Hydrometallurgy"

Moscow, Tsvetnyye Metally, No 3, Mar 70, pp 70-74

Abstract: Ion-exchange technology permits the use of filter-free systems, thus eliminating both costly equipment and cumbersome operations -- filtration of pulp and washing of precipitates as well as precipitation of Au from solutions. Sorption leaching, which is more complete in dissolving Au from ore and reduces the loss of dissolved gold in the dump pulp, offers much better conditions for higher Au extraction. In order to provide satisfactory results, the new technology requires the use of anionites, which are selective with respect to Au, and also have high kinetic, mechanical, and regeneration properties. The selectiveness of the AP-2 anionite, synthesized at the Kemerov Scientific-Research Institute for the Chemical Industry, was found to be 2--2.5 and its capacity -- 1.3--1.5 times that of similar anionites. The anionite was tested on a semi-industrial unit using a counter-current system. The high desorption capacity of the bifunctional AP-2 anionite with respect to metal impurities makes it possible to simplify the regeneration process and reduce the number of required elements. The process

1/2

APPROVED FOR RELEASE: 09/17/2001 CIA-RDP86-00513R002202430005-3"

"APPROVED FOR RELEASE: 09/17/2001 CIA-RDP86-00513R002202430005-3

USSR

FRIDMAN, I. D., et al, Tsvetnyye Metally, No 3, Mar 70, pp 70-74

includes the following phases: desorption of CN, Zn, and Ni with HNO_3 or H_2SO_4 solutions; desorption of Au, Ag, and Cu by chloride and sulfide solutions or thiourea during electroelution, and disorption of Fe by NH_4NO_3 alkaline solutions at 50--55°C. The high desorption capacity of the AP-2 anionite determines the relatively short duration of the regeneration process: desorption of CN, Zn, and Ni -- 5 hrs; desorption of Au, Ag, Cu during electroelution -- 3--5 hrs; desorption of Fe--5 hrs. The complete procedural flow chart is given in the original article.

2/2

APPROVED FOR RELEASE: 09/17/2001 CIA-RDP86-00513R002202430005-3"

"APPROVED FOR RELEASE: 09/17/2001 CIA-RDP86-00513R002202430005-3

Acc. Nr. AP0030822 Abstracting Service: CHEMICAL ABST. 3-70 Ref. Code 21R0078

60941d The infrared absorption spectra of thiocyanatoberyllates solvated by acetonitrile. Pochkaeva, T. I.; Mikheeva, L. M.; Grigor'ev, A. I.; Ganem, A. (USSR). Zh. Neorg. Khim. 1970, 15(1), 87-91 (Russ). $MBe(NCS)_3 \cdot nMeCN$ (I) and $M_2Be(NCS)_4 \cdot nMeCN$, where M = Cs, Rb, K, or NH_4, were prepd. by conventional metathetical reactions in MeCN. All these compds. have NCS coordinated to Be via N, and I compds. have 1 MeCN coordinated to Be. Presence of bridging NCS was not observed. Frequencies of CS, CN, and NCS are assigned and tabulated. HMJR

REEL/FRAME 19690818

APPROVED FOR RELEASE: 09/17/2001 CIA-RDP86-00513R002202430005-3"

"APPROVED FOR RELEASE: 09/17/2001 CIA-RDP86-00513R002202430005-3

1/2 009 UNCLASSIFIED PROCESSING DATE--11DEC70

TITLE--ION EXCHANGE TECHNOLOGY IN THE HYDROMETALLURGY OF GOLD -U-

AUTHOR-(05)-FRIDMAN, I.D., POCHKINA, L.E., ZDOROVA, E.P., BER, R.YU., MASLIY, A.I.

COUNTRY OF INFO--USSR

SOURCE--TSVET. METAL. 1970, 43(3), 70-4

DATE PUBLISHED--------70

SUBJECT AREAS--MATERIALS

TOPIC TAGS--HYDROMETALLURGY, GOLD, ION EXCHANGER, EXTRACTIVE METALLURGY/(U)APZ ANION EXCHANGER

CONTROL MARKING--NO RESTRICTIONS

DOCUMENT CLASS--UNCLASSIFIED

PROXY REEL/FRAME--3001/1407 STEP NO--UR/0136/70/043/003/0070/0074

CIRC ACCESSION NO--AP0126945

UNCLASSIFIED

APPROVED FOR RELEASE: 09/17/2001 CIA-RDP86-00513R002202430005-3"

"APPROVED FOR RELEASE: 09/17/2001 CIA-RDP86-00513R002202430005-3

2/2 CC9 UNCLASSIFIED PROCESSING DATE--11DEC70

CIRC ACCESSION NO--AP0126945

ABSTRACT/EXTRACT--(U) GP-0- ABSTRACT. A TECHNOL. SCHEMATIC DIAGRAM FOR THE FILTERLESS SORPTION PROCESS IN THE EXTN. OF AU FROM CYANOGEN PULPS BY USE OF ANION EXCHANGER AP 2 IS GIVEN. AP 2, BASED ON CHLOROMETHYLATED COPOLYMER STYRENE DIVINYLBENZENE AND TERTIARY AMINE, WAS SYNTHESIZED UNDER LAB. CONDITIONS. THE INCREASE IN SELECTIVITY OF AP 2 FOR GOLD IS 2-2.5 TIMES AND ITS CAPACITY IS 1.3-1.5 TIMES THAT OF OTHER ANION EXCHANGERS UNDER ANALOGOUS CONDITIONS.

UNCLASSIFIED

APPROVED FOR RELEASE: 09/17/2001 CIA-RDP86-00513R002202430005-3"

"APPROVED FOR RELEASE: 09/17/2001 CIA-RDP86-00513R002202430005-3

USSR

UDC 622.342:541.183.12

FRIDMAN, I. D., POCHKINA, L. YE., ZDOROVA, E. P., BEK, R. YU., MASLIY, A. I., PUNISHKO, O. A., POCHIVALOV, I. N., and STAFEYEVA, L. S.

"Ion-Exchange Technology in Gold Hydrometallurgy"

Moscow, Tsvetnyye Metally, No 3, Mar 70, pp 70-74

Abstract: Ion-exchange technology permits the use of filter-free systems, thus eliminating both costly equipment and cumbersome operations -- filtration of pulp and washing of precipitates as well as precipitation of Au from solutions. Sorption leaching, which is more complete in dissolving Au from ore and reduces the loss of dissolved gold in the dump pulp, offers much better conditions for higher Au extraction. In order to provide satisfactory results, the new technology requires the use of anionites, which are selective with respect to Au, and also have high kinetic, mechanical, and regeneration properties. The selectiveness of the AP-2 anionite, synthesized at the Kemerov Scientific-Research Institute for the Chemical Industry, was found to be 2--2.5 and its capacity -- 1.3--1.5 times that of similar anionites. The anionite was tested on a semi-industrial unit using a counter-current system. The high desorption capacity of the bifunctional AP-2 anionite with respect to metal impurities makes it possible to simplify the regeneration process and reduce the number of required elements. The process

1/2

APPROVED FOR RELEASE: 09/17/2001 CIA-RDP86-00513R002202430005-3"

"APPROVED FOR RELEASE: 09/17/2001 CIA-RDP86-00513R002202430005-3

USSR

FRIDMAN, I. D., et al, Tsvetnyye Metally, No 3, Mar 70, pp 70-74

includes the following phases: desorption of CN, Zn, and Ni with HNO_3 or H_2SO_4 solutions; desorption of Au, Ag, and Cu by chloride and sulfide solutions of thiourea during electroelution, and disorption of Fe by NH_4NO_3 alkaline solutions at 50--55°C. The high desorption capacity of the AP-2 anionite determines the relatively short duration of the regeneration process: desorption of CN, Zn, and Ni -- 5 hrs; desorption of Au, Ag, Cu during electroelution -- 3--5 hrs; desorption of Fe--5 hrs. The complete procedural flow chart is given in the original article.

2/2

APPROVED FOR RELEASE: 09/17/2001 CIA-RDP86-00513R002202430005-3"

"APPROVED FOR RELEASE: 09/17/2001 CIA-RDP86-00513R002202430005-3

USSR

UDC 624.07:534.1

POCHTMAN, Yu. M., FILATOV, G. V.

"Optimal Design of Beams Under Dynamic Loads by the Random Search Method"

Soprotivl. materialov i teoriya sooruzh. Resp. mezhved. nauch.-tekhn. sb. (Resistance of Materials and the Theory of Structures. Republic Interdepartmental Scientific-Technical Collection), 1972, No. 18, pp 72-78 (from RZh-Mekhanika, No 3, Mar 73, Abstract No 3V240)

Translation: Problems of selecting optimal parameters for elastic beams ensuring minimum weight under forced vibrations are discussed. The problem is formulated in nonlinear programming terms where the target function is the minimum of the weight and the restraints are the conditions for strength and also the constraints on the magnitude of the maximum dynamic bending and the geometrical dimensions of the structure. One of the modern methods of optimization, random search (the algorithm of coordinate self-teaching), is applied to the study with the aid of a computer. The results of the calculations, profiles of optimal beams, are given. 6 ref. Authors' abstract.

1/1

APPROVED FOR RELEASE: 09/17/2001 CIA-RDP86-00513R002202430005-3"

"APPROVED FOR RELEASE: 09/17/2001 CIA-RDP86-00513R002202430005-3

USSR

UDC 621.395.623.7

POCHTAR', A. Ya.

"An Electrodynamic Speaker"

Moscow, Otkrytiya, Izobreteniya, Promyshlennyye Obraztsy, Tovarnyye Znaki, No 5, 1970, p 40, patent No 261464, filed 15 Jul 68

Abstract: This Author's Certificate introduces an electrodynamic speaker which contains a magnetic circuit, an acoustic coil and a diffuser. As a distinguishing feature of the patent, the size of the speaker is reduced and its frequency response is improved by making the magnetic system in the form of a parallelepiped with a lyre-shaped cross section, the lower base being solid while the upper base has a slot which serves as the working gap parallel to the long side. A rectangular permanent magnet with a form for the acoustic coil is set lengthwise in the gap and fastened to the base of the lyre.

1/2

APPROVED FOR RELEASE: 09/17/2001 CIA-RDP86-00513R002202430005-3"

"APPROVED FOR RELEASE: 09/17/2001 CIA-RDP86-00513R002202430005-3

USSR

POCHTAR', A. Ya., Otkrytiya, Izobreteniya, Promyshlennyye Obraztsy, Tovarnyye Znaki, No 5, 1970, p 40, patent No 261464, filed 15 Jul 68

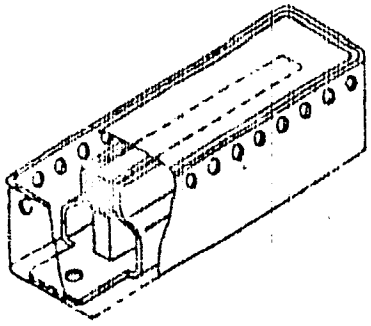

2/2

APPROVED FOR RELEASE: 09/17/2001 CIA-RDP86-00513R002202430005-3"

"APPROVED FOR RELEASE: 09/17/2001 CIA-RDP86-00513R002202430005-3

USSR

Apt 3 Oct 73

In the article "Aurora Borealis in Vicinity of Leningrad" POCHTAREV, V. I., Candidate of Physical-Mathematical Sciences; Director, Leningrad Affiliate, Institute of Terrestrial Magnetism, the Ionosphere, and Propagation of Radio Waves, AS USSR, answers the question of LP reader T. Ulanova as to the possibility of observing the aurora borealis in the vicinity of Volosovskiy Rayon. She stated that she observed a beautiful spectacle similar to it at the end of September but added that no one would believe her. Pochtarev stated that during a magnetic storm and explosions on the sun aurora borealises sometimes reach the equator and that this phenomenon may be observed in Leningrad and Leningrad Oblast in periods of the vernal equinox and autumnal equinox. However, it is not as intensely and strongly expressed as, for example, on the latitude of Murmansk.

Leningradskaya Pravda, 3 Oct 73, p 4, cols 5-7

(1)

APPROVED FOR RELEASE: 09/17/2001 CIA-RDP86-00513R002202430005-3"

"APPROVED FOR RELEASE: 09/17/2001 CIA-RDP86-00513R002202430005-3

Acc. Nr.: AP0042363

Ref. Code: UR0203

JPRS 50162

Method for Computing Earth's Magnetic Field Upward in Space

(Abstract: "Method for Computing the Earth's Magnetic Field Upward in Near-Earth Space," by B. D. Vints, V. I. Pochtarev and R. Sh. Rakhmatulin, Leningrad Division, Institute of Terrestrial Magnetism, Ionosphere and Radio Wave Propagation; Moscow, Geomagnetizm i Aeronomiya, Vol X, No 1, 1970, pp 119-128)

In the compilation of high-altitude maps of the earth's magnetic field in near-earth space the errors arising in scaling are accompanied by errors arising due to inaccuracies in the initial material, that is, in ground, sea and aeromagnetic measurements. By application of the theory of random fields it is demonstrated in this article that with an increase in altitude the influence of errors in initial materials on the accuracy of high-level maps is substantially reduced.

12

Reel/Frame
19760310

APPROVED FOR RELEASE: 09/17/2001 CIA-RDP86-00513R002202430005-3"

"APPROVED FOR RELEASE: 09/17/2001 CIA-RDP86-00513R002202430005-3

USSR

UDC 621.317.7:531.761

DOBRONRAVOV, O. E., PAVLOVA, G. YA., and POCHTAREV, V. L.

"High-Speed Thyratron of a Nanosecond Measuring Device of Time Intervals"

V sb. Tunnel'n. diody v vychisl. i izmerit. tekhn. (Tunnel Diodes in Computer and Measurement Technology -- collection of works), Riga, "Zinatne", 1972, pp 287-294 (from RZh-Radiotekhnika, No 11, Nov 72, Abstract No 11 A231)

Translation: The authors study a high-speed thyratron operating at 300 Mc. The given thyratron is used in a nanosecond measuring device of time intervals equal to or less than 3 nanoseconds. Methodology is described along with the results of threshold testing the thyratron which was assembled from diodes with charge accumulation and tunnel diodes. Results are given from the analysis of the thyratron circuit using the method of experiment planning. Original article: four illustrations, two tables, and three bibliographic entries. Resume.

1/1

APPROVED FOR RELEASE: 09/17/2001 CIA-RDP86-00513R002202430005-3"

"APPROVED FOR RELEASE: 09/17/2001 CIA-RDP86-00513R002202430005-3

USSR

UDC 621.317.755.029.4

DOBRONRAVOV, O. E., PAVLOVA, G. YA., and POCHTAREV, V. L.

"Wide-Band Strobe Unit for Low-Frequency Oscillographs"

V sb. Tunnel'n. diody v vychisl. i izmerit. tekhn. (Tunnel Diodes in Computer and Measurement Technology — collection of works), Riga, "Zinatne", 1972, pp 281-285 (from RZh-Radiotekhnika, No 11, Nov 72, Abstract No 11 A259)

Translation: The authors study a strobe unit which has a transient process stabilization time of 0.35 nanoseconds and with external synchronization. The strobe circuit uses semiconductor triodes in an avalanche regime and semiconductor diodes with charge accumulation. A particularity of the given strobe unit is the fact that its wide-band capacity is achieved by using a mixing chamber. The conducted study and experimental evaluation of the amplitude-frequency characteristic of the strobe unit with a mixing chamber show that it has a uniform frequency-amplitude characteristic up to 900 Mc. Original article: four illustrations and one bibliographic entry. Resume.

1/1

APPROVED FOR RELEASE: 09/17/2001 CIA-RDP86-00513R002202430005-3"

"APPROVED FOR RELEASE: 09/17/2001 CIA-RDP86-00513R002202430005-3

USSR

UDC 621.81.539.431

POCHTENNYY, Ye. K. and BABITSKIY, M. S., Candidates of Technical Sciences, and GURSKIY, V. A., Engineer

"Statistical Estimate of Cyclical Strength at Stress Above the Yield Point"

Moscow, Vestnik Mashinostroyeniya, No 7, June 1972, pp 17-20

Abstract: Loads acting upon machine parts under operating conditions bring about stress in the part material in one of the following ranges: a) prior to the cyclical yield point, the stresses fail to bring about even local fatigue damage of the parts; b) stress action within the range between the cyclical yield point and the endurance limit brings about local fatigue damage, but does not cause destruction of the parts; c) with stress action within the range between the endurance limit and the breaking point, damage of the parts is completed by destruction.

1/1

APPROVED FOR RELEASE: 09/17/2001 CIA-RDP86-00513R002202430005-3"

"APPROVED FOR RELEASE: 09/17/2001 CIA-RDP86-00513R002202430005-3

USSR

UDC 681.142.334(049.1)

STEPANOV, A. YE., PASHKO, D. I., SHAYKEVICH, V. D., and POCHTMAN, YU. M.

Kvazianalogovyye Metody Modelirovaniya Krayevykh Zadach Dlya Differentsial'nykh Uravneniy v Chastnykh Proizvodnykh (Quasi-Analog Methods of Boundary Value Problem Simulation for Partial Differential Equations, Kiev, "Naukova Dumka," 1973, 174 pp

Abstract: The mooograph contains original results of research in the area of developing and using specialized quasi-analog simulation machines to solve applied problems of mathematical physics described by partial differential equations. In particular, methods of simulating two-dimensional problems in the applied theory of elasticity and non-equilibrium problems of thermal conductivity and underground hydraulics are described, as well as the principles of constructing specialized quasi-analog, mathematical machines for solving these equations.

The book is intended for scientific workers, engineers, graduate students, and students interested in electronic simulation and its theory.

1/6

APPROVED FOR RELEASE: 09/17/2001 CIA-RDP86-00513R002202430005-3"

"APPROVED FOR RELEASE: 09/17/2001 CIA-RDP86-00513R002202430005-3

USSR

STEPANOV, A. YE., et al., Quasi-Analog Methods of Boundary Value Problem Simulation for Partial Differential Equations, Kiev, "Naukova Dumka," 1973, 174 pp

CONTENTS

	Page
Foreword	3
FIRST PART	
Chapter I. Brief Reports on the Theory of Quasi-Analog Simulation	
Section 1. Basic Concepts and Definitions	5
Section 2. Simulating Individual Mathematical Operations	6
Section 3. Basis of Design of a Constant Structure Model	12
Section 4. Principles of Design of a Variable Structure Model	19
Section 5. Mathematical Models of Algebraic Equations	24
Chapter II. Quasi-Analog Integrators of Constant Structure	
Section 1. Introductory Notes	31
Section 2. δ-Analog Integrator for a Biharmonic Problem	34
Section 3. δ-Analog Integrator for a Plane Problem in the Theory of Elasticity	44

2/6

APPROVED FOR RELEASE: 09/17/2001 CIA-RDP86-00513R002202430005-3"

"APPROVED FOR RELEASE: 09/17/2001 CIA-RDP86-00513R002202430005-3

USSR

STEPANOV, A. YE., et al., Quasi-Analog Methods of Boundary Value Problem Simulation for Partial Differential Equations, Kiev, "Naukova Dumka," 1973,174 pp

Section 4. σ-Analog Integrator for an Equation in a Plane Problem of the Theory of Elasticity 47

Section 5. An Integrator with Quasi-Negative Resistances for a Plane Problem in the Theory of Elasticity 51

Section 6. An Electronic Integrator for a Problem of Non-Equilibrium Thermal Conductivity 55

Chapter III. Variable Structure Integrators

Section 1. The Principles of Integrator Design 57

Section 2. The Design of Circuits with Multi-Channel Analog Memory 62

Section 3. Semi-Conductor Switch Circuits 65

Section 4. An Analog Memory with Autorestoration of Voltage 70

Section 5. An Automatic Apparatus for Establishing Structural States 73

Section 6. Automating the Input of Initial Data 77

Section 7. Measuring Voltage and Current 81

Section 8. Characteristics of Realization of Boundary Conditions 84

Section 9. Some General Questions of Integrator Design 87

Section 10. Integrators for Simulating Equations to Describe Non-Equilibrium Processes 92

3/6

APPROVED FOR RELEASE: 09/17/2001 CIA-RDP86-00513R002202430005-3"

"APPROVED FOR RELEASE: 09/17/2001 CIA-RDP86-00513R002202430005-3

USSR

STEPANOV, A. YE., et al., Quasi-Analog Methods of Boundary Value Problem Simulation for Partial Differential Equations, Kiev, "Naukova Dumka," 1973, 174 pp

Section 11. Integrators for Simulating Nonlinear Equations 96
Section 12. A Laboratory Model of the Integrator 97
Section 13. Solving Problems on the Integrator 103

SECOND PART

Chapter IV. The Bending of Plates
Section 1. Differential Equations of Plate Bending. Network Method. Rod and Electrical Models. The Design of Plates Whose Description is Approximated by Rectangular Grids 114
Section 2. Plates Whose Description is Approximated by Triangular Grids 120
Section 3. On the Design of Symmetrical Plates 123
Section 4. Circular, Annular and Sector Plates 125
Section 5. The Design of Plates with Supplementary Intra-Contour Links 130
Section 6. The Linear Law of Change in Rigidity 133
Section 7. The Nonlinear Law of Change in Rigidity 138

4/6

APPROVED FOR RELEASE: 09/17/2001 CIA-RDP86-00513R002202430005-3"

"APPROVED FOR RELEASE: 09/17/2001 CIA-RDP86-00513R002202430005-3

USSR

STEPANOV, A. YE., et al., Quasi-Analog Methods of Boundary Value Problem Simulation for Partial Differential Equations, Kiev,"Naukova Dumka," 1973, 174 pp

Chapter V. Some Problems of Plate Stability and Oscillation

Section 1. Basic Equations and Analogies. Rod and Electrical Models. The Stability of Uniformly Compressed Plates 142

Section 2. A Method of Solving the Plate Stability Problem Using Quasi-Analog Models 147

Section 3. The Stability of Symmetrical Plates 150

Section 4. The Stability of Rectangular Plates Compressed in One Direction 152

Section 5. The Stability of Three-Layer Plates 153

Section 6. Determining the Natural Oscillation Frequency of Freely Suspended Plates by Electrical Simulation. Basic Equations and Analogies. The Oscillation of Plates Whose Description is Approximated by Rectangular Grids 154

Section 7. Determining the Natural Oscillating Frequency of Triangular, Beveled, and Trapezoidal Plates 157

5/6

APPROVED FOR RELEASE: 09/17/2001 CIA-RDP86-00513R002202430005-3"

"APPROVED FOR RELEASE: 09/17/2001 CIA-RDP86-00513R002202430005-3

USSR

STEPANOV, A. YE., et al., Quasi-Analog Methods of Boundary Value Problem Simulation for Partial Differential Equations, Kiev, "Naukova Dumka," 1973, 174 pp

Section 8.	The Oscillations of Circular, Annular and Sector Plates	159
Section 9.	Determining the Oscillating Frequency of Plates with Openings (Doubly Connected and Multiply Connected Plates)	161
Section 10.	The Oscillations of Three-Layer Plates with Light Fillers	162
Section 11.	Determining the Natural Oscillating Frequency of Isotropic Plates Lying on an Elastic Base	165
Section 12.	Some Problems in Designing Shells by the Electrical Simulation Method	167
Bibliography		169

6/6

APPROVED FOR RELEASE: 09/17/2001 CIA-RDP86-00513R002202430005-3"

"APPROVED FOR RELEASE: 09/17/2001 CIA-RDP86-00513R002202430005-3

USSR

UDC 624.074.4:681.3

POCHTMAN, YU. M. and FILATOV, G. V., Dnepropetrovsk Construction Engineering Institute

"Optimization of the Parameters of Reinforced Cylindrical Shells by the Method of Random Search"

Kiev, Prikladnaya Mekhanika, Vol 9, No 5, May 1973, pp 33-43

Abstract: The paper deals with the synthesis of cylindrical shells, optimal with respect to volume, made of an ideally elastoplastic material, that are reinforced by stringers and ribs, during the combined action of axial compression and internal pressure. The discrete position of the ribs is taken into account. The thickness of the shell is subjected to variation, as are also the dimensions and the quantity of the stringers and ribs. The problem is formulated as a problem of partial nonlinear integer programming, in which the target function is the weight minimum of the shell, and the limitations are the conditions of strength and stability, and geometric restrictions with respect to dimensions. Optimization is conducted by the method of random search by means of an electronic digital computer. The exposition is illustrated by a numerical example. The research conducted in this paper for a series of reinforced shells confirms the supposition that account must be taken of special

1/2

APPROVED FOR RELEASE: 09/17/2001 CIA-RDP86-00513R002202430005-3"

"APPROVED FOR RELEASE: 09/17/2001 CIA-RDP86-00513R002202430005-3

USSR

POCHTMAN, YU. M. and FILATOV, G. V., Prikladnaya Mekhanika, Vol 9, No 5, May 1973, pp 38-43

cases of the stability loss of shells with discrete placement of the reinforcement, without restriction of the consideration to a shell that is structurally orthotropic, with account taken only of the general case of buckling. 1 table. 9 references.

2/2

APPROVED FOR RELEASE: 09/17/2001 CIA-RDP86-00513R002202430005-3"

"APPROVED FOR RELEASE: 09/17/2001 CIA-RDP86-00513R002202430005-3

USSR

UDC: 624.074.4:681.3

POCHTMAN, Yu. M., FILATOV, G. V., Dnepropetrovsk

"Design of Ribbed Plates of Minimum Weight Under Axial Compression by the Method of Random Search"

Kiev, Prikladnaya Mekhanika, Vol. 8, No. 1, 1972, pp 49-55

Abstract: Problems of selection of the optimal parameters of reinforced plates are studied (thickness of plates and ribs, distance between ribs, height of ribs) providing for minimum weight under axial compression. The discrete placement of the ribs is considered, as well as certain geometric limitations on dimensions. Some of the variable parameters indicated take on integer values only. The problem is formulated as a problem in nonlinear programming, where the goal function is the minimum weight of the plate, the limitations are the conditions of strength and stability. The mathematical apparatus used for computerized study is the method of random search (synthesis of an algorithm for coordinate-by-coordinate self-teaching with a local search algorithm). Numerical examples are presented.

1/1

APPROVED FOR RELEASE: 09/17/2001 CIA-RDP86-00513R002202430005-3"

"APPROVED FOR RELEASE: 09/17/2001 CIA-RDP86-00513R002202430005-3

USSR

UDC 62[illegible].10

POCHTMAN, Yu. M., Candidate of Technical Sciences, Associate Professor

"To the Problem of the Selection of the Optimum Form of Sections by Unsymmetrical Bending"
(Article presented by Candidate of Technical Sciences V. J. Shaykevich, Associate Professor of Dnepropetrovsk Construction Engineering Institute)

Moscow, IVUZ, Mashinostroyeniye, No 2, 1972, pp 9—11

Abstract : The problem of the selection of optimum parameters of sections by unsymmetrical bending is laid down as a problem of non-linear programming where the cross-sectional area is the purposeful function and the conditions of strength and stability are the limitations. In the capacity of mathematical investigation apparatus is applied one of the up-to-date optimization methods, the method of random search, oriented for the use of an electronic digital computer, with a director cone the algorithm of which is

1/2

APPROVED FOR RELEASE: 09/17/2001 CIA-RDP86-00513R002202430005-3"

"APPROVED FOR RELEASE: 09/17/2001 CIA-RDP86-00513R002202430005-3

- USSR

POCHTMAN, Yu. M., IVUZ, Mashinostroyeniye, No 2, 1972, pp 9-11

constructed on the basis of the algorithm of self-instruction. The principle of the method which consists in artificial establishment of probability models for the investigation of determinate problems is explained and illustrated on a numerical example. The suggested method can be applied successfully for selecting optimal sections of any form and for any case of complex resistance. One table, ten formulas, four biblio. refs.

2/2

APPROVED FOR RELEASE: 09/17/2001 CIA-RDP86-00513R002202430005-3"

"APPROVED FOR RELEASE: 09/17/2001 CIA-RDP86-00513R002202430005-3

USSR

"Careful: Paramedicine!"

PODACHIN, V., Dr. Med. Sci., Alma-Ata, Kazakhstanskaya Pravda, 10 Aug 73, p 4

Translation: The materialistic scientific outlook cannot condone so-called occultism -- reactionary mystical teachings about "mysterious forces" of nature, "undetectable" properties of matter, and so on. Science has to struggle with medical occultism which has also been termed paramedicine; the Greek prefix para (besides, alongside) itself underlines its detachment from authentic scientific medicine.

Paramedicine encompasses a wide spectrum of phenomena: from out-and-out quackery to the seemingly most modern and progressive theories which, in fact, are without any scientific basis. Paramedicine has flowered exuberantly abroad, and certain aspects of it are also evident in our country, i.e., homeopathy, yoga, and acupunture, among others. Frequently paramedicine involves archaic concepts of seers, especially gifted people, and chosen individuals who have access to "secrets" of nature. The most dangerous forms of medical occultism are those which assume a pseudoscientific outlook and attract wide sections of the population which has no medical training. For example, recently an article appeared in Sovetskaya Adzharia by the correspondent S. Shul'ts of the GruzINFORM (Georgian information service) about a resident

1/7

APPROVED FOR RELEASE: 09/17/2001 CIA-RDP86-00513R002202430005-3"

"APPROVED FOR RELEASE: 09/17/2001 CIA-RDP86-00513R002202430005-3

USSR

PODACHIN, V., Alma-Ata, Kazakhstanskaya Pravda, 10 Aug 73, p 4

of Tbilisi, a certain A. Krivorotov, who allegedly with a single application of his hands cures many diseases. The author of this sensational communication further states that local scientists, having examined this "magician," discovered some sort of new "biological property of the organism."

How can we explain the existence and dissemination of dubious medical information in our country? Apparently it can be ascribed to the fact that individual representatives of the intelligentsia in their attempts not to fall behind the progress of science carefully search out everything that is "new;" however, because of their limited sphere of specialized knowledge they cannot distinguish between what is truly progressive and the pseudoscientific lures of the para- or pseudophysicians. Imperfections in medicine itself provide nutrients for paramedicine. The great achievements of medicine during the last century have created among a proportion of the population a feeling that medicine is all-powerful. Ye. M. Tareyev, Academician of the USSR Academy of Medical Sciences, has correctly pointed out that some people demand from the physician absolute restoration of health in all cases, insisting that with "advances in science" it is possible to cure practically every disease. When this is impossible, then this patient with a chronic incurable disease runs to the homeopath, acupuncture practitioner, or someone else and is ready to swallow any medicine and accept any method if it only offers a glimmer of

2/7

APPROVED FOR RELEASE: 09/17/2001 CIA-RDP86-00513R002202430005-3"

"APPROVED FOR RELEASE: 09/17/2001 CIA-RDP86-00513R002202430005-3

USSR

PODACHIN, V. , Alma-Ata, Kazakhstanskaya Pravda, 10 Aug 73, p 4

recovery. Physicians themselves sometimes contribute to the existence of occultism. They do not always give careful consideration to their manipulations and fail to take into account the diligence with which a patient follows their every move. For instance, in performing a skin test a physician makes a cross on the patient's skin and is not even aware of the fantastic conclusion that the patient reaches: my state of health is so bad that the physician has already put a grave marker over me!

We must not forget to mention the psychopaths, paranoiacs, and schizophrenics who are especially susceptible to occult practices. We all know that one mentally ill patient can influence 1000 healthy persons; however, it is hardly possible for 1000 healthy individuals to influence one mentally disturbed subject.

The paraphysicians are also assisted by, unfortunately, inadequate and methodologically ignorant popularization of medical knowledge, which provides an erroneous impression of the simplistic structure of the organism and the ease with which disease can be understood.

In one way or another paramedicine shows its vitality and assumes the trappings of authentic science. When they affect a deep understanding of the causes and nature of disease paraphysicians tend to invoke various forms of radiation, solar ethers, and earthy emanations and radiations. According to

3/7

APPROVED FOR RELEASE: 09/17/2001 CIA-RDP86-00513R002202430005-3"

"APPROVED FOR RELEASE: 09/17/2001 CIA-RDP86-00513R002202430005-3

USSR

PODACHIN, V., Alma-Ata, Kazakhstanskaya Pravda, 10 Aug 73, p 4

them, the human organism attracts ethers and they hand around like a layer. Disease takes over when this ability to attract the ethers is disturbed and its diameter decreases. We shall later go into special so-called "geopathic zones" where there is a cause for a number of diseases.

A collection of articles by foreign scientists under the title of Medical Occultism (Moscow, 1971) enumerates the antiscientific influence exercised by paraphysicians, documented by a large body of facts. One of the paraphysicians states the "every drop of rain in the country contains radium gamma radiations which lead to sarcomas or carcinomas." Another holds that disease is primarily due to arsenic radiation, and that this leads mainly to heart disease. Many of the radiation-prone cultists also invoke an "aura" -- rays from the human body which in some cases are ascribed protective effects, and in other harmful consequences. And what are the views of a paraphysician that holds that our bodily radiation can accumulate and prevent recuperation? He tells us that "severe cases of multiple sclerosis, poliomyelitis, cirrhosis of liver, leukemia, glaucoma, cancer, sarcomas and other diseases which were previously considered incurable require, in addition to everything else, constant elimination of all pathogenic causes and this includes, first of all, such well known material as bed linen. All biological materials (algae, horse hairs, cotton, wool, feathers) are subject to earthly rays and those

4/7

APPROVED FOR RELEASE: 09/17/2001 CIA-RDP86-00513R002202430005-3"

"APPROVED FOR RELEASE: 09/17/2001 CIA-RDP86-00513R002202430005-3

USSR

PODACHIN, V. , Alma-Ata, Kazakhstanskaya Pravda, 10 Aug 73, p 4

coming from the patient himself... Consequently, bed linen for the patient should be made out of materials which do not take up radiation."

The paraphysicians "support" the view of scientific medicine that emotional upheavals are important in the development of many diseases. But here is how they explain this role: under the influence of emotional stress, disease causing gases, you see, liquify and initially become jelly-like masses that transform into tumors. "Nervousness is the first step in calcification and depositing of uric acid crystals in blood vessels. Syphylis, meningitis, influenza and scrofula result from smallpox vaccination; cancer is an eroded form of scabies, and diphtheria is an attempt by nature to eliminate the smallpox poison from the body." And all of this nonsense is masked by long references to achievements of the exact sciences.

Going into fantastic reasons for diseases, the paraphysicians present their methods of diagnosis. One of their "discoveries" is the determination of disease from the iris of the eye since each segment, they hold, corresponds to a specific organ. What is this if not a twisted and misstated version of authentic phenomena? It is known that in a number of diseases the iris indeed undergoes changes. However, the paraphysicians attempt to "see a disease" from a healthy iris. The West German scientist Schreck has sharply ridiculed

5/ 7

APPROVED FOR RELEASE: 09/17/2001 CIA-RDP86-00513R002202430005-3"

"APPROVED FOR RELEASE: 09/17/2001 CIA-RDP86-00513R002202430005-3

USSR

PODACHIN, V., Alma-Ata, Kazakhstanskaya Pravda, 10 Aug 73, p 4

"this unique paradox, which is grotesque and absurd, in which people try to determine illness from healthy tissues."

In order to hide their antiscientific views, the followers of occult medicine resort to verbal equilibristics. They write about "biological infrared diagnosis," discuss some sort of "many faceted problem of technical measuring in research on ultramechanical radiating processes," and so on. There is no need to prove that all of this is completely lacking in arguments and facts.

The principle of similitude has become very popular in occult medicine: Heart extracts are used against heartdisease, brain extracts against brain disease, and so on. The principle of similitude has long been employed by the homeopaths, and their prescriptions are largely based on an unscientific notion of "sympathy." All this means is that the external appearance of an object determines its therapeutic value: crabs against cancer, eagle feathers for improving visual acuity, red beads for erysipelas, and so on.

A common phenomenon shared by all occult methods is that they claim to obtain results and yet are completely unrelated to the cause-and-effect principle. Here is a typical paramedical prescription: take nine eggs daily that have been incubated, for nine days, followed by a nine day abstention period, and repeat again.

6/7

APPROVED FOR RELEASE: 09/17/2001 CIA-RDP86-00513R002202430005-3"

"APPROVED FOR RELEASE: 09/17/2001 CIA-RDP86-00513R002202430005-3

USSR

PODACHIN, V., Alma-Ata, Kazakhstanskaya Pravda, 10 Aug 73, p 4

A special place must be reserved for yoga among the various occult practices. Since it has existed for ages this suggests to people that it has some sort of a scientific basis. In fact, yoga represents a multitude of religions which were dying out and attempted to generate psychic activity through bodily acrobatics and create an apathetic "spiritual harmony." In order to become, so to say, founder of the Jesuits, Ignacius Loyola also paid a great deal of attention to external pose and breathing.

Similar to yoga there is the unproved telepathic transmission of information over distances from one person to another on the basis of their neuro-psychic states.

All of the varieties of paramedicine eventually collide with the materialistic nature of various phenomena. It is true that in recent years paramedicine has tried to get out of the realm of mysticism and coover itself with a cloak of respectability as an accepted science. But its basic nature does not change. It only becomes more dangerous because it changes its methods and employs "scientific expressions," and gives the appearance of striving toward progress.

The fight against medical occultism and its questionable "sensations" is very real indeed, and cannot be conducted without effective propaganda of authemtic scientific knowledge.

7/7

APPROVED FOR RELEASE: 09/17/2001 CIA-RDP86-00513R002202430005-3"

"APPROVED FOR RELEASE: 09/17/2001 CIA-RDP86-00513R002202430005-3

USSR

UDC 591

GEZALYAN, L. S., and PODACHIN, V. P., Radiobiology Sector, Ministry of Health, Armenian SSR, and Institute of Higher Nervous Activity and Neurophysiology, Academy of Sciences USSR

"Effect of Ionizing Radiation on Evoked Bioelectric Activity of the Rat Brain"

Yerevan, Biologicheskiy Zhurnal Armenii, Vol 23, No 7, 1970, pp 32-39

Abstract: Rats were subjected to whole-body irradiation (300, 550, and 700 r), and changes in evoked potential were recorded at regular intervals up to 3 weeks after irradiation by means of microelectrodes implanted in neurons of the cuneate nucleus of the medulla oblongata, specific nuclei of the thalamus, and the cerebellar cortex. No significant impairment of evoked bioelectric activity was observed after the first week. Beginning with the second week, the latent period of the responses steadily increased. As elapsed time after exposure increased, the amplitude of the evoked potential decreased more rapidly and the changes in all parameters and configurations became more pronounced. The increase in the latent period of the evoked potential and the decrease in the amplitude are regarded as direct evidence of inhibition of the nuclei.

1/1

APPROVED FOR RELEASE: 09/17/2001 CIA-RDP86-00513R002202430005-3"

"APPROVED FOR RELEASE: 09/17/2001 CIA-RDP86-00513R002202430005-3

USSR

UDC: 541.13

MARKOV, B.F., and PODAFA, B.P., Institute of General and Inorganic Chemistry imeni N.S. Kurnakov, Moscow, Academy of Sciences USSR

"Equilibrium Between Metallic Titanium and its Chlorides in a Medium of Molten Cesium Chloride"

Kiev, Ukrainskiy Khimicheskiy Zhurnal, Vol 36, No 1, Jan 70, pp 20-22

Abstract: Equilibrium potentials of titanium and redox potentials of the system Ti^{2+}/Ti^{3+} were determined in a medium of molten cesium chloride at 700°. The apparent standard potential of the system titanium-titanium dichloride was found to be -1.981±0.004 v relative to chlorine reference electrode. The formal redox potential $E^{o'}_{Ti^{2+}/Ti^{3+}}$ was -1.997±0.009 v relative to the reference electrode. Analysis of experimental data led the authors to a conclusion that the equilibrium of the reaction $2TiCl_3$ (molten) + Ti(solid) $\rightleftharpoons 3TiCl_2$ in a medium of molten alkalimetal chlorides shifts towards the trichloride as one goes from sodium to potassium to cesium, which is due to a stronger complex formation trend of the trichloride.

1/1

APPROVED FOR RELEASE: 09/17/2001 CIA-RDP86-00513R002202430005-3"

"APPROVED FOR RELEASE: 09/17/2001 CIA-RDP86-00513R002202430005-3

1/2 021 UNCLASSIFIED PROCESSING DATE--13SEP70

TITLE--EQUILIBRIUM BETWEEN METALLIC TITANIUM AND ITS CHLORIDES IN A MEDIUM OF MOLTEN CESIUM CHLORIDE -U-

AUTHOR--MARKOV, B.F., PODAFA, B.P.

P

COUNTRY OF INFO--USSR

SOURCE--UKR. KHIM. ZH. 1970, 36(1) 20-2

DATE PUBLISHED--------70

SUBJECT AREAS--MATERIALS

TOPIC TAGS--CORUNDUM, SILVER CHLORIDE, TITANIUM CHLORIDE, POTASSIUM CHLORIDE, SODIUM CHLORIDE, METAL ELECTRODE, CHEMICAL EQUILIBRIUM, TITANIUM, CESIUM CHLORIDE

CONTROL MARKING--NO RESTRICTIONS

DOCUMENT CLASS--UNCLASSIFIED

PROXY REEL/FRAME--1989/1324 STEP NO--UR/0073/70/036/001/0020/0022

CIRC ACCESSION NO--AP0107797

ZZZZZZZZZZZZ UNCLASSIFIED

APPROVED FOR RELEASE: 09/17/2001 CIA-RDP86-00513R002202430005-3"

"APPROVED FOR RELEASE: 09/17/2001 CIA-RDP86-00513R002202430005-3

2/2 021 UNCLASSIFIED PROCESSING DATE--11SEP70

CIRC ACCESSION NO--AP0107797

ABSTRACT/EXTRACT--(U) CP-O- ABSTRACT. THE CELL (MINUS) TI TICL SUB2-TICL SUB3 MIXT. IN CSCL PARALLEL TO CORUNDUM DIAPHRAGM PARALLEL TO AGCL IN 1:1 (MOLE) NACL-KCL MIXT. AGTI (PLUS) AT 700DEGREES WAS CONSTRUCTED AND THE CONCN. OF TICL SUB2 DETD. FROM THE AMT. OF CURRENT USED IN THE ANODIC DISSOLN. OF THE TI ELECTRODE. MEASUREMENTS OF P.D. AT VARIOUS TI PRIME2 POSITIVE CONCNS. AGREED WITH THE NERNST RELATION, STANDARD POTENTIAL EQUALS 1.981 PLUS OR MINUS 0.004 V RELATIVE TO A CL REF. ELECTRODE. FOR THE CELL (MINUS)MO-TICL SUB2-TICL SUB3 MIXT. IN CSCL PARALLEL TO CORUNDUM DIAPHRAGM PARALLEL TO AGCL IN 1:1 (MOLE) NACL-KCL MIXT.- AG-MO (POSITIVE), EMG. MEASUREMENTS WERE USED TO OBTAIN A HALF CELL POTENTIAL OF MINUS 1.997 PLUS OR MINUS 0.009 FOR TI PRIME2 POSITIVE-TI PRIME3 POSITIVE AT 700DEGREES IN CSCL. COMPARISON WITH THE RESULTS IN NACL AND KCL SOLN. INDICATES A LARGER CONCN. OF TICL SUB3 IN CSCL. THIS IS ATTRIBUTED TO THE GREATER STABILITY OF TICL SUB6 PRIME3 NEGATIVE OVER THAT OF TICL SUB4 PRIME2 NEGATIVE.

ZZZZZZZZZZZZ

UNCLASSIFIED

APPROVED FOR RELEASE: 09/17/2001 CIA-RDP86-00513R002202430005-3"

"APPROVED FOR RELEASE: 09/17/2001 CIA-RDP86-00513R002202430005-3

USSR

UDC 621.394.74

TUMANOVSKIY, YE.I., ABUGOV, A.G., GORODETSKIY, V.I., FEDAKOV, A.S.

"Status And Prospects For Development Of Automatic Telegraph Switching Technics"

Sb. nauch. tr. Kiyev. fil. TsNII svyazi (Collection Of Works Of The Kiev Branch Of The Central Scientific-Research Institute Of Communications), 1970, Issue 6, pp 10-15 (from RZh--Elektrosvyaz', No 6, June 1971, Abstract No 6.(4.249)

Translation: The characteristics are presented of register stations for telegraph exchange networks and direct connections. The principal operation-technical characteristics and the principles of construction of the prospective electronic system of switching telegraph channels are considered. Summary.

1/1

APPROVED FOR RELEASE: 09/17/2001 CIA-RDP86-00513R002202430005-3"

"APPROVED FOR RELEASE: 09/17/2001 CIA-RDP86-00513R002202430005-3

USSR

UDC 628.165.04

SOBOLEV, Y. A., RYUCHIN, S. V., GOLUB, S. I., and PODBEREZNYY, V. L.

"Ten-Unit Experimental Industrial Desalination Apparatus"

Moscow, Vodosnabzheniye i Sanitarnaya Tekhnika, No 7, 1973, pp 30-32

Abstract: For the first time on a world-wide scale a 10 unit desalination apparatus has been built and successfully operated. This complex is based on the principle of evaporation with seeding; it consists of evaporation units with forced circulation of the brine. The average productivity of such units is 640-650 m^3/hr. The distillate obtained is suitable for the use as drinking water as well as for feeding high pressure boilers.

1/1

APPROVED FOR RELEASE: 09/17/2001 CIA-RDP86-00513R002202430005-3"

"APPROVED FOR RELEASE: 09/17/2001 CIA-RDP86-00513R002202430005-3

USSR

UDC 628.165

PODBEREZNYY, V. L., and ROZEN, A. M., Sverdlovsk-Moscow

"Technical-Economical Comparison of the Systems of Salt Water Distillation Equipment With Hydrophobic Heat Carrier"

Moscow, Vodosnabzheniye i Sanitarnaya Tekhnika, No 2, 1972, pp 1-4

Abstract: Analysis of four systems for desalination of sea water has been carried out using equipment based on a hydrophobic heat carrier. Basically three types of operations are involved: multistage equipment based on the principle of "repeated vapor heating", multistage equipment with recirculating flow of the hydrophobic heat carrier, and single stage apparatus. Performance of the following systems was analyzed: repeated vapor heating, evaporation equipment with contact heating and parallel feeding, counter-current contact evaporation, and direct flow contact evaporation. On the basis of technical-economical analysis of the performance a conclusion was reached that the most efficient is the system of direct flow contact evaporation. Heat consumption is by far the least, and the utilization of metallic heat exchange surface and of the construction material is most economical. These advantages outweigh and compensate for somewhat greater use of electric power, sea water, and losses of the hydrophobic carrier.

1/1

APPROVED FOR RELEASE: 09/17/2001 CIA-RDP86-00513R002202430005-3"

"APPROVED FOR RELEASE: 09/17/2001 CIA-RDP86-00513R002202430005-3

USSR UDC 66.048.003.1

PODBEREZNYY, V. L., and ROZEN, A. M.

"Technical-Economic Comparison of Salt Water Distillation Equipment of the Common Type and With Hydrophobic Heat Carrier"

Moscow, Vodosnabzheniye i Sanitarnaya Tekhnika, No 6, 1971, pp 1-4

Abstract: Distillation equipment for desalination of sea water equipped with a hydrophobic heat carrier is comparable in efficiency with common distillation equipment. The cost of the production of distillate using this equipment, with the temperature differences at the end of the heat exchange process being about 2° — which is quite practical at the current state of art -- is by some 40-50% lower than the cost of producing it by common distillation. The principle of the operation of hydrophobic heat carrier apparatus is described. The difference in the cost is due to much lower expenditure for repairs and devaluation of the equipment. The most crucial disadvantage is the excessive consumption of electric energy caused by the need for relocation of heat carrier from one condensation chamber to another, and the necessity to pulverize it to develop contact surface.

1/1

APPROVED FOR RELEASE: 09/17/2001 CIA-RDP86-00513R002202430005-3"

"APPROVED FOR RELEASE: 09/17/2001 CIA-RDP86-00513R002202430005-3

USSR

UDC 542.48

PODBEREZHNYY, V. L., ROZEN, A. M., and SIYANKO, K. S.

"Desalination of Sea Water by Means of a Hydrophobic Heat Carrier"

Moscow, Vodosnabzheniye i Sanitarnaya Tekhnika, No 6, 1971, pp 8-13

Abstract: The essence of the desalination process based on hydrophobic heat carriers, in contrast to common distillation equipment, is that metallic heat conductors are replaced by the surface of a movable heat carrier immiscible with water. This makes it possible to carry out all heat exchange processes in direct contact of two phases: water-heat carrier and vapor-heat carrier, simplifying the apparatus, lowering the maintenance problems. In this study laboratory experiments have been utilized to show a feasibility of using simple components for water desalination: triple liquid exchanger, a condenser for mixing and an evaporation chamber. It has been shown that such a system works, and for the conditions studied shows good indicators. The need has been pointed out for developing equipment and finding conditions for industrial application of this process.

1/1

APPROVED FOR RELEASE: 09/17/2001 CIA-RDP86-00513R002202430005-3"

"APPROVED FOR RELEASE: 09/17/2001 CIA-RDP86-00513R002202430005-3

USSR

UDC 615.324:595.421:615.281

PODBOROKOV, V. M., STEPANCHONOK-RUDNIK, G. I., and GONCHAROVSKAYA, I. M., Laboratory of Transmitters, Division of Infections With Natural Foci, Institute of Epidemiology and Microbiology imeni N. F. Gamaleya, Academy of Medical Sciences USSR, Moscow

"Antibacterial Activity of the Organs and Tissues of Ixodoidea Ticks. II."

Moscow, Meditsinskaya Parazitologiya i Parazitarnyye Bolezni, Vol 41, No 5, Sep/Oct 72, pp 577-581

Abstract: It was established that the hemolymph and intestinal contents of hungry and engorged blood-sucking ticks Alveonasus lahorensis exerted a strong bactericidal action on Streptococcus pyogenes, Corynebacterium diphtherine, and Neisseria meningitidis. The antibacterial action of the intestinal wall and of tissue homogenates (those of the tracheal complex, muscles, and nerve ganglion) of the ticks on these microorganisms was weak. The contents of the intestine of hungry ticks had a weak bactericidal activity towards Erysipelothrix insidiosa. The intestinal contents of hungry ticks generally exerted a stronger antibacterial action than those of engorged ticks. The hemolymph, intestinal contents, intestinal wall, and homogenates of the tracheal complex, muscles, and nerve ganglion did not exhibit an antibacterial activity towards

1/2

APPROVED FOR RELEASE: 09/17/2001 CIA-RDP86-00513R002202430005-3"

"APPROVED FOR RELEASE: 09/17/2001 CIA-RDP86-00513R002202430005-3

USSR

PODBORONOV, V. M., et al., Meditsinskaya Parazitologiya i Parazitarnyye Bolezni, Vol 41, No 5, Sep/Oct 72, pp 577-581

Listeria monocytogenes (three strains), Pransicella tularensis, Leischmania tropica minor, Pasteurella pseudotuberculosis, Bacilla subtilis, or Leptospira of the strain Potoc I. The lack of antibacterial activity towards these microorganisms has a bearing on the capacity of the ticks to preserve the pathogenic microorganisms in question in their bodies and to transmit the diseases caused by them.

2/2

APPROVED FOR RELEASE: 09/17/2001 CIA-RDP86-00513R002202430005-3"

"APPROVED FOR RELEASE: 09/17/2001 CIA-RDP86-00513R002202430005-3

Acc. Nr: AP0034399

Ref. Code: UR 0297

PRIMARY SOURCE: Antibiotiki, 1970, Vol 15, Nr 2, pp 136-140

THE EFFECT OF QUINACRINE AND AURANTINE ON THE ORIGINATION AND DEVELOPMENT OF RESISTANCE IN STREPTOCOCCI

I. S. Petropavlovskaya, V. M. [redacted]

Division of Infection Pathology and Experimental Therapy of Infections of the N. F. Gamalei Institute of Epidemiology and Microbiology of the AMS of the USSR, Moscow

Combined use of streptomycin (100 Un/ml) with quinacrine or aurantine produces a much greater reduction of viable staphylococci in the culture medium than does the use of streptomycin alone. An addition of quinacrine (80 γ/ml) or of aurantine (0.05 γ/ml) yields in 24 hours a complete bactericidal effect without development of resistant forms. Combination of penicillin with quinacrine or aurantine exercised bactericidal effect also on the penicillin-resistant staphylococcus obtained through passages on the media with progressively increasing concentration of the antibiotic. The resistance was noted to go down to the sensitivity level of the initial strain under effect of quinacrine and aurantine.

D. A.

REEL/FRAME
19711059

APPROVED FOR RELEASE: 09/17/2001 CIA-RDP86-00513R002202430005-3"

"APPROVED FOR RELEASE: 09/17/2001 CIA-RDP86-00513R002202430005-3

USSR

UDC 547.269.3+541.49

IL'YASHEVICH, I. I., PODCHAYNOVA, V. N., SEREBRYAKOVA, N. V., YEGOROVA, L. G., and TYURENKOVA, G. N., Ural Polytechnical Institute imeni S. M. Kirov

"Synthesis of Complexing Agents. Ethylenediamine-N,N"-di-β-ethanesulfonic-N-methylphosphonic Acid and Its Properties"

Leningrad, Zhurnal Obshchey Khimii, Vol 41 (103), No 4, Apr 71, pp 758-761

Abstract: Ethylenediamine-N,N'-di-β-ethanesulfonic acid was dissolved in water; its pH was brought to 8-9. Chloromethylphosphonic acid was prepared. Both solutions were then combined, kept on water bath until the pH ceased to change, maintaining it at 8-9 during the reaction time. At the completion of the reaction, the solution was cooled, its pH lowered to 1-2 by addition of HCl, the solution was filtered and evaporated. Next it was passed through a KU-1 ion exchange column, evaporated, and the product -- ethylenediamine-N-N'-di-β-ethanesulfonic-N-methylphosphonic acid (I), m.p. 86-87° is precipitated with methanol. It is more basic than ethylenediamine-N,N'-di-β-ethanesulfonic acid, but less basic than ethylenediamine-N,N'-tri-β-ethanesulfonic acid (II). It was shown that presence of the $P(O)(O^-)_2$ group in (I) increases the stability of its complexes with cations, as compared to (II).

1/1

APPROVED FOR RELEASE: 09/17/2001 CIA-RDP86-00513R002202430005-3"

"APPROVED FOR RELEASE: 09/17/2001 CIA-RDP86-00513R002202430005-3

USSR

UDC 538.311.001.24

AFONIN, A. A., PODCHERNYAYEV

"Complex Surface Resistance and Magnetic Characteristics of a Ferromagnetic Core of Rectangular Cross Section"

Kiev, Kibernetika i Vychislitel'naya Tekhnika, Metody Rascheta Elektromagnitnykh Poley na Etsvm, No 11, 1971, pp 128-133

Abstract: A study was made of a ferromagnetic core of rectangular cross section placed in a longitudinal, variable magnetic field. Expressions are presented for determining the complex surface resistance and equivalent magnetic permeability. Good comparison of the calculated and experimental values of these variables is shown, and the relation between the complex surface resistances of ferromagnetic cores of circular and rectangular cross section is established.

The complex surface resistance of ferromagnetic cores of rectangular cross section can be calculated by formulas derived under the assumption of constancy of the magnetic permeability if the equivalent magnetic permeability of the investigated samples is used. The procedure for determining the equivalent magnetic permeability with respect to experimental values of the complex surface resistance of ferromagnetic samples of rectangular cross section is confirmed experimentally. Comparative curves are presented for the experimental and theoretical data.

1/1

APPROVED FOR RELEASE: 09/17/2001 CIA-RDP86-00513R002202430005-3"

"APPROVED FOR RELEASE: 09/17/2001 CIA-RDP86-00513R002202430005-3

PODCHERNYAYEVA, I.A.

(9)

JPRS 61609

29 March 1974

RESEARCH ON MATERIALS FOR THE MANUFACTURE OF OPEN-CYCLE MHD GENERATOR ELECTRODES

[Article by G. V. Samsonov, V. M. Sleptsov, G. G. Gnesin, V. S. [illegible], I. A. Podchernyayeva, Yu. K. Lapshov (Institute of Problems of Hydrology, Academy of Sciences UkrSSR), G. M. Shegolev, Yu. P. Fukota (Institute of Industrial Thermophysics, Academy of Sciences UkrSSR), E. P. Strashinin (Institute of Electrodynamics, Academy of Sciences UkrSSR); Kiev, Issledovaniye Materialov dlya MGDG Otkrytogo Tsikla, Russian, 1971, pp 393-409]

Annotation

Presented in this paper are the results of testing of gas-permeable blown electrodes under model MHD conditions. The tests revealed that the erosion resistance of protected materials is increased by a factor of 80 to 100 while the current density is 2-3 A/cm² (in the distributed discharge mode) and up to 20 A/cm² in the arc mode.

The interaction between air plasma containing compounds of alkali metals as additive, and the surface of electrodes, protected by blowing and without protection, was investigated. The results of tests of electrodes made of nonporous polycrystalline silicon carbide, produced by the reaction sintering method, are presented in this work. The physical properties which govern the operational performance of the electrodes are analyzed. It is established that long-term operation of the electrodes does not result in change of the phase composition and properties of polycrystalline silicon carbide. Erosion and chemical destruction occurs only on the surface of electrodes.

The composition of the film formed on the surface of a silicon carbide electrode during operation in contact with plasma containing potassium additive is analyzed. It is shown that the continuously forming silicate film substantially increases the emissivity of silicon carbide.

The electrode of an MHD generator should satisfy two main requirements: a) resistance to the aggressive action of the plasma jet for a long

[I - USSR - L]

APPROVED FOR RELEASE: 09/17/2001 CIA-RDP86-00513R002202430005-3"