"APPROVED FOR RELEASE: 09/17/2001 CIA-RDP86-00513R002202620003-4

2/2 020 UNCLASSIFIED PROCESSING DATE--09OCT70

CIRC ACCESSION NO--AP0106920

ABSTRACT/EXTRACT--(U) GP-0- ABSTRACT. A BUTADIENE ME METHACRYLATE COPOLYMER CONTG. 0.75PERCENT METHACRYLAMIDE WAS DEVELOPED FOR FINISHING LEATHER. THE LATEX FILMS HAD HIGH THERMAL STABILITY AND LOW SWELLING H IN SUB2 O, WHICH MADE THEM EXCELLENT SUBSTITUTES FOR DMMA-65-1-GP LATEX (PRESENTLY USED FOR FINISHING LEATHER).

UNCLASSIFIED

APPROVED FOR RELEASE: 09/17/2001 CIA-RDP86-00513R002202620003-4"

"APPROVED FOR RELEASE: 09/17/2001 CIA-RDP86-00513R002202620003-4

BERKMAN, N. A. et al., USSR Author's Certificate No 266856

channel; when operating in the interruption analysis mode, the device is connected to a channel through which a measurement frequency signal is transmitted. A. K.

2/2

APPROVED FOR RELEASE: 09/17/2001 CIA-RDP86-00513R002202620003-4"

"APPROVED FOR RELEASE: 09/17/2001 CIA-RDP86-00513R002202620003-4

SPRS 59208
6-73

C

X-4. ALLOYING EPITAXIAL LAYERS OF SILICON BY THE GAS DISCHARGE METHOD IN THE GLOW DISCHARGE MODE

[Article by O. N. Borisov, L. M. Skvortsov, M. I. Rakhlis, R. F. Kurchevskiy, L. I. Gevganova, A. G. Sirotkina, Minsk, Moscow; Novosibirsk, III Simposium po Protsessam Rosta i Sinteza Poluprovodnikovykh Kristallov i Plenok, Russian, 12-17 June 1972, p 131]

An experimental study was made of the possibility of gas discharge alloying of epitaxial layers of silicon under glow discharge conditions between the electrode containing the alloying admixture.

The variation in alloying level by admixture groups V and III was investigated for transmission of H_2Ar and mixtures of the gases through the discharge chamber.

In order to discover the mechanism of the formation of the silicon mixtures, the ion energies of H^+ and Ar^+ and the threshold energies of deposition of the electrodes made of Au-Sb and LaB_6 alloys were calculated. The calculations indicate the different mechanism of formation of alloying mixtures on transmission of H_2 and Ar through the discharge chamber and explain the observed experimental characteristics of alloying.

RAKHLIS, M.I.

APPROVED FOR RELEASE: 09/17/2001 CIA-RDP86-00513R002202620003-4"

"APPROVED FOR RELEASE: 09/17/2001 CIA-RDP86-00513R002202620003-4

1/2 032 UNCLASSIFIED PROCESSING DATE--09OCT70

TITLE--CHANGES IN PLEURAL ABSORBING ABILITY UNDER THE EFFECT OF HIGH FREQUENCY ELECTROMAGNETIC OSCILLATIONS ON THE ORGANISM -U-

AUTHOR-(02)-RAYTELBERGBLANK, V.R., RAKHMAN, F.I.

COUNTRY OF INFO--USSR

R

SOURCE--FIZIOLOGICHNIY ZHURNAL, 1970, VOL 16, NR 3, PP 379-384

DATE PUBLISHED--------70

SUBJECT AREAS--BIOLOGICAL AND MEDICAL SCIENCES

TOPIC TAGS--LUNG, CAT, PHOSPHORUS ISOTOPE, RADIOACTIVE TRACER, ELECTROMAGNETIC BIOLOGIC EFFECT, ULTRASONIC BIOLOGIC EFFECT

CONTROL MARKING--NO RESTRICTIONS

DOCUMENT CLASS--UNCLASSIFIED

PROXY REEL/FRAME--1994/1121 STEP NO--UR/0238/70/016/003/0379/0384

CIRC ACCESSION NO--AP0115140

UNCLASSIFIED

APPROVED FOR RELEASE: 09/17/2001 CIA-RDP86-00513R002202620003-4"

"APPROVED FOR RELEASE: 09/17/2001 CIA-RDP86-00513R002202620003-4

UNCLASSIFIED PROCESSING DATE--09OCT70

2/2 032

CIRC ACCESSION NO--AP0115140

ABSTRACT/EXTRACT--(U) GP-0- ABSTRACT. THE PLEURAL ABSORBING ACTIVITY WAS STUDIED UNDER EFFECT OF ELECTROMAGNETIC FIELDS AND ULTRASOUND OF DIFFERENT POWER AND DURATION IN 123 CATS. ABSORBING FUNCTION OF THE PLEURAL CAVITY WAS STUDIED BY THE METHOD OF RADIOACTIVE INDICATION. RADIOACTIVE PHOSPORUS WAS ADMINISTRATED IN THE INDICATOR DOSAGE 22.5 MU KG. ABSORPTION WAS STUDIED IN DYNAMICS 5, 10, 20, 30, 45 60, 90 AND 120 MIN AFTER ADMINISTRATION OF P PRIME32 TO THE PLEURAL CAVITY. THE INVESTIGATIONS SHOWED, THAT THE DEGREE AND DIRECTION OF THE CHANGES IN THE PLEURAL ABSORBING FUNCTION DEPENDS ON THE POWER AND DURATION OF THE EFFECT OF ELECTROMAGNETIC OSCILLATIONS ON THE ORGANISM AND ON THE PHYSICAL CHARACTERISTICS OF THE AGENT. FACILITY: DEPARTMENT OF PATHOLOGICAL PHYSIOLOGY AGRICULTURAL INSTITUTE, ODESSA.

UNCLASSIFIED

APPROVED FOR RELEASE: 09/17/2001 CIA-RDP86-00513R002202620003-4"

"APPROVED FOR RELEASE: 09/17/2001 CIA-RDP86-00513R002202620003-4

USSR UDC 612.215.5.014.424

FAYTEL'BERG-BLANK, V. R., and RAKHMAN, F. I., Chair of Pathological Physiology, Odessa Agricultural Institute

"Changes in Pleural Absorbing Ability Under the Influence of High-Frequency Electromagnetic Oscillation on the Organism"

Kiev, Fiziolohichnyy Zhurnal, Vol 16, No 3, May/Jun 70, pp 379-384

Abstract: The pleural absorbing activity of 123 dats subjected to varying intensity and duration of electromagnetic fields and ultrasound was studied, using the method of radioactive indication. Radioactive phosphorus was administered into the pleural cavity in a dose of 22.5 micro curie/kg and absorption was determined after periods ranging from 3 to 120 min in blood from an ear vein. The effect of the field, of the microwaves and of the ultrasound was investigated. Also the distribution of P^{32} was determined in liver, kidneys, spleen and lungs. It was shown that shifts in pleural absorbing function depend on the intensity and duration of the electromagnetic oscillations and on the physical characteristics of the agent.

1/1

APPROVED FOR RELEASE: 09/17/2001 CIA-RDP86-00513R002202620003-4"

"APPROVED FOR RELEASE: 09/17/2001 CIA-RDP86-00513R002202620003-4

1/2 021 UNCLASSIFIED PROCESSING DATE--30OCT70

TITLE--EFFECT OF SOME FACTORS ON THE CRYSTALLIZATION OF RUBBERS FROM CIS ISOPRENE RAW RUBBER -U-

AUTHOR-(03)-RAKHMAN, M.Z., KOLYADINA, N.G., VEKSELMAN, YE.I.

COUNTRY OF INFO--USSR

SOURCE--KAUCH. REZINA 1970, 29(2), 9-10

DATE PUBLISHED-------70

SUBJECT AREAS--MATERIALS

TOPIC TAGS--ISOPRENE, CRYSTALLIZATION, BUTADIENE STYRENE RESIN, FILLER, METAL OXIDE, ELASTOMER, CARBON BLACK, ZINC OXIDE, CALCIUM CARBONATE, SULFIDE/(U)U333 CARBON BLACK, (U)DG100 CARBON BLACK, (U)PM70 CARBON BLACK

CONTROL MARKING--NO RESTRICTIONS

DOCUMENT CLASS--UNCLASSIFIED

PROXY REEL/FRAME--1997/0456 STEP NO--UR/0138/70/029/002/0009/0010

CIRC ACCESSION NO--AP0119392

UNCLASSIFIED

APPROVED FOR RELEASE: 09/17/2001 CIA-RDP86-00513R002202620003-4"

"APPROVED FOR RELEASE: 09/17/2001 CIA-RDP86-00513R002202620003-4

2/2 021 UNCLASSIFIED PROCESSING DATE--30OCT70

CIRC ACCESSION NO--AP0119392

ABSTRACT/EXTRACT--(U) GP-0- ABSTRACT. THE EFFECTS OF NONCRYSTG. BUTADIENE STYRENE RUBBER ADDITIVES, FILLERS, METAL OXIDES, AND TRANS ISOMER CONTENT IN CIS ISOPRENE RUBBER (I) ON THE CRYSTN. OF I ELASTOMERS WERE STUDIED. THE CRYSTALLIZABILITY OF I ELASTOMERS DECLINED WHEN THE TRANSISOMER CONTENT WAS LARGER THAN OR EQUAL TO 30PERCENT. I ELASTOMERS FILLED WITH CARBON BLACK U-333, DG-100, AND PM-70 WERE MORE READILY CRYSTALLIZABLE THAN ELASTOMERS FILLED WITH ACTIVATED CACO SUB3. THE CRYSTN. OF I ELASTOMERS WAS MOST INHIBITED IN THE PRESENCE OF ZNO, PRESUMABLY DUE TO THE INCREASED CONTENT OF POLYSULFIDE BONDS.

FACILITY: LENINGRAD. FILIAL NAUCH.-ISSLED. INST. REZIN, PROM., LENINGRAD, USSR.

UNCLASSIFIED

APPROVED FOR RELEASE: 09/17/2001 CIA-RDP86-00513R002202620003-4"

"APPROVED FOR RELEASE: 09/17/2001 CIA-RDP86-00513R002202620003-4

1/3 024 UNCLASSIFIED PROCESSING DATE--23OCT70

TITLE--FORMATION OF METASTABLE PHASES WITH QUARTZ AND BETA EUCRYPTITE TYPE STRUCTURES DURING THE CRYSTALLIZATION OF SPODUMENE SPINEL SYSTEM GLASSES

AUTHOR-(03)-TOROPOV, N.A., SIRAZHIDDINOV, N.A., RAKHMANBEKOV, N.

COUNTRY OF INFO--USSR

SOURCE--IZV. AKAD. NAUK SSSR, NEORG. MATER. 1970, 6(3), 599-600

DATE PUBLISHED-------70

SUBJECT AREAS--MATERIALS

TOPIC TAGS--QUARTZ, GLASS CRYSTALLIZATION, LITHIUM, MAGNESIUM OXIDE, ALUMINUM OXIDE, SILICA, GLASS STRUCTURE

CONTROL MARKING--NO RESTRICTIONS

DOCUMENT CLASS--UNCLASSIFIED

PROXY REEL/FRAME--1997/0610 STEP NO--UR/0363/70/006/003/0599/0600

CIRC ACCESSION NO--AP0119524

UNCLASSIFIED

APPROVED FOR RELEASE: 09/17/2001 CIA-RDP86-00513R002202620003-4"

"APPROVED FOR RELEASE: 09/17/2001 CIA-RDP86-00513R002202620003-4

2/3 .024 UNCLASSIFIED PROCESSING DATE--23OCT70

CIRC ACCESSION NO--AP0119524

ABSTRACT/EXTRACT--(U) GP-0- ABSTRACT. THE SPODUMENE SPINEL SYSTEM WAS STUDIED IN THE PRESENT WORK IN ORDER TO DET. THE VITRIFICATION REGIONS, AND IN RODER TO EXPLAIN THE SUCCESSIVENESS OF THE FORMATION OF THE CRYST. PHASES AS A FUNCTION OF THE COMPN., TIME, AND TEMP. OF CRYSTN. TO DET. THE VITRIFICATION REGIONS, THE SPODUMENE SPINEL SYSTEM WAS SUTDIED EVERY 5 WT. PERCENT. CHEM. PURE LI SUB2 CO SUB3, MGO, AL SUB2 O SUB3, AND SIO SUB2 SERVED AS THE STARTING MATERIALS. FOR THE PREPN. OF THESE GLASSES THE BATCH OF A GIVEN COMPN. WAS MELTED IN PT CRUCIBLES IN A FURNACE EQUIPPED WITH SILIT HEATING ELEMENTS AT 1450-1550DEGREES. THE CAPABILITY OF THE MELT TO VITRIFY DECREASED WITH INCREASING MGAL SUB2 O SUB4 CONTENT. IN ORDER TO INVESTIGATE THE CRYSTN. PROCESSES, THE SYNTHESIZED GLASSES WERE SUBJECTED TO HEAT TREATMENT AT 750-1200DEGREES IN AN AIR ATM., WITH BEING HELD FOR 1.5-50 HR AT THE FINAL TEMP., WHEREUPON THEY WERE QUENCHED IN AIR. BY USING SEVERAL DIFFERENT TECHNIQUES, THE STARTING TEMP. OF THE CRYSTN. WAS DETD. AS DEPENDENT ON THE COMPN., AND THE PRIMARY AND THE SECONDARY CRYST. PHASES WERE STUDIED AS DEPENDENT ON THE TEMP. AND THE TIME, AS WELL AS THEIR INTERRELATION DURING THE CRYSTN. PROCESS AND IN THE FORMATION OF A FINITE STURCTURE. A METASTABLE QUARTZ- OR QUARTZLIKE PHASE FORMS AS THE PRIMARY CRYST. PHASE AT THE EARLY CRYSTN. STAGE. WITH INCREASING CRYSTN. TEMP. THE VISCOSITY OF THE GLASS GRADUALLY DECREASES.

UNCLASSIFIED

APPROVED FOR RELEASE: 09/17/2001 CIA-RDP86-00513R002202620003-4"

"APPROVED FOR RELEASE: 09/17/2001 CIA-RDP86-00513R002202620003-4

3/3 024 UNCLASSIFIED PROCESSING DATE--23OCT70

CIRC ACCESSION NO--AP0119524

ABSTRACT/EXTRACT--THIS RESULTS IN INCREASED MOBILITY OF THE IONS AND THERE OCCURS SIMULTANEOUSLY A SUBSTITUTION OF THE AL PRIME3 POSITIVE AND LI PRIME1 POSITIVE ATOMS BY SI PRIME4 POSITIVE IN THE QUARTZLIKE STURCTURE, THE CHEM. COMPN. OF WHICH TENDS TOWARDS EUCRYPTITE COMPN. THE METASTABLE PHASE OF THE BETA EUCRYPTITE IS OBSERVED AS THE SECONDARY PHASE DURING THE CRYSTN. OF THE GLASSES STUDIED. FACILITY: INST. KHIM. SILIKAT, IM. GREBENSHCHIKOVA, LENINGRAD, USSR.

UNCLASSIFIED

APPROVED FOR RELEASE: 09/17/2001 CIA-RDP86-00513R002202620003-4"

"APPROVED FOR RELEASE: 09/17/2001 CIA-RDP86-00513R002202620003-4

1/2 017 UNCLASSIFIED PROCESSING DATE--20NOV70

TITLE--ALGORITHM FOR PLANNING POLYCLINIC SERVICE -U-

AUTHOR-(02)-POLYAKOV, I.V., RAKHMANIN, G.D.

COUNTRY OF INFO--USSR

SOURCE--MOSCOW, SOVETSKOYE ZDRAVOOKHRANENIYE, RUSSIAN, NO 3, 1970, PP 21-27

DATE PUBLISHED--------70

SUBJECT AREAS--BIOLOGICAL AND MEDICAL SCIENCES

TOPIC TAGS--ALGORITHM, MEDICAL FACILITY, QUEUEING THEORY, MEDICAL PATIENT

CONTROL MARKING--NO RESTRICTIONS

DOCUMENT CLASS--UNCLASSIFIED

PROXY REEL/FRAME--3005/0677 STEP NO--UR/0753/70/000/003/0021/0027

CIRC ACCESSION NO--AP0132798

UNCLASSIFIED

APPROVED FOR RELEASE: 09/17/2001 CIA-RDP86-00513R002202620003-4"

"APPROVED FOR RELEASE: 09/17/2001 CIA-RDP86-00513R002202620003-4

2/2 017 UNCLASSIFIED

CIRC ACCESSION NO--AP0132798 PROCESSING DATE--20NOV70

ABSTRACT/EXTRACT--(U) GP-0- ABSTRACT. IT HAS LONG SINCE BEEN ESTABLISHED THAT THE FLOW OF PATIENTS REQUESTING MEDICAL SERVICE IS EXTREMELY IRREGULAR FROM MONTH TO MONTH IN THE YEAR, FROM DAY TO DAY IN THE WEEK, AND ALSO IN THE COURSE OF THE DAY. THIS IRREGULARITY OF PATIENT FLOW CAUSES AN OVERLOAD OF PHYSICIANS, AND THE QUALITY OF SERVICE TO PATIENTS SUFFERS AS A CONSEQUENCE. IN PLANNING THE NUMBER OF VISITS TO PHYSICIANS, IT THEREFORE BECOMES ESSENTIAL TO ENVISAGE A CERTAIN INCREASE IN THESE VISITS IN MONTHS WHEN A RISE IN THE VISITS TO POLYCLINICS IS OBSERVED, AND, ON THE OTHER HAND, A REDUCTION IN MONTHS WITH A COMPARATIVELY LOW VISIT RATE. MOREOVER, THIS QUESTION IS ASSOCIATED WITH THE RATIONAL DURATION OF VISITS TO THE PHYSICIAN ON VARIOUS DAYS OF THE WEEK AND IN THE COURSE OF THE DAY. IT SEEMS TO US THAT IT IS POSSIBLE TO SOLVE THIS PROBLEM WITH QUEUEING THEORY. FACILITY: CHAIR OF SOCIAL HYGIENE AND PUBLIC HEALTH ORGANIZATION, HEAD, PROFESSOR S. YA. FREYDLIN, OF THE FIRST LENINGRAD MEDICAL INSTITUTE IMENI I. P. PAVLOV, AND THE LENELEKTRONMASH INSTITUTE.

UNCLASSIFIED

APPROVED FOR RELEASE: 09/17/2001 CIA-RDP86-00513R002202620003-4"

"APPROVED FOR RELEASE: 09/17/2001 CIA-RDP86-00513R002202620003-4

USSR

UDC 619:576.809.8:576.851.55:636.51

RAKHMANINA, I. A., TRISHKINA, Ye. T., LYAUSHKIN, A. V., and SEREBRYAKOV, A. S., All-Union Institute of Experimental Veterinary Science

"Properties of Cl. perfringens of Type A Isolated From Chickens"

Moscow, Veterinariya, No 6, Jun 73, pp 99-100

Abstract: Cl. perfringens of type A was found to be present in clinically healthy chickens and chicks. Cultures of this microorganism were isolated in 5% of cases from the intestine and liver of healthy chickens and in 56 and 43% of cases, respectively, from the intestine and liver of chickens with gastrointestinal diseases. On peroral administration to chickens, Cl. perfringens was preserved in the gastrointestinal tract for at least 30 days. On intramuscular administration, it was present in the blood and parenchymatous organs for at least 10 days. The Cl. perfringens strains isolated from healthy and sick chickens were identical. They killed chick embryos, mice, guinea pigs, and chicks and produced disease in adult chickens. One may assume that Cl. perfringens of type A present in healthy chickens multiply and produce complications when the chickens become infected with diseases of the gastrointestinal tract, specifically

1/2

APPROVED FOR RELEASE: 09/17/2001 CIA-RDP86-00513R002202620003-4"

"APPROVED FOR RELEASE: 09/17/2001 CIA-RDP86-00513R002202620003-4

USSR

RAKHMANINA, I. A., et al., Veterinariya, No 6, Jun 73, pp 99-100

those of virus etiology. The strains isolated were sensitive to penicillin, erythromycin, and ampicillin. These antibiotics should be applied on an experimental basis at poultry farms in the case of infections complicated by Cl. perfringens.

2/2

APPROVED FOR RELEASE: 09/17/2001 CIA-RDP86-00513R002202620003-4"

"APPROVED FOR RELEASE: 09/17/2001 CIA-RDP86-00513R002202620003-4

1/2 010 UNCLASSIFIED PROCESSING DATE--23DC70

TITLE--HYGIENIC STUDY OF PIREF DIETHYL PYROCARBONIC ETHER AND ITS POSSIBLE USE IN THE FOOD INDUSTRY -U-

AUTHOR-(03)-ZAYTSEV, A.N., RAKHMANINA, N.L., DYUBYUK, N.YE.

COUNTRY OF INFO--USSR

SOURCE--VOPROSY PITANIYA, 1970, NR 3, PP 14-17

DATE PUBLISHED--------70

SUBJECT AREAS--BIOLOGICAL AND MEDICAL SCIENCES

TOPIC TAGS--FOOD PRESERVATION, ALIPHATIC ETHER

CONTROL MARKING--NO RESTRICTIONS

DOCUMENT CLASS--UNCLASSIFIED

PROXY REEL/FRAME--1998/2045 STEP NO--UR/0244/70/000/003/0014/0017

CIRC ACCESSION NO--AP0122274

UNCLASSIFIED

APPROVED FOR RELEASE: 09/17/2001 CIA-RDP86-00513R002202620003-4"

"APPROVED FOR RELEASE: 09/17/2001 CIA-RDP86-00513R002202620003-4

2/2 010 UNCLASSIFIED PROCESSING DATE--23OCT70

CIRC ACCESSION NO--AP0122274

ABSTRACT/EXTRACT--(U) GP-0- ABSTRACT. DIETHYL PYROCARBONIC ETHER (DPE) IS UTILIZED INMANY COUNTRIES AS A CONSERVING AGENT FOR WINES AND JUICES. PERTINENT CALCULATIONS SHOW DPE IN A DOSE OF 3.6 MG-KG BODY WEIGHT PER DAY CAPABLE OF AFFECTING THE HUMAN ORGANISM. IN THE PRESENT WORK EXPERIMENTAL EVIDENCE IS PRODUCED SHOWING THAT THE DOSE OF 3.6 MG-KG OF DPE PROPOSED BY THE CHEMICAL INSTITUTE OF THE ACADEMY OF SCIENCES OF THE MOLDAV SSR WITH THE TRADE NAME OF "PIREF", SHOULD BE REGARDED AS LIMINAL TOXICOLOGICALLY. PROCEEDING FROM THIS FACT, AND ALSO CONSIDERING THE RATE OF THE PREPARATIONS HYDROLYSIS IN BEVERAGES MAY DECREASE CONSIDERABLY, "PIREF", ACCORDING TO THE AUTHORS, CANNOT BE RECOMMENDED AS A PRESERVATIVE FOR WINES AND WINE PRODUCTS. FACILITY: INSTITUT PITANIYA AMN SSSR, MOSCOW.

UNCLASSIFIED

APPROVED FOR RELEASE: 09/17/2001 CIA-RDP86-00513R002202620003-4"

"APPROVED FOR RELEASE: 09/17/2001 CIA-RDP86-00513R002202620003-4

USSR UDC 542.61

STAROBINETS, G. L., and BAKHMAN'KO, YE. M., Belorussian State Institute imeni V. I. Lenin

"The Extraction of Alkaloids as Complexes with Aromatic Acids"

Minsk, Izvestiya Akademii Nauk BSSR Seriya Khimicheskikh Nauk, No 2, 1972, pp 22-24

Abstract: A study was made of the influence of the nature of the acid on the extraction constant of an aromatic acid-alkaloid complex extracted with toluene. Dimedrol, dionine, Novacaine, papaverine, and salsolidine were the alkaloids used. The acids considered were picric, benzoic and nitrobenzoic. The distribution of alkaloids, acids, and picric acid complexes between phases was determined spectrophotometrically, directly or using the dyes methyl orange and acridine yellow. Due to the similarity of the spectra of the complexes of the various alkaloids with picric acid in toluene and the spectrum of sodium picrate in water in the 300 to 500 nm region, where the alkaloids do not absorb, it was concluded that the complexes are either ion pairs or ions. The considerably different spectrum of picric acid in toluene supports this view. The low electrical conductivity of the complexes in toluol implies that they are ion pairs. It was not possible to establish the nature of

1/2

APPROVED FOR RELEASE: 09/17/2001 CIA-RDP86-00513R002202620003-4"

"APPROVED FOR RELEASE: 09/17/2001 CIA-RDP86-00513R002202620003-4

USSR

STAROBINETS, G. L., and RAKHMAN'KO, YE. M., Izvestiya Akademii Nauk BSSR Seriya Khimicheskikh Nauk, No 2, 1972, pp 22-24

the complexes with benzoic or nitrobenzoic acid. A correspondence between the extraction constant of the complex and the strength of the acid was also found.

2/2

APPROVED FOR RELEASE: 09/17/2001 CIA-RDP86-00513R002202620003-4"

"APPROVED FOR RELEASE: 09/17/2001 CIA-RDP86-00513R002202620003-4

1/2 009 UNCLASSIFIED PROCESSING DATE--30OCT70

TITLE--EFFECT OF DIPOLAR SOLVATING AGENTS ON THE EXTRACTION OF ALKALOIDS BY CHLOROFORM -U-

AUTHOR-(03)-PETRASHKEVICH, S.F., STAROBINETS, G.L., RAKHMANKO, YE.N.

COUNTRY OF INFO--USSR

SOURCE--VESTI AKAD. NAVUK BELARUS. SSR, SER. KHIM. NAVUK 1970, 1, 20-3

DATE PUBLISHED--------70

SUBJECT AREAS--BIOLOGICAL AND MEDICAL SCIENCES

TOPIC TAGS--SOLVENT EXTRACTION, ALKALOID, CHLOROFORM

CONTROL MARKING--NO RESTRICTIONS

DOCUMENT CLASS--UNCLASSIFIED

PROXY REEL/FRAME--1994/0110 STEP NO--UR/0419/70/000/001/0020/0023

CIRC ACCESSION NO--AP0114506

UNCLASSIFIED

APPROVED FOR RELEASE: 09/17/2001 CIA-RDP86-00513R002202620003-4"

"APPROVED FOR RELEASE: 09/17/2001 CIA-RDP86-00513R002202620003-4

2/2 009 UNCLASSIFIED

CIRC ACCESSION NO--AP0114506 PROCESSING DATE--30OCT70

ABSTRACT/EXTRACT--(U) GP-0- ABSTRACT. THE EFFECT OF DIPOLAR SOLVATING AGENTS (PHENOL, M AND P,CRESOL, P,CHLOROCRESOL, O,BROMOCRESOL, O AND P,DIBROMOPHENOL, AND BUTANOL) ON THE EXTN. OF ALKALOIDS (HYDROCHLORIDES OF DIONINE, QUININE, DIMEDROL, SALSOLIDINE, AND NOVOCAINE AND PLATYPHYLLINE BITARTRATE) BY CHCL SUB3 FROM AQ. SOLNS. CONTG. UNIVERSAL BUFFER (PH 3) WAS STUDIED AT 20 PLUS OR MINUS 2DEGREES, VOL. PHASE RATIO 1 TO 1, THE ALKALOID CONCN. 5 TIMES 10 NEGATIVE PRIME4 EQUIV., AND THE SOLVATING AGENT CONCN. 0.1-2.5 MOLE,L. AT A CONST. ANION CONCN. IN THE AQ. PHASE, THE LOG OF THE ALKALOID DISTRIBUTION COEFF. IS A LINEAR FUNCTION OF THE LOG OF THE SOLVATING AGENT CONCN. THE VALUE OF THE EXTN. CONST. IS DETD. BY THE ABILITY OF THE SOLVATING AGENT MOL. TO ACT AS A PROTON DONOR AND BY THE RATIO OF THE HYDROPHOBIC AND POLAR GROUPS IN THE ORG. CATION. THE EFFECTIVE SOLVATION NO. FOR THE SAME IONIC PAIR INCREASES WITH DECREASING PK OF THE SOLVATING AGENT. FACILITY: BELORUSS. GOS. UNIV. IM. LENINA, MINSK, USSR.

UNCLASSIFIED

APPROVED FOR RELEASE: 09/17/2001 CIA-RDP86-00513R002202620003-4"

"APPROVED FOR RELEASE: 09/17/2001 CIA-RDP86-00513R002202620003-4

USSR UDC 621.791.011.08:621.642.669.14

LIVSHITS, L. S., Doctor of Technical Sciences, RAKHMANOV, A. S., Candidate of Technical Sciences, and ROZHDESTVENSKIY, V. V., Candidate of Technical Sciences, All-Union Scientific Research Institute of Main Pipeline Construction

"Brittle-Rupture Stability of Welded Vessels Operating Under Pressure"

Moscow, Svarochnoye Proizvodstvo, No 10, Oct 70, pp 12-13

Abstract: The quantity a_p (kg/cm^2) of steel, the energy index of resistance to development of brittle rupture, is suggested as a basis for a calculation method for determination of conditions controlling the stability of welded vessels operating under pressure to brittle rupture. The method is based on the correspondence of the potential energy of elastic deformation of the walls of the vessel to the energy index of the resistance of steel to development of rupture.

1/1

APPROVED FOR RELEASE: 09/17/2001 CIA-RDP86-00513R002202620003-4"

"APPROVED FOR RELEASE: 09/17/2001 CIA-RDP86-00513R002202620003-4

1/2 036 UNCLASSIFIED PROCESSING DATE--13NOV70

TITLE--ESTIMATING THE BRITTLENESS OF STEEL BY REFERENCE TO THE FORM OF THE FRACTURE -U-

AUTHOR-(05)-ARONE, R.G., BERNSHTEYN, S.V., SOKOLOVSKY, P.I., RAKHMANOV, A.S., SITNOVA, N.V.

COUNTRY OF INFO--USSR

SOURCE--METALLOVEDENIE I TERM. OBRABOT. METALLOV, 1970, (1), 70-72

DATE PUBLISHED--------70

SUBJECT AREAS--MATERIALS, MECH., IND., CIVIL AND MARINE ENGR

TOPIC TAGS--METAL BRITTLENESS, MATERIAL FRACTURE, BIBLIOGRAPHY, PLASTIC DEFORMATION, CARBON STEEL, ALLOY STEEL, MICROSCOPY

CONTROL MARKING--NO RESTRICTIONS

DOCUMENT CLASS--UNCLASSIFIED

PROXY REEL/FRAME--2000/0961 STEP NO--UR/0129/70/000/001/0070/0072

CIRC ACCESSION NO--AP0124524

UNCLASSIFIED

APPROVED FOR RELEASE: 09/17/2001 CIA-RDP86-00513R002202620003-4"

"APPROVED FOR RELEASE: 09/17/2001 CIA-RDP86-00513R002202620003-4

2/2 036 UNCLASSIFIED PROCESSING DATE--13NOV70

CIRC ACCESSION NO--AP0124524

ABSTRACT/EXTRACT--(U) GP-0- ABSTRACT. THE ADVANTAGES AND DISADVANTAGES OF ESTIMATING THE BRITTLENESS OF C AND ALLOY STEELS BY ANALYSING THE FORM OF THE FRACTURE IN TENSIL TEST SAMPLES ARE DISCUSSED. ANY ESTIMATE OF THE ENERGY CAPACITY OF THE RUPTURE PROCESS BASED SOLELY ON THE EXTERNAL APPEARANCE OF THE FRACTURE IS VERY ROUGH, SINCE IT TAKES NO ACCOUNT OF MICROSCOPIC PLASTIC DEFORMATIONS.

UNCLASSIFIED

APPROVED FOR RELEASE: 09/17/2001 CIA-RDP86-00513R002202620003-4"

"APPROVED FOR RELEASE: 09/17/2001 CIA-RDP86-00513R002202620003-4

AA0047843 RAKHMANOV N.N.

UR 0482

Soviet Inventions Illustrated, Section III Mechanical and General, Derwent, /-70

237364 .. PIPE GRIPPING AND TRANSPORTING DEVICE

comprising traverse, crane suspension interacting with a fixer, and rectangular frame with cranks connected to each other by a rack and also connected to vertical turning rods, carrying arms for gripping the pipes, differing in having an attachment consisting of an angular crank fixed on the rack, with a pivot-and-rod mechanisms connected to it and to the traverse and frame. This automates the gripping process when sprocket 15 wedges slide-block 12 relative to strut 14, rod 9 is lowered, and rod 8 turns the gripping arms to the non-working position. In this way the device is transported without pipes. When it is lowered onto pipes, the arms enter the clearances between them. The frame stops, but the slide-block, continuing to descend, turns sprocket 15 vertically. In this position the slide block is raised, gripping traverse 11.

18

1/3

19791501

APPROVED FOR RELEASE: 09/17/2001 CIA-RDP86-00513R002202620003-4"

"APPROVED FOR RELEASE: 09/17/2001 CIA-RDP86-00513R002202620003-4

AA0047843

Acting via rods 10, 9 and 8, and also via the cranks, it turns the arms 90 deg., bringing them under the pipes on the next lowering onto the support. As the slide-block moves down, sprocket 15 again engages the slide-block with strut 16, and the arms are turned 90 deg. by the weight of the traverse to the non-working position, and the pipes are released. 22.3.66. as 1063489/27-11, RAKHMANOV, N.N. (24.6.69) Bul. 8/12.2.69. Class 35b, Int. Cl. B 66c.

2/3

19791502

APPROVED FOR RELEASE: 09/17/2001 CIA-RDP86-00513R002202620003-4"

"APPROVED FOR RELEASE: 09/17/2001 CIA-RDP86-00513R002202620003-4

AA0047843

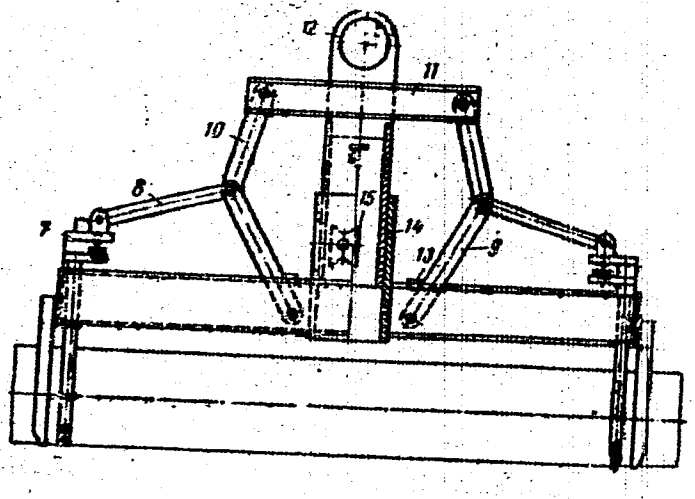

3/3

19791503

APPROVED FOR RELEASE: 09/17/2001 CIA-RDP86-00513R002202620003-4"

"APPROVED FOR RELEASE: 09/17/2001 CIA-RDP86-00513R002202620003-4

USSR

RAKHMANOV, R.

UDC: 517.948.34

"Continuity of the Solution of a Class of Integrodifferential Equations"

Tr. Samarkand. un-ta (Transactions of the University of Samarkand) 1970, No. 181, pp 110-115 (from RZh-Matematika, No. 3, March 71, Abstract No. 3B280)

Translation: It is assumed that the boundary value problem

$$L[u(x)] = \int_0^1 K(x,s,u(s),\mu)L[u(s)]\,ds + F(x,u(x),\mu),$$

$$R_i(u) = \sum_{k=0}^{n-1}\left[\alpha_{ik}\left(\frac{d^k u}{dx^k}\right)_{x=0} + \beta_{ik}\left(\frac{d^k u}{dx^k}\right)_{x=1}\right] = 0,$$

$$i = 1,\ldots,n,$$

where $L[u(x)] = \sum_{k=0}^{n} a_k(x)u^{(n-k)}(x)$, $a_0(x) \neq 0$, $x \in [0,1]$,

1/2

APPROVED FOR RELEASE: 09/17/2001 CIA-RDP86-00513R002202620003-4"

"APPROVED FOR RELEASE: 09/17/2001 CIA-RDP86-00513R002202620003-4

USSR

RAKHMANOV, R., Tr. Samarkand. un-ta, 1970, No. 181, pp 110-115

has the solution $u_0(x)$ for $\mu = \mu_0$; through the use of series, the solution of this problem is obtained for the case of $\mu = \mu_0 + \lambda$ when the eigenvalue of the kernel of the auxiliary equation is not unity. L. Krivoshein

2/2

APPROVED FOR RELEASE: 09/17/2001 CIA-RDP86-00513R002202620003-4"

"APPROVED FOR RELEASE: 09/17/2001 CIA-RDP86-00513R002202620003-4

USSR

UDC: 621.316.721

KOZLOV, Yu. A. and RAKHMANOV, V. F. /Moscow Aviation Institute/

"Device for Controlling the Magnitude and Direction of an Electric Current Flowing Through a Load Element"

USSR Author's Certificate No 274497, filed 15 Jul 68, published 29 Sep 70 (from RZh-Avtomatika, telemekhanika i vychislitel'naya tekhnika, No 12, 1971, Abstract No 12A186P)

Translation: The invention described is concerned with the area of controlling a current flowing through an element and, particularly, with devices through which, by means of external control action, the intensity and direction of the current can be changed and which also permit setting up a common position for the device and the external controlling action. Devices for the control of the magnitude and direction of electric current flowing through a load element through the use of an external controlling action are known. The proposed device differs in that the lines conducting the current are made in the form of physical spatially closed nodes: e.g., pentagrams, which are symmetrical with respect to the plane intersecting the conducting lines in at least one point of their spatial crossing and are opposite 2 vertices to which are connected external incoming and outgoing feed lines,

1/2

APPROVED FOR RELEASE: 09/17/2001 CIA-RDP86-00513R002202620003-4"

"APPROVED FOR RELEASE: 09/17/2001 CIA-RDP86-00513R002202620003-4

USSR

UDC: 621.316.721

KOZLOV, Yu. A., et al, USSR Author's Certificate No 274497

while the source and sink of the load element are connected at the points of their spatial crossing. The external controlling action may be a light flux, a magnetic field, or a temperature, depending on the form of controlling action to which the material used for making the chain of nodes is sensitive. This permits regulating the magnitude and direction of the electric current flowing through an element, through the use of an external controlling action affecting the current-conducting lines -- by varying their resistance, for example. Resume

2/2

APPROVED FOR RELEASE: 09/17/2001 CIA-RDP86-00513R002202620003-4"

"APPROVED FOR RELEASE: 09/17/2001 CIA-RDP86-00513R002202620003-4

AZIMOV, S. A., MYALKOVSKIY, V. M., NURITDINOV, Kh., RASULKULOV, M. S., ABDULLAYEV, A. M., BEYSEMBAYEV, R. U., GAVRILIN, Ye. V., TALIPOV, D. A., MULLAZHONOV, E. Zh., TILLAYEV, T., RAKHMANOV, Zh., UMEROV, R., ULIMAYEVA, F. A., KHEN, E., YULDASHBAYEV, T. S., Institute of Nuclear Physics of the Academy of Sciences Uzbek SSR

"Study of the Characteristics of High-Energy Interactions of Pions and Nucleons"

Moscow, Izvestiya Akademii Nauk SSSR, Seriya Fizicheskaya, Vol. 36, No. 8, Aug 72, pp 1626-1631

Abstract: Experimental data obtained at the Kum-Bel' High-Altitude Station of the Physicotechnical Institute of the Academy of Sciences Uzbek SSR are reported. The station is 3200 m above sea level. The setup contains three series of wide-gap spark chambers with effective areas of 2 m^2 placed above and below the target. The Cerenkov spectrometer with total absorption and an ionization calorimeter with an area of 10 m^2 were used to measure the primary energy E_0. Up to the present time experimental data obtained over 630 hours of operation of the device have been processed, with a high-voltage pulse being supplied to the electrodes of the spark chambers. Showers with an energy of >200 Gev generated in the target were selected for analysis. The following ratio was obtained for the number

1/2

APPROVED FOR RELEASE: 09/17/2001 CIA-RDP86-00513R002202620003-4"

"APPROVED FOR RELEASE: 09/17/2001 CIA-RDP86-00513R002202620003-4

USSR

AZIMOV, S. A., et al., Izvestiya Akademii Nauk SSSR, Seriya Fizicheskaya, Vol 36, No 8, Aug 72, pp 1626-1631

of primary charged N_c and neutral N_n particles: $N_c/N_n = 2.3 \pm 0.3$; this shows that the proportion of charged particles is ~34% of all nuclear active particles, thus making it possible to study pion-nuclear collisions by comparing the characteristics of the interaction of charged and neutral primary particles. A weak functional dependence between the inelasticity coefficient $\langle K_{\pi\phi} \rangle$ and the atomic number of the target nucleus and a strong functional dependence between this coefficient and the nature of the primary particles were obtained for interactions of hadron with $E_0 > 200$ Gev. $\langle n_s \rangle$ is almost a logarithmic function of E_0. The average multiplicity in the interaction of pions with neutrons in paraffin is identical within the experimental limit. A considerable azimuthal effect was observed for the angular distribution of secondary particles. The azimuthal effect has its greatest value for showers with n_s = 8-15, or a multiplicity close to average.

2/2

APPROVED FOR RELEASE: 09/17/2001 CIA-RDP86-00513R002202620003-4"

"APPROVED FOR RELEASE: 09/17/2001 CIA-RDP86-00513R002202620003-4

USSR UDC 616-008.922.1.04-089:616.839-089.85-07:616.12-008.1-072.7

NOVIKOVA, N. A., KOROCHKIN, L. I., and RAKHMANOVA, T. B., Institute of Normal and Pathological Physiology, Academy of Medical Sciences USSR, and Institute of Cytology and Genetics, Siberian Department, Academy of Sciences USSR, Novosibirsk

"Effect of 'Immunologic Sympathectomy' on the Cardiac and Respiratory Rates in High-Altitude Hypoxia"

Moscow, Kardiologiya, No 12, 1971, pp 98-99

Abstract: "Immunologic sympathectomy" was performed in 1- to 5-day-old rats by injecting them with antibody to the nerve growth factor. Histologic examination of the sympathetic trunk a month later revealed a sharp decrease in the number of cells and concomitant disappearance of norepinephrine from the myocardium but increased concentration of epinephrine. The spinal ganglia, however, were little affected by the immune serum. The resistance of the "sympathectomized" animals to hypoxia induced by gradual "elevation" in a pressure chamber to "altitudes" of 1000 to 11,000 m (as determined from the EKG, pneumogram, and rectal temperature) was virtually the same as the control. This finding can be reconciled with published references to lowered resistance of sympathectomized animals to acute hypoxia by assuming that the sympathetic nervous

1/2

APPROVED FOR RELEASE: 09/17/2001 CIA-RDP86-00513R002202620003-4"

"APPROVED FOR RELEASE: 09/17/2001 CIA-RDP86-00513R002202620003-4

USSR

NOVIKOVA, N. A., et al., Kardiologiya, No 12, 1971, pp 98-99

system is mobilized by sudden acute hypoxia but not when there is a possibility of slow, gradual adaptation to a deficiency of oxygen.

2/2

APPROVED FOR RELEASE: 09/17/2001 CIA-RDP86-00513R002202620003-4"

"APPROVED FOR RELEASE: 09/17/2001 CIA-RDP86-00513R002202620003-4

USSR

RAKHMATKARIYEV, E. U.

UDC: 51:621.391

"A Method of Constructing Linear Codes Which Correct Multiple Error Bursts"

V sb. Vopr. kibernetiki (Problems of Cybernetics--collection of works), vyp. 46, Tashkent, 1971(1972), pp 182-188 (from RZh-Kibernetika, No 8, Aug 72, Abstract No 8V499)

Translation: Representation of a code check matrix in the form of a Kronecker product of the check matrices of known codes is used to synthesize codes which correct multiple error bursts. The work suffers from lack of clarity in the exposition. V. Dyn'kin.

1/1

APPROVED FOR RELEASE: 09/17/2001 CIA-RDP86-00513R002202620003-4"

"APPROVED FOR RELEASE: 09/17/2001 CIA-RDP86-00513R002202620003-4

USSR

RAKHMATKARIYEV, E. U.

UDC: 51:621.391

"A Method of Constructing Minimally Redundant Error-Burst Correcting Codes"

V sb. Vopr. kibernetiki (Problems of Cybernetics--collection of works), vyp. 46, Tashkent, 1971(1972), pp 174-181 (from RZh-Kibernetika, No 8, Aug 72, Abstract No 8V498)

Translation: Codes are constructed whose check matrices are represented in the form of the Kronecker product of the check matrices of known codes. Certain combinations of code components yield minimally redundant codes. Certain parts of the work are not clearly presented. V. Dyn'kin.

1/1

APPROVED FOR RELEASE: 09/17/2001 CIA-RDP86-00513R002202620003-4"

"APPROVED FOR RELEASE: 09/17/2001 CIA-RDP86-00513R002202620003-4

USSR

UDC 541.183

DUBININ, M. M., ISIRIKYAN, A. A., RAKHMATKARIYEV, G. U., and SERPINSKIY, V. V.,
Institute of Physical Chemistry, Academy of Sciences USSR

"Adsorption Energy of Gases and Vapors on Microporous Adsorbents. 3. Differential Heats of Water Adsorption on Crystalline Synthetic NaA Zeolite"

Moscow, Izvestiya Akademii Nauk SSSR, Seriya Khimicheskaya, No 6, Jun 72, pp 1269-1276

Abstract: The article describes results of the measurement of the differential heats of water vapor adsorption on crystalline NaA zeolite. A Tian-Calvet microcalorimeter was used, as well as a newly built adsorption plant in which the lubricated cocks were replaced by mercury cutoffs. The results were found to be in agreement with analogous measurements previously made by the authors on preformed NaA zeolite. The adsorption equilibrium time obtained from thermokinetic curves is found to increase with coverage, passing through a maximum at $a = 2.3$ mM/g and then sharply declining to several hours at $a > 4$ mM/g. This corresponds to the blocking by adsorbed water molecules of all 8-membered oxygen openings into the large cavities. The formation of a minimum and second maximum is also noted in the thermokinetic curves. This is due to the nonequilibrium adsorption process and the specifics of the energy processes which take place therewith.

1/1 The authors thank S. P. ZHDANOV for providing the NaA zeolite specimen.

APPROVED FOR RELEASE: 09/17/2001 CIA-RDP86-00513R002202620003-4"

"APPROVED FOR RELEASE: 09/17/2001 CIA-RDP86-00513R002202620003-4

USSR

RAKHMATULIN, Kh. A. and MEVLYUDOV, S. I., Order of Red Labor Banner Institute of Cybernetics, Academy of Sciences Uzbek SSR

UDC 532.501.117

"One Limiting Case in a Multiphase Flow Around Fine Solids"

Tashkent, Izvestiya Akademii Nauk, Uzbek SSR--Seriya Tekhnicheskikh Nauk, No 6, 1972, pp 31-35

Abstract: The relationship of pressure to average mixture density, revealed for single-velocity motion, has been applied to solve problems of multispeed flow of a solid and is used in this work. The path of a uniform steady-state flow of gas containing fine particles of a solid with velocity U_0 flows into a thin symmetrical shape. The particles, being reflected from a solid surface, form a boundary region II. The boundary line of flow of the reflected particles (interface line) divides the excitation region into two parts: I--that part bounded by the frontal wave and interface line (supersonic case) and II--the part bounded by the interface line and solid surface.

A three-speed model was applied to region II and taken through a mathematical treatment starting with the basic equations of mutual penetrating movements of multicomponent media and ending with the following solution:

1/2

APPROVED FOR RELEASE: 09/17/2001 CIA-RDP86-00513R002202620003-4"

"APPROVED FOR RELEASE: 09/17/2001 CIA-RDP86-00513R002202620003-4

USSR

RAKHMATULIN, Kh. A. and MEVLYUDOV, S. I., Izvestiya Akademii Nauk, Uzbek SSR--Seriya Tekhnicheskikh Nauk, No 6, 1972, pp 31-35

$$F'(t) \sim 1/(t^{1+\varepsilon}), \quad (\varepsilon > 0)$$

for $t \to$ infinity. 24 equations, 4 bibliographic references.

2/2

APPROVED FOR RELEASE: 09/17/2001 CIA-RDP86-00513R002202620003-4"

"APPROVED FOR RELEASE: 09/17/2001 CIA-RDP86-00513R002202620003-4

USSR

UDC: 533.69.01+533.662.013

MAMADALIYEV, N. A., RAKHMATULIN, Kh. A.

"Flow of a Two-Phase Medium With Solid Particles Around a Thin Foil"

V sb. Volny v neuprugikh sredakh (Waves in Inelastic Media--collection of works), Kishinev, Academy of Sciences of the Moldavian SSR, 1970, pp 146-152 (from RZh-Mekhanika, No 4, Apr 71, Abstract No 4B260)

Translation: A model is proposed for flow of a two-phase medium around a foil with regard to the reflection of particles from the edge of the foil. The model assumes delineation between regions of two-velocity and three-velocity motion (the third velocity is that of the solid particles reflected from the edge). For the case of flow around a wedge when the concentration of solid particles is low, a solution is given for the direct and inverse problem, the line of demarcation terminating in a straight line with an angle of inclination equal to twice the half-angle of the wedge vertex. In the case of a high concentration of solid particles, where consideration must be given to the mutual effect of the phases, an approximate solution is considered in which the effect of the reflected flux on the motion of the two-phase medium is disregarded. In this formulation, the inverse problem is considered in detail; in this regard, in the case of a straight line of demarcation, the edge of the profile is weakly concave rather than straight. V. I. Putyata.

1/1

APPROVED FOR RELEASE: 09/17/2001 CIA-RDP86-00513R002202620003-4"

"APPROVED FOR RELEASE: 09/17/2001 CIA-RDP86-00513R002202620003-4

UNCLASSIFIED

TITLE--THEORETICAL PROBLEMS OF WAVE PROPAGATION IN CONTINUOUS MEDIA -U-

PROCESSING DATE--30OCT70

AUTHOR--RAKHMATULIN, KH.A.

COUNTRY OF INFO--USSR

SOURCE--MOSKOVSKII UNIVERSITET, VESTNIK, SERIIA I MATEMATIKA, MEKHANIKA, VOL. 25, MAR. APR. 1970, P. 97-106

DATE PUBLISHED--------70

SUBJECT AREAS--PHYSICS

TOPIC TAGS--WAVE PROPAGATION, WAVE MECHANICS, PRESSURE DISTRIBUTION, SHOCK WAVE REFLECTION, SAND, ELASTICITY THEORY, NONLINEAR EFFECT

CONTROL MARKING--NO RESTRICTIONS

DOCUMENT CLASS--UNCLASSIFIED

PROXY REEL/FRAME--1996/0933

STEP NO--UR/0055/70/025/000/0097/0106

CIRC ACCESSION NO--AP0118099

UNCLASSIFIED

APPROVED FOR RELEASE: 09/17/2001 CIA-RDP86-00513R002202620003-4"

"APPROVED FOR RELEASE: 09/17/2001 CIA-RDP86-00513R002202620003-4

2/2 044 UNCLASSIFIED

CIRC ACCESSION NO--AP0118099 PROCESSING DATE--30OCT70

ABSTRACT/EXTRACT--(U) GP-0- ABSTRACT. DISCUSSION OF A CLASS OF NONLINEAR PROBLEMS OF WAVE DYNAMICS INVOLVING THE STRESS STRAIN STATE OF A HALF SPACE DUE TO PRESSURE OR LOAD EXPANDING OVER ITS BOUNDARY. ALSO CONSIDERED ARE A PLANE WAVE OF VARIABLE PROFILE INCIDENT ON A CYLINDER OR A SPHERE, REFLECTION OF AN EXPLOSION WAVE FROM THE FREE SURFACE OF THE HALF SPACE, PROPAGATION OF A WAVE IN A HALF SPACE FILLED WITH WATER SATURATED SAND, AND A FLOW OF A MULTICOMPONENT MEDIUM PAST A BODY. A METHOD FOR SOLVING THESE PROBLEMS IS DESCRIBED. THE METHOD IS APPLIED TO STATIC AND DYNAMIC PROBLEMS OF THE THEORY OF ELASTICITY AND THE THEORY OF DEFORMATION.

UNCLASSIFIED

APPROVED FOR RELEASE: 09/17/2001 CIA-RDP86-00513R002202620003-4"

"APPROVED FOR RELEASE: 09/17/2001 CIA-RDP86-00513R002202620003-4

Acc. Nr.: AP0042363

Ref. Code: UR0203

JPRS 50162

Method for Computing Earth's Magnetic Field Upward in Space

(Abstract: "Method for Computing the Earth's Magnetic Field Upward in Near-Earth Space," by B. D. Viuts, V. I. Pochtarev and R. Sh. Rakhmatulin, Leningrad Division, Institute of Terrestrial Magnetism, Ionosphere and Radio Wave Propagation; Moscow, Geomagnetizm i Aeronomiya, Vol X, No 1, 1970, pp 119-128)

In the compilation of high-altitude maps of the earth's magnetic field in near-earth space the errors arising in scaling are accompanied by errors arising due to inaccuracies in the initial material, that is, in ground, sea and aeromagnetic measurements. By application of the theory of random fields it is demonstrated in this article that with an increase in altitude the influence of errors in initial materials on the accuracy of high-level maps is substantially reduced.

12

Reel/Frame
19760310

APPROVED FOR RELEASE: 09/17/2001 CIA-RDP86-00513R002202620003-4"

"APPROVED FOR RELEASE: 09/17/2001 CIA-RDP86-00513R002202620003-4

Hematology

USSR

UDC 616-018.46-089.843

KOVALENKO, P. P., and RAKHMATULLAYEV, A. B., Rostov Medical Institute and Uzbek Scientific Institute of Hematology and Blood Transfusion

"Clinical Characteristics of Reactions to Autotransplantation of Frozen Bone Marrow"

Leningrad, Vestnik Khirurgii imeni I. I. Grekov, No 2, 1971, pp 114-116

Abstract: Side effects were observed in 11 or 50 patients who received autografts of frozen bone marrow after undergoing surgery and x-ray therapy for lung cancer. The bone marrow was frozen at -60°C in a medium containing about 15% glycerin. In four of the 11, the side effects were due to the fact that the frozen bone marrow after thawing was treated with a glucose-sucrose mixture but not centrifuged to remove the excess preservative. The reactions included headache, elevated temperature, chills, rapid pulse, ringing in the ears and in one case, numbness in the lower extremities, vertigo, and nausea. The post-transfusion reactions in the other seven patients that resulted from improper thawing of the bone marrow, which was admixed with hemolyzed RBC, consisted mainly of the appearance of fresh RBC and traces of albumin in the urine. In both groups the symptoms disappeared spontaneously or after appropriate treatment. The article concludes with mention of several procedures that can prevent the development of the above side effects.

1/1

APPROVED FOR RELEASE: 09/17/2001 CIA-RDP86-00513R002202620003-4"

"APPROVED FOR RELEASE: 09/17/2001 CIA-RDP86-00513R002202620003-4

USSR

R

NEKOVALEVA, N. A., Candidate of Medical Sciences, [illegible], A. R., and LITVINENKO, T. G., Chair of Roentgenology and Radiology, Chair of Hospital Surgery, and TsNIIL, Rostov Medical Institute, and Uzbek Scientific Research Institute of Hematology and Blood Transfusion

"Histochemical Studies of Alkaline Phosphatase and Glycogen in Leukocytes during Acute Experimental Radiation Sickness"

Tashkent, Meditsinskiy Zhurnal Uzbekistana, No 1, 1970, pp 68-70

Abstract: Shifts in alkaline phosphatase and glycogen concentration in leukocytes were studied during radiation sickness. A total of nineteen rabbits were irradiated with 1000 r. After twenty-four hours, ten of them received bone marrow transplants from donor rabbits. The remaining nine rabbits received no transplants and were controls. Blood smears were stained by the Shabadash method to determine glycogen and by the Petrov and Zaretska method to determine alkaline phosphatase. Five control rabbits died within 27 days (on the average), and the other four survived. The number of leukocytes with decreased content of glycogen fell from 8.9%

1/3

APPROVED FOR RELEASE: 09/17/2001 CIA-RDP86-00513R002202620003-4"

"APPROVED FOR RELEASE: 09/17/2001 CIA-RDP86-00513R002202620003-4

USSR

NEKOVALEVA, N. A., et al., Tashkent, Meditsinskiy Zhurnal Uzbekistana, No 1, 1970, pp 68-70

in controls to 38% on the 7th day after irradiation, returned to normal on the 20th day, and rose again to 36% on the 30-60th day. Glycogen concentration per mm^3 of blood decreased three-fold on the 7th day. An increased number of destroyed leukocytes was observed only on the 30-60th day. The number of leukocytes was increased phosphatase concentration rose five times on the 15th-30th day. The average phosphatase concentration in leukocytes increased from 140 in controls to 191 on the 30th day. Phosphatase concentration per mm^3 of blood decreased from 11.9 in controls to 4.5 on the 15th day. In the experimental group of ten animals, four rabbits died within 50 days (on the average). The number of leukocytes with decreased glycogen concentration was 6.3% in controls, remained unchanged on the 7th day after irradiation, rose to 19.6% on the 15th day, and stayed at this level until the 30th day. The average glycogen concentration in leukocytes increased from 179 in controls to 208 on the 15th day and 210 on the 30th day. Glycogen concentration per mm^3 of blood decreased from 13.0 in controls to 8.5 on the 7th day, slightly increased to 9 on the 15th day, and reached 12.2 on the 30th day. This was accompanied by a corresponding drop

2/3

APPROVED FOR RELEASE: 09/17/2001 CIA-RDP86-00513R002202620003-4"

"APPROVED FOR RELEASE: 09/17/2001 CIA-RDP86-00513R002202620003-4

USSR

NEKOVALEVA, N. A., et al., Tashkent, Meditsinskiy Zhurnal Uzbekistana, No 1, 1970, pp 68-70

in leukocyte count. The findings indicate that marrow transplants diminish fluctuations in leukocyte glycogen concentration during radiation sickness. The number of leukocytes with increased phosphatase concentration rose from 10% in controls to 32% on the 15th and 65% on the 20th day. The average phosphatase concentration in leukocytes increased two-fold on the 20th day. Total phosphatase activity rose from 12 in the controls to 17, despite the reduced leukocyte count. The increased phosphatase activity during radiation sickness in animals with bone marrow transplants may be regarded as an intensification of oxidative and restorative processes in the body.

3/3

APPROVED FOR RELEASE: 09/17/2001 CIA-RDP86-00513R002202620003-4"

"APPROVED FOR RELEASE: 09/17/2001 CIA-RDP86-00513R002202620003-4

USSR

RAKHMATULLAYEV, T. U., YUNUSOV, S. Yu., "Order of the Red Banner of Labor"
Institute of the Chemistry of Plant Materials, Uzbek SSR Academy of Sciences

UDC: 547.944/945

"Alkaloids of Gentiana Olivieri"

Tashkent, Khimiya Prirodnykh Soyedineniy, No 1, 1973, pp 64-67

Abstract: The chloroform part of a mixture of alkaloids of Gentiana olivieri was treated with chloroform; the sum was not completely dissolved. Gentiananin was isolated from the undissolved portion. The chloroform soluble part of the alkaloid sum was treated with a phosphate buffer with resultant separation into fractions by strength of alkalinity. The resultant bases are identified as gentioflavin, gentiananin and a new base $C_{20}H_{20}N_2O_4$ which the authors call "oliveramine". Analysis of UV, IR, NMR and mass spectra suggest that the most probable structure of this compound is

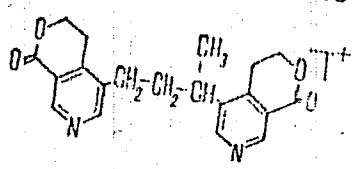

1/1

APPROVED FOR RELEASE: 09/17/2001 CIA-RDP86-00513R002202620003-4"

"APPROVED FOR RELEASE: 09/17/2001 CIA-RDP86-00513R002202620003-4

USSR

UDC 547.944/945

[redacted], and YUNUSOV, S. Yu., Order of the Labor Red Banner Institute of the Chemistry of Natural Products, Acad. Sc., UzSSR

"Gentiana Olivieri Alkaloids"

Tashkent, Khimiya Prirodnykh Soyedineniy, No 3, 1972, pp 350-353

Abstract: From the ether extracts of Gentiana Olivieri, the following alkaloids were isolated in routine manner: gentiotibetine, gentiananine, gentianine, oliverine, and a base with a m.p. 253-254°. A condensation product of gentianine with chloroform was isolated from chloroform residue; its m.p. was 134-135°C.

1/1

APPROVED FOR RELEASE: 09/17/2001 CIA-RDP86-00513R002202620003-4"

"APPROVED FOR RELEASE: 09/17/2001 CIA-RDP86-00513R002202620003-4

USSR

UDC 547.944/945

RAKHMATULLAYEV, T. H., and YUNUSOV, S. YU., Order of the Labor Red Banner Institute of the Chemistry of Natural Products, Acad. Sc. UzSSR

"Alkaloids of Dipsacus Azureus"

Tashkent, Khimiya Prirodnykh Soyedineniy, No 3, 1972, p 400

Abstract: Studying the alkaloid content in the seeds of Dipsacus azureus Schrenk, a compound was isolated from the chloroform extract with a m. p. 130-131°. On the basis of physical properties (UV, IR, NMR, and Mass-spectrometry) this compound was identified as Canthleyine.

1/1

APPROVED FOR RELEASE: 09/17/2001 CIA-RDP86-00513R002202620003-4"

"APPROVED FOR RELEASE: 09/17/2001 CIA-RDP86-00513R002202620003-4

USSR

UDC 614.37:632.95:061.3(575.1) "1970"

RAKHMATULLAYEVA, M. D., Candidate of Medical Sciences

"Scientific and Practical Conference on Protecting the People's Health Against the Widespread Use of Pesticides in Uzbekistan"

Moscow, Gigiyena i Sanitariya, No 4, 1971, pp 115-116

Translation: The Uzbek Society of Hygienists and Health Officers and the Uzbek Scientific Research Institute of Sanitation, Hygiene, and Occupational Diseases organized a routine practical and scientific conference in Tashkent. It was held on 19 June 1970 and was attended by 150 persons.

Prof. K. S. Zairov, Minister of Health, Uzbke SSR, read a long paper on the "Tasks of Medical Workers in the Light of the Widespread Use of Toxic Chemicals in Cotton Growing" in which he described the conditioned under which the pesticides are used and set forth concrete tasks for medical workers in protecting the people's health against the effects of toxic chemicals. He noted that the Uzbek Society of Hygienists and Health Officers is not working as effectively in this field as it should.

Sh. T. Atabayev, Candidate of Medical Sciences and Director of the Uzbek Scientific Research Institute of Sanitation, Hygiene, and Occupational

1/3

APPROVED FOR RELEASE: 09/17/2001 CIA-RDP86-00513R002202620003-4"

"APPROVED FOR RELEASE: 09/17/2001 CIA-RDP86-00513R002202620003-4

USSR

RAKHMATULLAYEVA, M. D., Gigiyena i Sanitariya, No 4, 1971, pp 115-116

Diseases, discussed environmental protection against the use of pesticides. He also described in detail the circulation of pesticides in the environment and resulting changes in the vitamin and trace element composition of crops.

Problems in hygiene and toxicology arising from the use of pesticides were the subject of a paper by T. I. Iskanderov, Candidate of Medical Sciences. Specifically, he reported that as a result of research less toxic insecticides (antio, kilval, and so forth). L. A. Kachenovich, Candidate of Medical Sciences, dealt with the clinical picture and pathogenesis of acute and chronic mixed poisonings by pesticides.

Prof. G. M. Makhkamov discussed residual amounts of toxic chemicals in food products and proposed concrete methods for preventing them from being contaminated by these substances.

The effect of toxic chemicals on the immunobiological state of the body and labor hygiene in connection with the use of defoliants and desiccants were described in the papers of Professors A. Z. Zakhidov, I. M. Geller, and Ponomareva and Docents M. M. Demidenko and L. N. Plakhova.

Interesting comments on practical matters were made by S. A. Aripov, Candidate of Medical Sciences, M. D. Rabayev (Samarkand Oblast), and V. Kh. Khasanov (Khorezm Oblast).

2/3

APPROVED FOR RELEASE: 09/17/2001 CIA-RDP86-00513R002202620003-4"

"APPROVED FOR RELEASE: 09/17/2001 CIA-RDP86-00513R002202620003-4

USSR

RAKHMATULLAYEVA, M. D., Gigiyena i Sanitariya, No 4, 1971, pp 115-116

After the conference was over, Prof. S. N. Babadzhanov gave a report on the activity of the Uzbek Society of Hygienists and Health Officers during the past three years. A number of critical remarks were made in the ensuing discussion.

A new presidium and executive committee of the Uzbek Society of Hygienists and Health Officers were elected.

3/3

APPROVED FOR RELEASE: 09/17/2001 CIA-RDP86-00513R002202620003-4"

"APPROVED FOR RELEASE: 09/17/2001 CIA-RDP86-00513R002202620003-4

USSR

UDC 547.26'118

PUDOVIK, A. N., GUR'YANOVA, I. V., and RAKHMATULLINA, L. Kh., Kazan' State University imeni Ul'yanov-Lenin

"Reactions of Dialkyl Anilidophosphites with Esters of Pyruvic and Glyoxylic Acid"

Leningrad, Zhurnal Obshchey Khimii, Vol 40, No 7, Jul 70, pp 1485-1489

Abstract: The authors studied reactions of the methyl, ethyl, butyl esters of pyruvic acid and the butyl ester of glyoxylic acid with diethyl and dibutyl anilidophosphites and diethyl-p-anisidino- and diethyl-p-toluidinophosphites at -5° and +100° with an equimolecular reagent ratio or with an excess of the carbonyl compound. It was found that, regardless of the reaction temperature or the reagent ratio, the reactions give O, O-dialkyl-O-α-carbalkoxyalkyl-N-phenylimidophosphates.

1/1

APPROVED FOR RELEASE: 09/17/2001 CIA-RDP86-00513R002202620003-4"

"APPROVED FOR RELEASE: 09/17/2001 CIA-RDP86-00513R002202620003-4

UNCLASSIFIED

TITLE--TEMPERATURE FUNCTION OF THE SPECIFIC HEAT AND ELECTRIC RESISTANCE OF DYSPROSIUM NEAR THE NEEL POINT -U- PROCESSING DATE--30OCT70

AUTHOR-(04)-AMITIN, YE.B., KOVALEVSKAYA, YU.A., RAKHMENKULOV, F.S., PAUKOV, I.YE.

COUNTRY OF INFO--USSR

SOURCE--FIZ. TVERD. TELA 1970, 12(3), 774-80

DATE PUBLISHED--------70

SUBJECT AREAS--PHYSICS

TOPIC TAGS--RESISTIVITY, SPECIFIC HEAT, DYSPROSIUM, TEMPERATURE DEPENDENCE, NEEL TEMPERATURE

CONTROL MARKING--NO RESTRICTIONS

DOCUMENT CLASS--UNCLASSIFIED

PROXY REEL/FRAME--1987/1968

STEP NO--UR/0181/70/012/003/0774/0780

CIRC ACCESSION NO--AP0105042

UNCLASSIFIED

APPROVED FOR RELEASE: 09/17/2001 CIA-RDP86-00513R002202620003-4"

"APPROVED FOR RELEASE: 09/17/2001 CIA-RDP86-00513R002202620003-4

UNCLASSIFIED PROCESSING DATE--30OCT70

2/2 018

CIRC ACCESSION NO--AP0105042

ABSTRACT/EXTRACT--(U) GP-0- ABSTRACT. MEASUREMENTS WERE CARRIED OUT OF SP. HEAT AND ELECT. RESISTANCE OF DY CLOSE TO THE NEEL POINT. CONSIDERABLE DEVIATIONS EXIST FROM THE EXPECTED PROPORTIONALITY BETWEEN THE MAGNETIC PART OF SP. HEAT AND THE DERIV. OF ELEC. RESISTANCE WITH TEMP. THE TEMPS. CORRESPONDING TO THE EXTREMES OF THE STUDIED PROPERTIES DO NOT COINCIDE. AN ATTEMPT WAS MADE TO DET. THE FORM OF THE FUNCTION WHICH DESCRIBED THE PECULIARITY OF SP. HEAT, WITHOUT THE CHOICE OF THE NEEL POINT. FACILITY: INST. NEORG. KHIM., NOVOSIBIRSK, USSR.

UNCLASSIFIED

APPROVED FOR RELEASE: 09/17/2001 CIA-RDP86-00513R002202620003-4"

"APPROVED FOR RELEASE: 09/17/2001 CIA-RDP86-00513R002202620003-4

1/2 021 UNCLASSIFIED PROCESSING DATE--11SEP70

TITLE--TRUE SPECIFIC HEAT AT LOW TEMPERATURES, ABSOLUTE ENTROPY, AND ENTHALPY OF CESIUM CARBONATE -U-

AUTHOR--PAUKOV, I.YE., RAKHMENKULOV, F.S., LUKYANOVA, I.G.

COUNTRY OF INFO--USSR

SOURCE--ZH. FIZ. KHIM. 1970, 44(1), 256-7

DATE PUBLISHED--------70

SUBJECT AREAS--CHEMISTRY

TOPIC TAGS--ENTROPY, ENTHALPY, CESIUM COMPOUND, CARBONATE, CALORIMETER, SPECIFIC HEAT

CONTROL MARKING--NO RESTRICTIONS

DOCUMENT CLASS--UNCLASSIFIED

PROXY REEL/FRAME--1983/0944 STEP NO--UR/0076/70/044/001/0256/0257

CIRC ACCESSION NO--AP0053868

UNCLASSIFIED

APPROVED FOR RELEASE: 09/17/2001 CIA-RDP86-00513R002202620003-4"

"APPROVED FOR RELEASE: 09/17/2001 CIA-RDP86-00513R002202620003-4

2/2 021

UNCLASSIFIED

CIRC ACCESSION NO--AP0053868 PROCESSING DATE--11SEP70

ABSTRACT/EXTRACT--(U) GP-0- ABSTRACT. THE SP. HEAT OF CS SUB2 CO SUB3 WAS MEASURED IN AN ADIABATIC VACUUM CALORIMETER AT 13-307DEGREESK. AT 20-95DEGREESK, THE SAMPLE COOLING RATE HAS A GREAT INFLUENCE ON THE VALUE OF ITS SP. HEAT.

UNCLASSIFIED

APPROVED FOR RELEASE: 09/17/2001 CIA-RDP86-00513R002202620003-4"

"APPROVED FOR RELEASE: 09/17/2001 CIA-RDP86-00513R002202620003-4

USSR

UDC 621.385.832:621.397.61

RAKHMETULOV, YU. K., STUCHINSKIY, G. B.

"A Television Transmitting Tube with Scanning by a Beam of Slow Electrons"

Moscow, Otkrytiya, Izobreteniya, Promyshlennyye Obraztsy, Tovarnyye Znaki, No 23, 1970, Author's Certificate No 273840, Filed 17 Jan 69, pp 227-228

Abstract: This author's certificate introduces: 1. A television transmitting tube with scanning by a beam of slow electrons. On the inner surface of the inlet aperture of the tube is a target made in the form of a layer of dielectric material with porosity of 90-99 percent and N-type conductivity into the vacuum pores. This layer is located on the signal plate. Also incorporated in the tube is an electron gun. As a distinguishing feature of the patent, the tube is designed to combine high impedance with high sensitivity in the visible, infrared, ultraviolet or x-ray spectral regions. The layer of dielectric material, and especially the part which is turned toward the electron gun, contains at least one additional material which has photoemissivity in the required spectral region. 2. The distinguishing feature of the above tube is that the photoemissive material has a grainy structure. 3. A modification of this tube (No 2) in which the distinguishing feature is that the photoemissive material is made up of grains located

1/2

APPROVED FOR RELEASE: 09/17/2001 CIA-RDP86-00513R002202620003-4"

"APPROVED FOR RELEASE: 09/17/2001 CIA-RDP86-00513R002202620003-4

USSR

RAKHMETULOV, YU. K., et al., Otkrytiya, Izobreteniya, Promyshlennyye Obraztsy, Tovarnyye Znaki, No 23, 1970, Author's Certificate No 273840, Filed 17 Jan 69, pp 227-228

on the surface of the dielectric layer. 4. A modification of this tube (No 2) in which the distinguishing feature is that the grains of photoemissive material are distributed within the body of the layer of dielectric material. 5. A modification of this tube (No 2) in which the distinguishing feature is that the grains of photoemissive material form an interlayer within the layer of dielectric material. 6. A modification of this tube (No 1) in which the distinguishing feature is that the layer of photoemissive material has the structure of thin films. 7. A modification of this tube (No 7) in which the distinguishing feature is that the thin films are located over the surface of the grains of the layer of dielectric material.

2/2

APPROVED FOR RELEASE: 09/17/2001 CIA-RDP86-00513R002202620003-4"

"APPROVED FOR RELEASE: 09/17/2001 CIA-RDP86-00513R002202620003-4

USSR

UDC 616.28-008.177-072.7

RAKHMILEVICH, A. G., Laboratory of Speech Pathology, Central Scientific Research Institute of Legal Psychiatry imeni Serbskiy

"Mechanism of Masking Noise Action on Bone Conduction Thresholds"

Moscow, Vestnik Otorino-Laringologii, No 3, May/Jun 71, pp 26-30

Abstract: In order to elucidate the mechanism by which masking noise applied to one ear reduces bone conduction on the contralateral side, tests were performed on 34 persons (68 ears) with and without a unilateral application of a masking noise, prior to and after administration of central nervous system stimulants (caffeine) and depressants (sodium bromide and chloral hydrate). Bone conduction thresholds were reduced after intake of caffeine and raised after bromide and chloral hydrate. In most cases, the deafening effect of the contralaterally applied masking noise was more pronounced after administration of caffeine and less marked after the sedatives than without the drugs. In a few cases, the threshold shifts were similar or absent. These results indicate that the contralateral effects of a masking noise are regulated mainly by the cerebral cortex but that peripheral mechanisms also exist.

1/1

APPROVED FOR RELEASE: 09/17/2001 CIA-RDP86-00513R002202620003-4"

"APPROVED FOR RELEASE: 09/17/2001 CIA-RDP86-00513R002202620003-4

USSR

UDC 616.28-008.177-072.7

RAKHMILEVICH, A. G., Laboratory of Functional Speech Disorders, Central Scientific Research Institute of Forensic Psychiatry

"Effect of Masking Noise on Thresholds of Bone Conduction"

Moscow, Vestnik Otorinolaringologii, No 6, Nov/Dec 70, pp 67-72

Abstract: Thresholds of bone conduction were investigated in 41 persons (16 with normal hearing, 12 suffering from impairment of sound conduction due to otitis media, and 13 with unilateral or bilateral cochlear neuritis) at frequencies ranging from 125 to 8,000 Hz, with or without the application of white noise of 45 db (the critical level for speech frequencies) and 90 db. The height of the thresholds was found to vary with the intensity of the masking noise and the nature of the hearing disorder. In those with normal hearing, the thresholds of bone conduction rose in the zone of speech frequencies by an average of 5 db (with noise of 45 db) or 14 db (with noise of 90 db). In those with impairment of sound conduction, the thresholds rose by 3 and 8 db, respectively. The thresholds were highest in those with perceptive hardness of hearing. The differences in the increase in thresholds of bond conduction may be of value in determining the nature of a hearing disorder.

1/1

APPROVED FOR RELEASE: 09/17/2001 CIA-RDP86-00513R002202620003-4"

"APPROVED FOR RELEASE: 09/17/2001 CIA-RDP86-00513R002202620003-4

Acc. Nr AP0029108

Ref. Code: UR 0246

PRIMARY SOURCE: Zhurnal Nevropatologii i Psikhiatrii, 1970, Vol 70, Nr 1, pp 97-101

CONCERNING ACUTE ALCOHOLIC HALLUCINOSIS, PROCEEDING WITH DELUSIONS OF JEALOUSY

Gulyamov, M. G.; Rakhminov, B. Yu.

The report deals with one of the varieties of acute alcoholic hallucinosis, the main feature of which is delusional jealousy. The acutely appearing delusional ideas of jealousy, stem out in these cases from hallucinations with an erotic character. The psychosis with such hallucinatory—paranoid symptomatology is transient and there is a full favorable outcome from the psychotic condition. The appearance of delusions of jealousy in acute alcoholic hallucinosis does not predict a more severe course of the psychosis and is not a prognostically unfavorable sign.

1/1

REEL/FRAME
19680619

2 MB

APPROVED FOR RELEASE: 09/17/2001 CIA-RDP86-00513R002202620003-4"

"APPROVED FOR RELEASE: 09/17/2001 CIA-RDP86-00513R002202620003-4

USSR

BERING, B. P., RAKHMUKOV, B. Kh., and SERPINSLIY, V. V., Institute of Physical Chemistry, Academy of Sciences USSR

UDC 541.183

"Experimental Determination of Specific Adsorption and Its Temperature Dependence"

Moscow, Izvestiya Akademii Nauk SSSR, Seriya Khimicheskaya, Vol 12, Dec 73, pp 2798-2801

Abstract: A method was developed for the determination of specific adsorption and its temperature dependence based on dilatometric measurements of the adsorption system zeolite-liquid adsorptive. Specific adsorption and the temperature coefficient have been determined for the system n-pentane-NaX zeolite in the temperature range 30-150°. The temperature coefficient calculated by the method of Nikolayev-Dubinina agreed well with the experimentally determined value.

APPROVED FOR RELEASE: 09/17/2001 CIA-RDP86-00513R002202620003-4"

"APPROVED FOR RELEASE: 09/17/2001 CIA-RDP86-00513R002202620003-4

USSR

UDC: 621.396.61

RAKHOVICH, L. M., TAN'KO, A. V.

"On One Possibility of Indirect Synchronization in Multichannel Systems"

V sb. Vopr. elektrosvyazi (Problems of Electrical Communications--collection of works), Kiev, "Tekhnika", 1970, pp 39-42 (from RZh-Radiotekhnika, No 11, Nov 70, Abstract No 11A60)

Translation: Conventional methods of producing tuning signals for synchronizing the transmitter and receiver in multichannel systems with phase difference keying may lead to appreciable errors in determining the boundaries of pulse trains where there is selective fading and concentrated interference in the channels. In this connection, the authors discuss a method of synchronizing the boundaries of pulse trains for a system with orthogonal carrier oscillations which are odd harmonics of the fundamental frequency. This method is based on comparison of two signal readings taken on the interval of orthogonality. A block diagram of a synchronizing unit is given. One illustration, bibliography of one title. N. S.

1/1

APPROVED FOR RELEASE: 09/17/2001 CIA-RDP86-00513R002202620003-4"

"APPROVED FOR RELEASE: 09/17/2001 CIA-RDP86-00513R002202620003-4

UNCLASSIFIED

TITLE--DYNAMICS OF A CHANGE IN THE ELECTRON CURRENT FRACTION IN THE CATHODE REGION OF AN ARC DISCHARGE -U-

PROCESSING DATE--13NOV70

AUTHOR-(03)-BEYLIS, I.I., LYUBIMOV, G.A., RAKHOVSKIY, V.I.

COUNTRY OF INFO--USSR

SOURCE--DOKL. AKAD. NAUK SSSR 1970, 191(2), 307-10

DATE PUBLISHED-------70

SUBJECT AREAS--PHYSICS

TOPIC TAGS--ARC DISCHARGE, ION CURRENT, ION MOBILITY, CATHODE, ELECTRODE PROPERTY, THERMIONIC EMISSION, METAL HEATING

CONTROL MARKING--NO RESTRICTIONS

DOCUMENT CLASS--UNCLASSIFIED

PROXY REEL/FRAME--3005/1642

STEP NO--UR/0020/70/191/002/0307/0310

CIRC ACCESSION NO--AT0133547

UNCLASSIFIED

APPROVED FOR RELEASE: 09/17/2001 CIA-RDP86-00513R002202620003-4"

"APPROVED FOR RELEASE: 09/17/2001 CIA-RDP86-00513R002202620003-4

2/2 030 UNCLASSIFIED

CIRC ACCESSION NO--AT0133547 PROCESSING DATE--13NOV70

ABSTRACT/EXTRACT--(U) GP-0- ABSTRACT. THE UNSTEADY STATE PROBLEM OF THE DEVELOPMENT OF A CATHODE SPOT IS SOLVED BY USING THE MODEL SUGGESTED EARLIER (1969), IN WHICH THE IONIC CURRENT IS DETD. MAINLY BY THE DIFFUSION OF IONS WHICH ENTER FROM THE REGION OF IONIZATION. THUS, THE UNSTEADY STATE CHANGE IN THE FRACTION OF THE IONIC CURRENT IS DETD. BY SOLVING THE UNSTEADY STATE DIFFUSION EQUATION FOR THE CONDITIONS THAT THERE IS A SOURCE OF IONS WHICH RESULTS FROM THE IONIZATION OF NEUTRAL ATOMS BY ELECTRONS EMITTED FROM THE CATHODE. THE CALCNS. SHOW THAT THE THERMAL FIELD EMISSION ELECTRON SPOT CAN EXIST ON A HEATED SURFACE ONLY FOR A LOW VALUE OF THE ELECTRON CURRENT FRACTION (0.5-0.7), BECAUSE A HIGH SURFACE TEMP. CAN BE MAINTAINED ONLY BY THE IONIC COMPONENT OF THE CURRENT. FACILITY: NAUCH-ISSLED. INST. MEKH., MOSK. GOS. UNIV. IM. LOMONOSOVA, MOSCOW, USSR.

UNCLASSIFIED

APPROVED FOR RELEASE: 09/17/2001 CIA-RDP86-00513R002202620003-4"

"APPROVED FOR RELEASE: 09/17/2001 CIA-RDP86-00513R002202620003-4

1/2 018

UNCLASSIFIED

TITLE--CURRENT DENSITY IN A CATHODE SPOT OF AN ARC DISCHARGE -U-

PROCESSING DATE--20NOV70

AUTHOR--RAKHOVSKIY, V.I.

R

COUNTRY OF INFO--USSR

SOURCE--TEPLOFIZ. VYS. TEMP. 1970, 8(1), 29-32

DATE PUBLISHED-------70

SUBJECT AREAS--PHYSICS, ELECTRONICS AND ELECTRICAL ENGR.

TOPIC TAGS--CURRENT DENSITY, CATHODE, ARC DISCHARGE, COPPER

CONTROL MARKING--NO RESTRICTIONS

DOCUMENT CLASS--UNCLASSIFIED

PROXY REEL/FRAME--1998/0552

STEP NO--UR/0294/70/008/001/0029/0032

CIRC ACCESSION NO--AP0121224

UNCLASSIFIED

APPROVED FOR RELEASE: 09/17/2001 CIA-RDP86-00513R002202620003-4"

"APPROVED FOR RELEASE: 09/17/2001 CIA-RDP86-00513R002202620003-4

2/2 018

UNCLASSIFIED

CIRC ACCESSION NO--AP0121224 PROCESSING DATE--20NOV70

ABSTRACT/EXTRACT--(U) GP-0- ABSTRACT. AN ESTN. OF THE ELECTRON C.D. (J SUBE) WAS CARRIED OUT BASED ON THE THEORETICAL MODEL IN WHICH ANY ELECTRON CAN TAKE PART IN A SINGLE IONIZATION ACT ONLY. IN THE CASE OF A DIRECT IONIZATION IN THE ARC DISCHARGE ON A CU CATHODE AN EXPRESSION IS VALID JS UBE LESS THAN (SIGMA SUBI E-4.53 SIGMA SUBI SEXTILE SIGMA SEXTILE) LAMBDA PRIME NEGATIVE2, WHERE SIGMA SUBI, SIGMA SUBI SEXTILE, AND SIGMA SEXTILE ARE THE CROSS SECTIONS OF THE IONIZATION OF A NEUTRAL ATOM, OF THE PROGRESSIVE ONIZATION, AND OF THE EXCITATION, RESP., LABMDA IS THE WAVELENGTH OF THE TRANSITION FROM THE EXCITED STATE TO THE NONEXCITED STATE, AND E IS THE ELECTRON CHARGE. BY USING EXPTL. DATA PUBLISHED, THIS EXPRESSION GIVES J SUBE LESS THAN OR EQUAL TO 10 PRIME6 A-CM PRIME2 FOR THE CU ARC DISCHARGE.

FACILITY: INST. VYS. TEMP., MCSCOW, USSR.

UNCLASSIFIED

APPROVED FOR RELEASE: 09/17/2001 CIA-RDP86-00513R002202620003-4"

"APPROVED FOR RELEASE: 09/17/2001 CIA-RDP86-00513R002202620003-4

USSR

RAKHSHTADT, A.G., Professor D-r of Techn. Sciences. ROD'KINA, T.A., Aspirant
(Moscow Higher Technical School imeni N.E. Bauman)

UDC 669.01

"Effect of Surface Processing on Elastic Properties of 35KhGSA Steel"

Moscow, Izvestiya Vysshikh Uchebnykh Zavedeniy, Mashinostroyeniye, No 6, 1970, pp 143-148

Abstract: The effect of surface processing, such as electrolytic polishing, galvanic coating, corrosion and chemical etching on elastic properties of 35KhGSA steel was evaluated by measuring the resistance to microplastic deformations on which depend such properties of imperfect elasticity as hysteresis and elastic effect, which determine the quality of an elastic element. The preparation of samples and experimental techniques are described. The results presented in graphical form show that electrolytic polishing or chemical etching of steel after heat treatment and mechanical removal of a 10- to 20-micron layer, significantly increases the resistance to microplastic deformations (elastic strength). Cadmium coating on heat treated steel after mechanical processing reduces the resistance to microplastic deformations. The corrosion process in a 3% NaCl solution increases the elastic strength through the removal of surface layer with increased density of substructure defects, while the corrosion of samples after cadmium plating

1/2

APPROVED FOR RELEASE: 09/17/2001 CIA-RDP86-00513R002202620003-4"

"APPROVED FOR RELEASE: 09/17/2001 CIA-RDP86-00513R002202620003-4

USSR

RAKHSHTADT, A.G., et al, Izvestiya Vysshikh Uchebnykh Zavedeniy, Mashinostroyeniye, No 6, 1970, pp 143-148

reeuces the elastic strength. It was established that cadmium plating does not provide an efficient protection for 35KhGSA steel against corrosion in a 3% NaCl solution, since tests conducted in this solution disclose a strong reduction in resistance to microplastic deformations.

2/2

APPROVED FOR RELEASE: 09/17/2001 CIA-RDP86-00513R002202620003-4"

"APPROVED FOR RELEASE: 09/17/2001 CIA-RDP86-00513R002202620003-4

USSR

AKIMOVA, A. YU., RAKHSHTADT, A. G., ARZAMASOVA, V. S.

UDC 669.15.018.44

"High-Temperature Thermomechanical Working of Stainless Dispersion-Hardening Steels"

Povysh. konstruktivn. prochnosti staley i splavov. No 2 -- V sb. (Improving the Structural Strength of Steels and Alloys. No 2 -- collection of works), Moscow, 1970, pp 177-180 (from RZh-Metallurgiya, No 4, Apr 71, Abstract No 4I652)

Translation: The effect of high-temperature thermomechanical working and subsequent aging on $\sigma_{0.002}$ of stainless dispersion-hardening Cr-Ni steel of austenitic-martensitic class type 17-7 additionally alloyed with Al, Mo, or Ti and stainless martensitic-aging 12 Cr-10 Co steel with a high W content (6-8%) or Mo content (6%) was studied. High-temperature thermomechanical working of Cr-Ni steel not only increases $\sigma_{0.002}$ but also the resistance to stress relief during prolonged aging. The highest $\sigma_{0.002}$ was obtained in Kh17N7T steel (0.9% Ti). The value of $\sigma_{0.002}$ is 150 kg/mm^2 after high-temperature thermomechanical working (reduction of area 50%), cold working at

1/2

APPROVED FOR RELEASE: 09/17/2001 CIA-RDP86-00513R002202620003-4"

"APPROVED FOR RELEASE: 09/17/2001 CIA-RDP86-00513R002202620003-4

USSR

AKIMOVA, A. YU., et al., Povsh. konstruktivn. prochnosti staley i splavov. No 2, Moscow, 1970, pp 177-180

-70°, 2 hours, and aging at 450°, 4 hours; $\sigma_{0.002}$ of the same steel is 110-115 kg/mm^2 after ordinary quenching, cold working, and aging. A sharp increase in $\sigma_{0.002}$ was observed for martensitic aging steel immediately after high-temperature thermomechanical working (25% reduction at 1,050°). However, the increase in $\sigma_{0.002}$ after aging steel subjected to high-temperature thermomechanical treatment does not exceed 4-6 kg/mm^2. There are 2 illustrations and a 2-entry bibliography.

2/2

APPROVED FOR RELEASE: 09/17/2001 CIA-RDP86-00513R002202620003-4"

"APPROVED FOR RELEASE: 09/17/2001 CIA-RDP86-00513R002202620003-4

036

UNCLASSIFIED

TITLE--INVESTIGATION OF THE HYDRAULIC EROSION RESISTANCE OF HIGH STRENGTH CHROME MANGANISE SILICON STEELS -U-

PROCESSING DATE--30OCT70

AUTHOR-(05)-CHELYSHEVA, A.A., PROKOSHKIN, D.A., RAKHSHTADT, A.G., GUREVICH, YA.B., FOMIN, V.V.

COUNTRY OF INFO--USSR

R

SOURCE--MOSCOW, IZVESTIYA VYSSHIKH UCHEBNYKH ZAVEDENIY, MASHINOSTROYENIYE, NO. 1, 1970, PP 117-122

DATE PUBLISHED--------70

SUBJECT AREAS--MATERIALS

TOPIC TAGS--CHROMIUM MANGANESE STEEL, SILICON STEEL, STEEL HEAT TREATMENT, STEEL HARDENING, CAVITATION/(U)50KH3G6S HIGH ALLOY STEEL, (U)40KH3G6S STEEL, (U)25KH1468T STEEL

CONTROL MARKING--NO RESTRICTIONS

DOCUMENT CLASS--UNCLASSIFIED

PROXY REEL/FRAME--2000/0028

STEP NO--UR/0145/70/000/001/0117/0122

CIRC ACCESSION NO--AT0123820

UNCLASSIFIED

APPROVED FOR RELEASE: 09/17/2001 CIA-RDP86-00513R002202620003-4"

"APPROVED FOR RELEASE: 09/17/2001 CIA-RDP86-00513R002202620003-4

2/3 036

CIRC ACCESSION NO--AT0123820 UNCLASSIFIED

PROCESSING DATE--30OCT70

ABSTRACT/EXTRACT--(U) GP-0- ABSTRACT. THE EFFECTS OF HEAT TREATMENT AND THERMOMECHANICAL WORKING OF HIGH ALLOY CHROME MANGANISE SILICON STEELS (40KH3G6S AND 50KH3G6S) ON THE HYDRAULIC EROSION RESISTANCE OF THE STEELS IS EXAMINED, USING TWO TEST MELTS CONTAINING 0.38PERCENT C, 1.5PERCENT SI, 6.3PERCENT MN, 3.0PERCENT CR, 0.015PERCENT S, AND 0.001PERCENT P IN ONE MELT AND 0.50PERCENT C, 1.5PERCENT SI, 6.3PERCENT MN, 3.0PERCENT CR, 0.013PERCENT S, AND 0.004PERCENT P IN THE OTHER. CLEANED 40 KG INGOTS WERE FORGED AND HOT ROLLED INTO 20 TIMES 14 MM SHEET BILLETS, 7 MM THICK. HIGH TEMPERATURE THERMOMECHANICAL WORKING WAS PERFORMED AT 900DEGREESC WITH A 50PERCENT REDUCTION IN ONE ROLL PASS AND SUBSEQUENT HARDENING IN OIL AND AUSTENIZING IN 30 MINUTES. LOW TEMPERATURE THERMOMECHANICAL WORKING WAS PERFORMED AFTER A 30 MINUTE HOLD AT 900DEGREESC FOLLOWED BY FURNACE COOLING TO 500DEGREESC AND 2, 4 ROLL PASSES FOR A TOTAL REDUCTION OF 70-75PERCENT. FOLLOWING HARDENING AND WORKING, A NUMBER OF THE BLANKS WERE COLD WORKED AT MINUS 20DEGREESC, MINUS 35DEGREESC, AND MINUS 196DEGREESC TO OBTAIN A DIFFERENT AMOUNT OF MARTENSITE AND RESIDUAL AUSTENITE. SAMPLES OF THE ABOVE WERE SUBJECTED TO A 100 M-SEC WATER JET FROM A 5 MM NOZZLE. IT IS CONCLUDED THAT COLD WORKING, CAUSING TRANSFORMATION OF RESIDUAL AUSTENITE INTO MARTENSITE INCREASES THE YIELD POINT OF 40KH3G6S STEEL FROM 67 KG-MM PRIME2 TO 140 KG-MM PRIME2 AFTER HARDENING, WITH A SLIGHT INCREASE IN ULTIMATE STRENGTH. HYDRAULIC EROSION TESTS WITH THE TWO STEELS SHOWED THAT THEY HAVE GREATER RESISTANCE TO JET IMPINGEMENT EROSION THAN 25KH14G8T CAVITATION RESISTANT STEEL.

UNCLASSIFIED

APPROVED FOR RELEASE: 09/17/2001 CIA-RDP86-00513R002202620003-4"

"APPROVED FOR RELEASE: 09/17/2001 CIA-RDP86-00513R002202620003-4

036

CIRC ACCESSION NO--AT0123820 UNCLASSIFIED PROCESSING DATE--30OCT70

ABSTRACT/EXTRACT--A NUMBER OF OTHER CONCLUSIONS REGARDING THESE STEELS ARE GIVEN, AND THE HIGH AND LOW TEMPERATURE WORKING PROCEDURES DESCRIBED IN THE ARTICLE ARE RECOMMENDED FOR PRODUCING STEELS FOR OPERATION UNDER SEVERE CAVITATION CONDITIONS WHERE THE CORROSION FACTOR IS OF LESSER IMPORTANCE.

E. BAUMAN. FACILITY: MOSCOW HIGHER TECHNICAL SCHOOL IMENI N.

UNCLASSIFIED

APPROVED FOR RELEASE: 09/17/2001 CIA-RDP86-00513R002202620003-4"

"APPROVED FOR RELEASE: 09/17/2001 CIA-RDP86-00513R002202620003-4

USSR

UDC 669.3.539.4

GORLENKO, N. P., RAKHSHTADT, A. G., and ROZENBERG, V. M., Giprotsvetmetobrabotka, Moscow

"Effect of Deformation Temperature and Grain Size on the Work Hardening of a Copper-Aluminum Alloy During Prerecrystallization Annealing"

Sverdlovsk, Fizika Metallov i Metallovedeniye, Vol 29, No 5, May 70, pp 1098-1099

Abstract: A copper-aluminum alloy (15 at % Al), characterized by low energy of packing defects (ν = 2-4 erg/cm^2), was used in a study of the effect of grain size and deformation temperature on the work hardening immediately during deformation and after annealing. The alloy, which was smelted in a vacuum furnace, was subjected to hot and cold rolling. The difference in grain size (60 and 200 micron) was obtained after rolling deformation of the strip to a thickness of 0.5 mm and annealing at 650 and 850°C. The temperature of deformation was 20 and -196°C, and the degree of deformation 50%. The results obtained showed that the decrease in grain size from 200 to 60 micron had no effect on the plastic limit of the alloy deformed at 20°, but increased it considerably after annealing in the 250-275° temperature range. Lowering of the rolling temperature from 20 to -196° increased the plastic limit of the alloy in the deformed state, particularly after prerecrystallization annealing. The range of annealing temperatures, which corresponds to a maximum increase of the plastic limit, was reduced to 220-240°.

1/1

APPROVED FOR RELEASE: 09/17/2001 CIA-RDP86-00513R002202620003-4"

"APPROVED FOR RELEASE: 09/17/2001 CIA-RDP86-00513R002202620003-4

1/3 020 UNCLASSIFIED PROCESSING DATE--11SEP70

TITLE--STRUCTURE AND PROPERTIES OF BERYLLIUM BRONZE MICROALLOYED WITH MAGNESIUM -U-

AUTHOR--TKHAGAPSOYEV, KH.G., RAKHSHTADT, A.G., PASTUKHOVA, ZH.P., KARPOV, A.G.

COUNTRY OF INFO--USSR

SOURCE--METALLOVED. TERM. OBRAB. METAL. 1970, (2), 19-24

DATE PUBLISHED--------70

SUBJECT AREAS--MATERIALS

TOPIC TAGS--BRONZE, BERYLLIUM CONTAINING ALLOY, MAGNESIUM CONTAINING ALLOY, ALLOY DESIGNATION, X RAY ANALYSIS, ELECTRIC RESISTANCE, MECHANICAL PROPERTY/(U)B2 BERYLLIUM BRONZE, (U)BNT19 BERYLLIUM BRONZE

CONTROL MARKING--NO RESTRICTIONS

DOCUMENT CLASS--UNCLASSIFIED

PROXY REEL/FRAME--1988/1297 STEP NO--UR/0129/70/000/002/0019/0024

CIRC ACCESSION NO--AP0106077

UNCLASSIFIED

APPROVED FOR RELEASE: 09/17/2001 CIA-RDP86-00513R002202620003-4"

"APPROVED FOR RELEASE: 09/17/2001 CIA-RDP86-00513R002202620003-4

2/3 020 UNCLASSIFIED

CIRC ACCESSION NO--AP0106077 PROCESSING DATE--11SEP70

ABSTRACT/EXTRACT--(U) GP-0- ABSTRACT. THE COLD ROLLED B2 AND BNTL.9 BE BRONZES CONTG. MG 0.05-0.10, AND P 0.02-0.1PERCENT (B2 BRONZE ONLY), AND THOSE WITHOUT MG AND P WERE QUENCHED FROM 780-820DEGREES AND AGED AT 280-360DEGREES FOR 0.5-10 HR. DISTRIBUTION OF TI, NI, AND MG WAS DETD. BY THE X RAY ANAL., AND THE AGING KINETICS WAS STUDIED BY DETG. CHANGES OF HARDNESS, ELASTIC LIMIT SIGMA SUB0.002, AND ELEC. RESISTANCE. THE RELAXATION STABILITY WAS DETD. BY THE LONGITUDINAL BEND TESTS AT 10 PRIME4 CYCLES, 65 AND 45 KG-MM PRIME2, AND UNDER STATIC LOAD OF 55 KG-MM PRIME2 AT 20 AND 100DEGREES, FOR 3500 AND 150 HR, RESP. ADDN. OF MG SMALLER THAN OR EQUAL TO 0.1PERCENT SIGNIFICANTLY IMPROVES MECH. PROPERTIES OF BRONZES. THE SIGMA SUB0.002 INCREASED FROM 58-63 FOR BRONZE WITHOUT MG TO 73-8 KG-MM PRIME2 FOR THE ONE CONTG. MG, THE FINAL DEFORMATION DEGREE AFTER 10 PRIME4 CYCLES DECREASED FROM (5-6.3) TIMES 10 PRIME NEGATIVE3 TO (2.5-2.6) TIMES 10 PRIME NEGATIVE3PERCENT AT 65 KG-MM PRIME2, AND FROM (1.72-2.9) TIMES 10 PRIME NEGATIVE3 TO (1.17-1.4) TIMES 10 PRIME NEGATIVE3PERCENT AT 45 KG-MM PRIME2, AND THAT UNDER THE STATIC STRESS OF 55 KG-MM PRIME2 DECREASED FROM (4.8-5.65) TIMES 10 PRIME NEGATIVE3 TO (2.34-2.42) TIMES 10 PRIME NEGATIVE3PERCENT AT 20DEGREES, 3500 HR, AND FROM 8 TIMES 10 PRIME NEGATIVE3 TO 4.2 TIMES 10 PRIME NEGATIVE3PERCENT AT 100DEGREES, 150 HR. MG INCREASES DISPERSITY AND HOMOGENEITY OF THE BRONZE STRUCTURE. THE MEAN ALPHA SOLID SOLN. GRAIN DIAM., MEASURED AFTER 15 MIN OF HEATING AT 720-820DEGREES AND QUENCHING, DECREASED FROM 0.03 TO 0.025 MM AT 720DEGREES AND FROM SIMILAR TO (0.08-0.09) TO SIMILAR TO (0.065-0.07) MM AT 820DEGREES.

UNCLASSIFIED

APPROVED FOR RELEASE: 09/17/2001 CIA-RDP86-00513R002202620003-4"

"APPROVED FOR RELEASE: 09/17/2001 CIA-RDP86-00513R002202620003-4

373 020

UNCLASSIFIED

CIRC ACCESSION NO--AP0106077 PROCESSING DATE--11SEP70

ABSTRACT/EXTRACT--THESE EFFECTS ARE ATTRIBUTED TO THE ADSORPTION OF MG ON THE INTERPHASE SURFACES AND AT THE GRAIN BOUNDARIES. NO CHANGES OF ELEC. RESISTANCE AND NEGLIGIBLE ONES OF HARDNESS WERE OBSD. FURTHERMORE, IT WAS CALCD. THAT P INCREASES THE AGING ACTIVATION ENERGY OF THE B2 BRONZE AT 280-360DEGREES FROM 24-6 TO 32-5 KCAL-MOLE. P ATOMS FORM COMPLEXES WITH VACANCIES AND DIMINISH THEIR MOBILITY. THE QUENCHING FROM 770DEGREES AND AGING AT 320DEGREES FOR 6 HR IS RECOMMENDED AS THE OPTIMUM HEAT TREATMENT OF THE BNT1.9 AND B2 BRONZES - CONTG. MG. J. PIETKIEWICZ.

UNCLASSIFIED

APPROVED FOR RELEASE: 09/17/2001 CIA-RDP86-00513R002202620003-4"

"APPROVED FOR RELEASE: 09/17/2001 CIA-RDP86-00513R002202620003-4

USSR

UDC 669.140

CHELYSHEVA, A. A. (Aspirant), PROKOSHKIN, D. A. (Doctor of Technical Sciences, Professor), RAKHSHTADT, A. G. (Doctor of Technical Sciences, Professor), FOMIN, V. V. (Doctor of Technical Sciences), GUREVICH, YA. B. (Candidate of Technical Sciences), MILYAKOV, A. P. (Engineer), and MARININ, A. A. (Candidate of Technical Sciences), Moscow Higher Technical School imeni N. E. Bauman

"Study of Hydroerosion Resistance of High Strength Chromium-Manganese-Silicon Steels"

Moscow, IVUZ Mashinostroyeniye, No 1, Jan 70, pp 117-122

Abstract: The article presents the study of properties of steels 40Kh3G6S and 50Kh3G6S after heat and heat-mechanical treatment. It is shown that the steels, after ordinary hardening, high-temperature heat-mechanical treatment (VTMO) and low-temperature heat-mechanical treatment (NTMO) plus low-temperature tempering possess a reduced value of yield point at high value of tensile strength. The low yield point is explained by the presence of a considerable quantity of residual austenite. In the process of deformation during determination of the tensile strength the residual austenite apparently is transformed into martensite and therefore the tensile strength reaches high values. The use of sub-zero treatment, which induces the transformation

1/2

APPROVED FOR RELEASE: 09/17/2001 CIA-RDP86-00513R002202620003-4"

"APPROVED FOR RELEASE: 09/17/2001 CIA-RDP86-00513R002202620003-4

USSR

CHELYSHEVA, A. A., et al., IVUZ Mashinostroyeniye, No 1, Jan 70, pp 117-122

of residual austenite into martensite, considerably increases the yield point from 67 kg/mm^2 to 140 kg/mm^2 after hardening in steel 40Kh3G6S with a small increase in the tensile strength. The comparison of mechanical properties of studied steels after hardening, VTMO, NTMO and low temperature tempering at equal quantity of residual austenite shows that heat-mechanical treatment, particularly NTMO, increases the strength properties of steels. Hydroerosion tests show that steels 40Kh3G6S and 50Kh3G6S possess a considerably high resistivity to jet-impact erosion. At that, the difference between resistance after hardening and low temperature tempering and hardening, sub-zero treatment and low temperature tempering is insignificant regardless of the fact that in the latter case the quantity of martensite is much higher. It is shown that the deformation of steels 40Kh3G6S and 50Kh3G6S under VTMO and particularly under NTMO increases the quantity of residual austenite as compared to ordinary hardening. This is due to lowered transformability of supercooled and deformed austenite into martensite. Likewise, the resistance to jet-impact erosion of these steels significantly increased after VTMO but particularly after NTMO, as compared to ordinary hardening and tempering. This increase in the resistance to hydroerosion due to VTMO and NTMO is traced to high degree of work hardening of austenite obtained as a result of deformation during VTMO and NTMO and to its partial transformation into martensite.

2/2

APPROVED FOR RELEASE: 09/17/2001 CIA-RDP86-00513R002202620003-4"

"APPROVED FOR RELEASE: 09/17/2001 CIA-RDP86-00513R002202620003-4

Miscellaneous

USSR

UDC: 537.529:536.422:537.528

KOROTKOV, V. A., NESVETAYLOV, G. A., RAKHUBA, V. K., Minsk

"On Optimizing the Electrical Explosion of Wires"

Kishinev, Elektronnaya Obrabotka Materialov, No 3(45), 1972, pp 35-37

Abstract: The authors study and generalize experimental material on optimizing the electrical explosion of copper wires in water and air. Formulas are derived for determining the optimum wire diameter over a broad range of discharge circuit parameters. A nomogram is constructed for finding the optimum diameter of a copper wire exploded in water. The authors thank A. P. Klimkovich for assistance in doing the experiments.

1/1

APPROVED FOR RELEASE: 09/17/2001 CIA-RDP86-00513R002202620003-4"

"APPROVED FOR RELEASE: 09/17/2001 CIA-RDP86-00513R002202620003-4

USSR

UDC 541.127.4

KHROMOVA, N. P., LEGENCHENKO, I. A., and RAKHUBENKO, Institute of General and Inorganic Chemistry, Ukrainian Academy of Sciences (Laboratories in Odessa)

"Exchange Equilibrium Between Anions of the Ethylene Diamine Tetraacetate Complexes of the Rare Earth Elements, and Chlorine Anions in a Solution - Anionite AV-21 and AN-261 System"

Kiev, Ukrainskiy Khimicheskiy Zhurnal, Vol XXXVII, No 8, 1971, pp 838-839

Abstract: Sorption equilibrium of EDT complexes of La, Nd, Gd, and Er on the Soviet-developed AV-21 and AN-261 in chloride form was studied, by the method developed earlier by the authors.

Weights of the ionite ww were varied from 0.25 to 5.0 g, solution concentration from $4 \cdot 10^{-3}$ to $16 \cdot 10^{-3}$ mol.

Both ionites showed nonequivalent exchange, which was more pronounced than for AV-17. The low-base AN-261 ionite was strongly hydrolyzed during the tests; attempts to raise the pH to 4 led to a sharp drop in sorption capacity, and dislocation of equivalence exceeded the equivalent sorption of the rare-earth complexes. For both ion-exchangers, the degree of non-equivalence varied, depending on solution pH. In neither case did variation in sorption equilbrium obey the mass-action law. Empirical formula and graphs are included in the paper. 1/1

APPROVED FOR RELEASE: 09/17/2001 CIA-RDP86-00513R002202620003-4"

"APPROVED FOR RELEASE: 09/17/2001 CIA-RDP86-00513R002202620003-4

USSR

UDC 591.31:593.9:615.78.019-092

BUZNIKOV, G. A., RAKICH, L., and TURPAYEV, T. M., Laboratory of Physiology imeni Kh. S. Koshtoyants, Institute of Developmental Biology, Academy of Sciences USSR, Moscow and Laboratory for Brain Study, Institute for Biological Research, Belgrade

"Supersensitivity of Early Embryos of the Sea Urchin Arbacia Lixula to Neuropharmacological Agents"

Leningrad, Zhurnal Evolyutsionnoy Biokhimii i Fiziologii, No 5, 1972, pp 478-485

Abstract: The early embryos of A. lixula were found to be 10 to 800 times more sensitive to 53 neuropharmacological agents (serotonin antagonists, adrenolytics, and cholinolytics) than the early embryos of 5 other sea urchin species (Strongylocentrotus drobachiensis, S. nudus, S. intermedius, Paracentrotus lividus, and Sphaerechinus granularis). On the other hand, A. lixula embryos did not exhibit supersensitivity to 19 other kinds of agents that block development, i.e., detergents, chelating compounds, mitotic and metabolic poisons, and inhibitors of macromolecular synthesis, except to the antibiotic antimycin A. Both supersensitivity and ordinary sensitivity to the neuropharmacological

1/2

APPROVED FOR RELEASE: 09/17/2001 CIA-RDP86-00513R002202620003-4"

"APPROVED FOR RELEASE: 09/17/2001 CIA-RDP86-00513R002202620003-4

USSR

BUZNIKOV, G. A., et al., Zhurnal Evolyutsionnoy Biokhimii i Fiziologii, No 5, 1972, pp 478-485

drugs decreased in A lixula when the eggs were treated with endogenous antidotes (e.g., 1-benzyl-2,5-dimethylserotonin) or exogenous mediators (acetylcholine and monoamines). The hyperactive drugs apparently block early embryonic development by antagonizing the mediators.

2/2

APPROVED FOR RELEASE: 09/17/2001 CIA-RDP86-00513R002202620003-4"

"APPROVED FOR RELEASE: 09/17/2001 CIA-RDP86-00513R002202620003-4

USSR

UDC 537.312.62

BUYNOV, N. N., VOZILKIN, V. A., and RAKIN, V. G., Institute of Metal Physics, Academy of Sciences USSR

"Study of the Structure of 65BT Superconducting Alloy

Sverdlovsk, Fizika Metallov i Metallovedeniye, Vol 29, No 5, May 70, pp 1005-1009

Abstract: Using X-ray micrographic and electron microscopic methods, a study was made of the structure of the 65BT superconducting alloy after different regimes of heat treatment for the purpose of establishing a relationship between the structure and superconducting characteristics. The alloy was studied after the following regimes of treatment: water quenching from 1250°; tempering at 300, 500, 600, 700, 800, and 880° for 30 min; and tempering at 600° for 45 hrs, 700° for 2 hrs, 800° for 6 hrs, and 880° for 20 hrs. Decomposition took place in the alloy during heating in the temperature 300-880° range, which is followed by high refining of a certain volume of the solid solution. At tempering temperatures above 900° C, no decomposition was observed. The separated particles, upon attaining the size of 0.1 micron, become the source of dislocations. The authors thank L. N. Fedotov (TsNIICHM) for the alloy and S. V. Sudareva for help with the work.

1/1

APPROVED FOR RELEASE: 09/17/2001 CIA-RDP86-00513R002202620003-4"

"APPROVED FOR RELEASE: 09/17/2001 CIA-RDP86-00513R002202620003-4

Concrete

USSR

UDC: 66.043.2

PIROGOV, A. A., YUTINA, A. S., RAKINA, V. P. and VOLKOV, N. V., Ukrainian Scientific Research Institute of Refractories

"Heat-Insulating Light-Weight Concretes"

Moscow, Ogneupory, No 4, Apr 72, pp 6-10

Abstract: A review is presented of the basic methods of producing heat-insulating light-weight concretes developed in recent years at the Ukrainian Scientific Research Institute of Refractories for service at temperatures from 1000 to 1400°C. Most extensive use has been made of heat-insulating concretes with various porous fillers, including porous corundum, porous alumina, kaolin, foamed chamotte, distended vermiculite, keramsit, agloporite, perlite, and granulated slags. The binders include alumina and Portland cements, liquid glass, orthophosphoric acid, and phosphates. Both the fillers and binders appear to be governing the fire properties of the heat-insulating concretes. The characteristics of high-alumina and aluminosilicate concretes and concretes with combined fillers, types of filler and binders, apparent densities, compressive strengths, heat

1/2

APPROVED FOR RELEASE: 09/17/2001 CIA-RDP86-00513R002202620003-4"

"APPROVED FOR RELEASE: 09/17/2001 CIA-RDP86-00513R002202620003-4

USSR

PIROGOV, A. A., et al, Ogneupory, No 4, Apr 72, pp 6-10

conductance, and tentative service temperature are detailed in a table. Future trends point to more effective methods of producing special porous granulated fillers using distention and foaming. (2 illustrations, 1 table, 16 bibliographic references).

2/2

APPROVED FOR RELEASE: 09/17/2001 CIA-RDP86-00513R002202620003-4"

"APPROVED FOR RELEASE: 09/17/2001 CIA-RDP86-00513R002202620003-4

Entomology

USSR

UDC 611.89-086-019:577.153.9

RAKITIN, A. A., Biophysics Laboratory, Institute of Plant Protection, All-Union Academy of Agricultural Sciences imeni V. I. Lenin, Leningrad

"Nature of the Distribution of Cholinesterase Activity in Ganglia of the Insect Central Nervous System Under Normal Conditions and After Inhibition by Insecticides"

Leningrad, Arkhiv Anatomii, Gistologii i Embriologii, Vol 59, No 9, Sep 70, pp 63-69

Abstract: Photometry was used to study the distribution of cholinesterase activity in the mesothoracic ganglia of the Asian locust (Locusta migratoria) and caterpillar of the turnip moth (Agrotis segetum). Four zones of accumulation of the enzyme were detected in the locust: (I) periphery of the neuropil, 95% of the activity; (II) intermediate between zone I and zone III, 28% less activity than zone I; (III) connective fibers, 10% less activity than zone I; (IV) center of the neuropil, 32% less activity than zone I. Two zones of cholinesterase activity were found in turnip moth caterpillar ganglia, the first corresponding to the periphery of the neuropil and the second, to the center. Enzymatic activity in the first zone was 1-3% higher than in the second. Cholinesterase inhibitors

1/2

APPROVED FOR RELEASE: 09/17/2001 CIA-RDP86-00513R002202620003-4"

"APPROVED FOR RELEASE: 09/17/2001 CIA-RDP86-00513R002202620003-4

USSR

RAKITIN, A. A., et al, Arkhiv Anatomii, Gistologii i Embriologii, Vol 59, No 9, Sep 70, pp 63-69

(alpha and beta isomers of sevin, and two organophosphorus compounds) varied in the degree of inhibition exerted. In low concentrations, they all inhibited cholinesterase activity more in the central zones than in the periphery.

2/2

APPROVED FOR RELEASE: 09/17/2001 CIA-RDP86-00513R002202620003-4"

"APPROVED FOR RELEASE: 09/17/2001 CIA-RDP86-00513R002202620003-4

USSR

UDC 621.039

ZARITSKIY, S. M., RAKITIN, I. D., and SHIKOV, S. B.

"Finite-Difference Representation of Formulas of Perturbation Theory for Calculating Reactivity"

V sb. Fiz. yadern. reaktorov (Physics of Nuclear Reactors -- Collection of Works), No 2, Moscow, Atomizdat, 1970, pp 153-167 (from RZh-Fizika, No 4, Apr 71, Abstract No 4V542)

Translation: Changes in the reactivity of fast reactors associated with a change in fuel temperature or the amount of sodium depend both on the magnitude of the perturbation and on the parameters of the critical reactor. The authors pose the problem of determining the change in reactivity with a change in these conditions. As is well-known, the reactivity is a bilinear-fractional functional of neutron flux and importance; namely, $P = L\{\sigma^b, FF^+\}/INF$, where L is the so-called operator of perturbation theory, σ^b is the perturbation cross section, INF is the importance of fission neutrons. Fluxes are determined in the multigroup diffusion approximation by solution of the finite-difference equations by the factorization method A finite-difference formula for the change in reactivity and the change in reactivity/- reactivity was obtained in the small perturbation approximation. A. G. Promokhov.

1/1

APPROVED FOR RELEASE: 09/17/2001 CIA-RDP86-00513R002202620003-4"

"APPROVED FOR RELEASE: 09/17/2001 CIA-RDP86-00513R002202620003-4

Acc. Nr: AP0038109

R

PRIMARY SOURCE: Fiziologiya Rasteniy, 1970, Vol 17, Nr 1, pp 91-95

Ref. Code: UR 0326

EFFECT OF SODIUM MALEIC HYDRAZIDE ON THE CONTENT OF TOTAL NITROGEN, PROTEINS AND NUCLEIC ACIDS IN POTATO TUBERS

Rakitin, Yu. V.; Strel'nikova, E. D.

K. A. Timiriazev Institute of Plant Physiology, USSR Academy of Sciences, Moscow

The effect of Na—MH on the total and protein nitrogen, DNA and RNA content in potato tubers is investigated. In the pre-harvest period the tops of the plants were sprayed with solutions; the doses ranged between 1.5 and 3.5 kg/ha. Na—MH doses inhibiting germination appreciably altered the nucleic acid and protein nitrogen content in the tubers. It is concluded that the growth-inhibiting action of MH is due to its inhibiting effect on biosynthesis of nucleic acids and of proteins necessary for cell growth in the buds and shoots.

//

REEL/FRAME
19731160

02

APPROVED FOR RELEASE: 09/17/2001 CIA-RDP86-00513R002202620003-4"

"APPROVED FOR RELEASE: 09/17/2001 CIA-RDP86-00513R002202620003-4

USSR

UDC 632.952:581.1 / 634.75/721

POLYAKOV, I. M., NILOVA, V. P., KSENDZOVA, E. N., ZARUBINA, M. A., RAKITINA, R. N., All-Union Institute of Plant Protection, Leningrad, All-Union Academy of Agricultural Sciences imeni V. I. Lenin

"Investigation of the Nature of Nitrafen Action on Berry Cultures"

Moscow, Khimiya v Sel'skom Khozyaystve, Vol 8, No 6, Jun 70, pp 31-34

Abstract: The study was carried out on first year "Festival'naya" strawberries and black currant of the "Liya Productive" and "Lakston" line. The plants were treated in early spring, the strawberries being sprayed twice at a week's interval with a 1% nitrafen solution and the currants once with a 2% solution. The leaves were subjected to biochemical analysis 20 days later and the fruit was checked as it ripened. The leaves of the treated strawberry plants exhibited higher levels of chlorophyll, carbohydrates, and ascorbic acid in comparison to controls, there was no indication of peroxidase activity, the polyphenoloxidase activity was increased, and

1/2

APPROVED FOR RELEASE: 09/17/2001 CIA-RDP86-00513R002202620003-4"

"APPROVED FOR RELEASE: 09/17/2001 CIA-RDP86-00513R002202620003-4

USSR

POLYAKOV, I. M., et al, Khimiya v Sel'skom Khozyaystve, Vol 8, No 6, Jun 70, pp 31-34

the activity of cytochromoxidase and ascorbatoxidase was lowered. Both types of currant showed increased content of nitrogenous materials and chlorophyll under the influence of nitrafen, and their cytochromoxidase and peroxidase activity was elevated. As far as the content of carbohydrates and vitamin C and the activity of ascorbatoxidase are concerned, the two types of currant showed different effects to the action of nitrafen. Neither nutritional nor taste qualities of the berries were affected by treatment with nitrafen.

2/2

APPROVED FOR RELEASE: 09/17/2001 CIA-RDP86-00513R002202620003-4"

"APPROVED FOR RELEASE: 09/17/2001 CIA-RDP86-00513R002202620003-4

USSR

UDC 669.14.018.5

SHATOV, YU. S., TARANOV, O. G., and RAKITINA, Z. A., Novocherkassk Scientific Research Institute of Permanent Magnets

"Phosphorus-Doped YuNDK35T5 Alloy"

Moscow, Metallovedeniye i Termicheskaya Obrabotka Metallov, No 11, 1973, p 69

Abstract: The article describes results of a study of the effect of phosphorus additions on the magnetic characteristics of the high-coercivity alloy YuNDK35T5. Iron-base alloys (35% Co, 15% Ni, 7% Al, 5.5% Ti, 3.0% Cu) containing 0.05, 0.1, 0.25, 0.30, 0.35, 0.5% phosphorus were studied. The phosphorus was introduced in the form of MF-1 copper phosphide and 10% ferrophosphorus. It was found that the coercive force, residual induction and maximum magnetic energy grow with increased phosphorus content and reach their maximum values when there is 0.1% P in the alloy. There is a sharp drop in the residual induction and magnetic energy with a further increase in the phosphorus content. The coercive force retains its maximum value up to 0.35% P, after which it likewise declines. The favorable effect of phosphorus additions on the alloy's magnetic parameters is probably due to a change in the shape

1/2

APPROVED FOR RELEASE: 09/17/2001 CIA-RDP86-00513R002202620003-4"

"APPROVED FOR RELEASE: 09/17/2001 CIA-RDP86-00513R002202620003-4

USSR

SHATOV, YU. S., et al., Metallovedeniye i Termicheskaya Obrabotka Metallov, No 11, 1973, p 69

anisotropy of the ferromagnetic alpha particles, which increase the magnetic properties. Considering the low cost and abundant supply of copper phosphide, prospects seem good for starting up the production of phosphorus-doped YuNDK35T5 alloy.

2/2

APPROVED FOR RELEASE: 09/17/2001 CIA-RDP86-00513R002202620003-4"

"APPROVED FOR RELEASE: 09/17/2001 CIA-RDP86-00513R002202620003-4

Phytology

USSR

UDC 581.1.036

SAMYGIN, G. A., RAKITINA, Z. G., and LIVSHIN, A. Z., Institute of Plant Physiology imeni K. A. Timiryazev, USSR Academy of Sciences, Moscow

"The Resistance of Winter Wheat Tissue to Freezing and Drying in Unfavorable Gas Mixtures"

Moscow, Doklady Akademii Nauk SSSR, Vol 198, No 1, 1971, pp 224-227.

Abstract: To determine whether the formation of intracellular or extracellular ice is responsible for the increased deterioration of wheat frozen and dried in gas mixtures of a composition different from that of air, samples of regular and tempered winter wheat blades and sprouts were frozen and dried in atmospheres with various percentages of oxygen, nitrogen, and carbon dioxide. After thawing and rehydration, the blades were investigated microscopically and the sprouts were allowed to grow roots in a suitable medium. The results showed that increased concentrations of carbon dioxide and decreased

1/2

APPROVED FOR RELEASE: 09/17/2001 CIA-RDP86-00513R002202620003-4"

"APPROVED FOR RELEASE: 09/17/2001 CIA-RDP86-00513R002202620003-4

USSR

SAMYGIN, G. A., RAKITINA, Z. G., and LIVSHIN, A. Z., Doklady Akademii Nauk SSSR, Vol 198, No 1, 1971, pp 224-227

concentrations of oxygen and of nitrogen raised the percentage of irreversibly destroyed cells to the same degree in samples which were frozen and in those which were dried. Since drying damages cells through withdrawal of intracellular water and formation of extracellular ice, it was concluded that unfavorable gas mixtures exert their detrimental effects during freezing of wheat by enhancing the withdrawal of intracellular water and the formation of extracellular ice.

2/2

APPROVED FOR RELEASE: 09/17/2001 CIA-RDP86-00513R002202620003-4"