"APPROVED FOR RELEASE: 08/09/2001 CIA-RDP86-00513R002202720016-9

USSR

UDC: 537:538.082.62:546.57

RYKOVA, M. A., SABIRZYANOV, A. V., and GEL'D, P. V.

"Physical Characteristics of $Cr_{5-x}V_xSi_3$ Solid Solutions at Reduced Temperatures"

Tomsk, Izvestiya VUZ--Fizika, No 7, 1973, pp 134-136

Abstract: This brief communication discusses experimental results of an investigation into some of the physical characteristics of V_5Si_3 with the T1 structure as well as its mutual solid solutions with Cr_5Si_3. The cylindrical specimens were formed by pressing the melt, impregnated with argon, into quartz tubes 3mm in diameter. The chemical composition of the melt is given. The results are given in the form of curves, such as the specific resistance of $Cr_{5-x}V_xSi_3$ as a function of the temperature and the concentration, the effect of temperature and concentration on the absolute thermal emf of the same substance, and others. The magnetic susceptibility was also studied in fields of 5000-15000 oersteds has a function of the temperature, the latter varying from 78 to 300° K, and the Hall coefficients in this same temperature range were also considered.

1/1

APPROVED FOR RELEASE: 08/09/2001 CIA-RDP86-00513R002202720016-9"

"APPROVED FOR RELEASE: 08/09/2001 CIA-RDP86-00513R002202720016-9

USSR

UDC 621.787.4:[621.882.6:669.295.5

GRINCHENKO, I. G. Candidate of Technical Sciences, RYKOVSKIY, B. P., Candidate of Technical Sciences

"Increasing the Durability of Bolts Made of Titanium Alloy VT-16 by Rolling the Fillet With a Roller"

Moscow, Vestnik Mashinostroyeniya, No 1, Jan 72, p 43

Abstract: For the effective use of titanium fastenings it is necessary to introduce, into the technological process of their production, the operation of rolling the fillet; this eliminates the harmful influence exerted upon the fatigue resistence of the bolts by the stress concentrator and by preliminary grinding. The process of the rolling of bolt fillets is described. This process increases the longevity of bolts with repeated static loads by a factor of seventeen to twenty, and increases the endurance limit by a factor of two. Two figures; one reference in the form of a footnote.

1/1

APPROVED FOR RELEASE: 08/09/2001 CIA-RDP86-00513R002202720016-9"

"APPROVED FOR RELEASE: 08/09/2001 CIA-RDP86-00513R002202720016-9

USSR

UDC 621.385.632

KALININ, YU. A., KATS, A.M., RYKSHIN, B.V.

"Investigation Of The Dependence Of The Gain And Efficiency Of A TWT On The Radius Of The Electron Flow"

Elektron. tekhnika. Nauchno-tekhn.sb. Elektron. SVCh (Electronic Technology. Scientific-Technical Collection. Microwave Electronics), 1970, No 8, pp 29-36 (from RZh--Elektronika i yeye primeneniye, No 12, December 1970, Abstract No 12A176)

Translation: The structure of the electron flow in a traveling-wave tube is investigated by photoregistration methods and a diaphragm with an aperture. A connection between the gain and efficiency of the device and the structure of the electron flow is experimentally established. The experimental results obtained are equal to the theoretical. 8 ref. S

1/1

APPROVED FOR RELEASE: 08/09/2001 CIA-RDP86-00513R002202720016-9"

"APPROVED FOR RELEASE: 08/09/2001 CIA-RDP86-00513R002202720016-9

UDC 621.385.632

USSR

KATS, A.M., MAN'KIN, I.A., RYKSHIN, B.V.

"Investigation Of The Effect Of Pulsations Of An Electron Stream On The Output Power Of A TWT"

Elektron. tekhnika. Nauchno-tekhn. sb. Elektron. SVCh (Electronic Technology. Scientific-Technical Collection. Microwave Electronics), 1970, Issue 11, pp 51-58 (from RZh--Elektronika i yeye primeneniye, No 2, February 1971, Abstract No 2A184)

Translation: An experimental and theoretical investigation was conducted of the effect of pulsations of the electron stream on the output power of a traveling-wave tube. Devices were investigated in which focusing of the electron stream was accomplished both by a magnetic periodic focusing system and by the permanent magnetic field of a solenoid. Good agreement of the experimental results with the theoretical was obtained. 6 ref. Summary.

1/1

APPROVED FOR RELEASE: 08/09/2001 CIA-RDP86-00513R002202720016-9"

"APPROVED FOR RELEASE: 08/09/2001 CIA-RDP86-00513R002202720016-9

1/2 010 UNCLASSIFIED PROCESSING DATE--11SEP70

TITLE--DIRECT SEISMOLOGICAL OBSERVATIONS ON THE BOTTOM OF THE SEAS AND OCEANS -U-

AUTHOR--RYKUNOV, L.N.

COUNTRY OF INFO--USSR, WORLD WIDE, INDIAN OCEAN

SOURCE--GEOFIZICHESKIY BYULLETEN', MOSCOW, 1970, NR 21, PP 40-50

DATE PUBLISHED--------70

SUBJECT AREAS--EARTH SCIENCES AND OCEANOGRAPHY

TOPIC TAGS--SEISMOGRAPH, SEISMIC SOUNDING, EARTHQUAKE, OCEAN BOTTOM

CONTROL MARKING--NO RESTRICTIONS

DOCUMENT CLASS--UNCLASSIFIED

PROXY REEL/FRAME--1986/1296 STEP NO--UR/0000/70/000/021/0040/0050

CIRC ACCESSION NO--AP0103178

UNCLASSIFIED

APPROVED FOR RELEASE: 08/09/2001 CIA-RDP86-00513R002202720016-9"

"APPROVED FOR RELEASE: 08/09/2001 CIA-RDP86-00513R002202720016-9

2/2 010 UNCLASSIFIED PROCESSING DATE--11SEP70

CIRC ACCESSION NO--AP0103178

ABSTRACT/EXTRACT--(U) GP-0- ABSTRACT. THE GROWING INTEREST TO THE DETAILED GEOPHYSICAL STUDY OF THE OCEANIC REGIONS HAS RESULTED IN THE INTENSIFICATION OF WORKS FOR THE ELABORATION OF MEANS OF REGISTRATION OF SEISMIC EFFECTS DIRECTLY ON THE OCEAN BOTTOM. THE APPLICATION OF THESE DEVICES (BOTTOM SEISMOGRAPHS) ALLOWS TO INCREASE THE EFFECTIVENESS OF THE EXISTING METHODS OF THE STUDY OF DEEP STRUCTURE OF OCEANIC REGIONS AND PROVIDES NEW POSSIBILITIES FOR DETAILED UNDERSTANDING OF THE SEISMIC REGIME OF THE ACTIVE REGIONS OF THE OPEN OCEAN. DURING THE RECENT YEARS (SINCE 1961) THE CHAIR OF THE EARTH'S PHYSICS OF THE PHYSICS FACULTY OF THE MOSCOW STATE UNIVERSITY HAS UNDERTAKEN WORKS WITH THE PURPOSE OF ELABORATING A NUMBER OF TYPES OF BOTTOM SEISMOGRAPHS AND CONDUCTING THEIR OPERATION FOR DEEP SEISMIC SOUNDING AND FOR THE STUDY OF THE REGIME OF MICRO EARTHQUAKES IN THE BLACK SEA AND INDIAN OCEAN.

UNCLASSIFIED

APPROVED FOR RELEASE: 08/09/2001 CIA-RDP86-00513R002202720016-9"

"APPROVED FOR RELEASE: 08/09/2001 CIA-RDP86-00513R002202720016-9

USSR UDC 681.355

SHVETSKIY, B. I., VISHENCHUK, I. M., and KRAVTSOV, R. S., Leningrad, and RYLIK, M. G. and CHEKHOVSKIY, E. M., Lvov Ploytechnical Institute

"A Digital Integrating Voltammeter"

USSR Author's Certificate No 347909 klh 03 K 13/20, filed 9 Aug 68, published 4 Sep 72 (from RZh Avtomatika Telemekhanika i Vychislitel'naya Tekhnika, No 11, Nov 73, abstract No 11 A425P)

Translation: A digital integrating voltammeter is proposed, containing an input apparatus with an amplifier, a source of base voltage, switches, a timer, integrator, zero unit, transfer and discharge instruction shaper, cyclic pulse generator, phase detector, counter, sign flipflop and frequency divider, transfer apparatus, memory apparatus, binary-decimal code-to-decimal converter and indicator display.

To convert bi-polar voltages and improve noise resistance, the voltammeter contains a zero determination device, the output of which is connected through a switch to the input of an integrator, the output of the zero unit, and one of the inputs of the transferring discharge instruction shaper; the other inputs of the latter are connected to the output of the cyclic impulse generator, the outputs of the sign flipflop, and the output of the frequency dividers, respectively.

1/2

APPROVED FOR RELEASE: 08/09/2001 CIA-RDP86-00513R002202720016-9"

"APPROVED FOR RELEASE: 08/09/2001 CIA-RDP86-00513R002202720016-9

USSR

SHVETSKIY, et al., USSR Author's Certificate No 347909 klh 03 K 13/20, filed 9 Aug 68, published 4 Sep 72 .

The outputs of the discharge and transfer instruction shaper are connected respectively to the apparatus memory discharge bus and the apparatus transfer bus; the sign flipflop is connected to the output of the high-order position of the counter, and its output is connected to one of the inputs of the phase-sensitive detector and to the control input of the transfer apparatus.

To reduce conversion error, the discharge and transfer instruction shaper contains flipflops, an inverter, and coincidence circuit. One set of flipflop inputs is connected to the output of the frequency divider; the other flipflop inputs (except for the first) are connected to the output of the cyclic pulse generator.

The input of the first flipflop is connected to the output of the zero unit; the direct output of the second and the inverted output of the third flipflop are connected to one coincidence circuit, to which the direct output of the sign flipflop and the output of the cyclic pulse generator are also connected. The direct output of the third and the inverted output of the fourth flipflops are connected to the other coincidence circuit, to which the inverted output of the sign flipflop and the output of the cyclic pulse generator are also connected; the outputs of the coincidence circuits are connected through an inverter to the transfer bus. Three illustrations.

2/2

APPROVED FOR RELEASE: 08/09/2001 CIA-RDP86-00513R002202720016-9"

"APPROVED FOR RELEASE: 08/09/2001 CIA-RDP86-00513R002202720016-9

UDC 518.5:533.6.011.35

USSR

IVANOV, M. Ya. and RYL'KO, O. A.

"Analysis of Transonic Flow in Elliptical Nozzles"

Moscow, Izvestiya Akademii Nauk, SSSR, Mekhanika Zhidkosti i Gaza, No 3, 1972, pp 161-163

Abstract: The paper deals with flow in narrowing-expanding nozzles with an elliptical cross section. The solution is obtained numerically by means of a method, generalized for the three-dimensional case, which had earlier been used for the analysis of steady and nonsteady flows in nozzles and channels. The method is based upon a difference scheme, proposed by S. K. Godunov, for the "through" calculation of discontinuous solutions of the equations of gas dynamics, which permits the flow area to be calculated without isolation of the shock waves and other particularities of the stream. The influence of the ellipticity of the nozzle shape upon the flow pattern is analyzed. 4 figures.

1/1

APPROVED FOR RELEASE: 08/09/2001 CIA-RDP86-00513R002202720016-9"

"APPROVED FOR RELEASE: 08/09/2001 CIA-RDP86-00513R002202720016-9

USSR UDC 621.791.3:669.22.669.295

RYLINIKOV, V. S., Engineer, GUBIN, A. I., Candidate of Technical Sciences

"Brazing of Titanium With Silver Brazing Alloys"

Moscow, Svarochnoye Proizvodstvo, No 1, Jan 70, pp 32-34

Abstract: The microstructure of titanium specimen brazed with silver brazing alloys was studied by means of metallographic and X-ray analysis. It was found that in the brazing of VT1 and OT4 titanium alloys with pure silver it is practically impossible to obtain a constant value of the strength of brazed joints. The obtained values of strength varied from 20 to 40 kg/mm^2, due to the formation of layers of brittle TiAg intermetallic compound. Strength values of joints brazed with silver-tin-copper brazing alloys were also somewhat scattered. However, the nature of the interaction between the liquid brazing alloy and titanium is different. For silver brazing alloys containing over 0.3 percent copper and over 0.1 percent tin, initially, Ti_2Cu and Ti_3Cu intermetallic compounds form at the contact

1/2

APPROVED FOR RELEASE: 08/09/2001 CIA-RDP86-00513R002202720016-9"

"APPROVED FOR RELEASE: 08/09/2001 CIA-RDP86-00513R002202720016-9

USSR

RYL'NIKOV, V. S., et al., Svarochnoye Proizvodstvo, No 1, Jan 70, pp 32-34

surface between titanium and the brazing alloy. Subsequently they dissolve in the brazing alloy and form a layer of TiAg intermetallic compound alloyed with copper or tin, respectively. The strongest joints were obtained by brazing with Ag+2--8 percent Cu alloy. Joints, brazed with silver-tin brazing alloys were the weakest (tensile strength up to 4 kg/mm^2). Holding time in the brazing furnace, which depends on the composition of the brazing alloy, also affects the strength of the brazed joint.

2/2

APPROVED FOR RELEASE: 08/09/2001 CIA-RDP86-00513R002202720016-9"

"APPROVED FOR RELEASE: 08/09/2001 CIA-RDP86-00513R002202720016-9

AA0051762

UR 0482

Soviet Inventions Illustrated, Section II Electrical, Derwent,

2/10

237220 FAST OPERATING D.C. CIRCUIT BREAKER. Thin partitions (16) arranged in 'V' configuration assist in extinguishing the arc and in the disposal of gases. Also a magnetic field generated by magnet (8) blows the arc away. The moving contact (4) is driven by a magnet (10) and it meets the fixed contact (7) mounted on the insulating plate (6).

5/5/10

6.12.65 as 1041576/24-7. A.M. KUSSUL et al. V.I.LENIN "URALELEKTROTYAZHMASH" WORKS. (26.6.69) Bul 8/12.2.69. Class 21c. Int.Cl. H 02c.

AUTHORS: Kussul', A. M.; Skurygin, L. K.; Rylov, G. A.
Ordena Trudovogo Krasnogo Znameni Zavod "Uralelektrotyazhmash" im. V. I. Lenina

4

1/2

19820102

APPROVED FOR RELEASE: 08/09/2001 CIA-RDP86-00513R002202720016-9"

"APPROVED FOR RELEASE: 08/09/2001 CIA-RDP86-00513R002202720016-9

AA0051762

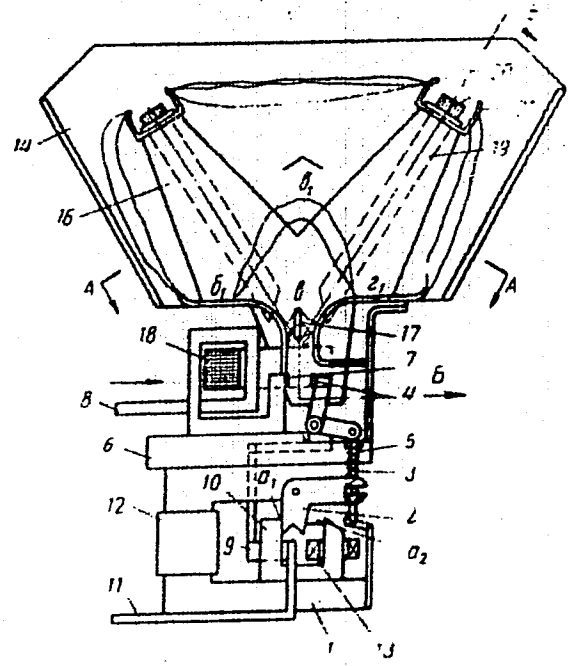

2/2

19820103

APPROVED FOR RELEASE: 08/09/2001 CIA-RDP86-00513R002202720016-9"

"APPROVED FOR RELEASE: 08/09/2001 CIA-RDP86-00513R002202720016-9

Acc. Nr. AP0055635 Abstracting Service: CHEMICAL ABST. 6-70 Ref. Code 4R0460

112479f **Effect of x-ray radiation on the rate of polyisoprene diffusion into rubber.** Vladimirskii, Yu. B.; Zakharov, G. M.; Rylov, S. A. (Leningrad, Politekh. Inst. im. Kalinina, Leningrad, USSR). *Vysokomol. Soedin., Ser. B* 1970, 12(2), 165-6 (Russ). The diffusion of tagged polyisoprene (I) (mol. wt. 2×10^4) into natural rubber (II) irradiated with x-rays at a dose rate of 700 R/sec in Ar, O, or air was studied. The diffusion coeff. of I declined from 1.8×10^{-13} to 0.6×10^{-13} cm^2/sec after II had been irradiated in Ar with 0 to 2.6×10^5 rads, suggesting that radiative crosslinking had occurred. Irradn. of II with 7×10^5 rads in the presence of O was accompanied by increased mol. mobility and lower diffusion coeff. due to competing degradation and crosslinking. CKJR

1/1

CB 7

REEL/FRAME
1984 0937

APPROVED FOR RELEASE: 08/09/2001 CIA-RDP86-00513R002202720016-9"

"APPROVED FOR RELEASE: 08/09/2001 CIA-RDP86-00513R002202720016-9

1/2 022 UNCLASSIFIED PROCESSING DATE--16OCT70

TITLE--THE RELATION BETWEEN THE ENERGY MOMEMTUM VECTOR AND THE CANONICAL MOMENTUM IN RELATIVISTIC MECHANICS -U-

AUTHOR--RYLOV, YU.A.

R

COUNTRY OF INFO--USSR

SOURCE--TEORETICHESKAYA I MATEMATICHESKAYA FIZIKA, 1970, VOL 2, NR 3, PP 333-337

DATE PUBLISHED--------70

SUBJECT AREAS--PHYSICS

TOPIC TAGS--PARTICLE MOTION, RELATIVISTIC PARTICLE, PARTICLE ANNIHILATION, KINETIC ENERGY, VECTOR, RELATIVISTIC QUANTUM MECHANICS

CONTROL MARKING--NO RESTRICTIONS

DOCUMENT CLASS--UNCLASSIFIED

PROXY REEL/FRAME--1985/2039 STEP NO--UR/0646/70/002/003/0333/0337

CIRC ACCESSION NO--AP0102068

UNCLASSIFIED

APPROVED FOR RELEASE: 08/09/2001 CIA-RDP86-00513R002202720016-9"

"APPROVED FOR RELEASE: 08/09/2001 CIA-RDP86-00513R002202720016-9

2/2 022 UNCLASSIFIED PROCESSING DATE--16OCT70

CIRC ACCESSION NO--AP0102068

ABSTRACT/EXTRACT--(U) GP-0- ABSTRACT. RELATIVISTIC MECHANICS IS CONSIDERED AS THE LIMIT CASE OF MECHANICS WITH THE FOUR INDEPENDENT CANONICAL MOMENTA P SUBI. IT IS SHOWN THAT IN THIS LIMIT CASE THE CREATION AND THE ANNIHILATION OF PARTICLES ARE POSSIBLE. THE RELATION IS REVEALED BETWEEN THE ENERGY MOMENTUM VECTOR OF THE PARTICLE AND ITS CANONICAL MOMENTUM. THE USUAL RELATION E EQUALS MINUS P SUBO BETWEEN THE ENERGY OF PARTICLE AND THE TIME COMPONENT OF CANONICAL MOMENTUM APPEARS TO BE THE PARTIAL CASE OF THE RELATION OBTAINED AND IS VALID ONLY IF THE WORLD LINE OF PARTICLE DOES NOT CHANGE ITS DIRECTION BACKWARD IN TIME.

UNCLASSIFIED

APPROVED FOR RELEASE: 08/09/2001 CIA-RDP86-00513R002202720016-9"

"APPROVED FOR RELEASE: 08/09/2001 CIA-RDP86-00513R002202720016-9

USSR

RYLOVA, T. N.

"Improvement of Formal Criterion for Determination of Semantic Connections Between Statements Based on One Model of Text Generation"

Lingvist. Probl. Avtomatiz. Inform. Poiska [Linguistic Problems of the Automation of Information Retrieval -- Collection of Works], Kiev, 1972, pp 111-127 (Translated from Referativnyy Zhurnal Kibernetika, No 9, 1973, Abstract No 9V831).

Translation: A dynamic model of the generation of text from a class of words allowing differentiation of the connection between text statements is constructed.

1/1

APPROVED FOR RELEASE: 08/09/2001 CIA-RDP86-00513R002202720016-9"

"APPROVED FOR RELEASE: 08/09/2001 CIA-RDP86-00513R002202720016-9

USSR

UDC 535.34:543.42:541.8

BOLDESKUL, I. YE., YEGOROV, YU. P., MAKOVETSKIY, YU. P., MYL'TSEV, YE. V., and FESHCHENKO, N. G., Institute of Organic Chemistry, Academy of Sciences USSR, Kiev

"Spectroscopical Investigation of the Reaction Mechanism of Phosphonium Salts with Carboxylic Acids in Solutions"

Kiyev, Teoreticheskaya i Eksperimental'naya Khimiya, Vol 9, No 3, May-Jun 73, pp 350-356

Abstract: Intermolecular reactions of quaternary phosphonium salts $(C_8H_{17})_4P^+Hal^-$ ($Hal^- = I^-, Br^-, Cl^-$) with proton donors stronger than alcohols -- the carboxylic acids (RCOOH, R = CH_3, CCl_3, CF_3) were investigated in CCl_4 solutions by means of IR spectroscopy. It has been shown that the reaction occurs through the formation of a complex with the H-bond, and that it is irreversible. A mechanism for this reaction has been proposed, according to which a halide anion of the salt is exchanged for a carboxylate anion. Since the rate of this process is symbatic with the proton donating

1/2

APPROVED FOR RELEASE: 08/09/2001 CIA-RDP86-00513R002202720016-9"

"APPROVED FOR RELEASE: 08/09/2001 CIA-RDP86-00513R002202720016-9

USSR

BOLDESKUL, I. YE., et al., Teoreticheskaya i Eksperimental'naya Khimiya, Vol 9, No 3, May-Jun 73, pp 350-356

properties of these acids and with the proton accepting properties of the salt H-bonds, it seems reasonable that the H-bond formation is the first stage of this reaction.

2/2

APPROVED FOR RELEASE: 08/09/2001 CIA-RDP86-00513R002202720016-9"

"APPROVED FOR RELEASE: 08/09/2001 CIA-RDP86-00513R002202720016-9

USSR

UDC 541.8

YEGOROV, Yu. P., RYL'TSEV, Ye. V., TARASEVICH, A. S.

"Electron-Acceptor Properties of Four-Coordination Phosphorus in Intermolecular Reactions"

Kiev, Teoreticheskaya i Eksperimental'naya Khimiya, Vol 8, No 2, Mar-Apr, 1972, pp 169-175.

Abstract: Organic compounds containing four-coordination phosphorus with phosphoryl, thiophosphoryl and imine bonds with the general form P = X have exceptionally high tendencies toward the formation of molecular complexes and associates. This tendency of these compounds has been related to the uneven distribution of the charge in the P = X bond, to the significant transfer of electron density to the $X{:}P^{+} - X^{-}$ group. Although it has been presumed in the literature that intermolecular bonds are formed in which the P atom acts as an electron acceptor, no direct confirmation has ever been presented. The purpose of the present work is to confirm this assumption by studying the mechanisms of intermolecular interaction -- the first stage in the process of chemical conversion -- using a number of oxides ($R_3P = O$) as examples. The studies were performed by IR-spectroscopy of the compounds dissolved in cyclohexane with the electron donor compounds added to the solution. The studies confirmed that organophosphorus compounds with the four-coordination phosphorus atom can participate in the formation of molecular aggregates by accepting electrons at this atom. If this interaction is the

1/2

APPROVED FOR RELEASE: 08/09/2001 CIA-RDP86-00513R002202720016-9"

"APPROVED FOR RELEASE: 08/09/2001 CIA-RDP86-00513R002202720016-9

USSR UDC 541.8

YEGOROV, Yu. P., RYL'TSEV, Ye. V., TARASEVICH, A. S., Kiev, Teoreticheskaya i Eksperimental'naya Khimiya, Vol 8, No 2, Mar-Apr, 1972, pp 169-175.

first stage in an elementary chemical conversion, in the limiting case the electrophilicity of these compounds is determined by the freedom of the phosphorus atom to accept electrons.

2/2

APPROVED FOR RELEASE: 08/09/2001 CIA-RDP86-00513R002202720016-9"

"APPROVED FOR RELEASE: 08/09/2001 CIA-RDP86-00513R002202720016-9

UDC 547.26'127

USSR

BOROVIKOV, YU. YA., RYL'TSEV, YE. V., BOLDESKUL, I. YE., FESHCHENKO, N. G., MAKOVETSKIY, YU. P., YEGOROV, YU. P., Institute of Organic Chemistry, Kiev, Academy of Sciences Ukrainian SSR

"Dielkometric Study of Trialkylphosphine Derivatives"

Leningrad, Zhurnal Obshchey Khimii, Vol 40, No 9, Sep 70, pp 1957-1962

Abstract: A study of the interaction between the molecules of trialkylphosphine oxides and their analogues in solutions by the method of dielectric permeability is reported. Trialkylphosphine oxides, trioctylphosphine sulfide, -selenide, -telluride and tetraalkylphosphine iodide were investigated. It was determined that the dipole moments and atomic polarizations of the trialkylphosphine oxides depend on the length of the hydrocarbon chain. The dipole moments of trioctylphosphine oxide, -sulfide, -selenide, and -telluride were identical within experimental error. Trioctylphosphine oxide and tetraoctylphosphine iodide are associated according to the antiparallel type in solvents of low dielectric

1/2

APPROVED FOR RELEASE: 08/09/2001 CIA-RDP86-00513R002202720016-9"

"APPROVED FOR RELEASE: 08/09/2001 CIA-RDP86-00513R002202720016-9

USSR

BOROVIKOV, YU. YA., et al, Zhurnal Obshchey Khimii, Vol 40, No 9, Sep 70, pp 1957-1962

permeability. The degree of association of trioctylphosphine oxide is higher in carbon tetrachloride than in benzene, and in chlorobenzene, trifluorobenzene, and acetone it is monomeric. The association of tetraoctylphosphine iodide persists even in solvents with high ϵ; their dipole moments are close to values corresponding to complete charge transfer from P to I.

2/2

APPROVED FOR RELEASE: 08/09/2001 CIA-RDP86-00513R002202720016-9"

"APPROVED FOR RELEASE: 08/09/2001 CIA-RDP86-00513R002202720016-9

UDC 547.26'11

USSR

RYMAREVA, T. G., MEL'NIKOV, N. N., and KHASKIN, B. A., All Union Scientific Research Institute of Chemical Plant Protective Agents

"Reaction of Etheramides of Thiophosphoric Acid With Sodium Methoxide"

Leningrad, Zhurnal Obshchey Khimii, Vol 43 (105), No 3, Mar 73, pp 676-677

Abstract: Heating equimolar quantities of an etheramide of thiophosphoric acid and sodium methoxide in methanol at 80° for 8-10 hrs yields initially a trialkylthiophosphate and an aliphatic amine. Then the trialkylthiophosphate reacts further with sodium methoxide yielding a sodium salt of 0,0-dialkylthiophosphoric acid. It also alkylates stepwise the amine obtained all the way to trialkylammonium salt of 0,0-dialkylthiophosphoric acid.

APPROVED FOR RELEASE: 08/09/2001 CIA-RDP86-00513R002202720016-9"

"APPROVED FOR RELEASE: 08/09/2001 CIA-RDP86-00513R002202720016-9

USSR

UDC 547.26'118

KHASKIN, B. A., RYMAREVA, T. G., MEL'NIKOV, N. N., and BELYKH, L. N., All Union Scientific Research Institute of Chemical Plant Protection Agents

"Reaction of Ester-Amides of Phosphorus Thioacids With Sodium Iodide"

Leningrad, Zhurnal Obshchey Khimii, Vol 43 (105), No 2, Feb 73, pp 435-436

Abstract: In studying the reactions of amidoesters of phosphorus thioacids with sodium iodide it was found that this reaction may take different routes, depending on the structure of the substituent at the nitrogen atom of the amidoester molecule. With two alkyl substituents at the nitrogen atom the reaction carried out at room temperature in acetone after 3-5 hrs will yield the sodium salt of O-methyl-N,N-dialkylamidothiolphosphoric acid and methyl iodide. When a hydrogen atom is attached to the amide, the reaction goes further and after 5 hrs of heating to 120° in acetone in a sealed vial yields methylmercaptan, tetramethylammonium iodide and a polymer.

1/1

APPROVED FOR RELEASE: 08/09/2001 CIA-RDP86-00513R002202720016-9"

"APPROVED FOR RELEASE: 08/09/2001 CIA-RDP86-00513R002202720016-9

USSR UDC 547.26'118

KHASKIN, B. A., [redacted] MEL'NIKOV, N. N., All-Union Scientific Research Institute of Chemical Agents for Plant Protection

"Concerning a Secondary Reaction in the Synthesis of O-Alkyl O-Arylthiophosphoric Acid Amides"

Leningrad, Zhurnal Obshchey Khimii, Vol 42(104), No 7, Jul 72, pp 1653-1654

Abstract: When O-alkyl O-arylthiophosphoric acid amides were synthesized by reacting gaseous methylamine or dimethylamine with O-alkyl O-arylthiophosphoryl chlorides in absolute benzene at 40-60°C, products of a secondary reaction were observed -- salts of the corresponding amine and arylamidothiophosphoric acid. The synthesis of these byproducts is explained as follows. When the primary or secondary amine attacks the phosphorus atom, the O-alkyl O-arylthiophosphoryl halide is dealkylated with formation of the alkyl halide and O-aryl amidothiophosphoric acid. This phosphoric acid then forms the corresponding ammonium salt in the presence of the amine. The proposed reaction is confirmed by data in the literature on reaction of O,O-dialkylphosphoric acid halides with tertiary amines and aniline.

1/1

APPROVED FOR RELEASE: 08/09/2001 CIA-RDP86-00513R002202720016-9"

"APPROVED FOR RELEASE: 08/09/2001 CIA-RDP86-00513R002202720016-9

USSR UDC 615.777/779

RYMAREVA, T. G., KHASKIN, B. A., MEL'NIKOV, N. N.

"Reaction of Amide Esters of Thiophosphoric Acid with Primary and Secondary Amines"

Leningrad, Zhurnal Obshchey Khimii, Vol 42(104), No 7, Jul 72, pp 1473-1477

Abstract: The alkylating capacity of amide esters of thiophosphoric acid was studied. It was found that when equimolecular quantities of primary and secondary aliphatic amines reacted with amide esters of thiophosphoric acid, mono-, bis- and quaternary ammonium salts were produced, depending on the reaction conditions. It was also found that when primary or secondary amines, taken in excess, were alkylated with amide esters of triphosphoric acid, salts of the corresponding amine and amidothiophosphoric acid were formed.

1/1

APPROVED FOR RELEASE: 08/09/2001 CIA-RDP86-00513R002202720016-9"

"APPROVED FOR RELEASE: 08/09/2001 CIA-RDP86-00513R002202720016-9

1/2 018 UNCLASSIFIED

TITLE--EXPOSURE OF DISLOCATIONS IN NIOBIUM CARBIDE -U- PROCESSING DATE--02OCT70

AUTHOR-(02)-TURCHIN, V.N., RYMASHEVSKIY, G.A.

COUNTRY OF INFO--USSR

SOURCE--KRISTALLOGRAFIYA 1970, 15(1), 193-4

DATE PUBLISHED--------70

SUBJECT AREAS--PHYSICS, ELECTRONICS AND ELECTRICAL ENGR.

TOPIC TAGS--CRYSTAL LATTICE DISLOCATION, ETCHED CRYSTAL, MODEL, CRYSTAL LATTICE STRUCTURE, NIOBIUM CARBIDE

CONTROL MARKING--NO RESTRICTIONS

DOCUMENT CLASS--UNCLASSIFIED

PROXY REEL/FRAME--1989/0767 STEP NO--UR/0070/70/015/001/0193/0194

CIRC ACCESSION NO--AP0107309

UNCLASSIFIED

APPROVED FOR RELEASE: 08/09/2001 CIA-RDP86-00513R002202720016-9"

"APPROVED FOR RELEASE: 08/09/2001 CIA-RDP86-00513R002202720016-9

2/2 018 UNCLASSIFIED PROCESSING DATE--02OCT70

CIRC ACCESSION NO--AP0107309

ABSTRACT/EXTRACT--(U) GP-0- ABSTRACT. PITS AND DISLOCATION LOOPS WERE EXPOSED BY ETCHING NBC UNDER THE FOLLOWING CONDITIONS: (1) WITH A MIXT. OF HNO SUB3 PLUS HF (HNO SUB3 10 PLUS HF 3 ML) FOR 30-60 SEC AT 20DEGREES, AND (2) ELECTROLYTICALLY IN A MIXT. OF H SUB2 SO SUB4 PLUS HF PLUS HNO SUB3 (H SUB2 SO SUB4 50 PLUS HF 10 PLUS HNO SUB3 20 ML) AT 30 V AND 0.8-1.0 A-MM PRIME2, FOLLOWED BY ETCHING AS IN (1). THE ETCH PITS FORM CHARACTERISTIC SUB BOUNDARIES, D. 10 PRIME4 CM PRIME NEGATIVE2. BY ETCHING THE PITS (100), INCLUSIONS AND FRESH DISLOCATIONS ARE EXPOSED. THE DISLOCATION D. AT THE BRANCH OF THE 3 FOLD JUNCTION SHOWS A MORE COMPLEX CONSTRUCTION OF THE SUB BOUNDARY IN RELATION TO THE SIMPLE INCLINED BOUNDARY MODEL.

UNCLASSIFIED

APPROVED FOR RELEASE: 08/09/2001 CIA-RDP86-00513R002202720016-9"

"APPROVED FOR RELEASE: 08/09/2001 CIA-RDP86-00513R002202720016-9

USSR

UDC 621.791.793.011

SEMENOV, V. M., Engineer, Novokramatorskiy Machine Building Plant imeni V. I. Lenin, and GEL'MAN, A. S., Doctor of Technical Sciences, and RYMKEVICH, A. I., Candidate of Technical Sciences, Central Scientific Research Institute of Heavy Machine Building

"Temperature Interval of Metal Brittleness During Electroslag Welding"

Moscow, Svarochnoye Proizvodstvo, No 10, 1973, pp 10-11

Abstract: The temperature interval of brittleness and area of hot crack nucleation during electroslag welding were studied to investigate the process of hot crack formation and to develop measures of preventing them. Tests were made with steel St3 using welding wires Sv-10G2 and 08KhN2M and flux AN-348. It was found that the surface temperature of the slag bath was almost 1400°C and rises to 1600°C and higher during the welding process. To determine the critical time interval during which the temperature interval of brittleness exists, plates measuring 20 x 80 x 150 mm were electroslag welded up to the instant when the surface of the metal bath reached the top edge of the plates. This moment was fixed by an electric sensor which is short circuited and automatically stops the welding process and, within specified time intervals (10, 20, 30, 40 and 50 sec), the seam deformation mechanism is switched on with

1/2

APPROVED FOR RELEASE: 08/09/2001 CIA-RDP86-00513R002202720016-9"

"APPROVED FOR RELEASE: 08/09/2001 CIA-RDP86-00513R002202720016-9

USSR

SEMENOV, V. M., et al., Svarochnoye Proizvodstvo, No 10, 1973, pp 10-11

certain force from which the time interval for minimum rate of seam deformation leading to crack formation can be determined. Hot cracks develop after 20 seconds with the largest cracks appearing after 30-40 seconds. The area of crack nucleation was found to be the crystallization front. 4 figures, 2 bibliographic references.

2/2

APPROVED FOR RELEASE: 08/09/2001 CIA-RDP86-00513R002202720016-9"

"APPROVED FOR RELEASE: 08/09/2001 CIA-RDP86-00513R002202720016-9

1/2 011 UNCLASSIFIED PROCESSING DATE--23OCT70

TITLE--MEASUREMENT OF SMALL COLOR DIFFERENCES IN DYED TEXTILE MATERIALS -U-

AUTHOR-(03)-SHESTERNINA, G.P., BELENKIY, L.I., RYMOV, A.I.

COUNTRY OF INFO--USSR

SOURCE--IZV. VYSSH. UCHEB, ZAVED., TEKHNOL. TEKST. PROM. 1970, (1), 80-4

DATE PUBLISHED--------70

SUBJECT AREAS--MATERIALS, METHODS AND EQUIPMENT

TOPIC TAGS--DYE, TEXTILE, TEST METHOD

CONTROL MARKING--NO RESTRICTIONS

DOCUMENT CLASS--UNCLASSIFIED

PROXY REEL/FRAME--2000/0791 STEP NO--UR/0324/70/000/001/0080/0084

CIRC ACCESSION NO--AP0124460

UNCLASSIFIED

APPROVED FOR RELEASE: 08/09/2001 CIA-RDP86-00513R002202720016-9"

"APPROVED FOR RELEASE: 08/09/2001 CIA-RDP86-00513R002202720016-9

2/2 011 UNCLASSIFIED PROCESSING DATE--23OCT70

CIRC ACCESSION NO--AP0124460

ABSTRACT/EXTRACT--(U) GP-0- ABSTRACT. A DISCUSSION WITH 12 REFS., FOLLOWED BY THE EXPTL. EVALUATION OF 4 WIDELY USED METHODS FOR THE DETN. OF CLOTH COLORS (D. NICKERSON, ET AL., 1944 AND 1950, G. WYSZECKI, 1963, S., ET AL., 1968). FACILITY: VSES. ZAOCH. INST. TEKST. LEGK. PROM., MOSCOW, USSR.

UNCLASSIFIED

APPROVED FOR RELEASE: 08/09/2001 CIA-RDP86-00513R002202720016-9"

"APPROVED FOR RELEASE: 08/09/2001 CIA-RDP86-00513R002202720016-9

USSR

UDC 621.771.35.001.5

KYMOV, V. A., POLUKHIN, P. I., ISAYEV, L. M., VATKIN, Yu. Ya., and NEMTSOV, A. S.

"Determining the Basic Parameters of the Process of Continuous, Roll-Less Shaping of Skelp"

Plasticheskaya Deformatsiya Metallov i Splavov, Moscow, No 64, "Metallurgiya," 1970, pp 152-158

Translation: Proceeding from the condition of continuity of the deformation area, the basic parameters of the process of roll-less shaping of skelp are found: the work of shaping; the length of the deflecting area; the traction force of the circular-pass stands; and their drive power. Two figures and three bibliographic entries.

1/1

APPROVED FOR RELEASE: 08/09/2001 CIA-RDP86-00513R002202720016-9"

"APPROVED FOR RELEASE: 08/09/2001 CIA-RDP86-00513R002202720016-9

USSR

UDC 669.293:669.774.21

PAVLOV, I. M., RYMOV, V. A., SAUTIN, Yu. I., IZOTOV, V. M., KRICHEVSKIY, Ye. M., YEL'CHANINOV, V. N., and NEMTSOV, A. S.

"Some Problems in the Manufacture of Welded Pipes"

Moscow, Tsvetnyye Metally, No 3, Mar 70, pp 50-52

Abstract: The cost of seamless pipe from niobium and its alloys is high due to the low percentage of pipe fit for service (10--15%). The present study describes a more economical production technology for thin-walled pipe from a [illegible]skelp. Niobium ingots alloyed with titanium and zirconium were used as the starting material. The mechanical properties of the plates and the electron-beam welding parameters are given in tabular form. The mechanical test data show that preliminary vacuum annealing of the parent metal slightly reduces the strength properties (by 12--15%) and considerably increases elongation per unit length (1.5 to twofold). The strength properties of the welds are somewhat lower than those of the parent material whereas elongation per unit length remains at the same level. Metallographic analysis revealed coarse-grained dendritic structure (for the weld area) with dark inclusions. The microhardness is the same in both the weld and parent metal and ranges from 270 to 330 kg/mm^2. The microhardness of electron-beam welds is about the same as that of argon-arc welds. Prior to

1/2

APPROVED FOR RELEASE: 08/09/2001 CIA-RDP86-00513R002202720016-9"

"APPROVED FOR RELEASE: 08/09/2001 CIA-RDP86-00513R002202720016-9

USSR

PAVLOV, I. M., Tsvetnyye Metally, No 3, Mar 70, pp 50-52

rolling the billets were annealed at 1200°C. For 11.6-and 12-mm pipes the total deformation was 40 to 60%; for 20 mm pipes -- 33%. The pipes passed flattening tests to the point of wall contiguity. The new technology of the process makes it possible to reduce by 2 to 2.5 times the cost of the finished product, with the physicomechanical properties remaining the same.

2/2

APPROVED FOR RELEASE: 08/09/2001 CIA-RDP86-00513R002202720016-9"

"APPROVED FOR RELEASE: 08/09/2001 CIA-RDP86-00513R002202720016-9

USSR

UDC: 621.317.39

ZHUKOV, V. I., MIKHALEVSKIY, V. I., RYMSHA, V. A.

"A Device for Measuring Group Delay Time"

USSR Author's Certificate No 269015, filed 9 Aug 68, published 10 Aug 70 (from RZh-Radiotekhnika, No 6, Jun 71, Abstract No 6A307 P)

Translation: Devices are known for measurement of group delay time in objects with territorially spaced input and output without using an additional channel for reference frequency transmission. A high-stability oscillator on one fixed frequency is located to each side of the object to be studied. A measurement based on comparing the phases of the measurement and reference signals is carried out on the reception side. In order to increase precision and reduce the lower level of measurements, the proposed device utilizes a signal shaped by an additional divider on the transmitting side of the communications channel for controlling a wobbulator, and a selector is used for additional modulation of the sweep frequency signal during only forward sweep. A selector and control pulse shaper are used for precontrol of the counter divider on the reception side of the communications channel. E. L.

1/1

APPROVED FOR RELEASE: 08/09/2001 CIA-RDP86-00513R002202720016-9"

"APPROVED FOR RELEASE: 08/09/2001 CIA-RDP86-00513R002202720016-9

USSR UDC: 621.391.883.2

RYMSHIN, V. P.

"Interference Resistance of Phase Telegraphy With Ideal Limiters in a Channel With Variable Parameters"

V sb. Raschety radiotekhn. skhem i proyektir. radioapparatury (Calculations of Radio Circuits and Design of Radio Equipment--collection of works), Omsk, 1970, pp 59-63 (from RZh-Radiotekhnika, No 6, Jun 71, Abstract No 6A47)

Translation: The paper deals with resistance to interference in phase telegraphy and relative phase telegraphy in a channel with Gaussian noises and with Rayleigh fading when an ideal limiter is used in the receiver (i. e. a device which eliminates all amplitude variation of a signal without changing phase ratios). An expression is derived for the probability of receiver error. It is shown that the use of an ideal limiter does not cut down resistance to interference any more than in a channel with constant parameters. Bibliography of four titles. N. S.

1/1

APPROVED FOR RELEASE: 08/09/2001 CIA-RDP86-00513R002202720016-9"

"APPROVED FOR RELEASE: 08/09/2001 CIA-RDP86-00513R002202720016-9

Acc. Nr.: AP0046868

Ref. Code: UR0122

USSR

UDC 621.224.253.67:621.787.4

KUDRYAVTSEV, I. V., Professor, Director of Technical Sciences, SCHEGOLEV, G. S., Professor and RYMYNOVA, E. V., Engineer

"Increasing the Durability of Components of Powerful Hydraulic Turbine Wheels"

Moscow, Vestnik Mashinostroyneiya, No 1, 1970, pp 22-25

Abstract: This article describes a series of tests conducted jointly by the Central Scientific-Research Institute of Technology and Mechanical Engineering (TsNIITMASH) and by Leningrad Mashine Tool Plant (LMZ) on samples made of 25XIMF steel, with the purpose of evaluating the increase in durability of components of the blade adjustment mechanism, for powerful hydraulic Turbine wheels, obtained by surface strengthening of chamfers by means of vibrating roller. Data are presented on the shape of samples, their heat treatment, the chamfer radius, the number of impacts per minute, the impact energy, and etc. A schematic diagram of

1/2

Reel/Frame
19790189

18

APPROVED FOR RELEASE: 08/09/2001 CIA-RDP86-00513R002202720016-9"

"APPROVED FOR RELEASE: 08/09/2001 CIA-RDP86-00513R002202720016-9

AP0046868

the device used for penumatic hammering of chamfers, and also a photograph of the instrument for measuring the groove depth after hammering process, are given. The results of the fatigue tests on various samples with different chamfer radius presented in a table and in graphs, are discussed. The effect of surface strengthening, of scale factor, and of chamfer radius on the endurance limit is analyzed. The method described here was used for increasing the durability of components of powerful hydraulic turbines of Verkhne-Tulomskoy GES, and is being a compulsory shop practice at LMZ. Original article has 5 figures, 3 tables and 3 formulas.

2/2

87

19790189

APPROVED FOR RELEASE: 08/09/2001 CIA-RDP86-00513R002202720016-9"

"APPROVED FOR RELEASE: 08/09/2001 CIA-RDP86-00513R002202720016-9

1/3 035

UNCLASSIFIED

TITLE--ELECTROCARDIOGRAM OF A DOG UNDER CONDITIONS OF PROGRESSIVE HYPOXIA -U-

PROCESSING DATE--27NOV70

AUTHOR-(02)-AVAZBAKIYEVA, M.F., RYMZHANOV, K.S.

COUNTRY OF INFO--USSR

SOURCE--IZVESTIYA AKADEMII NAUK KAZAKHSKOY SSR, SERIYA BIOLOGICHESKAYA, 1970, NR 1, PP 60-62

DATE PUBLISHED--------70

SUBJECT AREAS--BIOLOGICAL AND MEDICAL SCIENCES

TOPIC TAGS--ELECTROCARDIOGRAPHY, DOG, HYPOXIA, RESPIRATION, CARBON DIOXIDE, GAS ANALYZER

CONTROL MARKING--NO RESTRICTIONS

DOCUMENT CLASS--UNCLASSIFIED

PROXY REEL/FRAME--3007/0377

STEP NO--UR/0404/70/000/001/0060/0062

CIRC ACCESSION NO--AP0135865

UNCLASSIFIED

APPROVED FOR RELEASE: 08/09/2001 CIA-RDP86-00513R002202720016-9"

"APPROVED FOR RELEASE: 08/09/2001 CIA-RDP86-00513R002202720016-9

2/3 035 UNCLASSIFIED

CIRC ACCESSION NO--AP0135865 PROCESSING DATE--27NOV70

ABSTRACT/EXTRACT--(U) GP-0- ABSTRACT. CARDIAC ACTIVITY CHANGES BROUGHT ABOUT BY PROGRESSIVE HYPOXIA HAVE BEEN INVESTIGATED IN A CLOSED RECURRING, RESPIRATORY SYSTEM WITH THE SIMULTANEOUS ABSORPTION OF EXHALED CO SUB2. THE PRESSURE DROP OF OXYGEN IN THE INHALED AIR WAS MEASURED POLAROGRAPHICALLY ON A "GODART" COMBINATION ANALYZER. EKG DATA WERE OBTAINED ON 18 DOGS. THE OXYGEN CONTENT WITHIN THE RECURRING RESPIRATION SYSTEM DECREASED PROGRESSIVELY. THE HYPOXIC TIME LENGTH DURING VARIATION OF OXYGEN DECREASED PROGRESSIVELY. THE HYPOXIC TIME LENGTH DURING VARIATION OF OXYGEN PRESSURE DROP RATE (DELTA P O SUB2 MIN HG-MIN) IN THE INHALED AIR, FROM 0.7 TO 1.26, IS SHOWN IN TABLE 1. TOTAL HYPOXIC TIME IN OUR EXPERIMENT EQUALED 122.81 PLUS OR MINUS 6.57 MIN. TABLE 1 SHOWS THE ALTITUDE ABOVE SEA LEVEL (AA) IN METERS AND THE ASSOCIATED HYPOXIC TIME IN MIN OVER M PLUS OR MINUS IN (HT). (AA) 0-1000, (HT) 29.08 PLUS OR MINUS 2.19. (AA) 1000-2000, (HT) 18.91 PLUS OR MINUS 1.90. (AA) 2000-3000, (HT) 16.16 PLUS OR MINUS 0.78. (AA) 3000-4000, (HT) 14.33 PLUS OR MINUS 0.38. (AA) 4000-5000, (HT) 11.75 PLUS OR MINUS 0.33. (AA) 5000-6000, (HT) 10.16 PLUS OR MINUS 0.42. (AA) 6000-7000, (HT) 8.91 PLUS OR MINUS 0.30. (AA) 7000-8000, (HT) 7.41 PLUS OR MINUS 0.17. (AA) 8000-9000, (HT) 6.10 PLUS OR MINUS 0.10. THE RESULTS OF THESE EXPERIMENTS HAVE SHOWN THAT, IN THE INITIAL STATE, THE RATE OF CARDIAC CONTRACTION RANGED BETWEEN 61 AND 114 AVERAGING 85 BEATS-MIN. THE EKG ALSO SHOWED RESPIRATORY SINUX ARRHYTHMIA AND A POLYMORPHIC STATE OF THE T PROJECTION. AT REST, THE SYSTOLIC INDEX RANGED FROM 29 TO 47 PERCENT, AVERAGING 37 PERCENT.

UNCLASSIFIED

APPROVED FOR RELEASE: 08/09/2001 CIA-RDP86-00513R002202720016-9"

"APPROVED FOR RELEASE: 08/09/2001 CIA-RDP86-00513R002202720016-9

035

UNCLASSIFIED

CIRC ACCESSION NO--AP0135865 PROCESSING DATE--27NOV70

ABSTRACT/EXTRACT--THE RATE OF CARDIAC CONTRACTION INCREASED WITH ALTITUDE: 96 BEATS-MIN AT 3,000 M; 140 AT 6,000 M; 175 AT 8,000 M; AND 162 AT 9,000 M.

FACILITY: KAZAKH STATE UNIVERSITY IMENI S. M. KIROV.

UNCLASSIFIED

APPROVED FOR RELEASE: 08/09/2001 CIA-RDP86-00513R002202720016-9"

"APPROVED FOR RELEASE: 08/09/2001 CIA-RDP86-00513R002202720016-9

USSR

RYNDA, A. I.

UDC: 621.375.4

"Analyzing an Inverse Stage With Emitter Coupling"

V sb. Radioelektron. v nar. kh-ve SSSR, Ch. 2 (Radioelectronics in the National Economy of the USSR, Part 2--collection of works) Kuybyshev, 1970, pp 91-101 (from RZh-Radiotekhnika, No. 3, March 71, Abstract No. 3D133)

Translation: The analysis is made by replacing the transistor with an equivalent pi-type circuit. Formulas are obtained for practical computation according to practical requirements. Five illustrations, bibliography of five. N. S.

1/1

APPROVED FOR RELEASE: 08/09/2001 CIA-RDP86-00513R002202720016-9"

"APPROVED FOR RELEASE: 08/09/2001 CIA-RDP86-00513R002202720016-9

USSR

RYNDA, A. I. UDC: 621.375.4

"High-Frequency Correction in an Inverted Stage With Emitter Coupling"

V sb. Radioelektron. v nar. kh-ve SSSR, Ch. 2 (Radioelectronics in the National Economy of the USSR, Part 2--collection of works) Kuybyshev, 1970, pp 102-112 (from RZh-Radiotekhnika, No. 3, March 71, Abstract No. 3D157)

Translation: The simplified circuit of an inverted stage with emitter coupling and emitter correction in the leading leg is considered; correction is not introduced into the controlled leg. It is assumed that the transistor has the same parameters in the legs; the loads in the collector circuits are also the same. The analysis is conducted on the basis of experimentally verified computations. Four illustrations, bibliography of three, N. S.

1/1

APPROVED FOR RELEASE: 08/09/2001 CIA-RDP86-00513R002202720016-9"

"APPROVED FOR RELEASE: 08/09/2001 CIA-RDP86-00513R002202720016-9

USSR

UDC 621.375.121

TSYKIN, G.S., RYNDA, A.N. [Members Scientific-Technical Society Of Radio Engineering, Electronics, And Communications imeni A.S. Popov]

"Calculation Of Stages Of An Amplifier Of Harmonic And Pulse Signals With Emitter High-Frequency Correction"

Radiotekhnika, Vol 27, No 5, May 1972, pp 94-100

Abstract: A method is described for the engineering calculation of wide band transistorized amplifier stages of amplifiers of both harmonic and pulse signals. A circuit for high-frequency correction of series complex current feedback (circuit of emitter high-frequency correction) is examined. Computed formulas and graphics are presented as well as examples of calculations. An experimental study of a number of stages of an amplifier of both harmonic and pulse signals, assembled on the basis of transistors with carefully measured parameters, showed very good agreement between the data calculated by the methods described in the paper and the experimental data. The deviation of the calculated and experimental data lies in the limits of precision of the measurements and ordinarily does not exceed 2-3 percent. 5 fig. 3 ref. Received, 22 Nov 1971.

1/1

APPROVED FOR RELEASE: 08/09/2001 CIA-RDP86-00513R002202720016-9"

"APPROVED FOR RELEASE: 08/09/2001 CIA-RDP86-00513R002202720016-9

USSR

UDC: 621.791.76:621

SOROCHINSKIY, A. P., Candidate of Technical Sciences, KONVISHER, B. YA., RYNDENKO, V. V., and CHERNYY, A. SH., Engineers, Planning-Design Bureau of Electrohydraulics, Nikolayev

"Welding by the Electric Exploding of the Conductor"

Kiev, Avtomaticheskaya Svarka, No 9, Sep 73, pp 54-56

Abstract: Welding by the electric exploding of the conductor involves the following: electric energy is fed from the storage device (a capacitor bank) to current conductors where a wire explodes and forms a powerful shock wave which moves in a radial direction. Under the effect of the shock wave, the element being welded deforms and moves at a high rate of speed towards the surface of the fixed element. Welding takes place during the collision of the elements. Good joints were produced from sufficiently plastic uniform and differing materials. Factors which affect weld quality are indicated.

1/1

APPROVED FOR RELEASE: 08/09/2001 CIA-RDP86-00513R002202720016-9"

"APPROVED FOR RELEASE: 08/09/2001 CIA-RDP86-00513R002202720016-9

Acc. Nr: AA0108690 RYNDIN G.P. Ref. Code: UR 0482

Abstracting Service: Soviet Inventions Illustrated, Section I Chemical, Derwent, 3/70

244368 SPRING SHEET GRAB/STACKER comprises a rotary frame (1) slotted for the plates (2) each with magnet (3), bolts (4) and spring (5) to soften impact when lowered on to the sheets. The fourth plate is linked to a ram (6) and carries two bars (7) with nuts (8) for setting the required sheet set-down pitch. All plates are linked by a parallellogram (9). The stacker is placed so that the plate magnets contact the spring sheets, are energised and lift the sheets to where the ram is cut in which sprends the sheets on the plates by the required pitch and so lay these on the hearth conveyor once the magnets are de-energised.

11.3.68 as 1226096/22-1. KUZNETSOV.V.S., Y.P.RYNDIN, A. A.ZANDER et al. ULYANOVSK ENGINEERING RES.INST. (10.10. 69) Bul 18/28.5.69. Class 18c. Int.Cl. C 21 d.

18

1/3

REEL/FRAME
19900414

APPROVED FOR RELEASE: 08/09/2001 CIA-RDP86-00513R002202720016-9"

"APPROVED FOR RELEASE: 08/09/2001 CIA-RDP86-00513R002202720016-9

Acc. Nr.: AA0108690

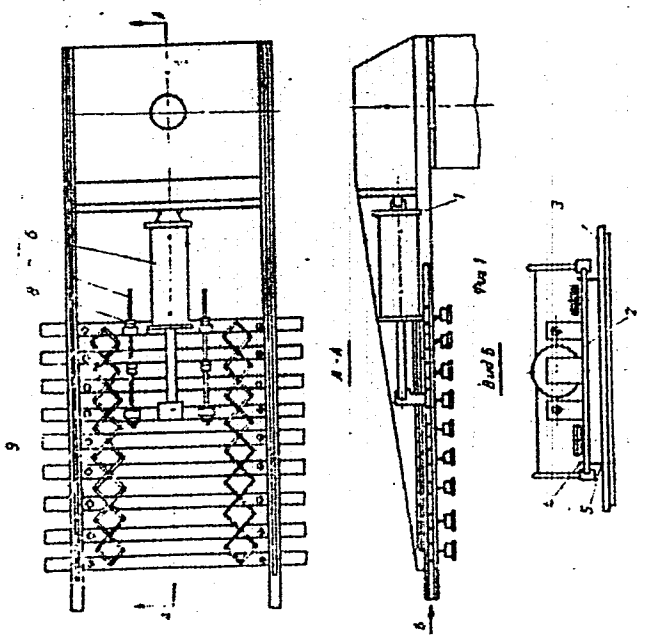

2/3

REEL/FRAME

19900415

BS

APPROVED FOR RELEASE: 08/09/2001 CIA-RDP86-00513R002202720016-9"

"APPROVED FOR RELEASE: 08/09/2001 CIA-RDP86-00513R002202720016-9

AAD 108690

AUTHORS: Kuznetsov, V. S.; Ryndin, G. P.; Zander, A. A.; Vavilin, V. A.

Ul'yanovskiy Nauchno-Issledovatel'skiy i Proyektno-Tekhnologicheskiy Institut Mashinostroyeniya

3/3

19900416

APPROVED FOR RELEASE: 08/09/2001 CIA-RDP86-00513R002202720016-9"

"APPROVED FOR RELEASE: 08/09/2001 CIA-RDP86-00513R002202720016-9

USSR

UDC: 681.325.57

RYNDIN, Zh. V., Ryazan Punchcard Tabulator Plant

"A Binary-Decimal Accumulative Adder"

Moscow, Otkrytiya, izobreteniya, promyshlennyye obraztsy, tovarnyye znaki, No 5, Feb 71, Author's Certificate No 293241, Division G, filed 4 Jan 71, published 15 Jan 71, p 164

Translation: This Author's Certificate introduces a binary-decimal accumulative adder which contains a summing register, a carry register and also AND and OR logic elements. As a distinguishing feature of the patent, the speed of the device is increased by adding three AND circuits at the input of the carry register. One of the inputs of the first AND circuit is connected to the direct output of the second digital place in the summing register, and one of the inputs of the second AND circuit is connected to the direct output of the third digital place in the summing register. The outputs of both AND circuits are connected to the inputs of the OR circuit for the fourth digital place of the carry register. One of the inputs of the

1/2

APPROVED FOR RELEASE: 08/09/2001 CIA-RDP86-00513R002202720016-9"

"APPROVED FOR RELEASE: 08/09/2001 CIA-RDP86-00513R002202720016-9

USSR

RYNDIN, Zh. V., Otkrytiya, izobreteniya, promyshlennyye obraztsy, tovarnyye znaki, No 5, Feb 71, Author's Certificate No 293241

third AND circuit is connected to the inverse output of the second digital place of the summing register, and the output of the third AND circuit is connected to an input of the OR circuit for the third digital place of the carry register. The other inputs of the AND elements and of the OR element for the second digital place of the carry register are connected to the control line.

2/2

APPROVED FOR RELEASE: 08/09/2001 CIA-RDP86-00513R002202720016-9"

"APPROVED FOR RELEASE: 08/09/2001 CIA-RDP86-00513R002202720016-9

UNCLASSIFIED

TITLE--CP VIOLATION AND PARTICLE MIXTURE MODELS -U- PROCESSING DATE--16OCT70

AUTHOR--RYNDIN, R.M.

COUNTRY OF INFO--USSR

SOURCE--INP-681, PP 46-58

DATE PUBLISHED-------70

SUBJECT AREAS--PHYSICS, NUCLEAR SCIENCE AND TECHNOLOGY

TOPIC TAGS--EXPERIMENTAL PHYSICS, NUCLEAR MODEL, RADIOACTIVE DECAY, PION, K MESON, QUANTUM MECHANICS

CONTROL MARKING--NO RESTRICTIONS

DOCUMENT CLASS--UNCLASSIFIED

PROXY REEL/FRAME--1983/1756

STEP NO--UR/0000/70/000/000/0046/0058

CIRC ACCESSION NO--AT0054594

UNCLASSIFIED

APPROVED FOR RELEASE: 08/09/2001 CIA-RDP86-00513R002202720016-9"

"APPROVED FOR RELEASE: 08/09/2001 CIA-RDP86-00513R002202720016-9

2/2 015 UNCLASSIFIED

CIRC ACCESSION NO--AT0054594 PROCESSING DATE--16OCT70

ABSTRACT/EXTRACT--(U) GP-0- ABSTRACT. THE MAIN FEATURES OF CP CONSERVING MODELS ARE REVIEWED, AND SOME EXPERIMENTS FOR THE TWO PION DECAY MODE OF THE NEUTRAL KAON WHICH ARE TESTS OF SUCH MODELS ARE DISCUSSED. IT IS FOUND THAT ANY QUANTUM MECHANICAL DESCRIPTION OF PRESENT EXPERIMENTAL DATA IS NOT POSSIBLE. FACILITY: JOINT INST. FOR NUCLEAR RESEARCH, DUBNA USSR.

UNCLASSIFIED

APPROVED FOR RELEASE: 08/09/2001 CIA-RDP86-00513R002202720016-9"

"APPROVED FOR RELEASE: 08/09/2001 CIA-RDP86-00513R002202720016-9

USSR

UDC: 621.319.4

3

NEYMAN, M. I., SOKOLOVA, M. A., SVERDLOVA, A. N., VINOGRADOVA, N. V., RYNDINA, L. P., STARENCHENKO, V. G., KOTEL'NIKOVA, L. P.

"Thin-Film Ceramic Capacitors With High Specific Capacitance"

Elektron. tekhnika. Nauch.-tekhn. sb. Radiodetali (Electronic Technology. Scientific and Technical Collection. Radio Components), 1970, vyp. 4(21), pp 3-9 (from RZh-Radiotekhnika, No 5, May 71, Abstract No 5V322)

Translation: The authors discuss a new method of making thin-film ceramic capacitors with high specific capacitance. Their basic electrical characteristics are given.

1/1

APPROVED FOR RELEASE: 08/09/2001 CIA-RDP86-00513R002202720016-9"

"APPROVED FOR RELEASE: 08/09/2001 CIA-RDP86-00513R002202720016-9

USSR

RYNDYK, A. G.

UDC: 621.391.8

"Efficiency of a Three-Stage Pulse Signal Accumulator"

Kiev, Izvestiya VUZ - Radioelektronika. vol. 14, No. 5, 1971, pp 527-531

Abstract: The two-stage pulse signal accumulator is defined as a series connection of two accumulator circuits, each of which is a summing device with positive feedback through an attenuator and a delay circuit operating over quasi-periods T and M_1 of the pulse repetition, M_1 being an integer. Better gain can be achieved by the three-stage accumulator if the number of pulses in the received sequence is very large. The three-stage circuit consists in a series connection of three accumulator circuits, the first stage of which has a delay in its feedback circuit over the quasi-period T, while the second stage has such a delay for the M quasi-period; the third has a delay over a period of MP, where M and P are integers. The two- and three-stage devices are compared, and the gain of the three-stage accumulator is computed.

1/1

APPROVED FOR RELEASE: 08/09/2001 CIA-RDP86-00513R002202720016-9"

"APPROVED FOR RELEASE: 08/09/2001 CIA-RDP86-00513R002202720016-9

UNCLASSIFIED

TITLE—THE PROBLEM OF NEUROLEUCOSIS -U- PROCESSING DATE--30OCT70

AUTHOR-(03)-RYNSKAYA, L.M., BALIKHINA, G.D., TEREKHIN, V.N.

COUNTRY OF INFO—USSR

SOURCE--TERAPEVTICHESKIY ARKHIV, 1970, VOL 42, NR 6, PP 56-60

DATE PUBLISHED———70

SUBJECT AREAS—BIOLOGICAL AND MEDICAL SCIENCES

TOPIC TAGS—LEUKEMIA, ENCEPHALITIS, ANTINEOPLASTIC DRUG

CONTROL MARKING--NO RESTRICTIONS

DOCUMENT CLASS—UNCLASSIFIED

PROXY REEL/FRAME--3002/1926

STEP NO—UR/0504/70/042/006/0056/0060

CIRC ACCESSION NO—AP0129275

UNCLASSIFIED

APPROVED FOR RELEASE: 08/09/2001 CIA-RDP86-00513R002202720016-9"

"APPROVED FOR RELEASE: 08/09/2001 CIA-RDP86-00513R002202720016-9

2/2 019 UNCLASSIFIED

CIRC ACCESSION NO--AP0129275 PROCESSING DATE--30OCT70

ABSTRACT/EXTRACT--(U) GP-0- ABSTRACT. THE AUTHORS DESCRIBED 10 CASES OF NEUROLEUCOSIS OCCURRING IN PATIENTS WITH VARIOUS MORPHOLOGICAL VARIANTS OF ACUTE LEUKEMIA. IN 7 CASES SYMPTOMATOLOGY OF LEUKEMIC MENINGOENCEPHALITIS TOOK PLACE, IN ONE PATIENT, AFFECTION OF CAUDAE EQUINAE, AND IN 2, SPINAL AFFECTION WITH THE INFERIOR PARAPLEGIA AND A DISTURBED FUNCTION OF THE PELVIC ORGANS. ALL THE PATIENTS WERE TREATED WITH INTRALUMBAL INTRODUCTION OF METHOTREXATE. THERAPY PROVED TO BE EFFECTIVE IN FRESH CASES AND AT RELATIVELY EARLY STAGES OF ACUTE LEUKEMIA. THERAPY OF NEUROLEUCOSIS RELAPSES HAS A SMALL VISTA. TREATMENT OF ACUTE LEUKEMIA AT THE TERMINAL STAGE IS COMPLETELY INEFFECTIVE. FACILITY: GRUPPA AKAD. AMN SSSR PROF. I. A. KASSIRSKOGO, TSENTRAL'NAYA KLINICHESKAYA BOL'NITSA NO. 2 MINISTERSTVA PUTEY SOOBSHCHENIYA, MOSKVA.

UNCLASSIFIED

APPROVED FOR RELEASE: 08/09/2001 CIA-RDP86-00513R002202720016-9"

"APPROVED FOR RELEASE: 08/09/2001 CIA-RDP86-00513R002202720016-9

USSR

UDC 621.762

BRYNZA, A. P., OGNEV, R. K., RYNSKAYA, Ye. S., PATRUSHEVA, A. G., KOLOMOYETS, G. G., SOROKINA, Z. Ye., and TER-POGOSYAN, E. D.

"Corrosion of Powder Metallurgy Titanium in a Damp Atmosphere Containing Hydrogen Chloride and in Solutions of Hydrochloric Acid"

Moscow, Metallurgiya i Khimiya Titana (Institut Titana), Metallurgiya Publishing House, Vol 6, 1970, pp 105-111

Translation: The corrosion behavior of powder metallurgy titanium in gases and solutions of hydrochloric acid within the temperature interval 20-80°C is investigated. It is established that at a temperature of 20°C, atmospheric corrosion of powder metallurgy titanium above 3 and 7% solutions of hydrochloric acid is not observed, and in a solution of hydrochloric acid with a concentration up to 10%, slight corrosion is observed after a certain induction period. At 80°C, powder metallurgy titanium corrodes with all concentrations of hydrochloric acid that were studied. The effective energy for activating the process of dissolving titanium specimens is 62.8-71.2 kilojoules per mole. Seven illustrations, one table, and 11 bibliographic entries.

1/1

APPROVED FOR RELEASE: 08/09/2001 CIA-RDP86-00513R002202720016-9"

"APPROVED FOR RELEASE: 08/09/2001 CIA-RDP86-00513R002202720016-9

USSR

POLOVIN, R. V., DEMUTSKIY, V. P. (Physics-Engineering Institute, Ukrainian Academy of Sciences, Khar'kov; Khar'kov State University)

"Nonlinear Excitation of Ion-Sound Waves"

Kiev, Ukrainskiy Fizicheskiy Zhurnal, August 1970, pp 1272-1276

Abstract: The article deals with a non-linear resonance excitation of ion-sound waves by an external electric field, which is supposed to be small. The problem is solved by the Bogolyubov method, which is modified for the case of a system of partial differential equations instead of traditional reduction to ordinary differential equations by means of the Fourier series expansion.

1/1

APPROVED FOR RELEASE: 08/09/2001 CIA-RDP86-00513R002202720016-9"

"APPROVED FOR RELEASE: 08/09/2001 CIA-RDP86-00513R002202720016-9

USSR

UDC 665.534

OSIPOV, L. N., KHAVKIN, V. A., AGAFONOV, A. V., ROGOV, S. P., RYSAKOV, M. V., and PEREZHIGINA, I. Ya., All Union Scientific Research Institute of the Petroleum Industry

"Hydrofining of Sulfur-Containing Secondary Gasolines to Obtain Stock for Catalytic Reforming"

Moscow, Khimiya i Tekhnologiya Topliv i Masel, No 2, 1971, pp 1-3

Abstract: The article describes results of experiments on the hydrofining of thermal-cracked and TCC gasolines, as well as mixtures of these gasolines with straight-run gasoline for the purpose of obtaining stock for catalytic reforming. The experiments were carried out on an apparatus with alumina-cobalt-molybdenum catalyst loading of 0.5 l, a total pressure of 35 at, a temperature of 350-425°C, space velocity 0.5-5.0 hr^{-1}, gas circulation 300 l/l stock. The object of the experiments was to obtain a product containing not more than 0.003 percent sulfur by weight or 0.0002 percent nitrogen by weight, with an iodine number no greater than 1 g I_2/100 g. The results indicate that these gasolines can be successfully improved on existing blocks or units for the preliminary hydrofining of straight-run gasoline L-24-300 following a slight

1/2

APPROVED FOR RELEASE: 08/09/2001 CIA-RDP86-00513R002202720016-9"

"APPROVED FOR RELEASE: 08/09/2001 CIA-RDP86-00513R002202720016-9

USSR

OSIPOV, L. N., et al, Khimiya i Tekhnologiya Topliv i Masel, No 2, 1971, pp 1-3

modification of the design requiring merely a 50-100 percent increase in the loading volume of the alumina-cobalt-molybdenum catalyst.

2/2

APPROVED FOR RELEASE: 08/09/2001 CIA-RDP86-00513R002202720016-9"

"APPROVED FOR RELEASE: 08/09/2001 CIA-RDP86-00513R002202720016-9

USSR

RYSAKOV, V.M., AKATOV, L.L. [Institute Of Semiconductors, Academy Of Sciences, USSR, Leningrad]

UDC 621.315.592

"Dynamics Of Emission Spectrum Of A Semiconductor Gallium Arsenide Laser"

Fizika i tekhnika poluprovodnikov, Vol 6, No 4, Apr 1972, pp 728-730

Abstract: A number of papers discuss the change in time of the emission spectrum of a GaAs crystal laser using pulses with a duration on the order of one microsecond. However, up to now the results of various authors differ somewhat and this effect does not have an unambiguous explanation. In the present work emission of considerably shorter pulses (150 nanosec) is investigated, which makes it possible to obtain some new characteristics of this process. The device used consisted of a GaAs crystal laser (commercial-type diffused laser crystals of type "Kolibr" were used), the temperature of which can be changed in the limits 100--300° K, a pulse supply unit, and a screen monochromator. The resolution of the monochromator is on the order of 1 Å. The investigations were conducted with currents across the crystal of 30--100 a, i.e, close to those ordinarily used in standard semiconductor lasers, considerably exceeding the threshold. The results obtained (linear dependence of the speed of motion on the current and presence of two relaxation times) show that with short pulses, even with large currents, heating up of the crystal by Joule heat is not a basic

1/2

APPROVED FOR RELEASE: 08/09/2001 CIA-RDP86-00513R002202720016-9"

"APPROVED FOR RELEASE: 08/09/2001 CIA-RDP86-00513R002202720016-9

USSR

RYSAKOV, V.M., et al, Fizika i tekhnika poluprovodnikov, Vol 6, No 4, Apr 1972, pp 728-730

process which determines the frequency shift of the laser emission in time. Joule heat determines the frequency shift with durations on the order of several microseconds; however, with small currents and with such durations, the shift is linear. The mechanism of the strong frequency shift which was observed during use of short pulses is not yet clear, but the small relaxation time makes it possible to assume that it has an electronic character. The phenomenon requires further experimental and theoretical investigation. 3 fig. 4 ref. Received by editors, 18 May 1971; in final rewording, 8 July 1971.

2/2

APPROVED FOR RELEASE: 08/09/2001 CIA-RDP86-00513R002202720016-9"

"APPROVED FOR RELEASE: 08/09/2001 CIA-RDP86-00513R002202720016-9

USSR

UDC 633.51:631.524.86

MIRPULATOVA, N. S., KAMILOVA, M. Kh., RYSBAYEVA, A. S., NAGORNAYA, N. M., and TESHABEYEVA, R., Scientific Research Institute of Plant Protection, All Union Academy of Agricultural Sciences imeni V. I. Lenin

"Maintaining Resistance to Verticillium Wilt in Cotton Strains"

Moscow, Selektsiya i Semenovodstvo, No 5, Sep/Oct 71, pp 12-15

Abstract: Verticillium dahliae grows readily in the soil of Uzbekistan and destroys large amounts of cotton. To bring the situation under control, wilt-resistant cotton strains should be grown on threatened fields. On cotton farms, the sowing of cotton should alternate with the sowing of alfalfa, which is resistant to this fungus and inhibits its growth. After harvest, the fields should be cleared of all residual weeds to prevent proliferation of the fungus. All instructions on fertilization should be strictly observed to harvest healthier, more resistant seeds. Similarly, sprays should be applied at the right time (which varies for the various strains of cotton). Before seeds are collected, all wilted plants should be removed from the field. To prevent infection during transport, all

1/2

APPROVED FOR RELEASE: 08/09/2001 CIA-RDP86-00513R002202720016-9"

"APPROVED FOR RELEASE: 08/09/2001 CIA-RDP86-00513R002202720016-9

USSR

MIRPULATOVA, N. S., et al., Selektsiya i Semenovodstvo, No 5, Sep/Oct 71, pp 12-15

seeds must be pretreated prior to shipment. All waste material must be burned, and the highest sanitary standards should be enforced on cotton farms.

2/2

APPROVED FOR RELEASE: 08/09/2001 CIA-RDP86-00513R002202720016-9"

"APPROVED FOR RELEASE: 08/09/2001 CIA-RDP86-00513R002202720016-9

USSR

UDC 581.51:576.3

RYSBAYEVA, A. S., Candidate of Biological Sciences, Scientific Research Institute of Plant Protection

"Ultrafine Structural Characteristics of Cells of Fungus Verticillium dahliae Klebahn"

Moscow, Doklady Vsesoyuznoy Ordena Lenina Akademii Selskokhozyaystvennykh Nauk imeni V. I. Lenina, No 2, Feb 71, pp 24-25

Abstract: The high mutability of V. dahliae fungus reported by various authors is due to the different approaches and methods used for its study. A modified Laft method was used in this work for fixation and preparation of fungus and bacterial material. A linear microscopic section of the fungus conidium with a clearly defined three-dimensional shell was obtained. The outer layer is a fatty shell, the inner layer is rich in carbohydrates. The thinnest, innermost layer of the cell, which is adjacent to the plasma, has a high electron density.

1/1

APPROVED FOR RELEASE: 08/09/2001 CIA-RDP86-00513R002202720016-9"

"APPROVED FOR RELEASE: 08/09/2001 CIA-RDP86-00513R002202720016-9

USSR

MAL'TO, V. I., SHADURSKIY, G. P., KAYBANOV, S. G., UTLIK, A. F., RYSEVETS, V. A.

UDC: 621.396.6-181.48

"Organization of Preventive Inspection of Photorepeaters"

Elektron. prom-st'. Nauch.-tekhn. sb. (The Electronics Industry. Scientific and Technical Collection), 1972, No 1, pp 99-100 (from RZh-Radiotekhnika, No 8, Aug 72, Abstract No 8V264)

Translation: A structure is proposed for the organization of services in an enterprise for carrying out preventive maintenance on photorepeaters. Resumé.

1/1

APPROVED FOR RELEASE: 08/09/2001 CIA-RDP86-00513R002202720016-9"

"APPROVED FOR RELEASE: 08/09/2001 CIA-RDP86-00513R002202720016-9

009

UNCLASSIFIED

TITLE--INFLUENCE OF VARIOUS ADDITIVES AND THE DEGREE OF DISPERSION OF SILICA CONTAINING COMPONENTS ON THE MOLDING AND DRYING OF FAIENCE SOLIDS

PROCESSING DATE--23OCT70

AUTHOR-(02)-RYSHCHENKO, M.I., LIVSON, A.A.

COUNTRY OF INFO--USSR

SOURCE--STEKLO KERAM. 1970, 27(2), 36-8

DATE PUBLISHED-------70

SUBJECT AREAS--CHEMISTRY

TOPIC TAGS--SILICA, PHOSPHATE, SODIUM COMPOUND

CONTROL MARKING--NO RESTRICTIONS

DOCUMENT CLASS--UNCLASSIFIED

PROXY REEL/FRAME--1996/1959

STEP NO--UR/0072/70/027/002/0036/0038

CIRC ACCESSION NO--AP0118919

UNCLASSIFIED

APPROVED FOR RELEASE: 08/09/2001 CIA-RDP86-00513R002202720016-9"

"APPROVED FOR RELEASE: 08/09/2001 CIA-RDP86-00513R002202720016-9

CIRC ACCESSION NO--AP0118919 UNCLASSIFIED

PROCESSING DATE--23OCT70

ABSTRACT/EXTRACT--(U) GP-0- ABSTRACT. THE PRESENT WORK WAS UNDERTAKEN TO STUDY THE EFFECT OF THE NATURE AND THE DEGREE OF DISPERSION OF SILICA CONTG. COMPONENTS, ADDNS. OF NA PYROPHOSPHATE, THE PETROV CATALYST (SURFACE ACTIVE MIXT. CONTG. NAPHTHENE AND ALKYL ARYLSULFONIC ACIDS), AND THE BENTONITE ON THE POST PRESSING EXPANSION OF FAIENCE POWDERS DURING THEIR PRESSING. THE WATER EMISSION PROCESS DURING THE DRYING OF THE SAMPLES MADE OF FAIENCE BODIES, INTO THE COMPN. OF WHICH THERE WAS INTRODUCED A SILICA CONTG. COMPONENT DIFFERENT IN NATURE AND THE DEGREE OF DISPERSION, WAS ALSO STUDIED. THE BODIES TO BE STUDIED WERE PREPD. BY THE CLINKER TECHNIQUE. THE PRESSING POWDERS OBTAINED WERE SIEVED THROUGH A SIEVE CONTG. 64 HOLES-CM PRIME2. THE SAMPLES FOR THE VARIOUS TESTS WERE PRESSED AT A PRESSURE OF 225 KG-CM PRIME2 AND A POWDER MOISTURE OF 9.5PERCENT. THE RESULTS SHOW THAT WITH INCREASING AMT. OF THE SILICA CONTG. COMPONENT PRESENT THE TOTAL VALUE OF THE POST PRESSING EXPANSION INCREASES SOMEWHAT. THIS CAN, TO SOME DEGREE, BE EXPLAINED BY THE PRESENCE OF COMPRESSED AIR, THE REMOVAL OF WHICH FROM MORE DISPERSED BODIES IS DIFFICULT. A MORE EFFECTIVE ADDN. IS NA POLYPHOSPHATE. THE DECREASE IN THE POSTPRESSING EXPANSION VALUE UPON THE INTRODUCTION OF THE PETROV CONTACT CAN BE EXPLAINED PRIMARILY BY THE HYDROPHOBIZATION OF THE SURFACE OF THE PARTICLES OF THE PRESSING POWDER. ON THE BASIS OF THE RESULTS OBTAINED IT IS CONCLUDED THAT THE OPTIMUM ADDNS. REDUCING THE POST PRESSING EXPANSION VALUE DURING THE PRESSING OF FAIENCE POWDERS ARE THE FOLLOWING: BENTONITE 3, NA POLYPHOSPHATE 0.05, AND PETROV CATALYST 0.05-0.1PERCENT. THE MOST EFFECTIVE IS THE BENTONITE ADDN.

UNCLASSIFIED

APPROVED FOR RELEASE: 08/09/2001 CIA-RDP86-00513R002202720016-9"

"APPROVED FOR RELEASE: 08/09/2001 CIA-RDP86-00513R002202720016-9

3/3 009 UNCLASSIFIED PROCESSING DATE--23OCT70

CIRC ACCESSION NO--AP0118919

ABSTRACT/EXTRACT--WITH INCREASING DEGREE OF DISPERSION OF THE SILICA CONTG. COMPONENTS IN THE COMPN. OF THE FAIENCE BODIES, THE POST PRESSING EXPANSION SOMEWHAT INCREASES AND THE REMOVAL OF MOISTURE DURING DRYING BECOMES MORE DIFFICULT. FACILITY: KHAR'KOV. POLITEKH. INST. IM. LENINA, KHARKOV, USSR.

UNCLASSIFIED

APPROVED FOR RELEASE: 08/09/2001 CIA-RDP86-00513R002202720016-9"

"APPROVED FOR RELEASE: 08/09/2001 CIA-RDP86-00513R002202720016-9

I. [redacted]019 UNCLASSIFIED PROCESSING DATE--18SEP70

ITLE--GASTROSCOPY IN THE DIAGNOSIS OF GASTROINTESTINAL HEMORRHAGES -U-

UTHOR-(05)-STRUCHKOV, V.I., SOKOLOV, L.K., LUTSEVICH, E.V., BELOV, I.N., RYSHIKOV, V.N.

OUNTRY OF INFO--USSR

OURCE--KHIRURGIYA, 1970, NR 3, PP 59-64

ATE PUBLISHED--------70

UBJECT AREAS--BIOLOGICAL AND MEDICAL SCIENCES

OPIC TAGS--DIAGNOSTIC METHODS, HEMORRAGE, BIOPSY, DIGESTIVE SYSTEM DISEASE

ONTROL MARKING--NO RESTRICTIONS

OCUMENT CLASS--UNCLASSIFIED

ROXY REEL/FRAME--1983/1320 STEP NO--UR/0531/70/000/003/0059/0064

IRC ACCESSION NO--AP0054204

UNCLASSIFIED

APPROVED FOR RELEASE: 08/09/2001 CIA-RDP86-00513R002202720016-9"

"APPROVED FOR RELEASE: 08/09/2001 CIA-RDP86-00513R002202720016-9

2/2 [redacted]019 UNCLASSIFIED PROCESSING DATE--18SEP70

IRC ACCESSION NO--AP0054204

BSTRACT/EXTRACT--(U) GP-0- ABSTRACT. THE AUTHORS CARRIED OUT GASTROSCOPIC INVESTIGATION IN 101 PATIENTS SUFFERING FROM GASTROINTESTINAL HEMORRHAGE OF DIVERSE ETIOLOGY. AN EARLY COMPLEX (CLINICO ROENTGENO ENDOSCOPIC) INVESTIGATION ENABLED TO REVEAL THE ORIGIN OF HEMORRHAGE IN 92 PATIENTS. ONLY ENDOSCOPICALLY THE SOURCE OF HEMORRHAGE WAS DISCLOSED IN 36 CASES. OF PARTICULAR IMPORTANCE ARE INVESTIGATIONS INVOLVING THE EMPLOYMENT OF NEW DESIGNS OF GASTROFIBROSCOPES WITH A DEVICE FOR CONTROLLED FLEXION OF THE DISTAL END OF THE APPARATUS AND AIMED BIOPSY. THE AUTHORS ARE OF THE OPINION THAT THE DATA DERIVED ARE PROOF OF THE EXPEDIENCY AND EFFECTIVENESS OF USING EMERGENCY GASTROSCOPY AT THE PEAK OF GASTROINTESTINAL HEMORRHAGE OR AT EARLY PERIODS AFTER ITS CESSATION. THE REFERRED TO EXPERIENCE TESTIFIES TO THE FACT THAT GASTROSCOPY IN GASTRIC HEMORRHAGE DOES NOT AGGRAVATE THE STATE OF PATIENTS. THE HAZARD OF GASTROSCOPY IN HEMORRHAGES IS EXAGERATED.

UNCLASSIFIED

APPROVED FOR RELEASE: 08/09/2001 CIA-RDP86-00513R002202720016-9"

"APPROVED FOR RELEASE: 08/09/2001 CIA-RDP86-00513R002202720016-9

Microbiology

USSR UDC 576.851.45.097.22:615.33

MISHAN'KIN, B. N., DOMARADSKIY, I. V., and RYSHKO, I. V., Rostov-on-Don Scientific Research Antiplague Institute

"Inactivation by Phosphorylation of Aminoglycoside Antibiotics by the EB Strain of Pasteurella pestis Carrying an Episome of Multiple Drug Resistance"

Moscow, Antibiotiki, No 12, 1971, pp 1081-1085

Abstract: The EB-R_6 strain of P. pestis to which an episome of multiple drug resistance was transmitted from E. coli (strain 4018/62 R_6) was able to inactivate the aminoglycoside antibiotics streptomycin, monomycin, kanamycin, and neomycin. This did not occur when extracts from the original EB strain or a variant with chromosomal resistance to the antibiotics was used instead of extracts from EB-R_6 cells. To test the assumption that phosphorylation was the cause of inactivation of the antibiotics, antibiotics were treated with 1 mg of alkaline phosphatase. Some 50% of the activity of kanamycin, monomycin, and streptomycin and 20% of that of neomycin were restored after 18 hours of incubation at 37°C.

1/1

APPROVED FOR RELEASE: 08/09/2001 CIA-RDP86-00513R002202720016-9"

"APPROVED FOR RELEASE: 08/09/2001 CIA-RDP86-00513R002202720016-9

USSR UDC 623.375.057

RYSIN, V. S.

"Analysis of Electronic Circuits Containing Controllable Sources"

Avtomatiz. proyektir. v elektron. Resp. mezhved. nauch.-tekhn. sb. (Design Automation in Electronics. Republic Interdepartmental Scientific and Technical Collection), vyp. 2, Kiev, "Tekhnika", 1970, pp 34-41

Abstract: A method is presented for determining the secondary parameters of electronic circuits containing all four types of controllable sources. The method is based on using a determinant and the algebraic complements of the matrix of the passive circuit. By using passages to limits, the author went from a controllable source of the first type to the other three types of non-autonomous two-terminal pair networks. Five illustrations, bibliography of five titles.

1/1

APPROVED FOR RELEASE: 08/09/2001 CIA-RDP86-00513R002202720016-9"

"APPROVED FOR RELEASE: 08/09/2001 CIA-RDP86-00513R002202720016-9

USSR

UDC: 621.375.82

IVLEV, YE. I., RYSIN, V. V., KUBAREV, A. V.

"Differential Series-Parallel Device for Measurement of High and Moderate Laser Radiation Levels"

Dokl. Nauchno-Tekhn. Seminara. Metrol. V Radioelektron. Tezisy Ch. 1 [Reports of Scientific and Technical Seminar, Metrology in Electronics, Summaries, Part I], Moscow, 1970, pp 123-129, (Translated from Referativnyy Zhurnal Fizika, No. 8, 1970, Abstract #8D1164, by V. P. Veyko).

Translation: A calorimetric laser radiation and power meter is described. Parallel connection of the measuring and calibrating inputs assures high measurement accuracy. The meter can be used over a wide range of wave lengths in the visible and IR spectra. Power levels of 1-100 w can be measured. The errors in the device, which vary from 3-6% depending on the power level measured, are studied in detail.

APPROVED FOR RELEASE: 08/09/2001 CIA-RDP86-00513R002202720016-9"

"APPROVED FOR RELEASE: 08/09/2001 CIA-RDP86-00513R002202720016-9

USSR

UDC: 621.373:530.145.6:621.317.17

IVLEV, Ye. I., RYSIN, V. V., KUBAREV, A. V.

"Differential Series-Parallel Measuring Device for High and Moderate Laser Emission Levels"

Dokl. Nauchno-tekhn. seminara "Metrol. v radioelektron." Tezisy. Ch. 1 (Reports of the Scientific and Technical Seminar on Metrology in Radio Electronics. Summaries, Part 1), Moscow, 1970, pp 123-129 (from RZh-Radiotekhnika, No 7, Jul 70, Abstract No 7D247)

Translation: A block diagram is given for a series-parallel meter; the measurement procedure is described and the measurement error is analyzed. The meter may operate both in the visible and in the near infrared regions; the interval of measurable power levels is 1-100 W. A. K.

1/1

APPROVED FOR RELEASE: 08/09/2001 CIA-RDP86-00513R002202720016-9"

"APPROVED FOR RELEASE: 08/09/2001 CIA-RDP86-00513R002202720016-9

USSR UDC 534.84

KATUNIN, G. P., RYSIN, YU. S.

"Comparison of Certain Methods of Measuring the Time of a Reverberation

Tr. uchebn. in-tov svyazi. M-vo svyazi SSSR (Works of the Educational Institute of Communication. Ministry of Communications USSR), 1971, No. 53, pp 173-176 (from RZh-Fizika, No 3, Mar 72, Abstract No 3Zh567)

Translation: Various methods of determining the time of a reverberation are compared. A method in which the sound source is the shot of a starter pistol is recommended on the basis of the results. The reverberation is recorded on a magnetic recorder over the entire spectrum. The interpretation is conducted under laboratory conditions. Resume.

1/1

APPROVED FOR RELEASE: 08/09/2001 CIA-RDP86-00513R002202720016-9"

"APPROVED FOR RELEASE: 08/09/2001 CIA-RDP86-00513R002202720016-9

USSR

UDC 669.285'725'296:669.275'725.296

PANOV, A. S., and RYSINA, M. M., Moscow

"Kinetics of Solid-Phase Reactions in Systems Mo-Be-Zr and W-Be-Zr"

Moscow, Izvestiya Akademii Nauk SSSR, Metally, No 1, Jan-Feb 1970, pp 202-205

Abstract: This paper is the continuation of an investigation of solid phase reactions in complex systems of the type Me_I-Be-Me_{II}. A study was made of the solid-phase interaction of tungsten and molybdenum with zirconium beryllide at 900-1500° C. It was assumed that, in the case of tungsten, at 900-1150° C the process of interaction is limited by the kinetic phase, and at 1200-1400° C by the diffusion phase. For molybdenum, the process is limited by the kinetic phase in the entire temperature interval 900-1400° C. The energy of activation of the process of growth of the WBe_2 layer or tungsten for the kinetic phase is 32.2 kcal/mol and for the diffusion phase -- 22.67 kcal/mol. The energy of activation of the process of growth of $MoBe_2$ on molybdenum for the kinetic phase is 27.7 kcal/mol. It is shown that in all cases the rate of layer growth depends on temperature and time.

1/1

APPROVED FOR RELEASE: 08/09/2001 CIA-RDP86-00513R002202720016-9"

"APPROVED FOR RELEASE: 08/09/2001 CIA-RDP86-00513R002202720016-9

1/2 045 UNCLASSIFIED PROCESSING DATE--11SEP70

TITLE--KINETICS OF SOLID PHASE REACTIONS IN MOLYBDENUM, BERYLLIUM AND ZIRCONIUM AND TUNGSTEN, BERYLLIUM AND ZIRCONIUM SYSTEMS -U-

AUTHOR--PANOV, A.S., RYSINA, M.M.

R

COUNTRY OF INFO--USSR

SOURCE--IZV. AKAD. NAUK SSSR, METAL. 1970, (1), 202-5

DATE PUBLISHED--------70

SUBJECT AREAS--MATERIALS

TOPIC TAGS--CHEMICAL REACTION KINETICS, MOLYBDENUM, BERYLLIUM, ZIRCONIUM, TUNGSTEN, CRYSTAL LATTICE STRUCTURE, CRYSTALLIZATION, ACTIVATION ENERGY

CONTROL MARKING--NO RESTRICTIONS

DOCUMENT CLASS--UNCLASSIFIED

PROXY REEL/FRAME--1988/0536 STEP NO--UR/0370/70/000/001/0202/0205

CIRC ACCESSION NO--AP0105521

UNCLASSIFIED

APPROVED FOR RELEASE: 08/09/2001 CIA-RDP86-00513R002202720016-9"

"APPROVED FOR RELEASE: 08/09/2001 CIA-RDP86-00513R002202720016-9

2/2 045 UNCLASSIFIED PROCESSING DATE--11SEP70

CIRC ACCESSION NO--AP0105521

ABSTRACT/EXTRACT--(U) GP-0- ABSTRACT. THE INTERACTION OF W AND MO WITH THE INTERMETALLIC COMPD. ZRBE SUB13 WAS STUDIED AT 900-1500DEGREES ON SAMPLES 10 MM LONG AND 3 MM THICK. IN THE CONTACT ZONE A NEW PHASE WAS FORMED WITH A HCP. STRUCTURE WITH LATTICE PARAMETERS A EQUALS 4.43 PLUS OR MINUS 0.01 AND C EQUALS 7.31 PLUS OR MINUS 0.01 ANGSTROM FOR W AND A EQUALS 4.48 PLUS OR MINUS 0.01 AND C EQUALS 7.37 PLUS OR MINUS 0.01 ANGSTROM FOR MO. THE MICROHARDNESSES OF THE PHASES FORMED ON W AND MO WERE 2140-2290 AND 1680 KG-MM PRIME2 AT A LOAD OF 100 G. THESE RESULTS INDICATE COMPNS. OF WBE SUB2 AND MOBE SUB2. THESE PHASES GREW FROM THE SIDE OF THE HIGH MELTING METAL. THE INTERACTION TAKES PLACE IN THE FOLLOWING STAGES: DIFFUSION OF BE THROUGH ZRBE SUB13 AND ITS APPROACH TO THE CONTACT BOUNDARY: DISSOCN. OF ZR BERYLLIDE NEAR THE INTERFACE; FORMATION OF MO OR W BERYLLIDE BY THE REACTION M PLUS 2BE YIELDS MBE SUB2; DIFFUSION OF BE, W, AND MO THROUGH THE BERYLLIDE FORMED; AND DIFFUSION OF BE INTO W OR MO WITH THE FORMATION OF A SOLID SOLN. AT 1200-1500DEGREES THE GROWTH RATE OF THE WBE SUB2 LAYER IS LIMITED BY THE DIFFUSION RATE OF BE THROUGH WBE SUB2 AND PERHAPS BE OR ZR THROUGH ZRBE SUB13. AT LOW TEMPS. THE PROCESS IS KINETICALLY CONTROLLED. THE ACTIVATION ENERGIES WERE CALCD. TO BE 32.2 (KINETIC STAGE) AND 22.67 (DIFFUSION STAGE) KCAL-MOLE FOR WBE SUB2 AND 27.7 KCAL-MOLE (KINETIC STAGE) FOR MOBE SUB2.

APPROVED FOR RELEASE: 08/09/2001 CIA-RDP86-00513R002202720016-9"

"APPROVED FOR RELEASE: 08/09/2001 CIA-RDP86-00513R002202720016-9

UDC 539.4

USSR

TAVER, Ye. I., RYSKIN, A. N., KOPYLOV, A. K., SIDOROV, N. G., KRICHEVSKIY, Ye. Yu., SUKHOTIN, A. M., ANTROPOV, N. P., ANTONOVSKAYA, E. I., Leningrad

"Strength of Welded Joints in High-Strength Stainless Steels at Cryogenic Temperatures"

Kiev, Problemy Prochnosti, No 6, 1972, pp 93-96.

Abstract: The influence of the geometry of welded seam made by austenitic wire on the strength of welded joints of martensitic stainless steels at cryogenic temperatures is studied. The influence of technological defects (such as under- and overheating) on strength of welded joints of two types of steels at low temperatures is studied. It is established that designers must consider both reduced strength of seam metal under normal conditions and impermissibility of any stress concentrators in the seam zone.

1/1

APPROVED FOR RELEASE: 08/09/2001 CIA-RDP86-00513R002202720016-9"

"APPROVED FOR RELEASE: 08/09/2001 CIA-RDP86-00513R002202720016-9

UDC: 621.391:519.2

USSR

GUSYATINSKIY, I. A., RYSKIN, E. A.

"Analysis of the Interference Resistance of a Demodulator With Frequency Feedback"

V sb. Metody pomekhoustoychivogo priyema ChM i FM (Methods of Interference-Free FM and PM Reception--collection of works), Moscow, "Sov. radio", 1970, pp 88-96 (from RZh-Radiotekhnika, No 12, Dec 70, Abstract No 12A45)

Translation: The authors determine the analytical relationship between the input and output signal-to-noise ratios of an FM demodulator with frequency feedback. The results are compared with experimental data published in the works of other authors. Resumé.

1/1

APPROVED FOR RELEASE: 08/09/2001 CIA-RDP86-00513R002202720016-9"

"APPROVED FOR RELEASE: 08/09/2001 CIA-RDP86-00513R002202720016-9

1/2 033 UNCLASSIFIED PROCESSING DATE--04DEC70

TITLE--STRENGTH OF NEEDLE SHAPED SINGLE CRYSTALS OF POLY,OXYMETHYLENE -U-

AUTHOR-(02)-RYSKIN, V.S., SLUTSKER, A.I.

COUNTRY OF INFO--USSR

SOURCE--MEKH. POLIM: 1970, 6(2), 266-70

DATE PUBLISHED--------70

SUBJECT AREAS--CHEMISTRY

TOPIC TAGS--SINGLE CRYSTAL, TRIOXANE, POLYMERIZATION, TENSILE STRENGTH, POLYOXYMETHYLENE

CONTROL MARKING--NO RESTRICTIONS

DOCUMENT CLASS--UNCLASSIFIED

PROXY FICHE NO-----FD70/605014/803 STEP NO--UR/0374/70/006/002/0266/0270

CIRC ACCESSION NO--AP0140446

UNCLASSIFIED

APPROVED FOR RELEASE: 08/09/2001 CIA-RDP86-00513R002202720016-9"

"APPROVED FOR RELEASE: 08/09/2001 CIA-RDP86-00513R002202720016-9

2/2 033 UNCLASSIFIED PROCESSING DATE--04DEC70

CIRC ACCESSION NO--AP0140446

ABSTRACT/EXTRACT--(U) GP-0- ABSTRACT. PHYS. TESTS OF POLY(OXYMETHYLENE) NEEDLELIKE SINGLE CRYSTALS ("WHISKERS"), OBTAINED BY DIRECTED POLYMN OF TRIOXANE IN THE PRESENCE OF BF SUB3 OR SNCL SUB4, SHOWED THAT THEY HAVE HIGH TENSILE STRENGTH (200-350 KG-CM PRIME2) AND RIGIDITY.

FACILITY: FIZ. TEKH. INST. IM. IOFFE, LENINGRAD, USSR.

UNCLASSIFIED

APPROVED FOR RELEASE: 08/09/2001 CIA-RDP86-00513R002202720016-9"

"APPROVED FOR RELEASE: 08/09/2001 CIA-RDP86-00513R002202720016-9

UNCLASSIFIED PROCESSING DATE--20NOV70

1/2 022

TITLE--GELATICN OF POLY,VINYL CHLORIDE -U-

AUTHOR-(02)-RYSKINA, I.I., AVERYANOVA, V.M.

CCUNTRY OF INFO--USSR

SOURCE--IZV. VYSSH. UCHEB. ZAVED., KHIM. KHIM. TEKHNOL. 1970, 13(1), 59-61

DATE PUBLISHED--------70

SUBJECT AREAS--CHEMISTRY, MATERIALS

TOPIC TAGS--GELATICN, POLYVINYL CHLORIDE, ELASTICITY, MELTING POINT

CONTROL MARKING--NO RESTRICTIONS

DOCUMENT CLASS--UNCLASSIFIED

PROXY REEL/FRAME--3005/0178 STEP NO--UR/0153/70/013/001/0059/0061

CIRC ACCESSICN NO--AT0132455

UNCLASSIFIED

APPROVED FOR RELEASE: 08/09/2001 CIA-RDP86-00513R002202720016-9"

"APPROVED FOR RELEASE: 08/09/2001 CIA-RDP86-00513R002202720016-9

UNCLASSIFIED PROCESSING DATE--20NOV70

2/2 022

CIRC ACCESSION NO--AT0132455

ABSTRACT/EXTRACT--(U) GP-0- ABSTRACT. THE GELATION OF POLY(VINYL CHLORIDE) (I) (OF VISCOSITY AV. MOL. WT. 35,000) WAS STUDIED IN CLCH SUB2 CH SUB2 CL AT ROOM TEMP. A METHOD WAS DEVELOPED FOR DETG. THE M.P. OF I GELS BY EXTRAPOLATING THE MAX. ELASTICITY VS. ABS. TEMP. THE CALCD. M.P., THE GELATION TEMP., AND TEMP. DEPENDENT HYSTERESIS SUGGESTED THAT THE ORIENTED REGIONS OF I WERE CROSSLINKED. THE ACTIVATION ENERGY OF VISCOUS FLOW WAS DETD. FACILITY: SARATOV. GOS. UNIV. IM. CHERNYSHEVSKOGO, SARATOV, USSR.

UNCLASSIFIED

APPROVED FOR RELEASE: 08/09/2001 CIA-RDP86-00513R002202720016-9"

"APPROVED FOR RELEASE: 08/09/2001 CIA-RDP86-00513R002202720016-9

1/2 019 UNCLASSIFIED PROCESSING DATE--27NOV70

TITLE--X RAY DIFFRACTION STUDY OF 3CAO.FE SUB2 O SUB3 .2SIO SUB2 .2H SUB2 O -U-

AUTHOR-(02)-RYSKINA, L.I., KLYUCHNIKOV, YU.F.

COUNTRY OF INFO--USSR

SOURCE--TR. INST. MET. OBOGASHCH., AKAD. NAUK KAZ. SSR 1970, 37, 42-4

DATE PUBLISHED--------70

SUBJECT AREAS--PHYSICS, EARTH SCIENCES AND OCEANOGRAPHY

TOPIC TAGS--GARNET, X RAY ANALYSIS, CRYSTAL LATTICE STRUCTURE

CONTROL MARKING--NO RESTRICTIONS

DOCUMENT CLASS--UNCLASSIFIED

PROXY REEL/FRAME--3006/0580 STEP NO--UR/0000/70/037/000/0042/0044

CIRC ACCESSION NO--AT0134345

UNCLASSIFIED

APPROVED FOR RELEASE: 08/09/2001 CIA-RDP86-00513R002202720016-9"

"APPROVED FOR RELEASE: 08/09/2001 CIA-RDP86-00513R002202720016-9

2/2 019 UNCLASSIFIED PROCESSING DATE--27NOV70

CIRC ACCESSION NO--AT0134345

ABSTRACT/EXTRACT--(U) GP-0- ABSTRACT. USING DEBYE-SCHERRER AND POWDER DIFFRACTOMETER DATA TOGETHER WITH D. MEASUREMENTS, THE STRUCTURAL PROPERTIES OF 3CAO.FE SUB2 O SUB3 .2SIO SUB2 .2H SUB2 O COMPD. ARE ESTABLISHED. THE PHASE HAS A BCC. LATTICE WITH PARAMETER A EQUALS 12.286 PLUS OR MINUS 0.005 ANGSTROM AND Z EQUALS 8. WITH RESPECT TO THE X RAY DATA OBTAINED, STRUCTURE OF THE TITLE COMPD. IS VERY CLOSE TO THAT OF GARNETS.

UNCLASSIFIED

APPROVED FOR RELEASE: 08/09/2001 CIA-RDP86-00513R002202720016-9"

"APPROVED FOR RELEASE: 08/09/2001 CIA-RDP86-00513R002202720016-9

1/2 017 UNCLASSIFIED PROCESSING DATE--09OCT70

TITLE--SOLUBILITY OF NITROGEN IN MOLTEN ALLOYS OF THE IRON,CHROMIUM,MANGANESE,SILICON SYSTEM -U-

AUTHOR-(02)-NIZHELSKIY, P.YE., RYSKINA, S.G.

R

COUNTRY OF INFO--USSR

SOURCE--IZV. VYSSH. UCHEB. ZAVED., CHERN. MET. 1970, 13(1), 56-60

DATE PUBLISHED--------70

SUBJECT AREAS--MATERIALS

TOPIC TAGS--IRON ALLOY, MANGANESE ALLOY, SILICON ALLOY, CHROMIUM STEEL, NITROGEN, SOLUBILITY, ENTHALPY

CONTROL MARKING--NO RESTRICTIONS

DOCUMENT CLASS--UNCLASSIFIED

PROXY REEL/FRAME--1981/0599 STEP NO--UR/0148/70/013/001/0056/0060

CIRC ACCESSION NO--AT0050606

UNCLASSIFIED

APPROVED FOR RELEASE: 08/09/2001 CIA-RDP86-00513R002202720016-9"

"APPROVED FOR RELEASE: 08/09/2001 CIA-RDP86-00513R002202720016-9

2/2 017 UNCLASSIFIED PROCESSING DATE--09OCT70

CIRC ACCESSION NO--AT0050606

ABSTRACT/EXTRACT--(U) GP-0- ABSTRACT. A STEEL CONTG. CR 20 AND MN 10PERCENT WAS TREATED WITH SI 0-6PERCENT, AND THE EFFECTS OF PRESSURE, TEMP., AND COMPN. ON THE SOLY. OF N WERE DETD. THE SOLY. OF N WAS LINEAR TO RHO SUBN PRIMEONE HALF. INCREASED SI WAS ACCOMPANIED BY A REDN. IN N CONTENT FOR A GIVEN PRESSURE; N WAS MORE SOL. IN THE ALLOY PLUS 6PERCENT SI THAN IN PURE IRON PLUS 6PERCENT SI. THE MEASUREMENT TEMP. WAS 1600-2000DEGREES AND THE PRESSURE RANGES WAS 400-745 TORR. THE ENTHALPY OF DISSOLN. IN THE ABSENCE OF SI WAS MINUS 17,300 CAL-MOLE, FALLING CONTINUOUSLY TO MINUS 10,350 IN THE PRESENCE OF 6PERCENT SI.

UNCLASSIFIED

APPROVED FOR RELEASE: 08/09/2001 CIA-RDP86-00513R002202720016-9"

"APPROVED FOR RELEASE: 08/09/2001 CIA-RDP86-00513R002202720016-9

USSR

UDC 615.281:547.734

VAKHREYEVA, K. I., LIPKIN, A. Ye., RYSKINA, T. B., and SKACHKOVA, N. I., Kuybyshev Polytechnical Institute imeni V.V. Kuybyshev

"Synthesis of Azomethine Bases of the 2,2'-Bithiophene Series with Potential Biological Activity. Communication II."

Moscow, Khimiko-Farmatsevticheskiy Zhurnal, No 3, 1973, pp 24-28

Abstract: Azomethine bases with nitro groups in the bithiophene portion of the molecule were synthesized to study the effects of the nitro groups on the antimicrobial activity of the more complex 2,2'-bithiophene derivatives. Nitration of 5-formyl-2,2'-bithiophene with cupric nitrate in acetic anhydride resulted in the formation of a mixture of 5-formyl-5'-nitro- and 5-formyl-3'-nitro-2,2'-bithiophene diacetates, hydrolysis of which gave 5-formyl-5'-nitro-2,2'-bithiophene (I) and 5-formyl-3'-nitro-2,2'-bithiophene (II). Reaction of I and II with aromatic amines, aminophenols, and aromatic acids resulted in the formation of azomethine bases, the structures of which were confirmed by chemical analyses and IR spectra. The most potent antibacterial activity was exhibited by the 3-carboxyphenyl (3'-NO_2) derivative which, at a concentration of 250 μg/ml of solid medium was bacteriocidal for pathogenic pneumococci and straphylococci, and at a concentration of 400 μg/ml was bactericidal for Shigella sonnei and Sh. flexneri.

1/1

APPROVED FOR RELEASE: 08/09/2001 CIA-RDP86-00513R002202720016-9"

"APPROVED FOR RELEASE: 08/09/2001 CIA-RDP86-00513R002202720016-9

USSR

UDC 517.9

BIYBOSUNOV, I., RYSKULOV, A., Frunze

"Numerical Solution of the Generalized Problem of Near Sonic Gas Flow Around a Body"

Kazan', Izvestiya VUZov: Matematika, No 8(135), Aug 73, pp 8-14

Abstract: When a stream of gases flows around a body at a high subsonic velocity, localized regions of supersonic velocities are set up near the body if the velocity of the oncoming flow is sufficiently great. These regions are bounded downstream by compression shocks which terminate within the flow. In this paper the method of straight lines is used to find an approximate solution of the problem of flow around a profile where the localized supersonic zone is closed downstream by a straight compression shock. Cases of absence of circulation are examined. The solution is found for symmetric and asymmetric flow around a profile. The numerical solution gives a profile very close to a rhombus with slight rounding on the sides. The authors thank S. V. Fal'kovich for constructive criticism.

1/1

APPROVED FOR RELEASE: 08/09/2001 CIA-RDP86-00513R002202720016-9"

"APPROVED FOR RELEASE: 08/09/2001 CIA-RDP86-00513R002202720016-9

USSR

UDC 546.26:118.07

RYSKULOV, T., BEYSHEKEYEV, ZH., KOZHAKHMETOVA, R., DZHUNDUBAYEV, K., and ASHIMBAYEVA, B., Institute of Organic Chemistry, Academy of Sciences Kirgiz. SSR

"Organophosphorus Derivatives of Piperazines"

Frunze, Izvestiya Akademii Nauk Kirgizskoy SSR, No 4, Jul-Aug 73, pp 47-49

Abstract: Reaction of monosubstituted amyl- and benzylpiperazines with phosphonic acid dichlorides and phenylamidophosphoric acid chloride in presence of dry triethylamine yields novel amidophosphonates and amidophosphates. All of the amidophosphonates are crystalline products; the di(1-amylpiperazinyl-4)phenylamidophosphate is an oily product which can be isolated by conversion to a picrate. Another possible synthetic method for amidophosphates is based on the reaction of monoamylpiperazine with dialkyl(aryl)phosphoric acid chlorides in benzene and in presence of dry triethylamine.

1/1

APPROVED FOR RELEASE: 08/09/2001 CIA-RDP86-00513R002202720016-9"

"APPROVED FOR RELEASE: 08/09/2001 CIA-RDP86-00513R002202720016-9

USSR UDC 547.26:118.07

RYSKULOV, T., BEYSHEKEYEV, ZH., and DZHUNDUBAYEV, K. D., Institute of Organic Chemistry, Academy of Sciences KirgizSSR

"Synthesis of Phosphates and Thiophosphates Based on 1-Benzyl-4-(β -hydroxypropyl)-piperazine"

Frunze, Izvestiya Akademii Nauk KirgizskoySSR, No 3, May-Jun 73, pp 49-50

Abstract: Searching for new physiologically active compounds, several phosphate and thiphosphate derivatives of 1-benzyl-4-(β -hydroxypropyl)-piperazine (I) were synthesized by reacting (I) with dialkyl(aryl)phosphoric and thiophosphoric acid chlorides in benzene and in presence of triethylamine. No biological data are reported.

1/1

APPROVED FOR RELEASE: 08/09/2001 CIA-RDP86-00513R002202720016-9"

"APPROVED FOR RELEASE: 08/09/2001 CIA-RDP86-00513R002202720016-9

1/2 024 UNCLASSIFIED PROCESSING DATE--30OCT70

TITLE--THE SELECTION OF UPSET PARAMETERS IN FLASH WELDING OF ALUMINUM AND ITS ALLOYS -U-

AUTHOR-(03)-KABANOV, N.S., MOKEICHEV, V.G., RYSS, B.A.

R

COUNTRY OF INFO--USSR

SOURCE--MOSCOW, SVARCCHNOYE PROIZVODSTVO, NO 3, 1970, PP 28-29

DATE PUBLISHED--------70

SUBJECT AREAS--MATERIALS, MECH., IND., CIVIL AND MARINE ENGR

TOPIC TAGS--ALUMINUM ALLOY, FLASH WELDING, BIBLIOGRAPHY, ALUMINUM

CONTROL MARKING--NO RESTRICTIONS

DOCUMENT CLASS--UNCLASSIFIED

PROXY REEL/FRAME--1999/1306 STEP NO--UR/0135/70/000/003/0028/0029

CIRC ACCESSION NO--AP0123265

UNCLASSIFIED

APPROVED FOR RELEASE: 08/09/2001 CIA-RDP86-00513R002202720016-9"

"APPROVED FOR RELEASE: 08/09/2001 CIA-RDP86-00513R002202720016-9

2/2 024 UNCLASSIFIED PROCESSING DATE--30OCT70

CIRC ACCESSION NO--AP0123265

ABSTRACT/EXTRACT--(U) GP-0- ABSTRACT. THE MINIMUM PERMISSIBLE SPEEDS AND SPECIFIC PRESSURES OF THE UPSET IN FLASH WELDING OF 1-5 MM THICK AND 100-300 MM WIDE STRIPS FROM FORMING ALUMINUM ALLOYS ARE BEING DEFINED MORE ACCURATELY.

UNCLASSIFIED

APPROVED FOR RELEASE: 08/09/2001 CIA-RDP86-00513R002202720016-9"