"APPROVED FOR RELEASE: 07/20/2001 CIA-RDP86-00513R002202910020-3

USSR

GRIGOR'YEV, O. N., et al., Poluprovodnikovaya tekhnika i mikroelektronika, No 6, 1971, pp 16-23

10^{-6} mm Hg without preliminary heating, and in a vacuum of $1\text{-}2 \cdot 10^{-7}$ mm Hg with preliminary heating. The authors assert that the specimens made by their method are in no way inferior to the best of those obtained by thermal decomposition of silance or the reduction of silicon galloids. They find also that silicon on sapphire transistors are at least as good as those of silicon on silicon. They are associated with the Semiconductor Institute of the Ukrainian Academy of Sciences.

APPROVED FOR RELEASE: 07/20/2001 CIA-RDP86-00513R002202910020-3"

"APPROVED FOR RELEASE: 07/20/2001 CIA-RDP86-00513R002202910020-3

USSR

UDC 669.295.004.2

SOLOV'YEV, Yu. V., BARKOV, L. S., SHCHETKIN, Ye. A., KORNIYENKO, L. A., SEMEN'KOV, A. V.

"Continuous Installation for Decontamination of Titanium-Magnesium Production Gas Purification Waste Water"

Tr. Vses. N.-i. i Proekt. In-ta Alyumin., Magn. i Elektrod. Prom-sti [Works of All-Union Scientific Research and Planning Institute for the Aluminum, Magnesium and Electrode Industry], No 79, 1971, pp 95-99, (Translated from Referativnyy Zhurnal, Metallurgiya, No 5, 1972, Abstract No 5 G269 by G. Svodtseva).

Translation: An installation with a planned productivity of 2.5 m^3/hr chlorinated lime milk has been constructed and tested at the Bereznikovskiy titanium-magnesium combine. Tests were performed using the waste water from gas purification in the electrolysis shops and acid waste waters from gas purification from the section where carnallite is dehydrated in fluidized bed furnaces. Extraction of Cl_2 from the wastes is 28%; the main losses (66%) result from the formation of $CaCl_2$. The extraction of Cl_2 can be increased by increasing the concentration of $Ca(ClO)_2$ and decreasing the concentration of $Ca(OH)_2$ and

1/2

APPROVED FOR RELEASE: 07/20/2001 CIA-RDP86-00513R002202910020-3"

"APPROVED FOR RELEASE: 07/20/2001 CIA-RDP86-00513R002202910020-3

USSR

UDC 669.295.004.2

SOLOV'YEV, Yu. V., BARKOV, L. S., SHCHETKIN, Ye. A., KORNIYENKO, L. A., SEMEN'KOV, A. V., Tr. Vses. N.-i. i Proekt. In-ta Alyumin., Magn. i Elektrod. Prom-sti, No 79, 1971, pp 95-99.

$CaCO_3$ in the chlorinated lime milk. The annual economic effect of introduction of this method of the combine was 250,000 rubles.

2/2

APPROVED FOR RELEASE: 07/20/2001 CIA-RDP86-00513R002202910020-3"

"APPROVED FOR RELEASE: 07/20/2001 CIA-RDP86-00513R002202910020-3

S UDC: 621.374.33

USSR

VASIL'YEV, Ye. A., DENISOV, A. S., SUVOROV, V. M., SHCHETKOVSKIY, A. I.

"A Nanosecond Coincidence Circuit"

Tr. 7-y Konferentsii po yadern. elektron. T. 2, Ch. 2 (Works of the Seventh Conference on Nuclear Electronics. Vol 2, Part 2), Moscow, Atomizdat, 1970, pp 167-170 (from RZh-Radiotekhnika, No 7, Jul 70, Abstract No 7G314)

Translation: In this coincidence circuit, each channel consists of an input limiter based on two semiconductor diodes, two amplifiers, a transistorized limiter, and a shaper based on transistor with delay line connected in the emitter circuit, with a sampling element common to all channels and based on a tunnel diode, and an output emitter follower. The circuit is made in the form of a standardized module with bilateral printed circuit; this prevents "creep-through" in a single channel. Bibliography of two titles. N. S.

1/1

APPROVED FOR RELEASE: 07/20/2001 CIA-RDP86-00513R002202910020-3"

"APPROVED FOR RELEASE: 07/20/2001 CIA-RDP86-00513R002202910020-3

Acc. Nr AP0049989 Abstracting Service: CHEMICAL ABST. 5-70 Ref. Code UR0131

82427t Dehydration, rehydration, and sensitivity of Troshkovskii clays to drying. Ponov, A. D.; Shchetnikova, I. L.; Chukreeva, E. I.; Kelareva, E. I.; Gaeva, R. I. (Vost. Inst. Ogneupor., Sverdlovsk, USSR). *Ogneupory* 1970, 35(1), 23-9 (Russ). The temp. interval and the dehydration kinetics of the Troshkovskii clays, their sensitivity to drying, and the possibility to intensify the drying without forming cracks were studied. To study dehydration processes at high temps. all samples of clays were 1st dried to const. wt. at 60°. According to dehydration curves some samples (*A*) loose a small amt. of H_2O at low temps. (100–200°). It is in abs. accord with DTA: on DTA curves up to 200°C slight initial endothermal effects are evident. Other samples (*B*) of the Troshkovskii clays lose nearly all adsorbed H_2O at 100–200°. The amt. of H_2O adsorbed is of 2 kinds; it is caused by the presence of Mg^{++} and Ca^{++} in the exchange com-

1/2

REEL/FRAME
19801927

7

APPROVED FOR RELEASE: 07/20/2001 CIA-RDP86-00513R002202910020-3"

"APPROVED FOR RELEASE: 07/20/2001 CIA-RDP86-00513R002202910020-3

AP0049989

plex. The dehydration of clays is considerably dependent on duration of heating. Samples (A) dehydrate almost fully at 100° during 20–30 min while samples (B) during 90–100 min. The dehydration is accelerated by increasing temp. to 150–200°. For all samples the escape of adsorbed water is complete at ~300°. Samples after thermal treatment again take up water. This rehydration of samples was detd. from the wt. changes of samples annealed at 100, 200, 300, and 500° and then exposed at room temp. to relative air moisture of 25 and 75%. The rehydration increases with increasing content of the montmorillonite in the clay. All samples after thermal treatment at 100° adsorb much more water than untreated samples. The thermal treatment >300° brings about a lower rehydration. The removal of adsorbed water from montmorillonite is the main cause of propensity of some Troshkovskii clays to cracking. Preliminary treatment of the Troshkovskii clays contg. montmorillonite at 300–400° achieves partial dehydration; also, it decreases rehydration and sensitivity to drying.

J. Jindra

2/2

FB

19801928

APPROVED FOR RELEASE: 07/20/2001 CIA-RDP86-00513R002202910020-3"

"APPROVED FOR RELEASE: 07/20/2001 CIA-RDP86-00513R002202910020-3

UDC 632.95

USSR

SMOLINA, A. A.I., SHOMOVA, Ye. A., RUDAVSKIY, V. P., KOVAL', A. A., SHCHEVCHENKO, V. I.

"Insecticidal and Fungicidal Activity of Esters of N-carbacylamido Phosphoric Acids"

Fiziol. aktivn. veshchestva. Resp. mezhved. sb. (Physiologically Active Materials. Republic Interdepartmental Collection), 1972, vyp. 4, pp 19-22 (from RZh-Khimiya, No 5 (II), 1973, Abstract No 5N578)

Translation: The results are presented from testing compounds containing residues of phosphoric and halogen carboxylic acids $RC(OR') = NPO(OR')_2$ (R = CCl_3, CF_3, $R''CCl_2$, R'' = alkyl) and $R'''CCl_2CONHPO(OR'')_2$ (R''' = alkyl) simultaneously for contact insecticidal activity against Calandra oguzae L., Drosophila S. P. and fungicidal toxicity in pure cultures of Fusicladium dendriticum (Wallr.(Fusk., Verticillium dahliae Rleb. $MeCCl_2C(OEt) = NOP(OEt)_2$, $EtCCl_2C(OEt) = NPO(OEt)_2$, $PrCCl_2C(OEt) = NPO(OEt)_2$ cause 100% destruction of Drosophila S. P. with 5 and 10% concentration of the solution in acetone after 24 hours. The tested compounds demonstrate very weak fungicidal activity.

1/1

APPROVED FOR RELEASE: 07/20/2001 CIA-RDP86-00513R002202910020-3"

"APPROVED FOR RELEASE: 07/20/2001 CIA-RDP86-00513R002202910020-3

USSR UDC 621.382.3 2

KIR'YANOVA, V.M., MAKOVIY, A.N., PRAVDINA, T.V., STAROV, V.G., FURSOV, V.V., SHCHEVELEV, M.I.

"To The Problem Of The Physical Interconnection Of The Drift Of Certain Parameters Of Silicon Drift Transistors"

Sb.Tr.po poluprovodnikovym materialam, priboram i kh primeneniyu (Collection Of Works On Semiconductor Materials, Devices, And Their Application), Voronezh, 1971, pp 75-80 (from RZh:Elektronika i yeye primeneniye, No 11, Nov 1972, Abstract No 11B255)

Translation: Using two types of silicon drift transistors as an example, the dependence is studied of the electrical parameters on the dislocation density, the content of O_2 and the resistivity of the initial Si, and the correlation between the values of the parameters and their changes in the process of current aging. 1 tab. 2 ref. V.B.

1/1

APPROVED FOR RELEASE: 07/20/2001 CIA-RDP86-00513R002202910020-3"

"APPROVED FOR RELEASE: 07/20/2001 CIA-RDP86-00513R002202910020-3

USSR

UDC 621.382.3

AKIMOV, M.A., KIR'YANOVA, V.M., KOLESNIKOV, V.G., SHCHEVELEV, M.I.

"Effect Of Dislocation Densities On The Parameters Of Epitaxial-Planar Transistors"

Elektron.tekhnika. Nauch.-tekhn.sb. Poluprovodn. pribory (Electronic Technics. Scientific-Technical Collection. Semiconductor Devices), 1971, Issue 4(61), pp 39-42 (from RZh:Elektronika i yeye primeneniye, No 4, April 1972, Abstract No 4B241)

Translation: The effects were studied of dislocation densities on the breakdown voltage of the collector p-n junctions, the amplification factor with respect to the current, and the reverse current of the collector p-n junction. It is established that with an increase of the dislocation densities from 10^4 to 6.10^4 cm^{-2} the breakdown voltage is decreased and the amplification factor with respect to the current and the reverse current of the collector p-n junction are increased.

Summary.

1/1

APPROVED FOR RELEASE: 07/20/2001 CIA-RDP86-00513R002202910020-3"

"APPROVED FOR RELEASE: 07/20/2001 CIA-RDP86-00513R002202910020-3

USSR

UDC 621.382.3.026.439

KISURIN, A.A., FEDOROV, YE.I., SHCHEVELEV, M.I.

"Some Problems Of The Initial Statistical Processing Of The Results Of Measurements Of The Electrical Parameters Of Power High-Frequency Transistors"

Sb. Tr. po poluprovodnikovym materialam, priboram i ikh primeneniyu (Collection Of Works On Semiconductor Materials, Devices, And Their Applications), Voronezh, 1971, pp 169-178 (from RZh:Elektronika i yeye primeneniye, No 11, Nov 1972, Abstract No 11B252)

Translation: The application of methods of correlation--regressive analysis to the results of measurements of the electrical parameters of power HF transistors is described. For correct application of these methods, the requirements which are imposed on the conditions for collection of statistical material are considered: 1) Elimination of sharply separated results of measurements; 2) Determination of the necessary and sufficient quantity of transistors in the sample; 3) Verification of homogeneity of several samples. The analysis was conducted on ten lots. It is shown that 100 transistors in a lot is a sufficient quantity for the specific case considered of the difference of a temporal nature during the collection of statistical material for a correlation--regressive analysis of parameters. 3 ref. A.M.

1/1

APPROVED FOR RELEASE: 07/20/2001 CIA-RDP86-00513R002202910020-3"

"APPROVED FOR RELEASE: 07/20/2001 CIA-RDP86-00513R002202910020-3

USSR

UDC 539.216.2

AKULININ, S.A., YERASHOV, A.N., SHCHEVELEV, M.I.

"To The Problem Of The Mechanism Of The Low-Frequency Dispersion Of The Dielectrical Characteristics Of Thin Amorphous Films"

Sb. tr. po poluprovodnikovym materialam, priboram i ikh primeneniyu (Collection Of Works On Semiconductor Materials, Devices, And Their Applications), Voronezh, 1971, pp 22-29 (from RZh:Elektronika i yeye primeneniye, No 11, Nov 1972, Abstract No 11B199)

Translation: The proposed model explains the observed linear dependence between C^{-1} (log f) and $R_0(f^{-1})$, where C is the capacitance; R_0 is the leakage resistance of a capacitor with an amorphous dielectric; f is the frequency, and also the independence of the dielectric losses from the frequency. The model is based on an assumption concerning the random character of the distribution of the volume resistance in an oxide dielectric film which has an amorphous structure and the exponential character of the barriers between the individual fluctuations of the density. The respective analytical expressions for C and R_0 are obtained, and the curves are plotted of the calculated dependence of normalized resistance, capacitance, and the dielectric loss tangent. The model is applicable to oxide ion dielectrics with an amorphous structure. 3 ill. 5 ref. V.K.

1/1

APPROVED FOR RELEASE: 07/20/2001 CIA-RDP86-00513R002202910020-3"

"APPROVED FOR RELEASE: 07/20/2001 CIA-RDP86-00513R002202910020-3

USSR

SHCHEVELEV, YU. S., PALILOV, V. N., and BAYANOV, M. A., Sverdlovsk Scientific Research Institute of the Timber Institute

"Suspension for Track Rollers of a Tracked Vehicle"

USSR Authors' Certificate No 356190, Cl. B 62d 55/16, filed 9 Mar 70, published 23 Oct 72 (from Otkrytiya, Izobreteniya, Promyshlennyye Obraztsy, Tovarnyye Znaki, No 32, 1972, p 57)

Abstract: 1. The suspension contains longitudinal levers, each of which is securely mounted on a horizontally arranged axis hinged to a side member of the tracked vehicle, and elastic elements which interact with stops which are motionless with respect to the axes. To improve the roadability of the tracked vehicle, the stops are made separate from the suspension levers, are positioned between the side members and arranged on the axis of each lever with angular displacement of one from the other.

2. Suspension as above, whose distinguishing feature is that the levers are made of two parts which are female to the track rollers, while the lever axes are hinged to the side flanges of the side members, which are female to the suspension levers.

1/1

APPROVED FOR RELEASE: 07/20/2001 CIA-RDP86-00513R002202910020-3"

"APPROVED FOR RELEASE: 07/20/2001 CIA-RDP86-00513R002202910020-3

1/2 039 UNCLASSIFIED PROCESSING DATE--18SEP70

TITLE--PROPERTIES OF FILLERS FOR CONDUCTING PAINT AND VARNISH COATINGS HARDENABLE IN A MAGNETIC FILED -U-

AUTHOR-(03)-GUL, V.YE., SHCHIBRYA, N.G., MIKHAYLOV, N.I.

COUNTRY OF INFO--USSR

SOURCE--LAKOKRASOCH. MATER. IKH. PRIMEN. 1970, (1) 49-52

DATE PUBLISHED--------70

SUBJECT AREAS--MATERIALS

TOPIC TAGS--ELECTRICAL CONDUCTIVITY, IRON POWDER, NICKEL POWDER, COPPER, TITANIUM, MAGNESIUM, EPOXY RESIN, COPOLYMER, PAINT, VARNISH, PROTECTIVE COATING, POLYVINYL CHLORIDE, CHEMICAL STABILITY

CONTROL MARKING--NO RESTRICTIONS

DOCUMENT CLASS--UNCLASSIFIED

PROXY REEL/FRAME--1989/0547 STEP NO--UR/0303/70/000/001/0049/0052

CIRC ACCESSION NO--AP0107152

UNCLASSIFIED

APPROVED FOR RELEASE: 07/20/2001 CIA-RDP86-00513R002202910020-3"

"APPROVED FOR RELEASE: 07/20/2001 CIA-RDP86-00513R002202910020-3

2/2 039 UNCLASSIFIED PROCESSING DATE--18SEP70

CIRC ACCESSION NO--AP0107152

ABSTRACT/EXTRACT--(U) GP-0- ABSTRACT. ELECTROLYTIC FE POWDER HAS 10 PRIME5-10 PRIME6 OHM CM ELEC. RESISTANCE AND CANNOT BE USED AS FILLER FOR ELECTROCOND. COATINGS. NI POWDER PRODUCED BY THE CARBONYL PROCESS HAS SIMILAR TO 10 PRIME NEGATIVE1 TO 10 PRIME NEGATIVE3 OHM CM RESISTANCE AND GLOBULAR PARTICLE SHAPE SIMILAR TO 3 MU IN DIAM. IT CONTAINS SMALL AMTS. OF CU, BE, ZR, TI, AND MG AND IT IS MORE RESISTANT TO AIR OXIDN. THAN ELECTROLYTIC NI, THE PARTICLES OF WHICH HAVE DENDRITE FORMS AND 10-30 MU DIAMS. AN EPOXY CRESOL LACQUER OR A PARTIALLY SAPOND. VINYL ACETATE VINYL CHLORIDE COPOLYMER FILLED WITH 35-40PERCENT CARBONYL NI POWDER AND HARDENED IN A MAGENTIC FIELD HAS 10 PRIME NEGATIVE3 TO 10 PRIME NEGATIVE4 OHM CM ELEC. RESISTANCE.

UNCLASSIFIED

APPROVED FOR RELEASE: 07/20/2001 CIA-RDP86-00513R002202910020-3"

"APPROVED FOR RELEASE: 07/20/2001 CIA-RDP86-00513R002202910020-3

1/2 013 UNCLASSIFIED PROCESSING DATE--11DEC70

TITLE--REMOVAL OF TRACE IMPURITIES IN PHOSPHORUS BY DISTILLATION WITH WATER VAPOR IN THE PRESENCE OF ION EXCHANGE RESINS--U--

AUTHOR-(03)-TALANOV, N.D., ASTAKHOVA, G.V., SHCHIGAREVA, ZH.T.

COUNTRY OF INFO--USSR

SOURCE--ZH. PRIKL. KHIM. (LENINGRAD) 1970, 43(4), 820-3

DATE PUBLISHED--------70

SUBJECT AREAS--CHEMISTRY

TOPIC TAGS--CHEMICAL SEPARATION, PHOSPHORUS, ION EXCHANGE RESIN, COPPER, IRON, ALUMINUM, AQUEOUS SOLUTION/(U)PF ION EXCHANGE RESIN, (U)KF ION EXCHANGE RESIN

CONTROL MARKING--NO RESTRICTIONS

DOCUMENT CLASS--UNCLASSIFIED

PROXY REEL/FRAME--3004/0965 STEP NO--UR/0080/70/043/004/0820/0823

CIRC ACCESSION NO--AP0131550

UNCLASSIFIED

APPROVED FOR RELEASE: 07/20/2001 CIA-RDP86-00513R002202910020-3"

"APPROVED FOR RELEASE: 07/20/2001 CIA-RDP86-00513R002202910020-3

2/2 013 UNCLASSIFIED PROCESSING DATE--11DEC70

CIRC ACCESSION NO--AP0131550

ABSTRACT/EXTRACT--(U) GP-0- ABSTRACT. A METHOD FOR PURIFYING WHITE P IS GIVEN. A SAMPLE OF P, PURIFIED CATION EXCHANGER (PF OR KF) WITH PHOSPHONIC ACID FUNCTIONAL GROUPS, AND PURE WATER (1:4:30) WERE PLACED IN A DISTN. APP. THAT WAS THEN EVACUATED AND FILLED WITH INERT GAS, AND STEAM WAS PASSED THROUGH AT ATM. PRESSURE. THE TEMP. OF WATER IN CONDENSER AND IN RECEIVER WAS MAINTAINED AT 55-65DEGREES. THE PURIFIED P WAS TRANSFERRED INTO AN AMPUL, DIRED IN VACUU, AND TRANSFORMED INTO THE RED MODIFICATION. ANAL. CONTROL WAS PERFORMED BY SPECTROCHEM. METHOD. THE AMT. OF METALLIC IMPURITIES (CU, FE, AND AL IN THE PURIFIED P WAS SMALLER THAN OR EQUAL TO 1 TIMES 10 PRIME NEGATIVE6 PERCENT. THE IONIC FORM OF THE RESIN (H PRIME POSITIVE, NA PRIME POSITIVE, OR NH SUB4 PRIME POSITIVE) APPARENTLY HAD NO EFFECT ON THE QUALITY OF PURIFICATION, BUT BETTER RESULTS WERE OBTAINED WITH KF THAN WITH PF EXCHANGER. THE PURITY OF THE PRODUCT SLIGHTLY DECREASED WHEN INCREASING DISTN. RATE (FROM 350 TO 1300 ML H SUB2 O-HOUR) AND AMT. OF P TAKEN (FROM 100 TO 200 G).

UNCLASSIFIED

APPROVED FOR RELEASE: 07/20/2001 CIA-RDP86-00513R002202910020-3"

"APPROVED FOR RELEASE: 07/20/2001 CIA-RDP86-00513R002202910020-3

USSR

UDC 621.382.3

GUSEV, V.M., SHCHIGOL', F.A., NAUMENKO, V.G., LEVITSKIY, K.B., SHCHELCHKOV, B.I., KOZLOV, YU. G., ZAKHAROV, V.I.

"Silicon Planar n-p-nn$^+$ Microwave Transistor Obtained By The Method Of Ion Implantation"

V sb. Radiatsion. fiz. nemet. kristallov (Radiation Physics Of Nonmetal Crystals--Collection Of Works), Minsk, Nauka i tekhn., 1970, pp 155-158 (from RZh--Elektronika i yeye primeneniye, No 1, January 1971, Abstract No 1B221)

Translation: The method of ion implantation in conjunction with planar technology makes it possible to obtain n-p-nn$^+$ microwave transistors with a critical frequency of amplification with respect to the current of f_T = 2 GHz. Specimens were obtained and investigated with a diffusion base and an ion-implantation emitter, and devices in which both the collector and emitter junctions were produced by the method of ion implantation. Basic static and frequency parameters of the devices are presented and also the dependences $V_{ct} = f(I_e)$, $\beta_f = f(I_k)$. 3 ill. 6 ref. Summary.

1/1

APPROVED FOR RELEASE: 07/20/2001 CIA-RDP86-00513R002202910020-3"

"APPROVED FOR RELEASE: 07/20/2001 CIA-RDP86-00513R002202910020-3

SHCHIGOLEV, V.V.

SOME PARAMETERS OF HEMODYNAMICS AND ENERGY EXPENDITURES OF CREW MEMBERS OF THE 'SOYUZ-6, 7' SPACESHIPS

/Article by Yu. D. Tometov and V. V. Shchigolev, Moscow, Aktual'nye Voprosy Kosmicheskoy Biologii i Meditsiny (Current Problems in Space Biology and Medicine), Moscow, 1971, p 227/

A study of hemodynamics and gas exchange of crew members of the "Soyuz-6, 7" ships was made under basal metabolism conditions a month before the launching and also on the second and fourth days after the flight was completed. The minute volume of circulation (MVC) was determined by the method of return breathing of CO_2 and gas exchange (oxygen consumption and release of carbon dioxide -- VO_2, VCO_2) was ascertained by the modified Douglas-Holden method.

On the second day after landing all the cosmonauts exhibited an increase in the MVC averaging 4.01±0.13 to 4.75± 0.28 liters/minute or by 14.7%. The greatest increase in MVC was exhibited by G. S. Shonin and A. V. Filipchenko and was 0.7 and 1.5 liter/minute respectively. In a repeated determination on the fourth day the MVC even increased on the average for the group by 5% in comparison with the preceding investigation.

The increase in MVC was caused by a substantial increase in the pulse rate (PR) in all the cosmonauts (from 55±2.3 to 63±1.5 beat/minute, whereas the cardiac stroke volume during the investigation on the second day after the landing was even somewhat below the initial level for four of the five cosmonauts. It is interesting to note that the direction of changes in hemodynamics and metabolism coincided. In the investigation on the second day the energy expenditures had increased for all the cosmonauts on an average of 20% and had a tendency to a decrease in the repeated investigation on the fourth day.

JPRS 56499
14 JULY 72

APPROVED FOR RELEASE: 07/20/2001 CIA-RDP86-00513R002202910020-3"

"APPROVED FOR RELEASE: 07/20/2001 CIA-RDP86-00513R002202910020-3

1/2 022 UNCLASSIFIED PROCESSING DATE--30OCT70

TITLE--ADSORPTION OF LITHIUM AND CESIUM CATIONS ON PLATINUM -U-

AUTHOR-(03)-PETRIY, O.A., FRUMKIN, A.N., SHCHIGOREV, I.G.

COUNTRY OF INFO--USSR

SOURCE--ELEKTROKHIMIYA 1970, 6(3), 400-4

DATE PUBLISHED--------70

SUBJECT AREAS--CHEMISTRY

TOPIC TAGS--ADSORPTION, LITHIUM, CESIUM, PLATINUM ELECTRODE

CONTROL MARKING--NO RESTRICTIONS

DOCUMENT CLASS--UNCLASSIFIED

PROXY REEL/FRAME--1998/1135 STEP NO--UR/0364/70/006/003/0400/0404

CIRC ACCESSION NO--AP0121694

UNCLASSIFIED

APPROVED FOR RELEASE: 07/20/2001 CIA-RDP86-00513R002202910020-3"

"APPROVED FOR RELEASE: 07/20/2001 CIA-RDP86-00513R002202910020-3

2/2 022 UNCLASSIFIED PROCESSING DATE--30OCT70

CIRC ACCESSION NO--AP0121694

ABSTRACT/EXTRACT--(U) GP-0- ABSTRACT. THE ADSORPTION OF LI PRIME POSITIVE AND CS PRIME POSITIVE ON PLATINIZED PT ELECTRODE WAS INVESTIGATED AT 20 PLUS OR MINUS 1DEGREE BY THE ADSORPTION CURVE, CHARGING CURVE, AND POTENTIOMETRIC METHODS. ADSORPTION WAS MEASURED IN ACID (H SUB2 SO SUB4 PLUS LI SUB2 SO SUB4, H SUB2 SO SUB4 PLUS CS SUB2 SO SUB4, HBR PLUS LIBR, HBR PLUS CSBR), AND THE ALK. (LIOH, CSOH) SOLNS. DISPLACEMENT OF H PRIME POSITIVE IONS FROM THE ELECTRODE BY CS AND LI IONS WAS NOTED WHEN A CORRESPONDING EXCESS OF THE LATTER WAS PRESENT IN SOLN. AS WELL AS A GREATER ABILITY TO ADSORPTION OF CS PRIME POSITIVE THAN LI PRIME POSITIVE WAS OBSERVED. ALONG WITH INCREASE OF THE SP. ADSORPTION ON GOING FROM LI PRIME POSITIVE TO CS PRIME POSITIVE, THE CHARGING CURVES BECOME LESS REVERSIBLE UPON POLARIZATION OF THE ELECTRODE TO 0.8-0.9 V. IN THE LIMITS OF THE H REGION, THESE CURVES ARE PRACTICALLY REVERSIBLE, WHICH DENOTES DIFFERENCES IN THE BINDING FORCE OF O WITH PT IN THE PRESENCE OF LI PRIME POSITIVE AND CS PRIME POSITIVE.

FACILITY: MOSK. GOS. UNIV. IM. LOMONOSOVA, MOSCOW, USSR.

UNCLASSIFIED

APPROVED FOR RELEASE: 07/20/2001 CIA-RDP86-00513R002202910020-3"

"APPROVED FOR RELEASE: 07/20/2001 CIA-RDP86-00513R002202910020-3

UNCLASSIFIED PROCESSING DATE--04DEC70

1/2 016

TITLE--PREDICTIONS FOR THE POLARIZATION OF FINITE PARTICLES IN ELASTIC AND INELASTIC PROCESSES AT HIGH ENERGIES -U-

AUTHOR-(03)-KUDRYAVTSEV, V.A., LEVIN, YE.N., SHCHIPAKIN, A.A.

COUNTRY OF INFO--USSR

SOURCE--YAD. FIZ. 1970, 11(4), 858-69

DATE PUBLISHED-------70

SUBJECT AREAS--PHYSICS

TOPIC TAGS--HIGH ENERGY PARTICLE, REGGE POLE, ELASTIC SCATTERING, INELASTIC SCATTERING

CONTROL MARKING--NO RESTRICTIONS

DOCUMENT CLASS--UNCLASSIFIED STEP NO--UR/0367/70/011/004/0858/0869

PROXY REEL/FRAME--3007/1071

CIRC ACCESSION NO--AP0136491 UNCLASSIFIED

APPROVED FOR RELEASE: 07/20/2001 CIA-RDP86-00513R002202910020-3"

"APPROVED FOR RELEASE: 07/20/2001 CIA-RDP86-00513R002202910020-3

UNCLASSIFIED PROCESSING DATE--04DEC70

2/2 016

CIRC ACCESSION NO--AP0136491

ABSTRACT/EXTRACT--(U) GP-0- ABSTRACT. A REVIEW IS GIVEN OF POLARIZATION PROPERTIES OF FINITE PARTICLES IN ELASTIC AND INELASTIC PROCESSES AT HIGH ENERGIES. THESE PROPERTIES ARE DUE TO THE CONTRIBUTION OF VACUUM BRANCH POINTS AND TO THE CONTRIBUTION OF THE CONSPIRING REGGE POLE.

FACILITY: FIZ.-TEKH. INST. IM. IOFFE, LENINGRAD, USSR.

UNCLASSIFIED

APPROVED FOR RELEASE: 07/20/2001 CIA-RDP86-00513R002202910020-3"

"APPROVED FOR RELEASE: 07/20/2001 CIA-RDP86-00513R002202910020-3

UNCLASSIFIED PROCESSING DATE--04DEC70

1/2 045

TITLE--AMPLIFICATION OF SHORT SUBHARMONIC PULSES IN A PARAMETRIC AMPLIFIER WITH A BACKWARD WAVE -U-

AUTHOR-(03)-GORSHKOV, A.S., MARCHENKO, V.F., SHCHIPAKIN, S.D.

COUNTRY OF INFO--USSR

SOURCE--VESTNIK MOSKOVSKOGO UNIV. FIZ. ASTRON. (USSR), VOL. 11, NO. 1, P. 87-8 (1970)

DATE PUBLISHED--------70

SUBJECT AREAS--ELECTRONICS AND ELECTRICAL ENGR.

TOPIC TAGS--HARMONIC FUNCTION, LASER R AND D, DIODE CIRCUIT, BACKWARD WAVE AMPLIFIER, PARAMETRIC AMPLIFIER, TRANSMISSION LINE, MODEL

CONTROL MARKING--NO RESTRICTIONS

DOCUMENT CLASS--UNCLASSIFIED

STEP NO--UR/0188/70/011/001/0087/0088

PROXY REEL/FRAME--3008/1393

CIRC ACCESSION NO--AP0138403

UNCLASSIFIED

APPROVED FOR RELEASE: 07/20/2001 CIA-RDP86-00513R002202910020-3"

"APPROVED FOR RELEASE: 07/20/2001 CIA-RDP86-00513R002202910020-3

UNCLASSIFIED PROCESSING DATE--04DEC70

2/2 045

CIRC ACCESSION NO--AP0138403

ABSTRACT/EXTRACT--(U) GP-0- ABSTRACT. INVESTIGATION OF THE MECHANISM OF AMPLIFICATION OF STRONG SUBHARMONIC PULSES (SUCH AS APPEAR IN LASER AMPLIFIERS IN THE REGION OF FULL SATURATION), BY MEANS OF A MODEL CONSISTING OF AN ARTIFICIAL TRANSMISSION LINE WITH A PERIODIC DISTRIBUTION OF DIODES. SOME OSCILLOGRAMS ARE ILLUSTRATED AND DISCUSSED.

UNCLASSIFIED

APPROVED FOR RELEASE: 07/20/2001 CIA-RDP86-00513R002202910020-3"

"APPROVED FOR RELEASE: 07/20/2001 CIA-RDP86-00513R002202910020-3

UNCLASSIFIED

SECTION III

SO: SELECTED AEROSPACE MEDICAL FACILITIES

FCS-89
SEPT 71

Name: Institute of Biophysics, Pushchino

Description:

(U) During this quarterly reporting period, 25 new articles were identified from the Institute of Biophysics, Pushchino. On the basis of these articles, it was possible to identify 32 new personalities with the institute. These personalities, the subjects of the articles, and the dates are given below:

all-biophysics/physiology

Aliyeva, S. A.	phosphorylation	1971 (34)
Apikayeva, G. F.	radiation effect	1970 (35)
Aripova, D. F.	radiation effect	1971 (36)
Azhipa, Ya. I.	hypoxia	1969 (37)
Bregadze, I. F.	radiation effect	1970 (38)
Busel, Ye. P.	luminescence	1970 (38)
Dmitriyeva, T. I.	radiation effect	1970 (38)
Dmitriyeva, V. A.	blood plasma	1969 (40)
Domarova, O. P.	radiation effect	1970 (39)
Dubrov, A. P.	biochemical analysis	1971 (41)
Gabelova, N. A.	muscle physiology	1971 (42)
Ganassi, Ye. E.	radiation effect	1970 (35)
Ivkova, M. N.	serum albumin	1971 (43)
Kasatkin, V. S.	phosphorylation	1971 (34)
Khokhlova, G. K.	muscle physiology	1971 (44)
Kislov, A. N.	salivary gland	1970 (45)
Klyagina, V. P.	oligonucleotide	1970 (46)
Korol, B. A.	radiation effect	1971 (44)
Kosheleva, G. N.	biochemical analysis	1971 (41)

SHCHIPAKIN, V.N.

UNCLASSIFIED

APPROVED FOR RELEASE: 07/20/2001 CIA-RDP86-00513R002202910020-3"

"APPROVED FOR RELEASE: 07/20/2001 CIA-RDP86-00513R002202910020-3

Biochemistry

USSR UDC 576.314

EVTODIYENKO, YU. V., PESHKOVA, L. V., and SHCHIPAKIN, V. N., Institute of Biophysics, USSR Academy of Sciences, Pushchino-na-Oke

"Possible Mechanism of Calcium, Hydrogen, and Phosphate Ion Transport Through a Mitochondrial Membrane"

Ukrainskiy Biokhimicheskiy Zhurnal, Vol 43, No 1, 1971, pp 98-104

Abstract: Transport of Ca^{2+}, H^+, and phosphate (H_3PO_4, $H_2PO_4^-$, HPO_4^{2-}, and PO_4^{3-}) can occur across a mitochondrial membrane against the electrochemical potential with direct participation of mitochondrial ATP-ase. Literature and experimental data are presented to prove this point. Transport against the electrochemical potential at a mitochondrial membrane requires the involvement of at least two forms of ions with different properties. The transition from one form to the other must be coupled with an exothermic reaction, such as ATP hydrolysis. The carrier for mitochondrial H^+ may be ATP-ase of the membrane. Ca^{2+} is similarly transported across a mitochondrial membrane. This calcium transfer is accompanied by phosphate transfer. A mechanism is proposed for the participation of ATP-ase in the transfer of the above types of ions, and this mechanism is explained in terms of literature data.

1/1

APPROVED FOR RELEASE: 07/20/2001 CIA-RDP86-00513R002202910020-3"

"APPROVED FOR RELEASE: 07/20/2001 CIA-RDP86-00513R002202910020-3

UDC 576.851.48.097.2

USSR

PODOPLELOV, I. I., BOCHKO, G. M., and SHCHIPKOV, V. P., Scientific Research Laboratory of Experimental Immunobiology, Academy of Medical Sciences USSR

"Heterogeneous E. coli Antigens That Cross-React With Human A, B, and O Antigens"

Moscow, Byulleten' Eksperimental'noy Biologii i Meditsiny, Vol 72, No 11, Nov 71, pp 61-63

Abstract: By using the reaction of adsorption of monospecific antibodies, the presence of heterogeneous antigens of the type of human A, B, and O(H) isoantigens in 27 strains of E. coli comprising the most common serum types of enteropathogenic microorganisms of this species was investigated. Six strains contained heterogeneous antigens of this type. In one strain of the serum type 086, antigens similar to A and B antigens were present, while three strains of the same serotype contained B antigen only and one strain of the serum type 0-128 contained O(H) antigen. Strain K-12 200 PS showed the presence of a small amount of B antigen. A relationship between the pathogenicity of E. coli to persons of definite blood groups and the presence of heterogeneous antigens in the microorganisms of this species may be assumed.

1/1

APPROVED FOR RELEASE: 07/20/2001 CIA-RDP86-00513R002202910020-3"

"APPROVED FOR RELEASE: 07/20/2001 CIA-RDP86-00513R002202910020-3

Titanium

USSR

UDC 669.295

1

KOLACHEV, B. A., NOSOV, V. K., LIVANOV, V. A., SHCHIPUNOV, G. I., CHUCHURYUKIN, A. D.

"Influence of Hydrogen on Technological Ductility of Ti Alloy with 9% Al"

Ordzhonikidze, Isvestiya Vysshikh Uchebnykh Savedeniy, Tsvetnaya Metallurgiya, No 4, 1972, pp 137-142.

Abstract: This work presents a confirmation of data on the favorable influence of hydrogen on the technological ductility of alloys with high aluminum content at hot pressure working temperatures. The favorable influence of hydrogen is manifested not only as a decrease in the temperature of the anomalous increase in plasticity related to the $\alpha + \beta \rightleftarrows \beta$ conversion (about 1,100° for the alloy Ti + 9% Al), but also as an expansion in the temperature interval of increase ductility for upsetting from 1,000° to 1,050°. The positive influence of hydrogen is also manifested as a significant reduction in the force of deformation throughout the entire interval of temperatures and hydrogen concentrations studied. Hydrogen has its most favorable influence in the 0.50-0.2% (by mass) concentration interval.

1/1

APPROVED FOR RELEASE: 07/20/2001 CIA-RDP86-00513R002202910020-3"

"APPROVED FOR RELEASE: 07/20/2001 CIA-RDP86-00513R002202910020-3

GLORIA SHCHIRINA, MAYA G.

PSYCHIATRY

SO: JPRS 54092
3 JAN 1972

SNEZHNEVSKIY INTERVIEWED AT PSYCHIATRIC MEETING

[Interview of Dr Andrei V. Snezhnevskiy by Federico Ortiz; Mexico, Excelsior, Spanish, 1 December 1971, pp 1, 14]

Professor Andrei V. Snezhnevskiy, Chairman of the Institute of Psychiatric Research and a member of the Soviet Academy of Medicine, told Excelsior yesterday that the charges that some Soviet dissidents are committed to institutions for the mentally ill is absolutely false and attributed these charges to the cold war.

Excelsior obtained a long interview with the Soviet scientist who is a delegate to the World Congress of Psychiatry being held in Mexico.

During the interview he was accompanied by his colleagues, Maya G. Shchirina, a research scientist at Moscow's Psychiatric Institute and also a member of the Soviet Medical Academy; Dr Edward A. Bayaban, an official of the Soviet Ministry of Health; Professor Marat Vartanian of the Psychiatric Institute, and two Russian interpreters.

"Ask anything you want to know about this case," said Professor Snezhnevskiy, a tall man of heavy complexion, white hair, and a strong, firm voice. "We can talk for many hours," he added while a tape recorder was being readied at his side.

He seemed impatient to comment upon the "open letter" which was sent to the 5th International Congress of Psychiatry, in which Soviet citizens complained that some dissidents are forced into mandatory treatment at psychiatric hospitals in order to be politically rehabilitated.

A secretary offered drinks and Professor Snezhnevskiy asked for "scotch and soda."

APPROVED FOR RELEASE: 07/20/2001 CIA-RDP86-00513R002202910020-3"

"APPROVED FOR RELEASE: 07/20/2001 CIA-RDP86-00513R002202910020-3

The Soviet scientist said:

"This is a cold war maneuver carried out by experts. It began, and not by coincidence, during the period when preparations for this convention were in progress, starting with the translation into English of Medvedev's book Who is insane?

That translation was made in preparation for this congress. Some copies have been sent to Mexico and been made available to the congress' secretariat.

The book attempts to show that dissidents are interned in psychiatric hospitals."

After a pause Professor Snezhnevskiy added: "In this cold war anything goes."

"In this war," he added, "everything is distorted to absurd extremes. For example, the western press claims that an eminent scientist, an old man, almost myopic and entirely dedicated to science, whom they identify as a young colonel, is a member of the NKVD /the Soviet secret police/."

Sick Delinquents

"But what about the case in question?" Asked this reporter.

"It pertains to eight patients who, along with other sane persons, were tried under Soviet laws for various crimes.

During their trial the suspicion emerged that these persons were mentally ill; therefore they were sent to the Psychiatric Institute which is part of the Health Ministry of the Soviet Union."

He reached for the glass of whisky and before drinking it he said:

"An institute which is of course independent from the legal apparatus. It doesn't depend at all on them. It is only under the Ministry of Health.

Those individuals were examined during a period of 1 to 2 months; they were under observation under the care of experienced doctors.

The results of the examination, as well as the patients themselves, were then studied by a commission of three psychiatrists. Their findings concerning the mental condition of the patients were presented to the tribunals which approved it.

APPROVED FOR RELEASE: 07/20/2001 CIA-RDP86-00513R002202910020-3"

"APPROVED FOR RELEASE: 07/20/2001 CIA-RDP86-00513R002202910020-3

It was found that they were not responsible for their acts and that therefore they could not be tried. It was then decided to commit them for treatment. In sum, their imprisonment was substituted for psychiatric treatment; treatment which they needed.

In the press it was said that it was for an indefinite period. But this is also false because always all patients, even when there are no signs of improvement, are examined at least once every 6 months.

If there are indications of an improvement, the commission is convened immediately. Therefore the allegation that sane persons have been committed to psychiatric institutions is absolutely false."

The USSR has always been Accused

"But this charge against the Soviet psychiatrists has existed for a long time now. At the beginning of this century, at the Russian Psychiatric Congress, Professor Bazhenov said: "In the press, specially that of Western Europe, comments often appear concerning the commitment of sane individuals to psychiatric hospitals in the Soviet Union because of egoistic or political reasons."

"In this sense," added Professor Snezhevskiy, "this manifestation of the cold War is not characterized by its originality.

Its object is to involve the scientists in general and this Psychiatric Convention into the cold war.

This also is not new. I was in Mexico 20 years ago -- since then its capital has changed incredibly; new buildings have emerged; the University, then being built, is a marvellous cultural complex of which the Mexicans can be justly proud -- and already at that time efforts were being made to include the psychiatrists in the cold war. It still continues.

In 1951 the International Congress of the Federation of Mental Health was held in Mexico. At that congress Soviet psychiatrists were also accused of having denied their sanity to a group of persons. It was said that in the Soviet Union psychology was not recognized and that children were taught through a method of conditioned reflexes and food reinforcements.

At the Second Congress in Toronto, Canada, Soviet psychiatrists were charged with brainwashing American soldiers captured during the Korean War."

APPROVED FOR RELEASE: 07/20/2001 CIA-RDP86-00513R002202910020-3"

"APPROVED FOR RELEASE: 07/20/2001 CIA-RDP86-00513R002202910020-3

Professor Snezhnevskiy asked for a folder from which he extracted a photograph showing the Soviet delegates at the Toronto meeting and the newspapers caption commenting on the brainwashing. Included in that photograph was the Chairman of the Institute of Scientific Psychiatric Research.

Brainwashing is not Scientific

"This term (brainwashing) has no scientific basis. It is a general concept, held world-wide, which includes the idea of how to influence people through propaganda. The only scientific aspect about it is that particular way of influencing the viewpoint of new ideologies."

Dr Babayan intervened to explain that as a matter of fact Soviet psychiatric treatment combines the treatment of the mentally ill at medical institutions with treatment outside, on an outpatient basis. A procedure which, he added, is being recognized throughout the world.

Professor Snezhnevskiy added that when mentioning brainwashing many absurd allegations have been made, such as the talk about the injection of a substance which paralyzes a person's will.

"From a scientific point of view this is absurd. The people dedicated to this sort of propaganda have very few scruples and direct the propaganda to laymen who know nothing about medicine.

The vast majority of the delegates to the congress share our own opinion. Only a small group has fallen in the trap and would like to steer the congress towards considering this sort of problem.

Many psychiatrists from many countries have visited the Soviet Union; they have been in our hospitals and clinics for the mentally ill; they have attended psychiatric seminaries, verified how our patients are being helped, and have recognized how our system has advanced.

But this is not all. Jurists and judges have also been there, mostly from the United States. They have studied the practice of Soviet penal psychiatry. The result was a book published in the United States concerning the systems of Soviet psychiatry and penal psychiatry.

APPROVED FOR RELEASE: 07/20/2001 CIA-RDP86-00513R002202910020-3"

"APPROVED FOR RELEASE: 07/20/2001 CIA-RDP86-00513R002202910020-3

Because of that we are amazed that persons who have visited our country have let themselves be dragged into this political campaign against the Soviet psychiatrists."

7986
CSO: 1800-W

APPROVED FOR RELEASE: 07/20/2001 CIA-RDP86-00513R002202910020-3"

"APPROVED FOR RELEASE: 07/20/2001 CIA-RDP86-00513R002202910020-3

SHCHIRSKAYA, V.A.

STUDY OF VOLATILE SUBSTANCES RELEASED BY POLYMER CONSTRUCTION MATERIALS

/Article by V. D. Yablochkin, V. A. Shchirskaya, A. M. Popov, A. I. Gorshunova, Ye. V. Volchin and E. K. Chukhno; Moscow, Aktual'nyye Voprosy Kosmicheskoy Biologii i Meditsiny (Current Problems in Space Biology and Medicine), Russian, 1971, pp 301-305/

III. Foam and Porous Plastics Based on Polystyrene and Polyurethane

Taking into account the peculiarities of practical use, one can expect polymer construction materials to be affected by different environmental factors, especially temperature. As experience demonstrates, the latter leads to the formation and release of great quantities of volatile substances (V. D. Yablochkin, 1969). The objective of this study was an investigation of a complex of volatile substances released by some foam and porous plastics under conditions simulating the parameters of the surrounding medium in the course of their use.

Experimental Part

In our study we selected a group of nine samples of foam and porous plastics on the basis of foam polystyrene and foam-porous polyurethane, including: foam plastics on the basis of emulsion and beaded polystyrenes PS-1, PS-4 and PS-B, hard foam plastics, polyurethane elastic incombustible porous plastic, porolon, backed with glass plastic by means of glue based on solutions of silicone rubbers, porolon and articles made from it (porolon matting).

The method for formulating and conducting the analytical investigation of the volatile substances released by polymer construction materials, including chemical, spectrophotometric and gas chromatographic analysis, did not differ from that described in communication I.

JPRS #56,499
14 JULY 72

APPROVED FOR RELEASE: 07/20/2001 CIA-RDP86-00513R002202910020-3"

"APPROVED FOR RELEASE: 07/20/2001 CIA-RDP86-00513R002202910020-3

SHCHIRSKAYA, V. A.

INVESTIGATION OF VOLATILE SUBSTANCES RELEASED BY POLYMER CONSTRUCTION MATERIALS

/Article by V. D. Yablochkin, A. M. Popov, A. E. Gershunova, V. A. Shchirskaya, Ye. V. Kolchina and E. I. Chukhno; Moscow, Aktual'nyye Voprosy Kosmicheskoy Biologii i Meditsiny (Current Problems in Space Biology and Medicine), Russian, 1971, pp 292-299/

I. Block, Sheet and Granulated Plastics

During recent years there has been a considerable broadening of the field of applicability of plastics as construction materials (E. Behr, 1967). Thermoplastics on the basis of polycarbonates, polyamides and copolymers of the ABC type (Spencer, 1969) have shown the greatest possibilities of use in this direction. The content of volatile substances in polymers exerts a substantial effect on their physicomechanical properties and toxicity (G. P. Kvyatkovskaya, V. V. Lapshin, 1964; V. D. Yablochkin, 1969). Accordingly, the purpose of this study was an investigation of the combination of a complex of volatile substances released by some block, sheet and granulated plastics under conditions simulating the external medium in the process of using polymer construction materials.

Experimental Part

We studied a group of block, sheet and granulated construction materials, including 10 samples on the basis of phenol-formaldehyde resins, polycarbonate (diflon), polyamides, polymethyl methacrylate and butadiene-styrene-acrylonitrile copolymer (ABC resin).

All the samples were investigated at normal (20-40°C) temperature and with an exposure of 10 days. In addition, most of the materials, other than pressed powder and material on the basis of ABC copolymer, was investigated at increased

JPRS 56,499
14 July 72

APPROVED FOR RELEASE: 07/20/2001 CIA-RDP86-00513R002202910020-3"

"APPROVED FOR RELEASE: 07/20/2001 CIA-RDP86-00513R002202910020-3

SHCHIRSKAYA, V. A.

STUDY OF WAYS TO REDUCE THE TOXIC GAS [illegible] OF POLYMERS

(Article by V. [illegible] Yablochkin and V. [illegible], Moscow, Aktual'nyye Voprosy Kosmicheskoy [illegible] i Meditsiny (Current Problems in Space Biology and Medicine), Russian, 1971, pp 305-308)

I. Upgrading of a Compound Based on Butylmethacrylic Ester

The present status of the methods for obtaining polymers does not always make it possible to solve the problem of obtaining synthetic materials not containing and not releasing volatile low-molecular substances. This explains the efforts made to "upgrade" polymers by employing methods for their additional processing (V. D. Bartenev, I. M. Mikhaylova, 1966, 1969; S. L. Danishevskiy, G. A. Salayev, 1968; V. D. Yablochkin, 1966, 1969). In this study we investigated the influence of thermostating and forming of sheets by hot rolling with synthetic resins on the release of volatile substances by a compound based on butylmethacrylic ester. The investigation was made using an earlier developed method (V. D. Yablochkin, 1969).

Thermostating of samples of the compound was accomplished in the air at a temperature of 40°C for periods of 15 and 25 days and at a temperature of 90-130°C for two hours.

Hot rolling of sheets was accomplished using: 10% solution of polycarbonate (diflon) in methyl chloride and a self-adhering silicone seal.

Samples of the compound, subjected to thermostating, were investigated spectrophotometrically in the ultraviolet region for their content of low-molecular substances extracted using ethanol. The results of the investigation can be seen in the figure.

JPRS 56,499
14 July 72

APPROVED FOR RELEASE: 07/20/2001 CIA-RDP86-00513R002202910020-3"

"APPROVED FOR RELEASE: 07/20/2001 CIA-RDP86-00513R002202910020-3

SHCHIRSKAYA, V.A.

STUDY OF VOLATILE SUBSTANCES RELEASED BY POLYMERS BASED ON POLYETHYLENE HALOGEN DERIVATIVES

/Article by Ye. V. Kolchina, V. D. Yablochkin, V. A. Shchirskaya, A. I. Gorshunova and Z. I. Chukhno; Moscow, Aktual'nyye Voprosy Kosmicheskoy Biologii i Meditsiny (Current Problems in Space Biology and Medicine), Russian, 1971, pp 166-169/

Materials based on polyethylene derivatives containing halogens are used extensively in the national economy. Their use in outfitting living quarters and factory rooms is accompanied by the possibility of atmospheric contamination by volatile products which are toxic to man.

The literature contains limited information on the sanitary and chemical characteristics of these groups of polymers. In studies published during recent years various authors mention the possibility that materials with a polyvinyl chloride base can release such toxic compounds as carbon monoxide, dibutyl phthalate, ammonia, hydrogen chloride, chlorocarbon compounds, fatty acids and aldehydes (Ya. G. Dvoskin, et al., 1966; V. D. Yablochkin, 1967; F. L. Kal'manovich, 1968; Ya. G. Dvoskin, 1969). Under these very same conditions materials based on polytetrafluoroethylene release into the atmosphere only insignificant quantities of carbon monoxide and hydrocarbons (V. D. Yablochkin, 1967).

Due to the extensive use of polymers based on polyethylene derivatives containing halogens it seemed desirable to continue investigation of the gas release of samples of a number of the polymer construction materials most frequently used in industry which are based on polyvinyl chloride and polytetrafluoroethylene.

In the sanitary-chemical investigation we selected a group of six materials, three samples each from the polyvinyl

JPRS 56,499
14 JULY 72

APPROVED FOR RELEASE: 07/20/2001 CIA-RDP86-00513R002202910020-3"

"APPROVED FOR RELEASE: 07/20/2001 CIA-RDP86-00513R002202910020-3

USSR UDC: 8.74

POPOV, A. A., LAVRIV, Ya. M., STARCHIK, V. P., CHEKAYLO, M. A., SHUL'GA, V. A., SHCHITKO, V. N., YANENKO, V. M.

"Automated System for Statistical Analysis of Medical and Biological Data"

Kibernet. i vychisl. tekhn. Resp. mezhved. sb. (Cybernetics and Computer Technology. Republic Interdepartmental Collection), 1972, vyp. 14, pp 76-82 (from RZh-Kibernetika, No 5, May 73, abstract No 5V778 by the authors)

Translation: The paper discusses the functioning of an automated system for analysis of medical and biological data. Requirements for the software system are given. Statistical methods and criteria are presented which are realized in the system.

1/1

APPROVED FOR RELEASE: 07/20/2001 CIA-RDP86-00513R002202910020-3"

"APPROVED FOR RELEASE: 07/20/2001 CIA-RDP86-00513R002202910020-3

UDC 547.7:546.185

USSR

KAZYMOV, A. V., SUMSKAYA, E. B., KIRILLOVA, K. M., and SHCHLKINA, Ye. P.,
Kazan' Institute of the Chemico-Photographic Industry

"Reaction of Cyanomethylenephosphonium Salts With Alkoxyvinyl(butadienyl) Derivatives of Heterocyclic Bases"

Leningrad, Zhurnal Obshchey Khimii, Vol 41, No 11, Nov 1971, pp 2,434-2,438

Abstract: Established methods of obtaining trimethinephosphacyanin dyes by chemical synthesis are unsatisfactory, either because of low yield or the presence of undesirable concomitants. The authors investigated the alkoxyvinyl and butadienyl salts of heterocyclic bases as possible sources of these dyes, offering at the same time greater convenience and simplicity in synthesis. Nine phosphorus-containing trimethine and pentamethinecyanin dyes were obtained through condensation of cyanomethylenephosphonium salts with β-alkoxyvinyl and δ-alkoxybutadienyl salts of heterocyclic bases. Optical properties of these, along with some physical data, were obtained. Yields and techniques of synthesis were found to be definitely advantageous in comparison with current methods of producing these dyes.

1/1

APPROVED FOR RELEASE: 07/20/2001 CIA-RDP86-00513R002202910020-3"

"APPROVED FOR RELEASE: 07/20/2001 CIA-RDP86-00513R002202910020-3

UDC: 681.32.004

USSR

OGORODNEYCHUK, I. F., SHCHORS, M. D.

"Sinusoidal Magnetization of Cylindrical Ferrite Cores with Rectangular Cross Section"

Pribory i sistemy avtomatiki. Resp. mezhved. nauchno-tekhn. sb. (Automation Devices and Systems. Republic Interdepartmental Scientific and Technical Collection), 1970, vyp. 11, pp 170-173 (from RZh-Avtomatika, Telemekhanika i vychislitelnaya tekhnika, No 9, Sep 70, Abstract No 9B217)

Translation: This article contains a description of a method of determining the magnetic field intensity in a toroidal core and the coil inductance. A number of proposals for deriving simple calculational formulas are made. From the expressions presented it follows that the magnitude of the complex permeability fairly completely characterizes the core only at low operating frequencies and for small geometric dimensions of the core: that is, for small arguments of cylindrical functions.

1/1

APPROVED FOR RELEASE: 07/20/2001 CIA-RDP86-00513R002202910020-3"

"APPROVED FOR RELEASE: 07/20/2001 CIA-RDP86-00513R002202910020-3

SHCHUCHKIN, V.V.

UDC: 614.23+614.253.5]:658.386.3(477.62)

ORGANIZATION OF ADVANCED TRAINING FOR PHYSICIANS AND PARAMEDICAL PERSONNEL IN DONETSKAYA OBLAST

[Article by G.P. Kobets, head of Donetskaya Oblast Health Department, [redacted] Shchuchkin, deputy head of Donetskaya Oblast Health Department, [redacted] head of the organizational and methodological office; Moscow, Sovetskoye Zdravookhraneniye, Russian, No 9, 1972, submitted 6 April 1972, pp 50-54]

Further improvement of medical care for the people and safeguarding their health, systematic extension of the period of active employment of Soviet people, depend, in many respects, on the competence of public health workers. They solve problems that require profound special knowledge, keeping regularly informed on modern advances in medicine and practice, a high degree of awareness, and a communist attitude toward work.

In our country, the allocations for public health are increasing every year; its material base is expanding; the quantity of medical specialists is growing, and they should be so used as to best meet the demands of working people with regard to accessible and highly qualified medical care. This obligates the administrators of public health organizations and institutions to be properly trained in the field of management, scientific planning, and economics of public health, and to have high personal standards.

There are more than 12,290 physicians and 44,000 paramedical personnel in Donetskaya Oblast. It is a complex task to advance their qualifications and it cannot be fulfilled by referring specific categories of individuals to courses (with absence from work), to institutes, or faculties for advanced training of physicians. For this reason, we are searching for new forms of advanced training for medics, using local bases, and we believe that our experience merits attention.

Advanced training of public health organizers in the oblast, their attendance in classes of modern management methods are offered in three independent groups. A two-year school for public health organizers was established as far back as 1968 for the first group, which included all the

JPRS 57351
27 Oct 72

APPROVED FOR RELEASE: 07/20/2001 CIA-RDP86-00513R002202910020-3"

"APPROVED FOR RELEASE: 07/20/2001 CIA-RDP86-00513R002202910020-3

5

USSR UDC 669.27:669.28:669.26:5. 218.1

BONDARENKO, B. V., and SHCHUKA, A. A., Moscow Physicotechnical Institute

"Electrical Resistance and Structure of Tungsten, Molybdenum, and Chromium Films Produced by Laser Vaporization"

Sverdlovsk, Akademiya Nauk SSSR, Fizika Metallov i Metallovedeniye, V. - XX, No 1, Jul 70, pp 207-210

Abstract: An experimental investigation was made of tungsten, molybdenum, and chromium condensates produced by laser vaporization. A solid neodymium glass laser (output energy ~ 11 j, impulse width 0.5 msec) was used to [illegible] their structure and electrical resistance. The temperature dependence of the specific resistance of the produced films is shown. The specific resistance of the condensates is higher than that of corresponding solid samples, and the temperature coefficient of resistance is lower than that of solid samples in the range of 273-373° C.

1/1

APPROVED FOR RELEASE: 07/20/2001 CIA-RDP86-00513R002202910020-3"

"APPROVED FOR RELEASE: 07/20/2001 CIA-RDP86-00513R002202910020-3

USSR UDC: 621.317.729.2

KUZNETSOV, V. A., SHCHUKA, A. A., Moscow Physicotechnical Institute

"Using a Laser Probe to Study the Sorption Properties of Surfaces"

Moscow, Pribory i Tekhnika Eksperimenta, No 3, May/Jun 72, pp 171-173

Abstract: The laser probe method was used to study desorption of residual gases from the surface of chromium (film deposited on a copper substrate) and tungsten wire. The subcritical power of laser emission was determined by using a field-emission microscope to obtain an image of the irradiated surface of a point with magnification of 10^6 and resolution of 4 Å. A diagram of the experimental installation is shown in the figure. The surface 6 of the study specimen was sealed in a highly evacuated chamber with known spectrum of the residual gases and total pressure of about 10^{-9} mm Hg. A localized inertialess heat source was produced on the specimen surface by ruby laser 1. Pulse duration was registered by oscilloscopic recording of the photocurrent from photomultiplier 11, and the energy was measured by calorimeter 10 with respect to the energy reflected by beam splitter 2. The radiation was focused by optical system 3 onto the specimen through the flat aperture 5 inside device 4. A high vacuum within device 4 was attained with the aid of ionization manometer 7. The mass spectrum of the residual gases was analyzed by omegatron gauge 8.

1/2

APPROVED FOR RELEASE: 07/20/2001 CIA-RDP86-00513R002202910020-3"

"APPROVED FOR RELEASE: 07/20/2001 CIA-RDP86-00513R002202910020-3

USSR

KUZNETSOV, V. A., SHCHUKA, A. A., Pribory i Tekhnika Eksperimenta, No 3, May/Jun 72, pp 171-173

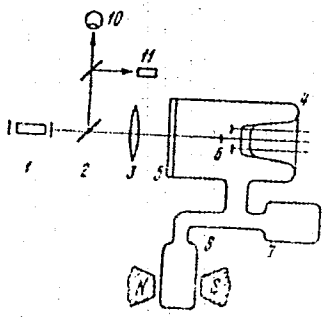

2/2

APPROVED FOR RELEASE: 07/20/2001 CIA-RDP86-00513R002202910020-3"

"APPROVED FOR RELEASE: 07/20/2001 CIA-RDP86-00513R002202910020-3

USSR UDC: 669.28'849'788

FREZE, N. I., SHCHUKIN, A. A., ABALIKHIN, A. V., MAL'TSEV, M. V., MIL'MAN, Yu. V., KURDYUMOVA, G. G.

"All-Union Scientific Research and Design Institute of Refractory Metals and Hard Alloys"

"A Molybdenum-Based Alloy"

Moscow, Otkrytiya, Izobreteniya, Promyshlennyye Obraztsy, Tovarnyye Znaki, No 12, Apr 72, Author's Certificate No 334270, Division C, filed 28 Sep 70, published 30 Mar 72, p 104

Translation: This Author's Certificate introduces a molybdenum-based alloy which contains rhenium. As a distinguishing feature of the patent, the physicomechanical properties of the alloy are improved by adding carbon, taking the components in the following proportions in percent:

rhenium	35-50
carbon	0.02-0.2
molybdenum	base

1/1

APPROVED FOR RELEASE: 07/20/2001 CIA-RDP86-00513R002202910020-3"

"APPROVED FOR RELEASE: 07/20/2001 CIA-RDP86-00513R002202910020-3

USSR UDC 539.56

BELOUS, O. A., DANILOVTSEVA, O. G., KUZNETSOVA, V. A., MAL'TSEV, M. V., MINAKOV, V. N., TREFILOV, V. I., KHACHATUROV, A. A., SHCHUKIN, A. A., Moscow, Kiev. VNIITS (All-Union Scientific Research Institute of Hard Alloys); Institute of Metallophysics. Academy of Sciences, Ukrainian SSR

''An Investigation of the Influence of Admixtures of Carbon and Zirconium Carbide on the Cold Brittleness of Cast Molybdenum''

Kiev, Problemy Prochnosti, No. 6, 1971, pp 97-101

Abstract: An investigation is made of the influence of carbon and zirconium carbide upon the structure of cast molybdenum alloys; and of the relationship of the structure to the temperature of transition to a brittle state. It is found that even for alloys which have a complex structural state, the rules governing the change of the cold-brittleness temperature may be explained if account is taken of the composition of the solid solution, its structural state, and the nature of the formation of excess phases on the grain boundaries. 5 figures, 1 table, 11 references.

1/1

APPROVED FOR RELEASE: 07/20/2001 CIA-RDP86-00513R002202910020-3"

"APPROVED FOR RELEASE: 07/20/2001 CIA-RDP86-00513R002202910020-3

USSR

UDC 621.791.754:669.28

ALEKSEYENKO, G. N., NERODENKO, M. M., Institute of Electric Welding imeni Ye. O. Paton; BIRYUKOVA, T. A., Mal'TSEV, M. V., and SHCHUKIN, A. A., Moscow

"Properties of Mo-C, Mo-Zr-C, and Mo-Ti-C Weld Joints"

Kiev, Avtomaticheskaya Svarka, No 9, Sep 72, pp 20-22

Abstract: The effect of zirconium and titanium on the properties of weld joints for a molybdenum-carbon alloy was investigated. Ingots of the alloys were produced in an electron-beam furnace and rolled into sheet 1 mm thick. The sheets were welded using a tungsten electrode in a controlled helium atmosphere. One heat of the Mo-C alloy contained 0.06% C (heat 1); two heats of the Mo-Zr-C alloy were made, one containing 0.04 wt% C, 0.16 wt.% Zr (heat 2), the other --0.5 wt % C, 0.34 wt.% Zr (heat 3); and two heats of the Mo-Ti-C alloy, one containing 0.05 wt % C, 0.014 wt % Ti (heat 4), the other--0.055 wt % C, 0.026 wt % Ti (heat 5). Alloying with Ti and Zr increased the weld joint ductility but reduced cold brittleness. Ti was less effective than Zr, which is probably associated with the fact that small additions of Ti increase solubility of carbon in Mo in the solid state or bond the carbon into carbides. Ti and Zr also increase strength of the weld joints and seam hardness. Both elements refine the seam metal structure and positively influence the structure of the heat-affected zone, diminishing the extent of the heat-affected zone

1/2

APPROVED FOR RELEASE: 07/20/2001 CIA-RDP86-00513R002202910020-3"

"APPROVED FOR RELEASE: 07/20/2001 CIA-RDP86-00513R002202910020-3

USSR

ALEKSEYENKO, G. N., et al., Avtomaticheskaya Svarka, No 9, Sep 72, pp 20-22

and grain size near the fusion lines. In the study of weld joint mechanical properties it was established that the alloys containing Ti failed primarily in the seam and that these alloys tend to form hot cracks during welding. In contrast to this, weld joints made from the Mo-Zr-C alloys undergo failure both in the seam and along the fusion lines. In summary, additions of Zr refine the structure of the seam metal and heat-affected zone, facilitate the formation of a substructure, and increase strength and ductility of the weld joints, while Ti additions have a lesser effect on the ductility of weld joints made using the Mo-C alloy. 1 Figure, 2 tables, 6 bibliographic references.

2/2

APPROVED FOR RELEASE: 07/20/2001 CIA-RDP86-00513R002202910020-3"

"APPROVED FOR RELEASE: 07/20/2001 CIA-RDP86-00513R002202910020-3

USSR

UDC 621.791.856:669.28

ALEKSEYENKO, G. N., NERODENKO, M. M. (Electric Welding Institute imeni YE. O. PATON, Academy of Sciences Ukrainian SSR), BIRYUKOVA, T. A., DANIYELYAN, T. A., MAL'TSEV, M. V., FREZE, N. I., and SECHUKIN, A. A. (Moscow)

"Effect of Heat Treating on the Properties of Molybdenum-Carbon-Nickel Alloys and Their Weld Joints"

Kiev, Avtomaticheskaya svarka, No 4, Apr 72, pp 47-49

Abstract: The study deals with the properties of intermediate products from TSM-3 structural molybdenum alloy (0.05-0.10% wt % C and 0.01-0.10% Ni) following annealing. The specimens were tensile-tested at room temperature, at $2.5 \cdot 10^{-3}$ sec^{-1} deformation rates and were arc-welded in a controlled inert-gas atmosphere. The specimens were pre-annealed for 1 hour in vacuum (10^{-5} mm Hg) at 800, 1100, 1200, 1300, 1400, 1500, 1600, and 1700°C. Metallographic examinations indicate that recrystallization begins at 1200°C and is completed at 1400°C. Maximum plasticity was shown by specimens with a completely recrystallized structure. Pre-annealing appears to upgrade the weld quality. Nickel tends to concentrate along the grain boundaries and not only hinders carbon diffusion, but also

1/2

APPROVED FOR RELEASE: 07/20/2001 CIA-RDP86-00513R002202910020-3"

"APPROVED FOR RELEASE: 07/20/2001 CIA-RDP86-00513R002202910020-3

USSR

ALEKSEYENKO, G. N., et al, Avtomaticheskaya svarka, No 4, Apr 72, pp 47-49

promotes strengthening of the metal bond in the boundary layers owing to the localized increase of electron concentration. This strengthening of grain boundaries by nickel appears to be the determining factor in raising the plasticity of TSM-3 alloy in recrystallized state. (2 illustrations, 3 tables, 4 bibliographic references)

2/2

APPROVED FOR RELEASE: 07/20/2001 CIA-RDP86-00513R002202910020-3"

"APPROVED FOR RELEASE: 07/20/2001 CIA-RDP86-00513R002202910020-3

USSR

UDC 681.325+62-52

LISICHKIN, D. A., LOSHCHININ, A. A., PROKOSHEVA, V. V., SHISHKOVA, Yu. I., SHCHUKIN, A. I.

Operatsionnyye Ustroystva EVM i Avtomatiki (Operational Devices for Computers and Automation), Moscow, "Sovetskoye Radio," 1972, 255 pp

Abstract: The book proposes methods for designing and determining the characteristics of operational amplifiers and converters for changing analog quantities to digital code. The theory is outlined and methods are presented for determining static and dynamic characteristics and errors. Consideration is given to synthesis of optimum structures for the amplifiers and converters and to ensuring their operational stability. Examples of calculations and circuits for elements in high-amperage converters are given.

A distinguishing feature of the book is analysis of operational devices as complex units, and synthesis of calculations by the method of successive approximations for computer application.

The book is written for engineers and technicians, as well as for advanced college and university students as a text in the development and design of operational amplifiers and analog-digital converters.

1/1

APPROVED FOR RELEASE: 07/20/2001 CIA-RDP86-00513R002202910020-3"

"APPROVED FOR RELEASE: 07/20/2001 CIA-RDP86-00513R002202910020-3

USSR UDC 621.317.743

MELENT'YEV, V. V., RABINOVICH, Yu. I., and SHCHUKIN, G. G.

"Airplane Measurements of Radio Illumination of the Subsurface"

Moscow, V sb. X Vses. konf. po rasprostr. radiovoln. Tezisy dokl. Sekts. 5 (Tenth All-Union Conference on the Propagation of Radio Waves; Report Theses; Section 5--collection of works) "Nauka," 1972, pp 119-124 (from RZh--Radiotekhnika, No 10, 1972, Abstract No 10A429)

Translation: Results are given of measurements of the radio intensity temperature of a turbulent sea surface as a function of the sighting angle for horizontal polarization in waves of 0.8, 1.35, 1.6, and 3.2 cm, at various wave heights in the sea and at an airplane altitude of 300 m. The increase in radio intensity temperature with increases in sea-wave height for horizontal polarization is established. Data is also given on airplane measurements of forest and snow cover. It is shown that from measurements of the absolute values of the radio intensity temperature and the polarization characteristics of the subsurface, its structure, temperature, humidity, as well as their distribution in the subsurface layer, can be determined. Four illustrations, bibliography of one.

APPROVED FOR RELEASE: 07/20/2001 CIA-RDP86-00513R002202910020-3"

"APPROVED FOR RELEASE: 07/20/2001 CIA-RDP86-00513R002202910020-3

USSR

UDC 681.325.54

SHCHUKIN, L. B.

"An Arithmetic Device"

Moscow, Otkrytiya, Izobreteniya, Promyshlennyye Obraztsy, Tovarnyye Znaki, No 9, 1970, pp 129-130, Patent No 264782, filed 9 Aug 68

Abstract: This Author's Certificate introduces an arithmetic unit which contains a parallel adder, an asynchronous control unit, and also a decoder, accumulators, and a delay line. The distinguishing feature of the patent is a reduction in carry time in adding operations without increasing the number of digital places in the adder equipment. Like buses of several groups of digits in both addends, with one or more digits in each group, are connected to the decoder inputs. The output buses of the decoder are connected by groups to the collection buses corresponding to various carry times. The outputs of the accumulators are connected to the inputs of the delay line, and the output of the delay line is connected to the control unit.

1/1

APPROVED FOR RELEASE: 07/20/2001 CIA-RDP86-00513R002202910020-3"

"APPROVED FOR RELEASE: 07/20/2001 CIA-RDP86-00513R002202910020-3

AA0043378

S

UR 0482

Soviet Inventions Illustrated, Section II Electrical, Derwent,

2/70

242965 ELEMENT "OR" has an additional non square Coop core (3) added. It works in two steps. First into the winding (7) or (8) is applied a writing signal. In the second step, to the core (3) is applied an input signal (windings 9 to 11) this induces into winding (5) an E.M.F. which opens transistor (2) - base-emitter path. Positive coupling between collector and base of the transistor causes simultaneous increase of collector and base current which passes through the diode (4). A pulse is produced in the ferro-transistorised circuit 1.3.69 as 1222266/18-24. L.B.SHCHUKIN(17.9.69)Bul 16/ 5.5.69. Class 21a1. Int.Cl.H 03k.

1/2

4

19761646

APPROVED FOR RELEASE: 07/20/2001 CIA-RDP86-00513R002202910020-3"

"APPROVED FOR RELEASE: 07/20/2001 CIA-RDP86-00513R002202910020-3

AA0043378

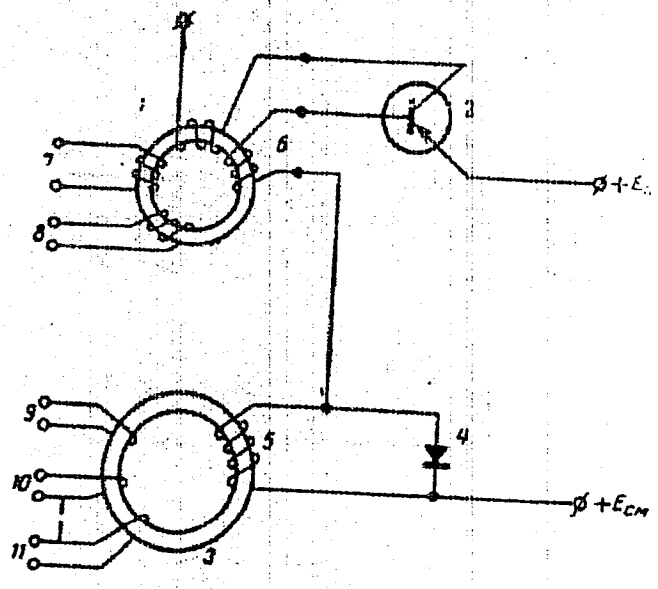

2/2

1976164 7

APPROVED FOR RELEASE: 07/20/2001 CIA-RDP86-00513R002202910020-3"

"APPROVED FOR RELEASE: 07/20/2001 CIA-RDP86-00513R002202910020-3

USSR

RUBTSOV, M. I., SPORYKHIN, V. I., PERVUSHEVEKIY, V. P., MOROZOV, V. F., LUTSET, B. Ya., SHCHUKIN, L. I.

"Impulse Gas-Discharge Light Source"

Otkrytiya Izobreteniya Promyshlennye Obrazts Tovarnye Znaki, No 31, 1972, Patent No 355694.

Translation: 1. An impulse gas-discharge light source with an optically transparent tubular bulb, within which are a dielectric plate, used to elongate the discharge channel and electrode units assembled on one side of the bulb and separated by the plate, differing in that in order to increase the evenness of radiation in the plane perpendicular to the axis of the tube, increase the electrical breakdown resistance and limiting electrical loads on the discharge device, the dielectric plate is bent into a screw shape in the zone of the discharge, forming bifillar spiral channels with its two large edges, connected together by a channel, while the two small edges are hermetically sealed to the inside of the bulb, thus limiting the discharge channel.

2. A light source according to Claim 1, differing in that in order to increase the stability to the effects of mechanical loads, the electrodes are made as truncated cones, compressed against the side surface of the bulb wall.

1/2

APPROVED FOR RELEASE: 07/20/2001 CIA-RDP86-00513R002202910020-3"

"APPROVED FOR RELEASE: 07/20/2001 CIA-RDP86-00513R002202910020-3

USSR

(2)

RUBTSOV, M. I., SPORYKHIN, V. I., ET. AL., Otkrytiya Izobreteniya Promyshlennye Obraztsy Tovarnyye Znaki, No 5, 1972, Patent No 355694.

2/2

APPROVED FOR RELEASE: 07/20/2001 CIA-RDP86-00513R002202910020-3"

"APPROVED FOR RELEASE: 07/20/2001 CIA-RDP86-00513R002202910020-3

USSR UDC 656.61.052

KRASNIKOV, V. S., LUR'YE, I. YU., SHCHUKIN, V. B.

"Optimization of a Ship Course-Keeping System"

Leningrad, Sudostroyeniye, No 10, 1971, pp 40-42

Abstract: A mathematical simulation method is proposed for optimization of a ship course-keeping system. The control system and results of the simulation are depicted graphically. Use of a relay course-keeping system with one control input interval permits a decrease in the energy losses during maneuvering to be obtained by comparison with other relay systems. The proposed relay-course-keeping system has a great advantage as a result of simplification of the operating conditions of the steering system. Practical implementation of the developed system does not require significant changes in the existing course-keeping system especially since it can easily be made optimal with respect to speed. The investigated principle for constructing a course-keeping system for the maneuvering mode can also be used for the automatic course stabilization mode. Optimalness of operation of the system is based on minimizing the following criterion:

$$J = \int_0^t |\Delta v| dt,$$

APPROVED FOR RELEASE: 07/20/2001 CIA-RDP86-00513R002202910020-3"

"APPROVED FOR RELEASE: 07/20/2001 CIA-RDP86-00513R002202910020-3

USSR

KRASNIKOV, V. S., et al., Sudostroyeniye, No 10, 1971, pp 32-34

where Δv is the speed loss of the ship on changing course;

t is the time of making the optimalness estimate.

2/2

APPROVED FOR RELEASE: 07/20/2001 CIA-RDP86-00513R002202910020-3"

"APPROVED FOR RELEASE: 07/20/2001 CIA-RDP86-00513R002202910020-3

USSR

UDC: 629.7.036.3:533.697.4.001.4

SHCHUKIN, V. K., POLIKARPOV, P. A., FILIN, V. A., KHALATOV, A. A., YAKSHIN. A. P.

"Influence of Entry Conditions on Heat Exchange in Nozzles"

Tr. Kaz. Aviats. In-ta [Works of Kazakh Aviation Institute], 1972, No 151, pp 3-10 (Translated from Referativnyy Zhurnal Aviatsionnyye i Raketnyye Dvigateli, No 5, 1973, Abstract No 5.34.59).

Translation: A description is presented of an experimental installation for the study of unstable convective heat exchange in nozzles. Results are presented from an experimental study of the local heat transfer in a nozzle when a heat insulated pipe with a diameter equal to the input diameter of the nozzle and a relative length l/d = 1, 2, 5, 10 or 15 is connected to its input, or when a cylindrical sleeve is placed at the output of the nozzle with various central aperture diameters. 3 figures, 10 biblio. refs.

1/1

APPROVED FOR RELEASE: 07/20/2001 CIA-RDP86-00513R002202910020-3"

"APPROVED FOR RELEASE: 07/20/2001 CIA-RDP86-00513R002202910020-3

USSR

UDC:629.78.002.3

SHCHUKIN, V.K., DRESVYANNIKOV, F.N., BAYGALIYEV, B.E. and GOLIN, N.P.

"Experimental Investigation of Degradation Heat of Polymethylmethacrylate as Function of Temperature and Pressure"

Kazan', Tr. Kazan. Aviats. In-ta (Transactions of Kazan' Aviation Institute), 1972, vyp 151, pp 30-35 (from Referativnyy Zhurnal-Raketostroyeniye, 1973, Abstract No 4.41.210)

Translation: Degradation heat of N-polymethylmethacrylate in the temperature range of 777-1100°K and pressures 0.1-7 ton/m^2 was investigated experimentally. It was established that the degradation heat decreases with the increase of pressure. The experimental data were reduced by the least square method and approximated by the equation H=f(P, T). 3 illustrations. 3 references. Author's resume.

1/1

APPROVED FOR RELEASE: 07/20/2001 CIA-RDP86-00513R002202910020-3"

"APPROVED FOR RELEASE: 07/20/2001 CIA-RDP86-00513R002202910020-3

USSR UDC 536.24

SHCHUKIN, V. K., IDIATULLIN, N. S., GOLDOBEYEV, V. I. and KIRSANOV, YU. A.

"Investigation of Heat Transfer With Flow Through Wire-Mesh"

Kazan', Tr. Kazan. Aviats. In-ta (Works of Kazan' Aviation Institute), No 133, 1971, pp 62-71 (from Referativnyy Zhurnal-Aviatsionnyye i Raketnyye Dvigateli, No 2, Feb 72, Abstract No 2.34.116)

Translation: The results of the practical application of the gradient method to the investigation of heat transfer near a porous wall are presented. Direct measurements of the temperature distribution through the thickness of the wall made out of wire mesh serve as a basis for determining the heat flux to the surface of the wall and the heat transfer coefficient with the flow of gas through the wall. The wire mesh package and the test setup are described. The results of tests for flow without vortex agree with known data. Some new experimental data on heat transfer with vortex gas flow have been obtained. 6 illustrations. 12 references.

1/1

APPROVED FOR RELEASE: 07/20/2001 CIA-RDP86-00513R002202910020-3"

"APPROVED FOR RELEASE: 07/20/2001 CIA-RDP86-00513R002202910020-3

Heat, Combustion, Detonation

USSR UDC 536.24

SHCHUKIN, V. K., IDIATULLIN, N. S.

"Gradient Method of Studying Heat Exchange Near a Permeable Surface With Two-Dimensional Temperature Distribution"

Tr. Kazan' aviats. in-ta (Works of the Kazan' Aviation Institute), 1971, vyp. 128, pp 79-88 (from RZh-Mekhanika, No 10, Oct 71, Abstract No 10B647)

Translation: The authors consider the theoretical principles of experimental determination of the local coefficient of heat transfer near a permeable wall from the temperature gradient on the heat-exchange surface. It is assumed that the temperature field of the porous wall varies both transversely and longitudinally. The numerical solution of the equation of heat conduction in the wall is used for determining the temperature gradient on the surface in the flow. A difference scheme is given as well as expressions which approximate the boundary conditions. Simplifying assumptions are presented which reduce the problem to the one-dimensional case. Expressions are given for evaluating the grid spacing for a solution of the required accuracy. V. D. Vilenskiy.

1/1

APPROVED FOR RELEASE: 07/20/2001 CIA-RDP86-00513R002202910020-3"

"APPROVED FOR RELEASE: 07/20/2001 CIA-RDP86-00513R002202910020-3

1/2 022 UNCLASSIFIED PROCESSING DATE--18SEP70

TITLE--GRADIENT METHOD FOR INVESTIGATING HEAT TRANSFER IN CHANNELS OF VARIABLE CROSS SECTION -U-

AUTHOR-(02)-KHALATOV, A.A., SHCHUKIN, V.K.

COUNTRY OF INFO--USSR

SOURCE--AVIATSIONNAIA TEKHNIKA, IZV. VUZ VOL. 13, NO. 4, 1969, 121-128

DATE PUBLISHED-------70

SUBJECT AREAS--PHYSICS

TOPIC TAGS--HEAT TRANSFER COEFFICIENT, HEAT TRANSFER THEORY

CONTROL MARKING--NO RESTRICTIONS

DOCUMENT CLASS--UNCLASSIFIED

PROXY REEL/FRAME--1979/1605 STEP NO--UR/0147/69/012/004/0121/0128

CIRC ACCESSION NO--AP0047927

UNCLASSIFIED

APPROVED FOR RELEASE: 07/20/2001 CIA-RDP86-00513R002202910020-3"

"APPROVED FOR RELEASE: 07/20/2001 CIA-RDP86-00513R002202910020-3

UNCLASSIFIED PROCESSING DATE--18SEP70

2/2 022

CIRC ACCESSION NO--AP0047927

ABSTRACT/EXTRACT--(U) GP-0- ABSTRACT. DEVELOPMENT OF A METHOD OF DETERMINING LOCAL HEAT TRANSFER COEFFICIENTS UNDER STATIONARY CONDITIONS ON THE BASIS OF THE TEMPERATURE DISTRIBUTION MEASURED AT THE CONTOUR OF THE LONGITUDINAL CROSS SECTION OF THE WALL, WITH SUBSEQUENT DETERMINATION OF THE TEMPERATURE GRADIENTS FROM A NUMERICAL COMPUTATION OF THE TEMPERATURE FIELD. THE METHOD IS VERIFIED EXPERIMENTALLY FOR A CHANNEL CONSISTING OF TWO CYLINDRICAL, A SPHERICAL, AND A CONICAL PARTS.

APPROVED FOR RELEASE: 07/20/2001 CIA-RDP86-00513R002202910020-3"

"APPROVED FOR RELEASE: 07/20/2001 CIA-RDP86-00513R002202910020-3

USSR

SHCHUKIN, V. N., ALEKSEYEV, A. M.

"Optimization of Plans for Development and Placement of Branches of Industry"

Optimizatsiya Planov Razvitiya i Raxmeshcheniya Otrasley Promyshlennosti [English Version Above], Novosibirsk, 1971, 169 pages (Translated from Referativnyy Zhurnal, Kibernetika, No 2, 1972, Abstract No 2 V652 K, unsigned).

Translation: The book will be abstracted article-by-article.

1/1

APPROVED FOR RELEASE: 07/20/2001 CIA-RDP86-00513R002202910020-3"

"APPROVED FOR RELEASE: 07/20/2001 CIA-RDP86-00513R002202910020-3

USSR

SHCHUKIN, V. N., MIRONOSETSKAYA, I. S.

"Solution of the Problem of Prospective Branch Planning Using Several Optimality Criteria"

Optimiz. Planov Razv. i Razmeshch. Otrasley Prom-sti [Optimization of Plans for Development and Placement of Branches of Industry -- Collection of Works], Novosibirsk, 1971, pp 39-56 (Translated from Referativnyy Zhurnal, Kibernetika, No 2, 1972, Abstract No 2 V505 by M. Kazakova).

Translation: A multi-criterion problem of branch planning is studied. First, problems with particular criteria are solved. Then, by comparing the optimal values of goal functions with values produced for the optima of the remaining criteria, the so-called "loss" and "gain" arising upon deviation from the optimum are calculated. When the permissible relationship between gain for one criterion and loss for another are established by the expert method, an acceptable solution of the problem can be found.

1/1

APPROVED FOR RELEASE: 07/20/2001 CIA-RDP86-00513R002202910020-3"

"APPROVED FOR RELEASE: 07/20/2001 CIA-RDP86-00513R002202910020-3

SHCHUKIN V.V.

Acc. Nr: AA0108699 Abstracting Service: Ref. Code: UR 0482

Soviet Inventions Illustrated, Section III Mechanical and General, Derwent, 3/70

241222 HYDRAULIC PRESS comprises frame 1, columns 2, slide 3, head 4, fixed traverse 5 with tiebars 6, ejector rams 7 and its supporting movable traverse 8. The latter is attached to tail end 9 sliding in guides 10 of the fixed traverse, so that it can take up eccentric loads resulting in tension of the tiebars. The traverse carries out its operating stroke when fluid is fed into cylinders 11, whereas cylinders 12 ensure the return stroke. The frame holds table 13 with nests for inserts 14, the removal of which causes eccentric loading of traverse 8, and the rams 7 may then be used as eccentric pressing units.

18.8.67. as 1182432/25-27, SHCHUKIN, V.V., KERZHKOVSKII, E.I. and S.G. KHIRDZHIEV et al. (9.9.69) Bul. 13/1.4.69. Class 58a, Int. Cl. B 30b.

18

CK

1/3

REEL/FRAME 19900441

APPROVED FOR RELEASE: 07/20/2001 CIA-RDP86-00513R002202910020-3"

"APPROVED FOR RELEASE: 07/20/2001 CIA-RDP86-00513R002202910020-3

A A0108699

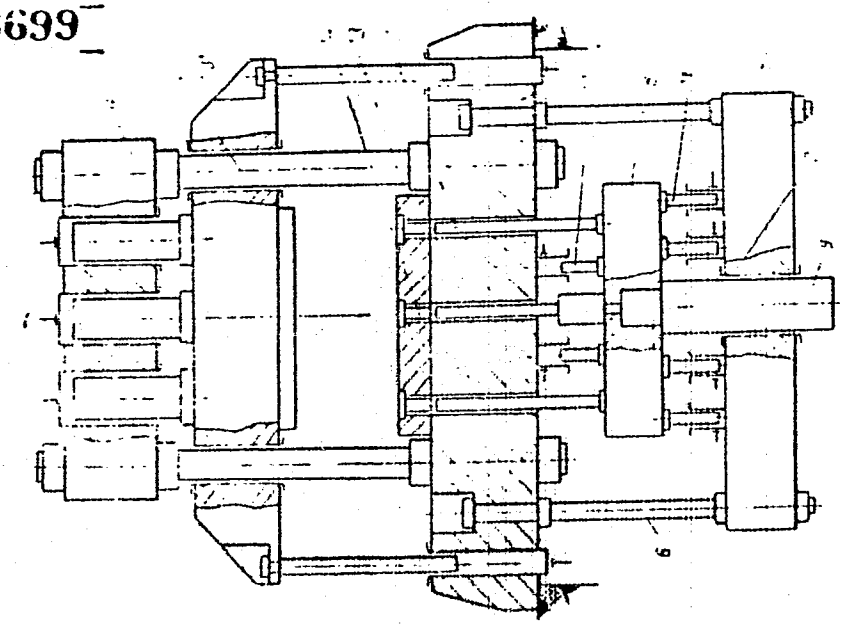

2/3

19900442

APPROVED FOR RELEASE: 07/20/2001 CIA-RDP86-00513R002202910020-3"

"APPROVED FOR RELEASE: 07/20/2001 CIA-RDP86-00513R002202910020-3

AA0108699

AUTHORS: Shchukin, V. V.; Kerzhkovskiy, E. I.; Khirdzhiyev, S. G.; Baranov, L. F.

3/3

19900443

APPROVED FOR RELEASE: 07/20/2001 CIA-RDP86-00513R002202910020-3"

"APPROVED FOR RELEASE: 07/20/2001 CIA-RDP86-00513R002202910020-3

USSR

UDC: 669.71

AMELINA, Ye. A., PARFENOVA, A. M., SHCHUKIN, Ye. D., Moscow

"Influence of Thin Layers of Diphilic Molecules (Surfactants) on the Formation of Contacts in Porous Dispersed Structures Arising Upon Pressing of Powders"

Moscow, Fizika i Khimiya Obrabotki Materialov [The Physics and Chemistry of Materials Processing], No 6, Nov-Dec 73, pp 118-122.

Abstract: The influence of layers of octadecylamine and cetyl alcohol on the surfaces of dispersed particles on the process of formation of contacts in porous dispersed structures arising upon pressing of NaCl powders is studied. All of the layers studied, regardless of their thickness, prevent contact between NaCl particles due to valent forces, i.e., hinder the formation of phase contacts with NaCl-NaCl contact surfaces, and reduce the strength of the structure produced. The greatest screening effect is achieved at a certain critical particle compression force. The screening effect is independent of layer thickness. The critical particle compression force is a quantitative characteristic of the physical properties of the layers of diphilic molecules on the solid surface.

1/1

APPROVED FOR RELEASE: 07/20/2001 CIA-RDP86-00513R002202910020-3"

"APPROVED FOR RELEASE: 07/20/2001 CIA-RDP86-00513R002202910020-3

USSR UDC 539.37

REBINDER, the late P. A., and SHCHUKIN, YE. D., Institute of Physical Chemistry, Academy of Sciences USSR

"Surface Phenomena in Solids During Their Deformation and Destruction"

Moscow, Uspekhi Fizicheskikh Nauk, Vol 108, No 1, Sep 72, pp 3-42

Abstract: The article is a survey dealing with the facilitation of deformation and destruction processes in solids as a result of the reversible physicochemical effect of the medium. Along with the authors' laboratories at the Institute of Physical Chemistry, Academy of Sciences USSR, and in the Chemistry Faculty of Moscow State University, studies on the effect of surface-active media on the mechanical properties of solids have been intensively developed by a number of other scientific collectives and schools: viz., S. T. KISHKIN and YA. M. POTAK and coworkers in Moscow; G. V. KARPENKO and coworkers in L'vov; W. ROSTOKER, J. WESTBROOK, A. WESTWOOD, and coworkers in the United States; etc. The purpose of the article is to describe the principal ideas and directions which have been developed in the authors' work, illustrating them with individual examples from the works of P. A. REBINDER, V. I. LIKHTMAN, G. V. KARPENKO, YE. D. SHCHUKIN, N. V. PERTSOV, et al.

1/4

APPROVED FOR RELEASE: 07/20/2001 CIA-RDP86-00513R002202910020-3"

"APPROVED FOR RELEASE: 07/20/2001 CIA-RDP86-00513R002202910020-3

USSR

REBINDER, the late P. A., and SHCHUKIN, YE. D., Uspekhi Fizicheskikh Nauk, Vol 108, No 1, Sep 72, pp 3-42

The facilitation effects have now been established for every type of solid: for hard metals (and some covalent crystals) on contact with liquid metals; for ionic crystals and inorganic glasses in the presence of molten salts, water, alcohols, and other polar media; for molecular crystals of organic compounds on contact with nonpolar and low-polarity organic liquids. The general nature of these phenomena is facilitation of the rupture and reconstruction of interatomic bonds in the presence of certain foreign atoms or molecules (possessing sufficient mobility to assure their penetration of the bond rupture zone) and can be described as a decrease in the free surface energy of a given solid under the influence of the surrounding medium. The principal condition for the strong effect of the medium on the mechanical properties of a solid (in the considered cases of a reversible adsorption interaction unrelated to dissolution, corrosion, or other chemical processes) is the related nature of the solid and the medium, which causes low surface energy values at the gas-solid interface. At the same time, the form and degree of manifestation of these effects depend on the real structure of the

2/4

APPROVED FOR RELEASE: 07/20/2001 CIA-RDP86-00513R002202910020-3"

"APPROVED FOR RELEASE: 07/20/2001 CIA-RDP86-00513R002202910020-3

USSR

REBINDER, the late P. A., and SHCHUKIN, YE. D., Uspekhi Fizicheskikh Nauk, Vol 108, No 1, Sep 72, pp 3-42

solid (defects) and deformation conditions — stresses, temperature, deformation rate, contact time,etc. The optimum combination of these factors makes it possible to use the effect of the medium to facilitate dispersion and treatment processes, especially for hard materials and those which are difficult to treat. On the other hand, the elimination of individual factors necessary for the adsorption reduction of strength opens up ways of protecting against the effect of the medium.

Urgent problems in this field include the development of thorough experimental research, especially under "pure" reproducible conditions, as well as a further theoretical analysis of the mechanism for the elementary events of bond rupture and reconstruction with the participation of foreign atoms or molecules. Such "intermediate" phenomena as the effect of chemical adsorption on mechanical characteristics; mechanical treatment when chemical, electrochemical,or mechanochemical reactions take place on the surface of a solid; and stress corrosion should be covered more fully. A study of the

3/4

APPROVED FOR RELEASE: 07/20/2001 CIA-RDP86-00513R002202910020-3"

"APPROVED FOR RELEASE: 07/20/2001 CIA-RDP86-00513R002202910020-3

USSR

REBINDER, the late P. A., and SHCHUKIN, YE. D., Uspekhi Fizicheskikh Nauk, Vol 108, No 1, Sep 72, pp 3-42

effect of active media on adhesion strength along interfaces in various macro- and microheterogeneous materials is of interest. In addition to construction materials, new — geological and biological — objects ought to be studied.

The article mentions work done by the following: V. S. YUSHCHENKO, YU. V. NAYDICH, V. G., BRAVINSKIY, M. S. ASLANOVA, V. YU. TRASKIN, S. I. KONTOROVICH, L. YA. MARGOLIS, YE. A. SINEVICH, A. N. TYNNYY, G. M. BARTENEV, YU. S. ZUYEV, V. A. KARGIN, P. V. KOZLOV, T. YU. LYUBIMOVA, B. I. KOSTETSKIY.

4/4

APPROVED FOR RELEASE: 07/20/2001 CIA-RDP86-00513R002202910020-3"

"APPROVED FOR RELEASE: 07/20/2001 CIA-RDP86-00513R002202910020-3

21/2 012 UNCLASSIFIED PROCESSING DATE--02OCT70

TITLE--REGULARITIES IN THE STRENGTH DECREASE OF ZEOLITE PELLETS UNDER ACTION OF WATER AND BENZENE VAPORS -U-

AUTHOR-(05)-SLEPNEVA, A.T., LIPKIND, B.A., DUKAREVICH, M.V., KONTOROVICH, S.I., SHCHUKIN, YE.D.

COUNTRY OF INFO--USSR

SOURCE--KOLLOIDNYY ZHURNAL, 1970, VOL 32, NR 2, PP 251-254

DATE PUBLISHED--------70

SUBJECT AREAS--CHEMISTRY

TOPIC TAGS--ZEOLITE, WATER, BENZENE, ADSORPTION

CONTROL MARKING--NO RESTRICTIONS

DOCUMENT CLASS--UNCLASSIFIED

PROXY REEL/FRAME--1992/1553 STEP NO--UR/0069/70/032/002/0251/0254

CIRC ACCESSION NO--AP0112547

UNCLASSIFIED

APPROVED FOR RELEASE: 07/20/2001 CIA-RDP86-00513R002202910020-3"

"APPROVED FOR RELEASE: 07/20/2001 CIA-RDP86-00513R002202910020-3

UNCLASSIFIED PROCESSING DATE--02OCT70

2/2 012

CIRC ACCESSION NO--AP0112547

ABSTRACT/EXTRACT--(U) GP-0- ABSTRACT. THE EFFECT OF MOISTENING BY WATER AND BENZENE VAPORS ON THE STRENGTH OF THE SAMPLES OF KAOLINITE CLAY AND ZEOLITES NAA AND NAX, CONTAINING 20PERCENT CLAY AS BINDING AGENT, HAS BEEN STUDIED. MOISTENING OF CLAY AND ZEOLITE SAMPLES INVOLVES A STRENGTH DECREASE ASSOCIATED WITH THE LOWERING OF THE FREE SURFACE ENERGY DURING ADSORPTION. THE SORPTION OF WATER AND BENZENE MOLECULES BY INTERNAL CAVITIES OF ZEOLITE CRYSTALS REDUCES THE STRENGTH DECREASE IF THE LIQUID CONTENT DOES NOT EXCEED 10-20PERCENT OF THE ADSORPTION CAPACITY OF ZEOLITES.

UNCLASSIFIED

APPROVED FOR RELEASE: 07/20/2001 CIA-RDP86-00513R002202910020-3"

"APPROVED FOR RELEASE: 07/20/2001 CIA-RDP86-00513R002202910020-3

1/2 042 UNCLASSIFIED PROCESSING DATE--04DEC70

TITLE--PHYSICO CHEMICAL EFFECT OF THE MEDIUM ON THE DEFORMATION, RUPTURE, AND PROCESSING OF SOLIDS -U-

AUTHOR-(02)-PERTSOV, N.V., SHCHUKIN, YE.D.

5

COUNTRY OF INFO--USSR

SOURCE--FIZIKA I KHIM. OBRABOT. MAT., MAR.-APR. 1970, (2), 60-82

DATE PUBLISHED--------70

SUBJECT AREAS--MECH., IND., CIVIL AND MARINE ENGR, MATERIALS

TOPIC TAGS--METAL CRYSTAL, SURFACE ACTIVE AGENT, BIBLIOGRAPHY, METAL CORROSION, ADSORPTION, METAL DEFORMATION, DUCTILITY, METAL MACHINING, DEFORMATION RESISTANCE, METAL CRACKING, RUPTURE STRENGTH, MECHANICAL PROPERTY

CONTROL MARKING--NO RESTRICTIONS

DOCUMENT CLASS--UNCLASSIFIED

PROXY REEL/FRAME--3003/0318 STEP NO--UR/0472/70/000/002/0060/0082

CIRC ACCESSION NO--AP0129550

UNCLASSIFIED

APPROVED FOR RELEASE: 07/20/2001 CIA-RDP86-00513R002202910020-3"

"APPROVED FOR RELEASE: 07/20/2001 CIA-RDP86-00513R002202910020-3

UNCLASSIFIED PROCESSING DATE--04DEC70

2/2 042

CIRC ACCESSION NO--AP0129550

ABSTRACT/EXTRACT--(U) GP-0- ABSTRACT. THE EFFECT OF THE SURROUNDING MEDIUM ON THE PHYSICAL, CHEMICAL, AND MECHANICAL PROPERTIES OF METALLIC CRYSTALS AND POLYCRYSTALLINE AGGREGATES IS REVIEWED WITH SPECIAL REF. TO ADSORPTION PHENOMENA AND THE PHYSICO CHEMICAL INFLUENCE OF SURFACE ACTIVE MATERIALS ON THE DEFORMATION RESISTANCE, DUCTILITY, RUPTURE, AND WORKING (MACHINING) OF METALS. THE PRACTICAL IMPORTANCE OF SURFACE ACTIVE SUBSTANCES IS PARTICULARLY EVIDENT IN CONNECTION WITH PROBLEMS OF CORROSION AND THE PROTECTION OF METALS, AND A BETTER UNDERSTANDING OF THEIR EFFECTS IN ONE OF THE MOST PRESSING PROBLEMS OF TODAY.

UNCLASSIFIED

APPROVED FOR RELEASE: 07/20/2001 CIA-RDP86-00513R002202910020-3"

"APPROVED FOR RELEASE: 07/20/2001 CIA-RDP86-00513R002202910020-3

1/2 024 UNCLASSIFIED PROCESSING DATE--20NOV70

TITLE--EVALUATION OF THE STRENGTH OF INDIVIDUAL CONTACTS BETWEEN SMALL CRYSTALS IN POROUS BODIES -U-

AUTHOR-(04)-SHCHUKIN, YE.D., AMELINA, YE.A., YUSUPOV, R.K., REBINDER, P.A.

COUNTRY OF INFO--USSR

SOURCE--DOKL. AKAD. NAUK SSSR 1970, 191(5), 1037-40 (TECH PHYS) (RUSS)

DATE PUBLISHED--------70

SUBJECT AREAS--PHYSICS

TOPIC TAGS--COHESION STRENGTH, POROSITY, CRYSTAL SURFACE, NAPHTHALENE, AMMONIUM NITRATE, THERMAL PROCESS

CONTROL MARKING--NO RESTRICTIONS

DOCUMENT CLASS--UNCLASSIFIED

PROXY REEL/FRAME--3003/1496 STEP NO--UR/0020/70/191/005/1037/1040

CIRC ACCESSION NO--AT0130425

UNCLASSIFIED

APPROVED FOR RELEASE: 07/20/2001 CIA-RDP86-00513R002202910020-3"

"APPROVED FOR RELEASE: 07/20/2001 CIA-RDP86-00513R002202910020-3

2/2 024 UNCLASSIFIED PROCESSING DATE--20NOV70

CIRC ACCESSION NO--AT0130425

ABSTRACT/EXTRACT--(U) GP-0- ABSTRACT. FINELY GROUND POWDERS OF NAPHTHALENE AND OF NH SUB4 NO SUB3 AS WELL AS SINGLE CRYSTALS OF THESE SUBSTANCES WERE COMPRESSED OR HEATED TO FUSION UNDER VERY CAREFULLY CONTROLLED CONDITIONS. THE POROUS PRODUCTS THUS OBTAINED WERE THEN SUBJECTED TO FORCES OF OPPOSITE SIGN. THE FORCE REQUIRED TO BREAK THE CONTACT ESTABLISHED BY EITHER COMPRESSION OR HEAT, DIVIDED BY THE AREA OF THE SPECIMEN GAVE THE STRENGTH OF THE INDIVIDUAL CONTACT. THIS METHOD ENABLED DIRECT MEASUREMENT OF THE COHESIVE FORCES OF INDIVIDUAL CONTACTS FROM THOUSANDTHS OF A DYNE TO SEVERAL HUNDRED DYNES. THE RESULTS ARE PLOTTED ON DISTRIBUTION CURVES. FACILITY: MOSK. GOS. UNIV. IM. LOMONOSOVA, MOSCOW, USSR.

UNCLASSIFIED

APPROVED FOR RELEASE: 07/20/2001 CIA-RDP86-00513R002202910020-3"

"APPROVED FOR RELEASE: 07/20/2001 CIA-RDP86-00513R002202910020-3

1/2 021 UNCLASSIFIED PROCESSING DATE--02OCT70

TITLE--INTERNAL STRESSES IN THE STRUCTURES OF HYDRATION HARDENING OF MINERAL BINDING MATERIALS -U-

AUTHOR-(03)-KONTOROVICH, S.I., MALIKOVA, ZH.G., SHCHUKIN, YE.D.

COUNTRY OF INFO--USSR

SOURCE--KOLLOIDNYY ZHURNAL, 1970, VOL 32, NR 2, PP 224-228

DATE PUBLISHED-------70

SUBJECT AREAS--MATERIALS, EARTH SCIENCES AND OCEANOGRAPHY

TOPIC TAGS--MINERAL, INTERNAL STRESS, CALCIUM OXIDE, MAGNESIUM OXIDE, CRYSTALLIZATION, CRYSTAL STRUCTURE

CONTROL MARKING--NO RESTRICTIONS

DOCUMENT CLASS--UNCLASSIFIED

PROXY REEL/FRAME--1990/0769 STEP NO--UR/0069/70/032/002/0224/0228

CIRC ACCESSION NO--AP0108970

UNCLASSIFIED

APPROVED FOR RELEASE: 07/20/2001 CIA-RDP86-00513R002202910020-3"

"APPROVED FOR RELEASE: 07/20/2001 CIA-RDP86-00513R002202910020-3

1/2 011 UNCLASSIFIED PROCESSING DATE--11SEP70

TITLE--MEASUREMENT OF THE (MECHANICAL) STRENGTH OF CATALYSTS UNDER STATIC CONDITIONS -U-

AUTHOR--BESSONOV, A.I., SHCHUKIN, YE.D.

S

COUNTRY OF INFO--USSR

SOURCE--KINET. KATAL. 1970, 11(1) 215-27

DATE PUBLISHED-------70

SUBJECT AREAS--CHEMISTRY

TOPIC TAGS--CATALYST, MECHANICAL STRENGTH

CONTROL MARKING--NO RESTRICTIONS

DOCUMENT CLASS--UNCLASSIFIED

PROXY REEL/FRAME--1989/0201 STEP NO--UR/0195/70/011/001/0215/0227

CIRC ACCESSION NO--AP0106957

UNCLASSIFIED

2/2 021 UNCLASSIFIED PROCESSING DATE--02OCT70

CIRC ACCESSION NO--AP0108970

ABSTRACT/EXTRACT--[illegible] ROEN[illegible]

APPROVED FOR RELEASE: 07/20/2001 CIA-RDP86-00513R002202910020-3"

MADE OF THE EFFECT OF SOME PHYSICO CHEMICAL FACTORS ON THE VALUE OF INTERNAL STRESSES OF THE SECOND KIND ARISING DURING HYDRATION HARDENING OF MAGNESIUM AND CALCIUM OXIDES. DECREASE OF THE W-S RATIO AND OF THE PARTICLE SIZE OF INITIAL BINDING MATERIAL INCREASES MICROSTRESSES, WHEREAS ADDITION OF A FILLER, OF CRYSTALLIZATION SEEDS AND ELECTROLYTE DIMINISHES MICROSTRESSES IN CRYSTALLIZATION STRUCTURES.

UNCLASSIFIED

"APPROVED FOR RELEASE: 07/20/2001 CIA-RDP86-00513R002202910020-3

UNCLASSIFIED PROCESSING DATE--11SEP70

2/2 011

CIRC ACCESSION NO--AP0106857

ABSTRACT/EXTRACT--(U) GP-0- ABSTRACT. AN APP. IS CONSTRUCTED FOR THE MEASUREMENT OF THE MECH. STABILITY OF CATALYSTS, SORBENTS, AND CARRIERS.

0123

UNCLASSIFIED

APPROVED FOR RELEASE: 07/20/2001 CIA-RDP86-00513R002202910020-3"

"APPROVED FOR RELEASE: 07/20/2001 CIA-RDP86-00513R002202910020-3

UNCLASSIFIED PROCESSING DATE--02OCT70

1/3 012

TITLE--DETECTION OF DEEP SEISMICALLY ACTIVE FAULTS ON THE BASIS OF MACROSEISMIC DATA -U-

AUTHOR-(02)-SHCHUKIN, YU.K., DOBREV, T.B.

S

COUNTRY OF INFO--USSR, BULGARIA

SOURCE--MOSCOW, IZVESTIYA AKADEMII NAUK SSSR, FIZIKA ZEMLI, NO 3, 1970, PP 68-74

DATE PUBLISHED--------70

SUBJECT AREAS--EARTH SCIENCES AND OCEANOGRAPHY

TOPIC TAGS--GEOLOGIC FAULT, MAP, SEISMICITY

CONTROL MARKING--NO RESTRICTIONS

DOCUMENT CLASS--UNCLASSIFIED

STEP NO--UR/0387/70/000/003/0068/0074

PROXY REEL/FRAME--1992/1038

CIRC ACCESSION NO--AP0112180

UNCLASSIFIED

APPROVED FOR RELEASE: 07/20/2001 CIA-RDP86-00513R002202910020-3"

"APPROVED FOR RELEASE: 07/20/2001 CIA-RDP86-00513R002202910020-3

UNCLASSIFIED PROCESSING DATE--02OCT70

2/3 012

CIRC ACCESSION NO--AP0112180

ABSTRACT/EXTRACT--(U) GP-0- ABSTRACT. A METHOD OF STATISTICAL PROCESSING OF MACROSEISMIC DATA IS PROPOSED FOR IDENTIFYING SEISMICALLY ACTIVE FAULTS AND FOCAL ZONES ASSOCIATED WITH THEM. THE METHOD IS BASED ON THE MAPPING OF SEISMIC LINES REPRESENTING THE DIRECTION OF MAXIMUM RELEASE OF SEISMIC ENERGY AND ALONG WHICH THE MAXIMUM TREMORS OCCUR. FOR SEISMOGEOLOGICAL PURPOSES IT IS OF INTEREST TO CONSIDER THE TOTAL EFFECT OF SEISMIC LINES IN GROUPS, NOT INDIVIDUAL LINES. THE TOTAL EFFECT, LIKE PHYSICAL FIELDS, CAN BE EXPRESSED THROUGH THE FLUX (DENSITY) OF THESE LINES PER UNIT AREA. IT IS ASSUMED THAT DETERMINATION OF THE DENSITY OF SEISMIC LINES CAN PROVIDE INFORMATION ON THE MOST PROBABLE POSITION OF EXTENDED FOCAL ZONES, SEISMICALLY ACTIVE FAULTS AND THE POINTS OF THEIR INTERSECTION. GRIDS WITH GRID SQUARES MEASURING 120 AND 480 KM PRIME2 WERE USED FOR COMPUTING AND COMPILING MAPS OF SEISMIC LINE DENSITY. ON THE INITIAL MAP THE SEISMIC LINES WERE CLASSIFIED AS "WELL EXPRESSED" AND "LESS WELL EXPRESSED" AND ASSIGNED THE WEIGHTS 2 AND 1. NINETEEN OF THE BEST EXPRESSED EXTREMAL ZONES OF SEISMIC LINE DENSITY WERE DETERMINED FOR BULGARIA. THE GENERALIZED SEISMIC LINES CORRELATE WELL WITH GEOLOGICAL GEOPHYSICAL DATA FOR DEEP FAULTS IN THAT COUNTRY AND MAKE POSSIBLE A MORE PRECISE DETERMINATION OF KNOWN AND SOME STILL UNKNOWN DEEP FAULTS. MOST OF THE GENERALIZED SEISMIC LINES SHOW THE DIRECTION AND LENGTH OF SEISMICALLY ACTIVE REGIONAL FAULTS. DEDUCTIONS CAN BE MADE CONCERNING THE INTERRELATIONSHIPS BETWEEN INDIVIDUAL FAULTS DETERMINING THE COMPLEX CONFIGURATION OF MAJOR BLOCKS IN THE EARTH'S CRUST.

UNCLASSIFIED

APPROVED FOR RELEASE: 07/20/2001 CIA-RDP86-00513R002202910020-3"

"APPROVED FOR RELEASE: 07/20/2001 CIA-RDP86-00513R002202910020-3

UNCLASSIFIED PROCESSING DATE--02OCT70

3/3 012

CIRC ACCESSION NO--AP0112180

ABSTRACT/EXTRACT--AN INCREASE IN THE DENSITY OF SEISMIC LINES IS EVIDENTLY ASSOCIATED WITH BRANCHING AND INTERSECTION OF FAULTS IN DIFFERENT SYSTEMS. ALL THIS INFORMATION, TOGETHER WITH VERTICAL SECTIONS, CAN BE USED IN JUDGING THE REAL EXTENT OF A HYPOCENTRAL REGION FOR THE PURPOSES OF SEISMIC REGIONALIZATION. (FIG. 2 IS A MAP OF SEISMIC LINES FOR BULGARIA BASED ON EARTHQUAKES FOR THE YEARS 1891 THROUGH 1961; FIG. 3 IS A CORRESPONDING MAP SHOWING SEISMIC LINE DENSITY WHEN A UNIT AREA OF 120 KM PRIME2 WAS USED; FIG. 4 SHOWS THE SAME, BUT FOR A UNIT AREA OF 500 KM PRIME2 (THERE IS NO SIGNIFICANT DIFFERENCES BETWEEN FIGURES 3 AND 4); FIG. 5 IS A MAP OF FAULTS AND BLOCKS IN BULGARIA; FIG. 6 IS A MAP OF SPECIFIC SEISMIC ENERGY FOR BULGARIA DURING THE YEARS 1900-1962.

FACILITY: MINISTRY OF GEOLOGY USSR, ALL UNION SCIENTIFIC RESEARCH INSTITUTE OF GEOPHYSICAL PROSPECTING METHODS FACILITY: SOFIA HIGHER MINING AND GEOLOGICAL INSTITUTE.

UNCLASSIFIED

APPROVED FOR RELEASE: 07/20/2001 CIA-RDP86-00513R002202910020-3"

"APPROVED FOR RELEASE: 07/20/2001 CIA-RDP86-00513R002202910020-3

1.

USSR

YUSHKOV, V. I., POLAKIN, V. N., KHOLODKOV, V. K., GRUZINOV, V. K., SHCHUKIN, Yu. P.

"A Plasmatron With Magnetic Arc Stabilization"

Moscow, Khimiya i Fizika Nizkotemperaturnoy Plazmy, Moscow University Press, 1971, pp [illegible]

Abstract: The authors investigate the behavior of an arc on a pilot model of a plasmatron with magnetic stabilization (diagrammed in the figure). The central uncooled graphite electrode 2 with outside diameter of 30 mm and the outer water-cooled copper electrode 1 of helical type with inside diameter of 50 mm are connected to a DC source. The outer conductor is surrounded by stabilizing coil 3 connected to an AC source. The arc was struck by a short high-voltage rf pulse. The arc is rotated by the magnetic field produced by the outer electrode and the stabilizing coil. The shape of the outer electrode converts the arc to a helical line. Current alternation through the stabilizing coil reverses motion of the arc. Lens 4 projects a full-size image of the arc on the ground glass at the rear of camera 5. Four type FSM-1 resistors are fastened by pairs on the

1/3

APPROVED FOR RELEASE: 07/20/2001 CIA-RDP86-00513R002202910020-3"

"APPROVED FOR RELEASE: 07/20/2001 CIA-RDP86-00513R002202910020-3

USSR

YUSHKOV, V. I. et al., Khimiya i Fizika Nizkotemperaturnoy Plazmy, Moscow University Press, 1971, pp 62-64

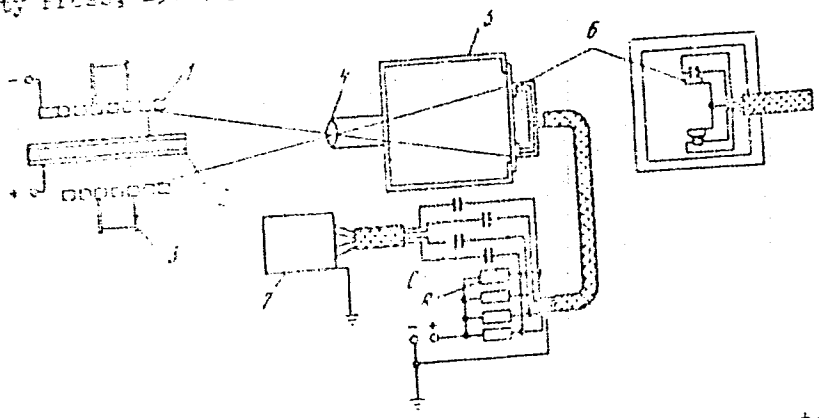

ground glass as shown by 6. Each of these resistors is connected in series to a load resistor 7 and a DC voltage source. The rotating arc is periodically projected on the photoresistors, with a resultant increase in the drop in voltage across load resistors R. The variable component of the

2/3

APPROVED FOR RELEASE: 07/20/2001 CIA-RDP86-00513R002202910020-3"

"APPROVED FOR RELEASE: 07/20/2001 CIA-RDP86-00513R002202910020-3

USSR

YUSHKOV, V. I. et al., [illegible] the High-temperature Plasma, Moscow University Press, 1971, pp [illegible]

voltage from the load resistors is sent through capacitors C to the loops of oscilloscope [illegible]. Preliminary analysis of materials obtained by this method shows that the proposed plasmatron design should be suitable for heating various gaseous and powdered materials. Two figures, bibliography of four titles.

3/3

APPROVED FOR RELEASE: 07/20/2001 CIA-RDP86-00513R002202910020-3"

"APPROVED FOR RELEASE: 07/20/2001 CIA-RDP86-00513R002202910020-3

UDC 547.76'241:542.952.1

USSR

ARBUZOV, B. A., VIZEL', A. O., GINIYATULLIN, R. S., and SHCHUKINA, L. I.,
Institute of Organic and Physical Chemistry imeni A. ye. Arbuzov, Academy of Sciences USSR, Kazan'

"Isomerization of 1-Oxo-chlorophospholenes in Presence of Phosphorus Trichloride"

Riga, Khimiya Geterotsiklicheskikh Soyedineniy, No 12, Dec 71, pp 1616-1619

Abstract: The effect of phosphorus trichloride on 1-oxo-1-chlorophospholenes was studied. Heating the phospholenes to 130-160° in presence of PCl_3 leads to a migration of the double bond: phospholenes-3 are converted to derivatives of phospholenes-2 at a high conversion yield. The reverse process is difficult. Further experiments have shown that dry hydrogen chloride is incapable of causing similar double bond migration. No migration was observed also in case of 3-methyl- and 4-methylphospholenes. Anotherwords, during the synthesis of phospholene derivatives, isomerization may occur due to the presence of PCl_3, leading to a mixture of products.

1/1

APPROVED FOR RELEASE: 07/20/2001 CIA-RDP86-00513R002202910020-3"

"APPROVED FOR RELEASE: 07/20/2001 CIA-RDP86-00513R002202910020-3

USSR

VASIL'YEVA, V. F., et al., Khimiko-Farmatsevticheskiy Zhurnal, Vol 7, No 9, Sep 73, pp 19-21

static activity: 6-phenylazo-2-bensyl-1,2,3,4-tetrahydroquinoline; 6-phenylazo-1-(γ-dimethylaminopropyl)-2-benzyl-1,2,3,4-tetrahydroquinoline hydrochloride, and 6-(p-nitrophenylazo)-1-(γ-dimethylaminopropyl)-2--benzyl-1,2,3,4-tetrahydroquinoline.

2/2

APPROVED FOR RELEASE: 07/20/2001 CIA-RDP86-00513R002202910020-3"

"APPROVED FOR RELEASE: 07/20/2001 CIA-RDP86-00513R002202910020-3

UDC 612.821.6+612.822.3

USSR

SYRENSKIY, V. I. and ShChUKINA, N. V., Laboratory of the Physiology of Higher Nervous Activity, Scientific Research Institute of Child and Adolescent Physiology, Academy of Pedagogical Sciences USSR, Leningrad

"Study of Reinforcement Mechanisms by the Method of Correlation EEG Analysis"

Moscow, Zhurnal Vysshey Nervnoy Deyatel'nosti, Vol 23, No 3, May/Jun 73, pp 661-663

Abstract: A group of schoolchildren was tested in a study of bioelectrical brain activity to determine whether the correlation method of EEG analysis is applicable to analysis of reinforcement and non-reinforcement mechanisms. The children were tested while drawing; their own evaluations, positive or negative, served as reinforcement or non-reinforcement. It was found that, in the case of non-reinforcement, there were more qualitative and quantitative changes in relationships between electrical activity in various cortical areas than in the case of reinforcement. The results corresponded to the literature on similar experiments. It was concluded that the correlation method of processing EEG data yields sufficient information to be applicable to such studies.

1/1

APPROVED FOR RELEASE: 07/20/2001 CIA-RDP86-00513R002202910020-3"

"APPROVED FOR RELEASE: 07/20/2001 CIA-RDP86-00513R002202910020-3

UNCLASSIFIED

1/2 008 PROCESSING DATE--04DEC70

TITLE--INDUSTRIAL PRODUCTION OF ALKYLHYDROXAMIC ACIDS REAGENT IM-50 -U-

AUTHOR-(02)-SHCHUKINA, N.YE., RYABOY, V.I.

COUNTRY OF INFO--USSR

SOURCE--KHIM. PROM. (MOSCOW) 1970, 46(3), 228

DATE PUBLISHED--------70

SUBJECT AREAS--CHEMISTRY, BEHAVIORAL AND SOCIAL SCIENCES

TOPIC TAGS--INDUSTRIAL PRODUCTION, ALKYL RADICAL, HYDROXAMIC ACID/(U)IM50 ALKYLHYDROXAMIC ACID

CONTROL MARKING--NO RESTRICTIONS

DOCUMENT CLASS--UNCLASSIFIED

PROXY FICHE NO----FD70/605012/C11 STEP NO--UR/0064/70/046/003/0228/0228

CIRC ACCESSION NO--AP0140278

UNCLASSIFIED

APPROVED FOR RELEASE: 07/20/2001 CIA-RDP86-00513R002202910020-3"

"APPROVED FOR RELEASE: 07/20/2001 CIA-RDP86-00513R002202910020-3

UNCLASSIFIED PROCESSING DATE--04DEC70

2/2 008

CIRC ACCESSION NO--AP0140278

ABSTRACT/EXTRACT--(U) GP-0- ABSTRACT. ONE MOLE C SUB7-9 FATTY ACIDS ME ESTERS AND 1.45 MOLES HYDROXYLAMINE SULFATE (AS A 12-14PERCENT AQ. SOLN.) IS MIXED IN AN ENAMELED VESSEL, 7.39-7.82 MOLES NAOH (AS A 53-60PERCENT AQ. SOLN.) ADDED, AT 20-25DEGREES, AND THE MIXT. AGITATED AT 20-25DEGREES FOR 2 HR. HEATED AT 55-60DEGREES FOR 1 HR H SUB2 O ADDED AND ACIDIFIED TO PH 4-5 AT LESS THAN 40DEGREES TO GIVE AN OILY ORG. LAYER WHICH CONTAINS 65-70PERCENT FREE ALKYLHYDROXAMIC ACIDS (I), 7-20PERCENT FATTY ACIDS AND THE BALANCE H SUB2 O; THE YIELD OF I IS 72-8PERCENT.

UNCLASSIFIED

APPROVED FOR RELEASE: 07/20/2001 CIA-RDP86-00513R002202910020-3"

"APPROVED FOR RELEASE: 07/20/2001 CIA-RDP86-00513R002202910020-3

UNCLASSIFIED PROCESSING DATE--11DEC70

1/2 028

TITLE--LATITUDINAL VARIATIONS OF IONIZATION RECOMBINATION PARAMETERS -U-

AUTHOR-(02)-NIKANOROVA, R.SH., SHCHUKINA, T.B.

COUNTRY OF INFO--USSR

SOURCE--STUDIES OF THE IONOSPHERE (ISSLEDOVANIE IONOSFERY). (A70-37026 18-13) NOVOSIBIRSK, IZDATEL'STVO NAUKA, 1970, P 114-123.

DATE PUBLISHED--------70

SUBJECT AREAS--ATMOSPHERIC SCIENCES

TOPIC TAGS--ION RECOMBINATION, DIURNAL VARIATION, IONIZATION, F LAYER

CONTROL MARKING--NO RESTRICTIONS

DOCUMENT CLASS--UNCLASSIFIED

PROXY FICHE NO----FD70/605028/F08 STEP NO--UR/0000/70/000/000/0114/0123

CIRC ACCESSION NO--AT0141667

UNCLASSIFIED

APPROVED FOR RELEASE: 07/20/2001 CIA-RDP86-00513R002202910020-3"

"APPROVED FOR RELEASE: 07/20/2001 CIA-RDP86-00513R002202910020-3

UNCLASSIFIED PROCESSING DATE--11DEC70

2/2 028

CIRC ACCESSION NO--AT0141667

ABSTRACT/EXTRACT--(U) GP-0- ABSTRACT. DETERMINATION OF IONIZATION RECOMBINATION PARAMETERS ON THE BASIS OF DATA FOR DIURNAL VARIATIONS OF THE ELECTRON CONCENTRATION IN THE F2 LAYER MAXIMUM. THE PARAMETERS WERE DETERMINED WITH THE AID OF AN ANALOG COMPUTER USED TO SOLVE A SYSTEM OF CONTINUITY EQUATIONS FOR ELECTRONS AND MOLECULAR IONS. FOR 19 POINTS WITHIN LATITUDE INTERVALS BETWEEN 30 AND 60 DEG IN THE NORTHERN AND SOUTHERN HEMISPHERES, NOONTIME IONIZATION RATES WERE DETERMINED ALONG WITH THE PRODUCT OF THE DISSOCIATION RECOMBINATION RATE AND THE MOLECULAR ION CONCENTRATION. THE PRODUCT OF THE ION MOLECULAR REACTION COEFFICIENT BY THE CONCENTRATION OF THE MOLECULAR COMPONENT CONCENTRATION WAS ALSO DETERMINED. THE MAXIMUM VALUES OF THE RECOMBINATION PARAMETERS ARE OBTAINED FOR THE INTERVAL BETWEEN 40 AND 45 DEG.

UNCLASSIFIED

APPROVED FOR RELEASE: 07/20/2001 CIA-RDP86-00513R002202910020-3"

"APPROVED FOR RELEASE: 07/20/2001 CIA-RDP86-00513R002202910020-3

1/2 017 UNCLASSIFIED PROCESSING DATE--30OCT70

TITLE--AN AUTOMOTIVE DYNAMOMETRIC MACHINE WITH A TRACTIVE FORCE OF UP TO 10 TONS -U-

AUTHOR-(03)-KRESTOVNIKOV, G.A., PEVUNCHIKOV, V.I., SHCHUKLIN, S.A.

COUNTRY OF INFO--USSR

SOURCE--MOSCOW, AVTOMOBIL'NAYA PROMYSHELENNOST', NO 2, 1970, PP 14-16

DATE PUBLISHED--------70

SUBJECT AREAS--MECH., IND., CIVIL AND MARINE ENGR

TOPIC TAGS--DYNAMOMETER, AUTOMOBILE, HYDRODYNAMICS/(U)MAZ501 AUTOMOBILE

CONTROL MARKING--NO RESTRICTIONS

DOCUMENT CLASS--UNCLASSIFIED

PROXY REEL/FRAME--1999/1221 STEP NO--UR/0113/70/000/002/0014/0016

CIRC ACCESSION NO--AP0123185

UNCLASSIFIED

APPROVED FOR RELEASE: 07/20/2001 CIA-RDP86-00513R002202910020-3"

"APPROVED FOR RELEASE: 07/20/2001 CIA-RDP86-00513R002202910020-3

UNCLASSIFIED PROCESSING DATE--30OCT70

2/2 017

CIRC ACCESSION NO--AP0123185

ABSTRACT/EXTRACT--(U) GP-0- ABSTRACT. AN AUTOMOTIVE DYNAMOMETRIC MACHINE HAS BEEN PRODUCED WITH A HYDRODYNAMIC BRAKING UNIT BASED ON THE MAZ-501 AUTOMOBILE. THE MACHINE IS DISTINGUISHED BY THE HIGH STABILITY OF ITS BRAKING REGIMES, RELIABILITY, AND OPERATION.

UNCLASSIFIED

APPROVED FOR RELEASE: 07/20/2001 CIA-RDP86-00513R002202910020-3"

"APPROVED FOR RELEASE: 07/20/2001 CIA-RDP86-00513R002202910020-3

1/2 018 UNCLASSIFIED PROCESSING DATE--23OCT70

TITLE--THERMAL CONDITIONS IN THE SOUTH POLE REGION OF MARS -U-

AUTHOR-(02)-ALESHIN, V.I., SHCHUKO, O.B.

S

COUNTRY OF INFO--USSR

SOURCE--ASTRONOMICHESKII ZHURNAL, VOL. 47, NO. 2, 1970, P. 392-396

DATE PUBLISHED--------70

SUBJECT AREAS--ASTRONOMY,ASTROPHYSICS

TOPIC TAGS--POLAR AREA, MARS PLANET, SOIL, CARBON DIOXIDE

CONTROL MARKING--NO RESTRICTIONS

DOCUMENT CLASS--UNCLASSIFIED

PROXY REEL/FRAME--2000/1756 STEP NO--UR/0033/70/047/002/0392/0396

CIRC ACCESSION NO--AP0125372

UNCLASSIFIED

APPROVED FOR RELEASE: 07/20/2001 CIA-RDP86-00513R002202910020-3"