"APPROVED FOR RELEASE: 09/17/2001 CIA-RDP86-00513R002203010020-1

AA0040762

UR 0482

Soviet Inventions Illustrated, Section I Chemical, Derwent,

241482 CONTROLLED ATMOSPHERE FURNACE SEALING involves connecting the inter-seal space or lock alternately to atmosphere and a neutral gas at known pressure. This seals the locks and prevent toxic gases escaping. In order to maintain gas pressure sufficient to prevent gas escape through the seal into the surrounding shop, the header (6) is coupled to the tank (13) filled with oil or water (14). The immersion depth of the tube (12) determines the optimum excess gas pressure in the lock so that by changing the immersion the optimum sealing conditions can be achieved. (15) checks gas pressure in the lock, so that excess gas can be syphoned off (16). Where short-supply or toxic gases are used, neutral gas can be valved (17) into the lock and held at less, more or equal pressure to that in the furnace itself. This counterpressure safely seals the furnace contents from the surrounding area.

12.2.68 as 1222511/22-1. MATIN, YA.I. & SHVEDOV, V.A. (9.9.69) Bul 14/18.4.69. Class 18c. Int.Cl.C 21d.

19750454

APPROVED FOR RELEASE: 09/17/2001 CIA-RDP86-00513R002203010020-1"

"APPROVED FOR RELEASE: 09/17/2001 CIA-RDP86-00513R002203010020-1

AA0040762

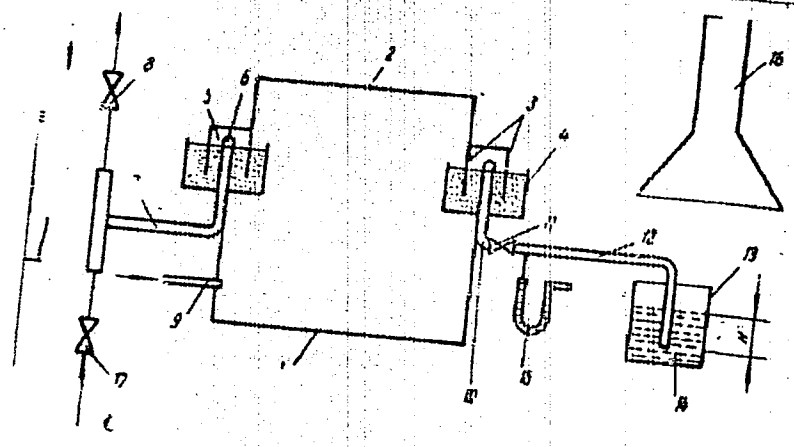

3/2

19750455

APPROVED FOR RELEASE: 09/17/2001 CIA-RDP86-00513R002203010020-1"

"APPROVED FOR RELEASE: 09/17/2001 CIA-RDP86-00513R002203010020-1

USSR

UDC 547.752.753.755.07:542.953

SHVEDOV, V. I., PANISHEVA, Ye. K., VLASOVA, T. F., GRINEV, A. N., USSR
Institute of Chemical-Pharmaceutical Scientific Research imeni S. Ordzhonikidze, Moscow

"The Synthesis and Aminomethylation of 6-Hydroxyindoles"

Riga, Akademiya Nauk Latviiskoy SSR, Himiya Geterotsiklicheskikh Soedinenii, No 10, Oct 73, pp 1354-1356

Abstract: It was found that, while reaction of p-benzoquinone with β-aminocrotonic ester or N-methyl-β-aminocrotonic ester at 0°C in acetic acid produced 5-hydroxyindoles, the reaction of p-benzoquinone with N-aryl-β-aminocrotonic ester under the same conditions produced 6-hydroxyindoles. Thus, the substituent on nitrogen determines whether the ester reacts at the double bond or the carbonyl group of p-benzoquinone. Reacting the 6-hydroxyindoles with bisdimethylaminomethane produced 6-hydroxy-7-dimethylaminomethylindoles. Bromination and nitration of 6-methoxyindoles and 6-acetoxyindoles led to substitution at position number 5, which is explained by the fact that bromination and nitration take place in acid solution, and aminomethylation in basic. Structure determination was by NMR spectroscopy.

1/1

APPROVED FOR RELEASE: 09/17/2001 CIA-RDP86-00513R002203010020-1"

"APPROVED FOR RELEASE: 09/17/2001 CIA-RDP86-00513R002203010020-1

Nitrogen Compounds

USSR

UDC 615.225.2:547.567.3].012.1:542.9

SHVEDOV, V. I., KURILO, G. N., and GRINEV, A. N., All-Union Scientific Research Institute of Pharmaceutical Chemistry imeni S. Ordzhonikidze, Moscow

"Research in the Field of Quinones. XLVIII. Synthesis of Derivatives of 2-Benzyl-5-oxyindole and 2-Benzyl-5-oxybenzindole"

Moscow, Khimiko-Farmatsevticheskiy Zhurnal, Vol 4, No 9, Sep 70, pp 7-12

Abstract: The article suggests a method for the synthesis of derivatives of 2-benzyl-3-carbomethoxy-5-oxyindole and 2-benzyl-3-carbomethoxy-5-oxybenzindole, which are intermediates in the synthesis of structural analogs of serotonin. The derivatives are obtained by condensation of p-benzoquinone or 1,4-naphthoquinone with the methyl ester of N-substituted or unsubstituted β-amino- γ-phenylcrotonic acid. Methylation of the derivatives with dimethyl sulfate in an alkaline solution converts them to derivatives of 2-benzyl-3-carbomethoxy-5-methoxyindole and 2-benzyl-3-carbomethoxy-5-methoxybenzindole. Hydrolysis of the

1/2

APPROVED FOR RELEASE: 09/17/2001 CIA-RDP86-00513R002203010020-1"

"APPROVED FOR RELEASE: 09/17/2001 CIA-RDP86-00513R002203010020-1

USSR

SHVEDOV, V. I., et al., Khimiko-Farmatsevticheskiy Zhurnal, Vol 4, No 9, Sep 70, pp 7-12

latter gives corresponding-2-benzyl-3-carboxy-5-methoxyindoles and 2-benzyl-3-carboxy-5-methoxybenzindoles. IR and UV spectra were taken of the resultant compounds.

2/2

APPROVED FOR RELEASE: 09/17/2001 CIA-RDP86-00513R002203010020-1"

"APPROVED FOR RELEASE: 09/17/2001 CIA-RDP86-00513R002203010020-1

UDC 615.214:547.759

USSR

MASHKOVSKIY, M. O., GRINEV, A. N., ANDREYEVA, N. I., SHVEDOV, V. I., and ALTUKHOVA, L. B., Laboratory of Pharmacology and Laboratory of Synthesis, All-Union Scientific Chemical-Pharmaceutical Research Institute imeni S. Ordzhonikidze, Moscow

"Investigation of the Psychotropic Activity of 1,10-Trimethylenepyrazino [1,2-a]indole"

Moscow, Farmakologiya i Toksikologiya, Vol 34, No 4, Jul-Aug 71, pp 387-391

Abstract: Five novel derivatives of 1,10-trimethylenepiperazino[1,2-a]indole (I) and two derived from 1,10-trimethylenepyrazino[1,2-a]indole (II) were studied in respect to their psychotropic activity (reaction to the effect of phenamine and reserpine on mice and rats, cataleptic activity of these materials on rats, their effect on body temperature and overall state of mice). The derivatives of (I) were found to be more active, especially those without any substituents in the ring, those with a methoxy group in position 8 and methyl group in 2 and 8 position of the heterocycle. By their activity these substances resemble the antidepressants of the tricyclic structural type such as imizines. Derivatives of (II) exhibited a

1/2

APPROVED FOR RELEASE: 09/17/2001 CIA-RDP86-00513R002203010020-1"

"APPROVED FOR RELEASE: 09/17/2001 CIA-RDP86-00513R002203010020-1

USSR

MASHKOVSKIY, M. O., et al., Farmakologiya i Toksikologiya, Vol 34, No 4, Jul-Aug 71, pp 387-391

definitely lower activity. Transition from a tertiary amine derivative of (I) to a quaternary amine lowered its activity.

2/2

APPROVED FOR RELEASE: 09/17/2001 CIA-RDP86-00513R002203010020-1"

"APPROVED FOR RELEASE: 09/17/2001 CIA-RDP86-00513R002203010020-1

UDC 547.861.3'752

USSR

SHVEDOV, V. I., ALTUKHOVA, L. B., and GRINEV, A. N., All-Union Scientific Research Chemico Pharmaceutical Institute imeni Sergo Ordzhonikidze, Moscow, Ministry of Health USSR

"N-Acyl and N-Alkyl Derivatives of 1,10-Trimethylenepiperazino (1,2-a)indole"

Moscow, Khimiko-Farmatsevticheskiy Zhurnal, Vol 4, No 7, 1970, pp 5-7

Abstract: Methods were developed for synthesizing the N-alkyl and N-acyl derivatives of piperazino91,2-a)indole, which exhibits antihistaminic and hypotensive action. The N-acyl derivatives (I-IV) were obtained by acylation of 8-methyl-1,10,trimethylene-piperazino(1,2-a)indole with acetic anhydride or acid chlorides. Alkylation of derivatives of piperazino(1,2-a)indole by ordinary alkylating agents occurs with complications and leads to formation of resinous products. N-alkyl derivatives can be obtained by indirect methods. Hydrogenation of iodomethylates (VII and VIII) over skeletal nickel catalyst leads to the corresponding N-methyl derivatives (IX and X), while reduction of N-acetyl-8-methyl-1, 10-trimethylenepiperazino (1,2-a)indole(1) with lithium aluminum hydride yields the N-ethyl derivates (XI).

APPROVED FOR RELEASE: 09/17/2001 CIA-RDP86-00513R002203010020-1"

"APPROVED FOR RELEASE: 09/17/2001 CIA-RDP86-00513R002203010020-1

USSR

SHVEDOV, V. I., et al., Khimiko-Farmatsevticheskiy Zhurnal, Vol 4, No 7, 1970, pp 5-7

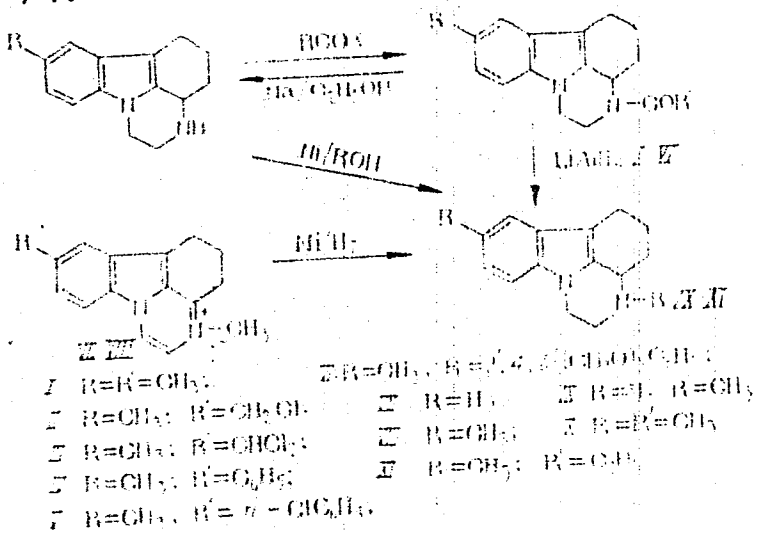

2/2

APPROVED FOR RELEASE: 09/17/2001 CIA-RDP86-00513R002203010020-1"

"APPROVED FOR RELEASE: 09/17/2001 CIA-RDP86-00513R002203010020-1

UNCLASSIFIED PROCESSING DATE--13NOV70

1/2 011

TITLE--DIALKYLAMINOALKYL DERIVATIVES OF INDOLE OR TETRAHYDROCARBAZOLE -U-

AUTHOR-(03)-SHVEDOV, V.I., GRINEV, A.N., ALTUKHOVA, L.B.

5

COUNTRY OF INFO--USSR

SOURCE--USSR 265,885

REFERENCE--OTKRYTIYA, IZOBRET., PROM. OBRAZTSY, TOVARNYE ZNAKI 1970,

DATE PUBLISHED--17MAR70

SUBJECT AREAS--CHEMISTRY

TOPIC TAGS--AMINE DERIVATIVE, INDOLE, ORGANIC AZOLE COMPOUND, HYDROXYL RADICAL, CHEMICAL PATENT

CONTROL MARKING--NO RESTRICTIONS

DOCUMENT CLASS--UNCLASSIFIED

STEP NO--UR/0482/70/000/000/0000/0000

PROXY REEL/FRAME--3002/1481

CIRC ACCESSION NO--AA0123880

UNCLASSIFIED

APPROVED FOR RELEASE: 09/17/2001 CIA-RDP86-00513R002203010020-1"

"APPROVED FOR RELEASE: 09/17/2001 CIA-RDP86-00513R002203010020-1

2/2 011 UNCLASSIFIED PROCESSING DATE--13NOV70

CIRC ACCESSION NO--AA0128880

ABSTRACT/EXTRACT--(U) GP-0- ABSTRACT. TITLE COMPDS, ARE PREPD. BY TREATING O METAL DERIVS. OF 5,HYDROXYINDOLES OR N, METAL DERIVS. OF SUBSTITUTED INDOLES OR TETRAHYDROCARBAZOLES WITH A HALOALKYLDIALKYL AMINE AT 120-50DEGREES. FACILITY: ORDZHONIKIDZE, S., ALL UNION SCIENTIFIC RESEARCH CHEMICAL PHARMACEUTICAL INSTITUTE.

UNCLASSIFIED

APPROVED FOR RELEASE: 09/17/2001 CIA-RDP86-00513R002203010020-1"

"APPROVED FOR RELEASE: 09/17/2001 CIA-RDP86-00513R002203010020-1

1/2 012 UNCLASSIFIED PROCESSING DATE--13NOV70

TITLE--SYNTHESIS OF PYRROLO,1,2,ALPHA,PYRIMIDINE DERIVATIVES -U-

AUTHOR-(04)-SHVEDOV, V.I., KHARIZOMENOVA, I.A., ALTUKHOVA, L.B., GRINEV, A.N.

COUNTRY OF INFO--USSR

SOURCE--KHIM. GETEROTSIKL. SOEDIN. 1970, (3), 428

DATE PUBLISHED--------70

SUBJECT AREAS--CHEMISTRY, BIOLOGICAL AND MEDICAL SCIENCES

TOPIC TAGS--PYRROLES, ORGANIC NITROGEN COMPOUND, PYRIMIDINE, AMINE DERIVATIVE, MOLECULAR STRUCTURE, CHEMICAL SYNTHESIS

CONTROL MARKING--NO RESTRICTIONS

DOCUMENT CLASS--UNCLASSIFIED

PROXY REEL/FRAME--3002/0479 STEP NO--UR/0409/70/000/003/0428/0428

CIRC ACCESSION NO--AP0128048

UNCLASSIFIED

APPROVED FOR RELEASE: 09/17/2001 CIA-RDP86-00513R002203010020-1"

"APPROVED FOR RELEASE: 09/17/2001 CIA-RDP86-00513R002203010020-1

2/2 012 UNCLASSIFIED PROCESSING DATE--13NOV70

CIRC ACCESSION NO--AP0126048

ABSTRACT/EXTRACT--(U) GP-0- ABSTRACT. DERIVS. OF 2 AMINOPYRROLE (I) WERE CONDENSED WITH 1,3,DICARBONYL,ERIVS. IN REFLUXING C SUB5 H SUB5 N OR ACOH OR HEATED WITHOUT SOLVENT AT 150-60DEGREES TO YIELD THE FOLLOWING II (R, R PRIME1, R PRIME2, R PRIME3, M.P., AND PERCENT YIELD GIVEN): SHOWN ON MICROFICHE. FACILITY: VES. NAUCH.-ISSLED. KHIM.-FARM. INST. IM. ORDZHONIKIDZE, MOSCOW, USSR.

UNCLASSIFIED

APPROVED FOR RELEASE: 09/17/2001 CIA-RDP86-00513R002203010020-1"

"APPROVED FOR RELEASE: 09/17/2001 CIA-RDP86-00513R002203010020-1

1/2 010 UNCLASSIFIED PROCESSING DATE--13NOV70

TITLE--INDOLE DERIVATIVES -U-

AUTHOR-(03)-SHVEDOV, V.I., KURILO, G.N., GRINEV, A.N.

COUNTRY OF INFO--USSR

SOURCE--U.S.S.R. 262,906
REFERENCE--OTKRYTIYA, OZOBRET., PROM. OBRAZTSY, TOVARNYE ZNAKI 1970, 47(7)
DATE PUBLISHED--04FEB70

SUBJECT AREAS--CHEMISTRY, BIOLOGICAL AND MEDICAL SCIENCES

TOPIC TAGS--CHEMICAL PATENT, CHEMICAL SYNTHESIS, MOLECULAR STRUCTURE, INDOLE

CONTROL MARKING--NO RESTRICTIONS

DOCUMENT CLASS--UNCLASSIFIED
PROXY REEL/FRAME--3004/1777 STEP NO--UR/0482/70/000/000/0000/0000

CIRC ACCESSION NO--AA0132043
UNCLASSIFIED

APPROVED FOR RELEASE: 09/17/2001 CIA-RDP86-00513R002203010020-1"

"APPROVED FOR RELEASE: 09/17/2001 CIA-RDP86-00513R002203010020-1

UNCLASSIFIED PROCESSING DATE--13NOV70

2/2 010

CIRC ACCESSION NO--AA0132043

ABSTRACT/EXTRACT--(U) GP-0- ABSTRACT. INDOLE DERIVS. (I, R EQUALS H, ALKYL, ARYL; R PRIME1 EQUALS ALKYL, H; R PRIME2 EQUALS H, ALKYL) WERE OBTAINED BY TREATING P BENZOQUINONE WITH GAMMA PHENYL BETA AMINO CROTONIC ACID ESTER OR A DERIV. IN AN INERT SOLVENT, SUCH AS DICHLOROETHANE. THE RESULTING PRODUCT WAS SEPO. OR METHYLATED BY ME SUB2 SO SUB4. FACILITY: OROZHONIKIDZE, S., ALL UNION SCIENTIFIC RESEARCH CHEMICAL PHARMACEUTICAL INSTITUTE.

UNCLASSIFIED

APPROVED FOR RELEASE: 09/17/2001 CIA-RDP86-00513R002203010020-1"

"APPROVED FOR RELEASE: 09/17/2001 CIA-RDP86-00513R002203010020-1

1/2 022 UNCLASSIFIED PROCESSING DATE--09OCT70

TITLE--NEW METHOD FOR SYNTHESIZING THIENO(3,2,B)PYRROLE DERIVATIVES -U-

AUTHOR-(03)-SHVEDOV, V.I., GRINEV, A.N., VASILYEVA, V.K.

COUNTRY OF INFO--USSR

SOURCE--KHIM. GETEROTSIKL. SOEDIN. 1970, (2), 276-7

DATE PUBLISHED--------70

SUBJECT AREAS--CHEMISTRY, BIOLOGICAL AND MEDICAL SCIENCES

TOPIC TAGS--CHEMICAL SYNTHESIS, BIOMEDICAL R AND D, PYRROLES, THIOPHENE, MOLECULAR STRUCTURE, UV SPECTRUM, IR SPECTRUM, EPR SPECTRUM

CONTROL MARKING--NO RESTRICTIONS

DOCUMENT CLASS--UNCLASSIFIED

PROXY REEL/FRAME--1983/1194 STEP NO--UR/0409/70/000/002/0276/0277

CIRC ACCESSION NO--AP0054093

UNCLASSIFIED

APPROVED FOR RELEASE: 09/17/2001 CIA-RDP86-00513R002203010020-1"

"APPROVED FOR RELEASE: 09/17/2001 CIA-RDP86-00513R002203010020-1

2/2 022 UNCLASSIFIED PROCESSING DATE--09OCT70

CIRC ACCESSION NO--AP0054093

ABSTRACT/EXTRACT--(U) GP-0- ABSTRACT. IN A SEARCH FOR NEW BIOL. ACTIVE SUBSTANCES, THE TITLE COMPDS. WERE PREPD. BY HEATING E.G. A,ANILINOACETOPHENONE WITH 3,AMINO,4,(CARBETHOXY),5,METHYLTHIOPHENE TO 140-60DEGREES FOR 10 MIN. ESTERS OF THIENO(3,2,B)PYRROLE,3,CARBOXYLIC ACID (I) ARE FORMED IN 54-7PERCENT YILEDS. THE STRUCTURE OF THE PREPD. SUBSTANCES WAS CHECKED BY UV., IR., AND EPR SPECTROSCOPY. THUS WERE PREPD. I (R, R PRIME2, R PRIME2, AND DECOMPN. TEMP. GIVEN): ET, PH, ME, 81-2DEGREES; H, PH, ME, 256-8DEGREES; H, PH, H, 270-3DEGREES; H, RHO,MEC SUB6 H SUB4, H, 250-2DEGREES; H, RHO,CLC SUB6 H SUB4, 270-1DEGREES.

UNCLASSIFIED

APPROVED FOR RELEASE: 09/17/2001 CIA-RDP86-00513R002203010020-1"

"APPROVED FOR RELEASE: 09/17/2001 CIA-RDP86-00513R002203010020-1

S

UDC 615.31:547.759.327.012.1:542.9

USSR

SHVEDOV, V. I., KURILO, G. N., GRINEV, A. N., All-Union Scientific Research Chemico Pharmaceutical Institute imeni Sergo Ordzhonikidze, Moscow, Ministry of Health USSR

"Synthesis of 2-Arylindole Derivatives"

Moscow, Khimiko-Farmatsevticheskiy Zhurnal, Vol IV, No 3, 70, pp 11-15

Abstract: Use was made of the intramolecular cyclization of 2-arylindolyl-3-acetic acids to synthesize 1,2-benzcarbazole derivatives. Introduction of an aryl chromophore into the indole heterocycle increases the absorption intensity and moves the absorption bands toward the long-wave spectral region. The type of substitutent in the aryl chromophore has no effect on the position of the absorption maxima. Only two of the eighteen derivatives exhibited antiviral activity in vitro against A type PR-8 strain.

1/1

APPROVED FOR RELEASE: 09/17/2001 CIA-RDP86-00513R002203010020-1"

"APPROVED FOR RELEASE: 09/17/2001 CIA-RDP86-00513R002203010020-1

UDC: 547.757.07

USSR

SHVEDOV, V. I., KURILO, G. N., GRINEV, A. N., All-Union Scientific Research Chemico Pharmaceutical Institute imeni Sergo Ordzhonikidze, Moscow, Ministry of Health USSR

"A Method of Producing Indole Derivatives"

Moscow, Otkrytiya, Izobreteniya, Promyshlennyye Obraztsy, Tovarnyye Znaki, No 7, 4 Feb 70, p 29, patent No 262906, filed 12 Feb 68

Translation: This Author's Certificate introduces a method of producing indole derivatives of the formula

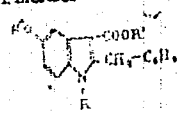

where R is H, Alk, Ar; R' is Alk, H; R" is H, Alk. p-Benzoquinone is interacted with -phenyl- -aminocrotonic acid ester or its derivative in an inert solvent such as dichloroethane, and the resultant product is isolated by conventional methods or methylated by dimethyl sulfate.

1/1

APPROVED FOR RELEASE: 09/17/2001 CIA-RDP86-00513R002203010020-1"

"APPROVED FOR RELEASE: 09/17/2001 CIA-RDP86-00513R002203010020-1

USSR UDC: 547.759.3'861.3:543.422.6:542.941.8

SHVEDOV, V. I., ALTUKHOVA, L. B., and GRINEV, A. N., All-Union Scientific Research Chemico Pharmaceutical Institute imeni Sergo Ordzhonikidze, Moscow, Ministry of Health USSR

"Derivatives of 1,2-Dihydropyrazino[3,2,1-jk]carbazole"

Riga, Khimiya Geterotsiklicheskikh Soyedineniy, No 4, Jul-Aug 69, p 761

Abstract: A series of derivatives of a previously undescribed class of compounds -- 1,2-dihydropyrazine[3,2,1-jk]carbazoles, including the parent compound -- was obtained by the authors by dehydrogenation of 1,10-trimethylenepiperazino[1,2-a]indole on brief heating above 70° with a skeleton nickel catalyst in an inert solvent (benzene, toluene, xylene). The yield is close to quantitative.

1/1

APPROVED FOR RELEASE: 09/17/2001 CIA-RDP86-00513R002203010020-1"

"APPROVED FOR RELEASE: 09/17/2001 CIA-RDP86-00513R002203010020-1

USSR UDC 615.31:[547.861.3+547.751].01].1

SHVEDOV, V. I., ALTUKHOVA, L. B., ANDREYEVA, N. I., MASHKOVSKIY, M. D., and GRINEV, A. N., All-Union Scientific Research Pharmacochemical Institute imeni S. Ordzhonikidze, Moscow

"Pyrazino- and Piperazino[1,2-a]indole Derivatives"

Moscow, Khimiko-Farmatsevticheskiy Zhurnal, Vol 6, No 10, Oct 72, pp 14-17

Abstract: The authors synthesized some new derivatives of pyrazino[1,2-a]indole according to the scheme:

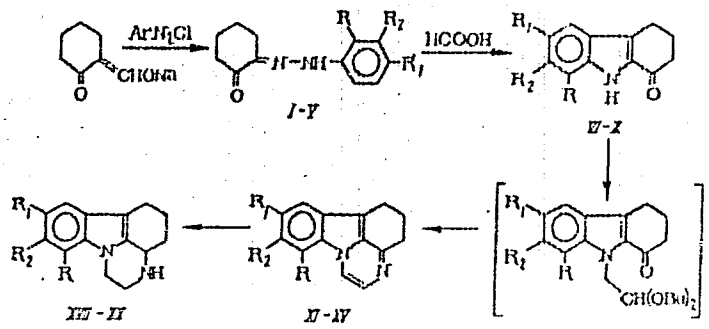

1/2

APPROVED FOR RELEASE: 09/17/2001 CIA-RDP86-00513R002203010020-1"

"APPROVED FOR RELEASE: 09/17/2001 CIA-RDP86-00513R002203010020-1

USSR

SHVEDOV, V. I., et al., Khimiko-Farmatsevticheskiy Zhurnal, Vol 6, No 10, Oct 72, pp 14-17

and analogously from 2,3-dihydro-4-keto-8-methylthiopyrano [3,2-b] indole obtained 2,3-dihydro-10-methylpyrazino 1,2-a thiopyrano [3,2-b] indole, isolated as the hydrochloride. The reduction of XII, XIII, XV with sodium in boiling ethanol gives derivatives if piperazino [1,2-a] indole. It was also found that piperazino [1,2-a] indoles can be obtained by the reduction cyclization of N-acetamide derivatives of 1-keto-1,2,3,4-tetrahydrocarbazole with sodium in boiling ethanol.

Pharmacological investigations showed that derivatives of 1,10-trimethylene-piperazino [1,2-a] indole possess properties characteristic of substances with antidepressive activity (imizin etc.) and compounds with a neuroleptic effect (aminazin etc.). An affinity with antidepressants of the imipramine type is most characteristic of the studied derivatives. The corresponding derivatives of pyrazino [1,2-a] indole have a lower activity than those of piperazino [1,2-a] indole. The studied compounds are of comparatively low toxicity.
2/2

APPROVED FOR RELEASE: 09/17/2001 CIA-RDP86-00513R002203010020-1"

"APPROVED FOR RELEASE: 09/17/2001 CIA-RDP86-00513R002203010020-1

UDC 628.34:546.79

USSR

SHVEDOV, V. P., and YAKUSHEV, M. F.,

"The use of Electrophoresis, Electrocoagulation, and Electroflotation in Purifying Radioactive Water"

Leningrad, Radiokhimiya, Vol 12, No 6, 1970, pp 871-876

Abstract: Purification processes were studied to remove strontium-90 and cesium-137 from water by electrocoagulation and electroflotation, using electrodes made of titanium, carbon steel, and stainless steel X18N10T. Maximum total removal of strontium-90 was achieved at pH > 10. The purification coefficient for titanium electrodes was 50, for the carbon steel about 28, and for stainless steel about 18. Electrocoagulation is ineffective in removal of cesium-137, and strontium-90 may be removed up to 20% at pH 10. Electroflotation removes 60% of the radiocesium and more than 90% of radiostrontium, the maximum for both cases being reached around pH 6. The effect of both the electrocoagulation and electroflotation depends on the current density: less than 0.02 a/cm^2 current gives a very low purification. With current density

1/2

APPROVED FOR RELEASE: 09/17/2001 CIA-RDP86-00513R002203010020-1"

"APPROVED FOR RELEASE: 09/17/2001 CIA-RDP86-00513R002203010020-1

USSR

SHVEDOV, V. P. et al., Radiokhimiya, Vol 12, No 6, 1970, pp 871-876

$\geqslant$ 0.2 a/cm^2 the rate of the formation of gas bubbles should give a complete removal of colloids -- those present in the original solution and those formed by electrocoagulation -- into the foamy product.

2/2

APPROVED FOR RELEASE: 09/17/2001 CIA-RDP86-00513R002203010020-1"

"APPROVED FOR RELEASE: 09/17/2001 CIA-RDP86-00513R002203010020-1

SHVEDOV V. YE.

AA0052677

UR 0482

Soviet Inventions Illustrated, Section III Mechanical and General, Derwent, 1-70

241301 TRENCH FILLER has a working member comprising a frame 1 with closed scraping chain 3 placed in a vertical plane. It is distinguished by mounting, in the horizontal plane additional closed scraping chain 2 to, This achieves preloosening of the soil.

12.2.66. as 1055097/29-16. POLTATEEV, I.S. et al. Kiev Binding Inst. (15.8.69) Bul. 13/1.4.69 Class 84d, Int. Cl. E 02f.

1/3

18

19821444

APPROVED FOR RELEASE: 09/17/2001 CIA-RDP86-00513R002203010020-1"

"APPROVED FOR RELEASE: 09/17/2001 CIA-RDP86-00513R002203010020-1

AA0052677

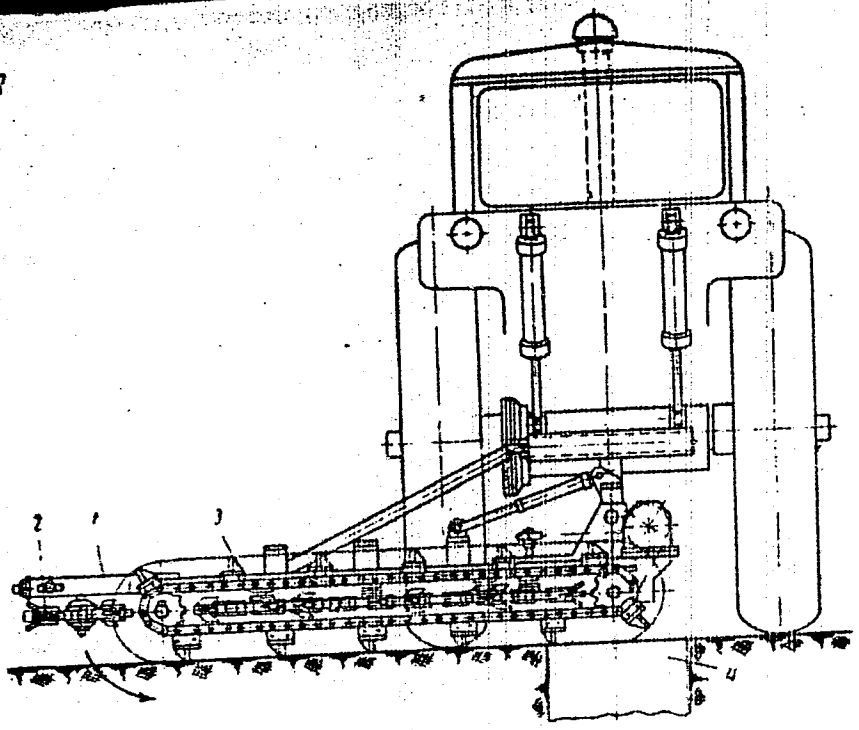

1/3

19821445

APPROVED FOR RELEASE: 09/17/2001 CIA-RDP86-00513R002203010020-1"

"APPROVED FOR RELEASE: 09/17/2001 CIA-RDP86-00513R002203010020-1

AA0052677

Poltavtsev, I. S.; Smryagin, A. G.; Protsenko, V. V.; Shvedov, V. Ye.; Zgurskaya, L. M.; Lekhovich, I. F.; Rutberg, Ye. I.; Borovik, N. A.
Kiyevskiy Filial Tsentral'nogo Nauchno-Issledovatel'skiy Instituta Svyazi

3/3

19821446

APPROVED FOR RELEASE: 09/17/2001 CIA-RDP86-00513R002203010020-1"

"APPROVED FOR RELEASE: 09/17/2001 CIA-RDP86-00513R002203010020-1

USSR UDC: 621.382.3

KAKOVKIN, V. V., ZAYTSEV, B. D., and SHVEDOV, Ye. Ye.

"Measuring Infrared Noise of MOS Transistors by the Frequency Transformation Method"

Kiev, Izvestiya VUZ--Radioelektronika, Vol 14, No 1, 1971, pp 67-71

Abstract: An important characteristic of MOS transistor amplifiers is the inherent noise which limits the sensitivity of the device and, most typical of the noise in the infrared spectrum, causes drift of the zero point. Discussing the various methods of measuring the noise spectral density, the authors conclude that the most promising is the frequency transformation method, which involves the use of a tape recorder. According to this method, the noise voltages are recorded at low speed and are played back at a speed providing the required change in time scale for investigating the noise spectral density with ordinary equipment. This article gives the results of experiments performed in the measurement of infrared noise in the 0.005-1 Hz range, using the MAG-1 and MAG-2 recorders. The recordings were made at speeds of 0.14, 0.07, and 0.035 mm/s, and the playbacks at 381 and 762 mm/s. The distortions in the spectra, computed theoretically for this process, were experimentally checked. For their experimental specimens, the authors used MOS transistors with induced p-channel and an insulating SiO_2 film 0.17 μ thick. Curves are plotted for the noise factor as a function of the frequency.

1/1

APPROVED FOR RELEASE: 09/17/2001 CIA-RDP86-00513R002203010020-1"

"APPROVED FOR RELEASE: 09/17/2001 CIA-RDP86-00513R002203010020-1

USSR

UDC: 621.382.3

DUDNIKOV, V. P., ZAYTSEV, B. D., PEREL'MAN, A. A., and SHVEDOV, Ye. Ye.

"Drift Time of MOS Transistors"

Kiev, Izvestiya VUZ--Radioelektronika, Vol 13, No 11, 1970, pp 1358-1361

Abstract: it is asserted that data regarding the drift time of MOS (metal oxide semiconductor) transistors is rather exiguous although such data is important since the stability requirements of linear circuits involving such components are much stricter than present-day integrated digital circuits. This paper gives the results of measurements made of 40 MOS transistors, with induced p-channel, of either SiO_2 or Si_3N_4 films. Both these films were 0.17 μ thick. The parameter chosen for the drift time criterion was the increase in voltage applied to the gate corresponding to the ratio of the measured increment in the drain current to the transconductance of the transistor under measurement for a given drain current. A block diagram of the measuring equipment is shown. It was found, in the course of the measurements, that the drift time of the MOS with SiO_2 is fully reproduced even after the gate is deprived of its voltage. The results of an experiment performed on the basis of that fact indicated that the drift of the MOS transistor is basically caused by the migration of ions and the charge of the surface states.

1/1

APPROVED FOR RELEASE: 09/17/2001 CIA-RDP86-00513R002203010020-1"

"APPROVED FOR RELEASE: 09/17/2001 CIA-RDP86-00513R002203010020-1

S

UDC 534.322.3.083

USSR

ZAYTSEV, B. D., STEPANENKO, I. P., SHVEDOV, YE. YE.

"Methods of Measuring Low-Frequency Noise"

Moscow, Izmeritel'naya Tekhnika, No 6, Jun 1970, pp 43-46

Abstract: This article contains a review of the existing methods and means of measuring low-frequency noise in electronic instruments (the hertz and subhertz ranges). The review is based on an analysis of Soviet and foreign literature. Low-frequency noise and null drift, methods of measuring low-frequency noise, low-frequency noise generators, low-frequency band filters, and low-frequency voltmeters are considered. It is concluded that measuring noise in semiconductor devices in the infrasonic frequency range is of great scientific and practical interest. Various methods and equipment have been developed at this time for measuring the characteristics of noise at frequencies up to $5 \cdot 10^{-5}$ hertz. Measuring low-frequency noise by the method of frequency spectrum conversion (the magnetophonic technique) has not at this time been sufficiently tested. The comparative measurement techniques using analog RC-filters and an indicating voltmeter are most prospective. These methods can be used to measure noise in the frequency range from a few hertz to frequencies on the order of 10^{-5} hertz. Descriptive diagrams, graphs and mathematical descriptions are used to illustrate and explain the various techniques and equipment.

1/1

APPROVED FOR RELEASE: 09/17/2001 CIA-RDP86-00513R002203010020-1"

"APPROVED FOR RELEASE: 09/17/2001 CIA-RDP86-00513R002203010020-1

UDC 681.2:621.391.822.029.33

USSR

ZAYTSEV, B. D., SHVEDOV, YE. YE.

"A Device for Measuring Very Low Frequency Noises"

Moscow, Izmeritel'naya Tekhnika, No 8, Aug 70, pp 74-76

Abstract: The authors describe an instrument which they have developed for measuring the spectral density of noises in the 0.1-100 Hz frequency range by comparing the noises with those from a standard low frequency noise source. The standard industrial U4-1 wide-band amplifier was used with variable gain from 0 to 5 X 10^4. An 15-M oscillograph was used as the recording instrument. The circuitry of the master low frequency noise generator, narrow-band tunable filter and computer voltmeter used in the instrument is described. The instrument was used to measure the noise factor of MDS transistors with induced P-channel. The effective passband of the filter varies over a range of 10-100 percent of the resonance frequency. The sensitivity of the installation was determined by the sensitivity of the wide-band amplifier which was used, and in these experiments was 0.1 $\mu V^2/Hz$. The measurement error determined by the error of each of the modules in the device is no more than 15 percent.

1/1

APPROVED FOR RELEASE: 09/17/2001 CIA-RDP86-00513R002203010020-1"

"APPROVED FOR RELEASE: 09/17/2001 CIA-RDP86-00513R002203010020-1

1/2 014 UNCLASSIFIED PROCESSING DATE--23OCT70

TITLE--NQR NUCLEAR QUADRUPOLE RESONANCE SPECTRA OF ARSENIC 75 AND CHLORINE 35 OF CHLORINE CONTAINING ORGANOARSENIC III COMPOUNDS -U-

AUTHOR-(05)-SHVEDOVA, G.N., SVERGUN, V.I., BABUSHKINA, T.A., KUDRYAVTSEVA, L.V., SEMIN, G.K.

COUNTRY OF INFO--USSR

SOURCE--IZV. AKAD. NAUK SSSR, SER. KHIM. 1970, (2), 482-3

DATE PUBLISHED--------70

SUBJECT AREAS--CHEMISTRY, PHYSICS, NUCLEAR SCIENCE AND TECHNOLOGY

TOPIC TAGS--NUCLEAR RESONANCE, SPECTRUM, ARSENIC ISOTOPE, CHLORINE ISOTOPE, ORGANIC ARSENIC COMPOUND, MOLECULAR ORBITAL

CONTROL MARKING--NO RESTRICTIONS

DOCUMENT CLASS--UNCLASSIFIED

PROXY REEL/FRAME--1997/0643 STEP NO--UR/0062/70/000/002/0482/0483

CIRC ACCESSION NO--AP0119560

UNCLASSIFIED

APPROVED FOR RELEASE: 09/17/2001 CIA-RDP86-00513R002203010020-1"

"APPROVED FOR RELEASE: 09/17/2001 CIA-RDP86-00513R002203010020-1

2/2 014 UNCLASSIFIED PROCESSING DATE--23OCT70

CIRC ACCESSION NO--AP0119560

ABSTRACT/EXTRACT--(U) GP-0- ABSTRACT. NQR SPECTRA WERE REPORTED FOR PRIME75 AS AND PRIME35 CL IN ASCL SUB3, ME SUB3 AS, ET SUB3 AS, PH SUB3 AS, PH SUB2 ASC SUB6 H SUB4 CO SUB2 H P AND M ISOMER, PH SUB2 ASCL, MEASCL SUB2, ETASCL SUB2, PRASCL SUB2, AND BUASCL SUB2. THE P CHARACTER OF THE SP HYBRIDIZED UNSHARED ELECTRONS OF AS INCREASES UNDER THE INFLUENCE OF DIVERSE SUBSTITUENTS ON AS; THIS CORRESPONDS TO INCREASED ANGLE BETWEEN METAL ORBITALS RELATIVE TO THE VALENCE ANGLE AND DEVIATION OF THE ORBITAL OCCUPIED BY THE LONE PAIR FROM THE PSEUDOAXIS OF THE 3RD ORDER. FACILITY: INST. ELEMENTOORG. SOEDIN., MOSCOW, USSR.

UNCLASSIFIED

APPROVED FOR RELEASE: 09/17/2001 CIA-RDP86-00513R002203010020-1"

"APPROVED FOR RELEASE: 09/17/2001 CIA-RDP86-00513R002203010020-1

USSR UDC 538.113 + 543.42 + 547.242 + 546.13

SVERGUN, V. I., BABUSHKINA, T. A., SHVEDOVA, G. N., KUDRYAVTSEVA, L. V., and SEMIN, G. K., Institute of Organoelemental Compounds, Academy of Sciences USSR

"As^{75} and Cl^{35} NQR Spectra of Chlorine-containing Organoelemental Compounds of Trivalent Arsenic"

Moscow, Izvestiya Akademii Nauk SSSR, Seriya Khimicheskaya, No 2, Feb 70, pp 482-483

Abstract: The As^{75} and Cl^{35} NQR spectra for compounds of the type R_xAsR_{3-x} were studied. It was found that sharply different substituents in these compounds produce a significant increase in the angle between the atomic hybridized orbitals of the metal, which increases the p-character of the sp-hybridized pair of the metal, resulting in a sharp increase in the As^{75} NQR frequency. The angle becomes much

1/2

APPROVED FOR RELEASE: 09/17/2001 CIA-RDP86-00513R002203010020-1"

"APPROVED FOR RELEASE: 09/17/2001 CIA-RDP86-00513R002203010020-1

USSR

SVERGUN, V. I., et al., Izvestiya Akademii Nauk SSSR, Seriya Khimicheskaya, No 2, Feb 70, pp 482-483

greater than the valence angle. In addition, deviation of the orbital occupied by the unshared pair from the third-order pseudoaxis also brings about an increase in As^{75} NQR frequencies. The authors thank A. YE. BORISOV for his interest in the work and G. KH. KAMAY for providing samples of Ph_2AsPh*.

2/2

APPROVED FOR RELEASE: 09/17/2001 CIA-RDP86-00513R002203010020-1"

"APPROVED FOR RELEASE: 09/17/2001 CIA-RDP86-00513R002203010020-1

USSR

UDC 543.42

PANICHEV, N. A., PRUDNIKOV, Ye. D., TURKIN, Yu. I., SHVEDOVA, I. V.

"Scintillation Method of Recording in the Atom Absorption Method of Spectral Analysis"

Minsk, Zhurnal Prikladnoy Spektroskopii, Vol XVIII, No 5, 1973, pp 772-776

Abstract: The scintillation method of recording in the atom absorption technique for spectral analysis is based on recording the absorption pulses of the analytical line caused by evaporation in an atomizing source of individual particles the composition of which includes a defined element. In the example of analyzing Zn, Cd, Cu, Pb, He, and Au the possibility of direct analysis of these elements in powdered samples by blowing them into an air-acetylene flame in an oxygen stream with a relative sensitivity of 10^{-5} to 10^{-6}% is demonstrated. A study was made of the effect of the number of particles containing the defined element on the efficiency of the scintillation recording. The method is highly promising for evaluating the form of the concentration distribution of the elements in the sample composition and analysis of an object with a nonuniform concentration (rocks, industrial aerosols). A block diagram of the experimental device and the tabulated experimental data are presented.

1/2

APPROVED FOR RELEASE: 09/17/2001 CIA-RDP86-00513R002203010020-1"

"APPROVED FOR RELEASE: 09/17/2001 CIA-RDP86-00513R002203010020-1

USSR

PANICHEV, N. A., et al., Zhurnal Prikladnoy Spektroskopii, Vol XVIII, No 5, 1973, pp 772-776

A comparison of the detection limits of the scintillation method of recording in the emission and atom absorption methods of analysis performed for Cu and Ag also showed that the latter is more sensitive. The result is explained by the higher level of spectral noise for measuring emission radiation by comparison with the number of nonselective absorption pulses.

2/2

APPROVED FOR RELEASE: 09/17/2001 CIA-RDP86-00513R002203010020-1"

"APPROVED FOR RELEASE: 09/17/2001 CIA-RDP86-00513R002203010020-1

USSR

UDC 546.171.1:536.413.2

TIMOFEYEVA, I. I., and SHVEDOVA, L. K., Institute of Problems of Material Science, Academy of Sciences UkrSSR

"Microhardness and Thermal Expansion of Transition Metal Nitrides in the 80-300°K Temperature Interval"

Moscow, Izvestiya Akademii Nauk SSSR, Neorganicheskiye Materialy, Vol 8, No 6, Jun 72, pp 1169-1170

Abstract: An investigation was made of the microhardness and thermal expansion coefficient of titanium and zirconium nitrides in their homogeneity regions and of hafnium, vanadium, niobium, and tantalum monoitrides. The microhardness of nitrides was measured under a layer of cooling liquid at a 100-g indenter load on the PMTN unit. The thermal expansion coefficient was determined by the x-ray method by measuring the lattice parameter at liquid nitrogen and room temperatures. The character of the thermal expansion coefficient, the modulus of elasticity, and the Debye temperature in the homogeneity range is different for titanium and zirconium nitrides: with decreasing nitrogen content, the thermal expansion coefficient decreases for titanium nitride but increases somewhat for zirconium nitride. The microhardness of metallic compounds is basically determined by bonding forces

1/2

APPROVED FOR RELEASE: 09/17/2001 CIA-RDP86-00513R002203010020-1"

"APPROVED FOR RELEASE: 09/17/2001 CIA-RDP86-00513R002203010020-1

USSR

TIMOFEYEVA, I. I., and SHVEDOVA, L. K., Izvestiya Akademii Nauk SSSR, Neorganicheskiye Materialy, Vol 8, No 6, Jun 72, pp 1169-1170

of metal and nonmetal atoms, whereas the properties related to dynamics of the crystalline lattice are greatly affected by the bond between metal atoms. One illustration, one table, nine bibliographic references.

2/2

APPROVED FOR RELEASE: 09/17/2001 CIA-RDP86-00513R002203010020-1"

"APPROVED FOR RELEASE: 09/17/2001 CIA-RDP86-00513R002203010020-1

USSR

UDC 537.311/312:661.55

SAMSONOV, G. V., and SHVEDOVA, L. K.

"Electro-Physical Properties of Nitrides of Transition Metals"

Kiev, Ukrainskiy Fizicheskiy Zhurnal, Vol 16, No 10, Oct 71, pp 1597-1601

Abstract: Nitrides of transition metals are at present studied intensively because of their valuable intrinsic properties such as electric and thermal conductivities, high melting points transition into super-conductivity, and high rigidity. They are also of interest because their study leads toward further clarification of the nature of chemical bonds and electronic structure of these compounds.

In the present work, nitrides of titanium, zirconium, hafnium, vanadium, niobium, and tantalum were studied for their resistivity as a function of temperature and for their electric resistivity, Hall coefficient, and magnetic susceptibility as a function of concentration. Resistivity and thermal e.m.f. were measured by the compensation method, and all measurements were normalized according to various accepted conventions. Samples, prepared by means of hot pressing, were X-ray tested for homogeneity and purity of crystalline structure.

While in the homogeneous regions all these properties changed smoothly and irregularities with the deviation of the sample material from the

1/2

APPROVED FOR RELEASE: 09/17/2001 CIA-RDP86-00513R002203010020-1"

"APPROVED FOR RELEASE: 09/17/2001 CIA-RDP86-00513R002203010020-1

USSR

SAMSONOV, G. V., and SHVEDOVA, L. K., Ukrainskiy Fizicheskiy Zhurnal, Vol 16, No 10, Oct 71, pp 1597-1601

stoichiometric structure were observed. Thus, resistivity increased because of additional absorption of electrons by the holes in the nitrogen sub-lattice. Resistivity also appeared to be higher for the nitrides of transition metals of Group V of the periodic table as compared to those of Group IV. Thermal e.m.f. was negative for all tested nitrides, with a nearly linear dependence on temperature. Negative e.m.f. and Hall effect were accepted as proof that electric conduction was predominantly electronic. Carrier mobility was computed, and it was higher for nitrides of Group V. It was found that carrier mobility decreased with greater deviation from stoichiometry because of the greater number of holes in the nitrogen sub-lattice.

Dependence of magnetic susceptibility on concentration showed that all nitrides are paramagnetic. It was also observed that susceptibility increased with deviation from stoichiometry. As it is known that the measured susceptibility is the sum of diamagnetic and paramagnetic components, a joint investigation of the electronic specific heat and of the magnetic susceptibility permitted computing by the authors of the fraction of the paramagnetic part in the measured magnetic susceptibility.

2/2

APPROVED FOR RELEASE: 09/17/2001 CIA-RDP86-00513R002203010020-1"

"APPROVED FOR RELEASE: 09/17/2001 CIA-RDP86-00513R002203010020-1

1/2 011 UNCLASSIFIED PROCESSING DATE--09OCT70

TITLE--DETERMINATION OF PALLADIUM BY THE CATALYTIC REACTION BETWEEN STANNOUS CHLORIDE AND ARSENIOUS ACID -U-

AUTHOR-(03)-FEDOROVA, T.I., SHVEDOVA, L.V., YATSIMIRSKIY, K.B.

COUNTRY OF INFO--USSR

SOURCE--ZH. ANAL. KHIM. 1970, 25(2), 307-11

DATE PUBLISHED--------70

SUBJECT AREAS--CHEMISTRY

TOPIC TAGS--PALLADIUM, CHEMICAL REACTION RATE, CHEMICAL ANALYSIS, TIN CHLORIDE, ARSENIC COMPOUND

CONTROL MARKING--NO RESTRICTIONS

DOCUMENT CLASS--UNCLASSIFIED

PROXY REEL/FRAME--1994/1919 STEP NO--UR/0075/70/025/002/0307/0311

CIRC ACCESSION NO--AP0115733

UNCLASSIFIED

APPROVED FOR RELEASE: 09/17/2001 CIA-RDP86-00513R002203010020-1"

"APPROVED FOR RELEASE: 09/17/2001 CIA-RDP86-00513R002203010020-1

2/2 011 UNCLASSIFIED PROCESSING DATE--09OCT70

CIRC ACCESSION NO--AP0115733

ABSTRACT/EXTRACT--(U) GP-0- ABSTRACT. THE REACTION OF SNCL SUB2 WITH HASO SUB2 IN A HCL SOLN. WAS STUDIED. THE REACTION RATE DEPENDS ON THE CONCNS. OF PD(II) USED AS CATALYST, HASO SUB2, SNCL SUB2, AND HCL. OPTIMUM CONDITIONS ARE: 0.09M SNCL SUB2, 0.02M HASO SUB2, 2.0M HCL, 1 TIMES 10 PRIME NEGATIVE5 M PDCL SUB2. DURING 3 MIN THERE IS A LINEAR DEPENDENCE BETWEEN THE ABOSRBANCE AND PD(II) CONCN. AU(III), PT(IV), RH(III), OS(VIII), HG(II) CATALYZE THE REACTION. LARGE AMTS. OF TEO SUB4 PRIME NEGATIVE NEGATIVE AND SRO SUB4 PRIME NEGATIVE NEGATIVE REACTING WITH SN(II), AS WELL AS I PRIME NEGATIVE, PO SUB4.PRIME3 NEGATIVE, HNO SUB3, AND HCLO SUB4 INTERFERE IN THE REACTION; FE(III), CO(II), NI(II), CU(II), ZN(II), MN(II), SB(III), RU(III), IR(V), AG(I), AND SIO SUB3 PRIME2 NEGATIVE DO NOT INTERFERE. THE INDICATOR REACTION CAN BE USED TO DET. SMALL AMTS. OF PD WITH A SENSITIVITY OF 0.2 MUG-ML. PLACE THE SOLN. TO BE ANALYZED INTO A MIXT. CONTG. 4 ML 0.1M HASO SUB2, 3 ML HCL, 4 ML 10PERCENT SNCL SUB2 AND 1 ML 1PERCENT FRESHLY PREPD. GELATIN AND BEGIN TIMING. TRANSFER INTO A DRY CELL AND MEASURE THE ABSORBANCE FOR 3 MIN BY USING A BLUE FILTER. THE AV. ERROR IN PURE PDCL SUB2 SOLNS. IS 2.5PERCENT; IN SOLNS. CONTG. TO FOLD AMTS. OF CU(II) CO(II), NI(II), FE(III), MN(II) AND 10 FOLD RU(III), THE ERROR IS 3.5PERCENT. FACILITY: IVANOV. CHEM. TECHNOL. INST., IVANOVO, USSR.

UNCLASSIFIED

APPROVED FOR RELEASE: 09/17/2001 CIA-RDP86-00513R002203010020-1"

"APPROVED FOR RELEASE: 09/17/2001 CIA-RDP86-00513R002203010020-1

1/2 027 UNCLASSIFIED PROCESSING DATE--30OCT70

TITLE--ENERGY OF THE FIRST STOKES COMPONENTS IN THE STIMULATED RAMAN SPECTRA OF SOME LIQUIDS -U-

AUTHOR-(04)-SHVEDOVA, N.D., GERASIN, A.P., SIVOLOBOV, V.V., SVERDLOV, L.M.

COUNTRY OF INFO--USSR

SOURCE--ZH. PRIKL. SPEKTROSK. 1970, 12(2), 270-3

DATE PUBLISHED--------70

SUBJECT AREAS--CHEMISTRY, PHYSICS

TOPIC TAGS--RAMAN SPECTRUM, PULSE EXCITATION, BENZENE, CYCLOHEXANE, ACETYLENE HYDROCARBON, EXCITATION ENERGY

CONTROL MARKING--NO RESTRICTIONS

DOCUMENT CLASS--UNCLASSIFIED

PROXY REEL/FRAME--1995/1237 STEP NO--UR/0368/70/012/002/0270/0273

CIRC ACCESSION NO--AP0116699

UNCLASSIFIED

APPROVED FOR RELEASE: 09/17/2001 CIA-RDP86-00513R002203010020-1"

"APPROVED FOR RELEASE: 09/17/2001 CIA-RDP86-00513R002203010020-1

2/2 027 UNCLASSIFIED PROCESSING DATE--30OCT70

CIRC ACCESSION NO--AP0116699

ABSTRACT/EXTRACT--(U) GP-0- ABSTRACT. THE EFFECTS OF THE ENERGY OF THE EXCITING PULSE AND CELL WIDTH ON THE ENERGY OF THE FIRST STOKES COMPONENTS OF THE STIMULATED RAMAN SPECTRA OF BENZENE (I) (992CM PRIME NEGATIVE1), CYCLOHEXANE (II) (2846 CM PRIME NEGATIVE1), AND PHENYLACETYLENE (III) (1002 AND 2102 CM PRIME NEGATIVE1) WERE EXAMD. THE DATA SHOW THAT, AT LOW VALUES OF THE ENERGY OF EXCITING LIGHT, THE ENERGY OF THE FIRST STOKES COMPONENTS INCREASES MONOTONICALLY. THE RAMAN SPECTRA THRESHOLD DETD. FROM EXPTL. DATA WAS P EQUALS 1.5 FOR III AND 2.5 FOR II RELATIVE TO I. AN INCREASE OF CELL WIDTH CAUSED A DECREASE OF THE STIMULATED RAMAN SPECTRA THRESHOLD. THE ENERGY OF THE FIRST STOKES COMPONENTS INCREASED MONOTONICALLY WITH THE ENERGY PULSE INCREASE FOR CELLS OF 10, 20, 40, AND 80 MM WIDTH. FOR CELLS OF 350 MM WIDTH THIS INCREASE CEASED AT HIGHER ENERGIES OF EXCITATION. IN THIS CASE (WITH 350 MM CELL) THE ENERGY OF THE SECOND STOKES COMPONENT INCREASED SIGNIFICANTLY REACHING A HIGHER VALUE THAN FOR THE FIRST ONE.

UNCLASSIFIED

APPROVED FOR RELEASE: 09/17/2001 CIA-RDP86-00513R002203010020-1"

"APPROVED FOR RELEASE: 09/17/2001 CIA-RDP86-00513R002203010020-1

UNCLASSIFIED

SECTION V

SO: SELECTED AEROSPACE MEDICAL FACILITIES
PCS-89
SEPT 71

Name: Institute of Photosynthesis, Pushchino

Description:

(U) During this quarterly reporting period, four new articles were located from the Institute of Photosynthesis at Pushchino. On the basis of these articles, it was possible to identify five new personalities with the institute. These personalities, the subjects of the articles, and the dates are given below:

All- biology/photosynthesis

Ginz, V. K.	effect of illumination	1970 (61)
Kuznetsov, V. P.	phosphorylation	1970 (62)
Lebedeva, A. I.	phosphorylation	1970 (62)
Polevaya, V. S.	plant pigment	1970 (63)
Shvedova, T. A.	chlorophyll	1971 (64)

SHVEDOVA, T.A.

UNCLASSIFIED

APPROVED FOR RELEASE: 09/17/2001 CIA-RDP86-00513R002203010020-1"

"APPROVED FOR RELEASE: 09/17/2001 CIA-RDP86-00513R002203010020-1

USSR

UDC 541.623:547.241

SHVETS, A. A., OSIPOV, O. A., and MOISEYEVA, O. A.

"Keto-Enol Tautomerism of Certain Substituted ω-(dipheny;phosphinyl)aceto Phenones"

Leningrad, Zhurnal Obshchey Khimii, Vol XLIII (CV), No 1, 1973, pp 59-61

Abstract: Some results are presented from studying the keto-enol equilibrium of diphenylphosphinylaceto phenones containing different substitutions in the phenyl ring on the carbonyl group. The investigated β-ketooxides of the phosphines were obtained with a 60-80% yield by the effect of the ethyl ester of diphenyl phosphonous acid on the solution of substituted ω-brom-acetophones in toluene at 110-120° by a procedure similar to the one used by T. Ya. Medved', et al. [Izv. AN SSSR, ser. khim., No 1707, 1965]. The substituted diphenyl phosphinyl acetophenones were obtained by Arbuzov regrouping [B. A. Arbuzov, et al., Izv. AN SSSR, ser. khim. 669, 1965]. By bromometric titration in methanol, the content of the enol form in the compounds was found. The logarithm of the keto-enol equilibrium constant is related linearly to the Hammett constants of the substitutions.

1/1

APPROVED FOR RELEASE: 09/17/2001 CIA-RDP86-00513R002203010020-1"

"APPROVED FOR RELEASE: 09/17/2001 CIA-RDP86-00513R002203010020-1

USSR

UDC 541.651:661.718.1

SHVETS, A. A., OSIPOV, O. A., AMARSHIY, E. G., and MOISEYEVA, O. A., Rostov-on-the-Don State University

"Study of the Oxides of Aromatic Phosphines and Their Complexes by Infrared Spectroscopy"

Leningrad, Zhurnal Obshchey Khimii, Vol 42 (104), Vyp 4, 1972, pp 829-833

Abstract: The relationship between the electro-orientation parameters σ_f and the phosphoryl vibration energy and that between the P=O and extraction capacity for substituted triphenylphosphine oxides and their complexes with $ZnCl_2$ and $SnCl_4$ were studied using the IR spectra of the various species. The complexes have a general form of $ZnCl_2 \cdot 2(XC_6H_4)_3PO$. The frequency of the P=O (in cm^{-1}) increases in the order p-$(CH_3)_2N$, p-CH_3O, p-CH_3, H, p-Br, m-Br, and m-NO_2 for the free ligand. The order remains the same for the complexes but is shifted to a lower value for the $ZnCl_2$ complexes and to a still lower wave number for $SnCl_4$ complexes. In both the triphenylphosphine oxides and their complexes there was evidence of a direct polar bond between the substituents and the phosphoryl group. This increased in going from the free ligand to the complex. The electronic effect generated by the phosphorus atom is about three times less than by the carbon atom in the caronyl group of acetophenone.

1/1

APPROVED FOR RELEASE: 09/17/2001 CIA-RDP86-00513R002203010020-1"

"APPROVED FOR RELEASE: 09/17/2001 CIA-RDP86-00513R002203010020-1

1/2 022 UNCLASSIFIED PROCESSING DATE--02OCT70

TITLE--IMPROVEMENT IN THE CHARACTERISTICS OF HYDROGEN CONDENSATION PUMPS -U-

AUTHOR-(02)-SHVETS, A.D., SHESEVSKIY, B.A.

S

COUNTRY OF INFO--USSR

SOURCE--ZH. TEKH. FIZ. 1970, 40(3), 587-91

DATE PUBLISHED--------70

SUBJECT AREAS--MECH., IND., CIVIL AND MARINE ENGR, PHYSICS

TOPIC TAGS--HIGH VACUUM PUMP, CRYOGENIC LIQUID COOLING, GAS LIQUIFACTION, LIQUID HYDROGEN, SLUSH HYDROGEN

CONTROL MARKING--NO RESTRICTIONS

DOCUMENT CLASS--UNCLASSIFIED

PROXY REEL/FRAME--1989/1928 STEP NO--UR/0057/70/040/003/0587/0591

CIRC ACCESSION NO--AP0108257

UNCLASSIFIED

APPROVED FOR RELEASE: 09/17/2001 CIA-RDP86-00513R002203010020-1"

"APPROVED FOR RELEASE: 09/17/2001 CIA-RDP86-00513R002203010020-1

2/2 022 UNCLASSIFIED PROCESSING DATE--02OCT70

CIRC ACCESSION NO--AP0108257

ABSTRACT/EXTRACT--(U) GP-0- ABSTRACT. A DISCUSSION IS GIVEN ON THE OBTAINING OF ULTRAHIGH VACUUMS BY USING H CONDENSATION PUMPS. THE CHARACTERISTICS OF H IN DIFFERENT STATES ARE CONSIDERED. THE USE OF A H SLUSH RATHER THAN LIQ. H, WHICH BOILS AT ATM. PRESSURE, HAS A NO. OF ADVANTAGES. THE TEMP. OF THE PUMP SURFACE IS DECREASED RESULTING IN THE ACHIEVEMENT OF A LIMITING VACUUM OF 2.5 TIMES 10 PRIME NEGATIVE19 MM HG WITH RESPECT TO N. FOR THE SAME THERMAL LOAD, THE OPERATIVE LIFE OF THE PUMP IS PROLONGED. ALSO, LESS OF THE COOLING AGENT IS LOST IN FILLING THE VOL. OF THE PUMP WITH THE H SLUSH.

UNCLASSIFIED

APPROVED FOR RELEASE: 09/17/2001 CIA-RDP86-00513R002203010020-1"

"APPROVED FOR RELEASE: 09/17/2001 CIA-RDP86-00513R002203010020-1

USSR

UDC: 534.2

LYUTYY, V. A., NOVIKOV, L. V., SHVETS, A. I., Moscow

"Pulsations of Pressure in Ring Nozzles"

Moscow, Mekhanika Zhidkosti i Gaza, No 5, Sep-Oct 73, pp 126-132

Abstract: Results are presented from studies of the pulsations of bottom pressure on the end of a ring nozzle, related to the acoustical radiation of the supersonic streams. Pressure pulsations were studied using nozzles flat in the radial cross section with diameter of outer portion of section 110 mm, of inner portion -- 88 mm. An inductive pressure sensor was placed at the center of the end portion. Membrane-type inductive differential convertors were used in an arrangement with counter pressure. The signal was recorded on a 5-channel magnetic recording apparatus with preliminary amplification by a station with a carrier frequency of 36 KHz. The convertors and amplifier-recorder section were calibrated using a resonant-type pulsator, as well as a microphone, amplifier and magnetic recorder manufactured by Bruel and Kjer. The results of calibration indicate that the mean-square error in measurement of pulsation amplitude should not be over ±3 db, of frequency ±3%. The studies of the low-frequency approximation of the dispersion equation for a two-layer cylindrical stream showed

1/2

APPROVED FOR RELEASE: 09/17/2001 CIA-RDP86-00513R002203010020-1"

"APPROVED FOR RELEASE: 09/17/2001 CIA-RDP86-00513R002203010020-1

USSR

LYUTYY, V. A., NOVIKOV, L. V., SHVETS, A. I., Moscow, Mekhanika Zhidkosti i Gaza, No 5, Sep-Oct 73, pp 126-132

that the ring stream tends to oscillate as a unit whole. It is known that the oscillations of flat streams are axisymmetrical, of circular streams -- primarily bending, but there are flow loads when the oscillations are symmetrical. In the open-bottom area mode, feedback apparently arises due to radiation of waves by several periodic cells in the stream. In the critical mode there is only one cell. In this case, the resonant process does not occur.

2/2

APPROVED FOR RELEASE: 09/17/2001 CIA-RDP86-00513R002203010020-1"

"APPROVED FOR RELEASE: 09/17/2001 CIA-RDP86-00513R002203010020-1

USSR

UDC: 533.69.01+533.662.013

GONOR, A. L., KAZAKOV, M. N., and SHVETS, A. I.

"Experimental Investigation of Ultrasonic Flow Around V-Shaped Wings"

Nauchn. tr. In-t mekh. Mosk. un-ta (Scientific Transactions of the Moscow University Institute of Mechanics) 1970, No. 1, pp 58-70 (from RZh-Mekhanika, No. 2, Feb 71, Abstract No. 2B339)

Translation: Results of the experimental investigations of ultrasonic (M = 4.0) flow around triangular V-shaped wings in a wide range of variation in the geometric parameters of the wing. Wing angles of from 0 to 180° and attack angles of from 0 to 15° were studied. In the experiments, the pressure distribution along the wing surface and its trace (along the axis of symmetry) the positions of the condensation jumps, and the aerodynamic quality of the wing were studied, the last with weight measurements. Changes in the nature of the flow observed with changes of angle were analyzed. An increase in the aerodynamic quality was noticed with reduction in the wing angle, the result of a drop in the coefficient of frontal resistance. B. I. Bakum

1/1

APPROVED FOR RELEASE: 09/17/2001 CIA-RDP86-00513R002203010020-1"

"APPROVED FOR RELEASE: 09/17/2001 CIA-RDP86-00513R002203010020-1

USSR

GONOR, A. L., KAZAKOV, M. N., SHVETS, A. I., SHEIN, V. I., Moscow

"Aerodynamic Characteristics of Star-Shaped Bodies at Supersonic Velocities"

Moscow, Izvestiya Akademii Nauk SSSR, Mekhanika Zhidkosti i Gaza, No 1, January-February 1971, pp 97-102

Abstract: Some results of an experimental analysis of the aggregate aerodynamic characteristics of star-shaped bodies at supersonic velocities and a study of the flow pattern in the wake behind a star-shaped body in a broad range of Mach numbers from 2.5 to 8.0 and with variation of the angle of attack from 0 to $\pm 8°$ are presented. The aerodynamic characteristics of two models of star-shaped bodies with from 4 to 6 points were obtained during the study. A comparison was made with the characteristics of the equivalent cone and the characteristics of a "star" with 10 points. A calculation of the drag and position of the compression shocks was made for comparison with the experimental data.

An optical study of the streamlining spectrum is presented with Schlieren photographs and graphs showing the geometry of the Mach configuration as a

1/2

APPROVED FOR RELEASE: 09/17/2001 CIA-RDP86-00513R002203010020-1"

"APPROVED FOR RELEASE: 09/17/2001 CIA-RDP86-00513R002203010020-1

USSR

GONOR, A. L., et al., Izvestiya Akademii Nauk SSSR, Mekhanika Zhidkosti i Gaza, No 1, January-February 1971, pp 97-102

function of the angle θ characterizing the position of the mean shock in the plane of the bottom cut. By plotting calculated values of the angle θ calculated on the assumption that the shocks are plane and intersect regularly on the same graph it is clear that in the majority of experiments there was interaction of the shocks of the Mach type. The total drag of a star-shaped body at hypersonic velocities was determined by the Newton scheme.

2/2

APPROVED FOR RELEASE: 09/17/2001 CIA-RDP86-00513R002203010020-1"

"APPROVED FOR RELEASE: 09/17/2001 CIA-RDP86-00513R002203010020-1

USSR

UDC 629.78.018.1

GONOR, A. L., KAZAKHOV, M. N., and SHVETS, A. I.

"Investigation of Supersonic Flow Past V-shaped Wings"

Nauchn. tr. In-t Mekh. Mosk. un-ta (Scientific Transactions of the Institute of Mechanics, Moscow University), 1970, No 1, pp 58-70 (from Referativnyy Zhurnal-Raketostroyeniye, No 12, Dec 70, Abstract No 12.41.164, Resume)

Translation: Flow past V-shaped wings was investigated over a broad range of geometrical parameters. Possible patterns of flow past wings are analyzed based on the results obtained, and pressure distribution at the wing surface and the location of shock waves are determined. The thrust-to-weight ratios are found as a function of angle of V-shaped wing opening by using weighted measurements. Illustrations: 11. Bibliography: 22 entries.

1/1

APPROVED FOR RELEASE: 09/17/2001 CIA-RDP86-00513R002203010020-1"

"APPROVED FOR RELEASE: 09/17/2001 CIA-RDP86-00513R002203010020-1

1/2 033 UNCLASSIFIED

TITLE--FLOW PAST AN OBLATE ELLIPSOID OF REVOLUTION INCIDENT ON THE MAJOR AXIS -U-

PROCESSING DATE--27NOV70

AUTHOR--SHVETS, A.I.

COUNTRY OF INFO--USSR

SOURCE--AKADEMIIA NAUK SSSR, IZVESTIIA, MEKHANIKA ZHIDKOSTI I GAZA, MAR.-APR. 1970, P. 173-177

DATE PUBLISHED--------70

SUBJECT AREAS--AERONAUTICS, METHODS AND EQUIPMENT

TOPIC TAGS--WIND TUNNEL, REYNOLDS NUMBER, GLIDER

CONTROL MARKING--NO RESTRICTIONS

DOCUMENT CLASS--UNCLASSIFIED

PROXY REEL/FRAME--2000/1336

STEP NO--UR/0421/70/000/000/0173/0177

CIRC ACCESSION NO--AP0124986

UNCLASSIFIED

APPROVED FOR RELEASE: 09/17/2001 CIA-RDP86-00513R002203010020-1"

"APPROVED FOR RELEASE: 09/17/2001 CIA-RDP86-00513R002203010020-1

2/2 033 UNCLASSIFIED PROCESSING DATE--27NOV70

CIRC ACCESSION NO--AP0124986

ABSTRACT/EXTRACT--(U) GP-0- ABSTRACT. WIND TUNNEL INVESTIGATION OF MODELS IN THE FORM OF OBLATE ELLIPSOIDS OF REVOLUTION WITH A CONSTANT MAJOR AXIS OF 50 MM AND RATIOS OF THE MINOR TO THE MAJOR SEMIAXIS OF 1.0, 0.66, 0.50, 0.33, AND 0.20. TESTS WERE PERFORMED AT MACH NUMBER OF 2.0, 3.0, AND 3.9, THE ANGLES OF ATTACK BEING VARIED IN THE PLANE NORMAL TO THAT OF THE MAJOR AXIS. THE REYNOLDS NUMBER WAS KEPT AT ROUGHLY 3,000,000. THE PRESSURE DISTRIBUTION AT THE SURFACE OF THE MODELS IS COMPARED WITH NUMERICAL DATA OBTAINED FOR BLUFF BODIES. THE RESULTS ARE USEFUL FOR DESIGNING MINIMUM DRAG REENTRY GLIDERS. FACILITY: MOSKOVSKII GOSUDARSTVENNYI UNIVERSITET, MOSCOW, USSR.

UNCLASSIFIED

APPROVED FOR RELEASE: 09/17/2001 CIA-RDP86-00513R002203010020-1"

"APPROVED FOR RELEASE: 09/17/2001 CIA-RDP86-00513R002203010020-1

SHVETS, L.T.

ECON

ELECTRIC POWER AND RELATED EQUIPMENT

PROSPECTS FOR DEVELOPMENT OF ATOMIC POWER ENGINEERING

[Article by Academician of the Ukrainian Academy of Sciences L. T. Shvets, Doctor of Economic Sciences G. B. Yakusha and Candidate of Technical Sciences Ye. I. Baratov; Kiev, Visnyk Akademii Nauk Ukrains'koy RSR, Ukrainian, No 9, 1971, pp 65-70]

During the Ninth Five-Year Plan, an accelerated rate and increased amount of electric power generation will rank among the most important tasks of the Soviet economy. The directives of the 24th CPSU Congress envisage that between 1971 and 1975 new electric power generating capacity of 65-67 million kilowatts will be put into operation. Electric power will also develop widely in the Ukrainian SSR. By the end of the current five-year plan, electric power output in the republic will rise to 200 billion kilowatt hours, that is, by 45 percent in comparison with the last year's figures.

The electric power base of our country, as the Congress Directives emphasize, will be enlarged chiefly by construction of thermal power plants. At the same time, more than 10 percent of the new capacity will be installed in atomic power plants. In the long run, atomic power will become the basic source of the increase in power generating capacity. All this poses a whole series of theoretical and practical problems which require assiduous investigation. This article is devoted to examining the future prospects of atomic energy in the Ukrainian SSR.

The erection of power plants which would ensure development of the productive forces in any economic region entails considerable expenditures to national economy. In terms of fixed industrial capital the fuel power sectors of the Ukraine require about one-third of the republic's total industrial appropriations and more than 14 percent of its workers. The transportation of fuel accounts for 35 percent of the total freight handling of the republic. Thus, it is not at all surprising that the share of expenditures on thermal and electric power and fuel in the total production costs of the power-intensive industrial

APPROVED FOR RELEASE: 09/17/2001 CIA-RDP86-00513R002203010020-1"

"APPROVED FOR RELEASE: 09/17/2001 CIA-RDP86-00513R002203010020-1

1

USSR

UDC 541.[illegible]/128

MANAKOV, M. N., MAKAROV, M. G., KOVALENKO, L. V., [illegible], Z. I., and SHVETS, N. A., Moscow Chemical-Technological Institute [illegible] D. I. Mendeleyev

"Kinetics of the Reaction of Aromatic Aldehydes With Dialkylphosphinic Acids (Utilization of the Experiment Planning Method)"

Moscow, Zhurnal Fizicheskoy Khimii, Vol 46, No 3, Mar 72, p 804

Abstract: Reaction of dicetylphosphinic acid with benzaldehyde in presence of sodium ethoxide has the following kinetics:

$$W = A_0 \exp(-E/RT)\, c_K^{\alpha} c_d^{\beta} c_b^{\gamma}$$

where c_K^{α}, c_d^{β}, c_b^{γ} are the concentrations of the catalyst, the dicetylphosphinic acid and benzaldehyde respectively. The orthogonal Box [illegible] was used in studying the kinetics of this reaction; the following results were obtained: $\lg A_0 = 5.520 \pm 0.[illegible]$; $\alpha = 0.[illegible] \pm 0.010$; $\beta = 0.[illegible] \pm 0.[illegible]$; $\gamma = 1.[illegible] \pm 0.001$; and $E = 9.66 \pm 0.[illegible]$ kcal/[illegible].

1/1

APPROVED FOR RELEASE: 09/17/2001 CIA-RDP86-00513R002203010020-1"

"APPROVED FOR RELEASE: 09/17/2001 CIA-RDP86-00513R002203010020-1

USSR

UDC: 8.74

KOZHURIN, F. D., ANTONENKO, M. G., SHVETS, N. Ya.

"Organization of a Memory for Access by Distinctive Features"

V sb. Tsifr. vychisl. tekhnika i programmir. (Digital Computer Technology and Programming--collection of works), vyp. 7, Moscow, "Sov. radio", 1972, pp 68-75 (from RZh-Kibernetika, No 8, Aug 72, Abstract No 8V622)

Translation: The article deals with problems of organizing a memory with sequential access for retrieving an object by distinctive features.

The method of "segments" is proposed which enables retrieval in accordance with the most possible group of features. It is shown that the proposed method is quite convenient; an evaluation of this method is given by means of a coefficient of redundancy proposed by the author. It is advisable to use the method of segments in cases where the volume of the stored data on objects appreciably exceeds the volume of distinctive feature information on these objects. Authors' abstract.

1/1

APPROVED FOR RELEASE: 09/17/2001 CIA-RDP86-00513R002203010020-1"

"APPROVED FOR RELEASE: 09/17/2001 CIA-RDP86-00513R002203010020-1

USSR

UDC: 8.74

KOZHURIN, F. D., ANTONENKO, M. G., and SHVETS, N. Ya.

"Organization of Memory for Searching by Signs"

Moscow, V sb. Tsifr. vychisl. tekhnika i programmir. (Digital Computer Techniques and Programming--collection of works) "Sov. Radio," No 7, 1972, pp 68-75 (from RZh--Matematika, No 8, 1972, Abstract No 8V622)

Translation: This article is devoted to problems in the organization of memory with a subsequent beginning in searching for an object from signs.

A method of "segments" is found through which the search can be made from a maximum possible group of signs. It is shown that the proposed method is quite convenient; an evaluation of the method is made through the use of a redundancy factor proposed by the author. The method of segments is advantageously used in cases in which the volume of data regarding the object that can be preserved is much greater than the volume of sign information regarding the object. Authors' abstract.

1/1

APPROVED FOR RELEASE: 09/17/2001 CIA-RDP86-00513R002203010020-1"

"APPROVED FOR RELEASE: 09/17/2001 CIA-RDP86-00513R002203010020-1

USSR UDC 681.3.06:51

ANTONENKO, M. G., KOZHURIN, F. D., SHVETS, N. Ya., ZATINATSKIY, P. A., BALANDINA, Zh. I.

"One Method for Input of Information Files to Data Processing Systems"

Tsifr. Vychisl. Tekhnika i Programmir. [Digital Computer Equipment and Programming -- Collection of Works], No 6, Moscow, Sovetskoye Radio Press, 1971, pp 161-168, (Translated from Referativnyy Zhurnal, Kibernetika, No 6, 1971, Abstract No 6 V603 by the authors).

Translation: Problems are analyzed, related to the organization and input of information files to modern data processing systems. One method of external sorting is presented -- the method of characteristic phrases. Two algorithms are presented, based on the utilization of the ideas of the method of characteristic phrases. Formulas are produced for calculation of the number of runs through a file being sorted. The area of effective utilization of the algorithms is defined.

APPROVED FOR RELEASE: 09/17/2001 CIA-RDP86-00513R002203010020-1"

"APPROVED FOR RELEASE: 09/17/2001 CIA-RDP86-00513R002203010020-1

USSR UDC 533.916

SHVETS, O. M., KURILKO, V. I., TOLOK, V. T.

"Stochastic High-Frequency Ion Heating"

Kiev, Fizika plasmy i problemy upravlyayemogo termoyadernogo sinteza, 1971, Naukova dumka, pp 86-90

Abstract: Although the authors admit the efficiency of obtaining high-energy ions in a dense plasma by heating the latter with a high-frequency field, they find in that method the objection that the energy introduced into the plasma by a monochromatic high-frequency field is in the form of regular collective ion motion in the field of the wave. There is then no relative motion and collision of the ions, and a conversion of this regular collective ion motion into chaotic motion through thermalization of the energy introduced into the plasma becomes necessary. The article lists three fundamental effects leading to the thermalization and indicates how they can be achieved theoretically; they are: paired collisions of particles with various charge-mass ratios; collisionless collective attenuation caused by Cerenkov or Doppler

1/2

APPROVED FOR RELEASE: 09/17/2001 CIA-RDP86-00513R002203010020-1"

"APPROVED FOR RELEASE: 09/17/2001 CIA-RDP86-00513R002203010020-1

USSR

SHVETS, O. M. et al, Fizika plasmy i problemy upravlyayemogo termoyadernogo sinteza 1971, Naukova dumka, pp 86-90

absorption of the wave energy by particles in resonance with the wave; nonlinear effects causing fractionalization of the energy of the original wave. Conditions to be met to obtain these effects are found.

2/2

APPROVED FOR RELEASE: 09/17/2001 CIA-RDP86-00513R002203010020-1"

"APPROVED FOR RELEASE: 09/17/2001 CIA-RDP86-00513R002203010020-1

UDC: 539.377

USSR

PODSTRIGACH, Ya. S., SHVETS, R. N., and PAVLINA, V. S.

"Quasistatic Thermadiffusion Problem for Deformed Solid Bodies"

Kiev, Prikladnaya Mekhanika, Vol 7, No 12, 1971, pp 11-16

Abstract: The basic relations between stresses, deflections, temperatures and concentrations of dissolved substance are given by the equations of state (1.1) to (1.5).

The dynamic effects can be neglected provided the external loads are applied slowly.

Using the entropy rise as an independent variable the equation of state are put in the form (1.7) to (1.11). The boundary conditions are given by equations (1.13) and (1.14).

Equations (2.) to (2.5) apply to a two-dimensional problem.

In the case of a solid cylinder subject to a cyclic axial load the solution is given by equations (3.1) to (3.5).

Graphs of stresses and temperature versus nondimensional frequency of the applied force are shown on Fig. 1 and 2.

1/1

APPROVED FOR RELEASE: 09/17/2001 CIA-RDP86-00513R002203010020-1"

"APPROVED FOR RELEASE: 09/17/2001 CIA-RDP86-00513R002203010020-1

SHVETS, T. A.

SO: JPRS 54435
9 Nov 71

UDC: 612.647'822:612.398.192

CHANGES IN THE GLUTAMIC ACID -- GLUTAMINE -- GAMMA-AMINOBUTYRIC ACID SYSTEM IN THE HUMAN FETAL BRAIN DURING PRENATAL DEVELOPMENT

[Article by T.A. Shvets, K.A. Zaytseva, Donetsk Medical Institute; Moscow, Vestnik Akademii Meditsinskikh Nauk SSSR, Russian, No 9, 1971, pp 88-90]

Glutamic acid (GA) is one of the most intensively oxidized amino acids of brain tissue (Quastel and Wheatley); other amino acids are oxidized very slowly (Edlbacher and Wiss).

At the present time it is recognized that G A participates in removal of ammonia by means of glutamine synthesis (A.Ye. Braunshteyn; D.L. Ferdman; Ye. A. Vladimirova; Archibald; Weil-Malherbe, 1950). Synthesis of the latter is an endergonic process and is catalyzed by the enzyme, glutamine synthetase (S.F. Epshteyn, 1948; Elliott, 1948; Speck, 1949). Glutamine synthesis in the brain has been observed by many researchers (S.F. Epshteyn; D.L. Ferdman and S.F. Epshteyn; Ye.A. Vladimirova; Krebs; Richter and Dawson; Weil-Malherbe, 1936), and it is believed to be the most active process in brain cells (G. Ach et al.).

There is a considerable amount of gamma-aminobutyric acid (GABA) in brain tissues (Awapara et al.; Roberts et al.). It has been shown that GABA is formed from GA through decarboxylation by specific decarboxylase (Roberts and Frankel, 1950, 1951a and b; Wingo and Awapara).

According to the data of these authors, the brain of different animals contains about 150 mg% of glutamic acid, 50-100 mg% glutamine, and about 20-64 mg% GABA. There are not enough data on the levels of these substances in the tissues of the human brain. We only know that in the grey matter of the human brain there is 48 mg% GABA and in the white matter 23.5 mg% (Roberts et al.).

For this reason we investigated the GA, GABA, and glutamine content, as well as glutamine synthetase activity, in the tissues of the human fetal brain throughout the prenatal period.

Material and methods of investigation. Brain tissue from human fetuses, obtained following criminal and artificial abortions, ranging in age from 5 to 40 weeks, served as our material. The organ was rapidly extracted and the blood washed off with cooled saline, and it was examined under refrigeration.

APPROVED FOR RELEASE: 09/17/2001 CIA-RDP86-00513R002203010020-1"

"APPROVED FOR RELEASE: 09/17/2001 CIA-RDP86-00513R002203010020-1

USSR UDC 621.538.669

SHVETS, T. M., IVANOVA, L. YU., MEL'NICHENKO, Z. M., MISHCHENKO, E. G., and NATANSON, E. M., (DECEASED), Institute of Colloidal and Water Chemistry, AN Ukr SSR

"Magnetic Properties of Highly Disperse Iron-Cobalt-Nickel Alloy Powders"

Kiev, Akademiya Nauk Ukr SSR, Poroshkovaya Metallurgiya, No 7, Jun 72, pp 71-75

Abstract: Experimental results of a study of the effect of various electrolysis parameters (electrolyte concentration and acidity, cathode current density, cathode material, and the presence of additives) and of the alloy composition on the magnetic properties of highly disperse ternary iron-cobalt-nickel alloys are presented. The analysis shows that the most significant effect on the magnetic properties is produced by electrolyte concentration. Thus, by increasing concentration from 50 to 500 gr/l (iron, cobalt, and nickel chlorides) the coercive force drops from 800 to 300 oe, and this is related to significant coarsening of alloy particles.

1/1

APPROVED FOR RELEASE: 09/17/2001 CIA-RDP86-00513R002203010020-1"

"APPROVED FOR RELEASE: 09/17/2001 CIA-RDP86-00513R002203010020-1

USSR

UDC 543.251:669.017.1

SHVETS, T. M., MEL'NICHENKO, Z. M., VASILENKO, V. P., IVANOVA, L. YU., and NATANSON, E. M., Institute of Colloidal Chemistry and Water Chemistry, Academy of Sciences Ukrainian SSR

"Effect of Additives on the Electrodeposition of Iron-Cobalt-Nickel Ternary Alloys"

Kiev, Poroshkovaya metallurgiya, No 3, 1972, pp 12-17

Abstract: Cited are the experimental results of a study of the effects of various additives (both inert and surface-active compounds) on the electrodeposition of highly dispersed layers of Fe-Co-Ni alloys, their structure, and the size and shape of the particles formed in the double-layer bath. Measurements of the magnetic properties of the highly dispersed Fe-Co-Ni alloy powders produced in the presence of additives indicate the coercive force to be slightly lower in all cases; the residual inductance increases due to the high dispersity and the marked anisotropy of the shape. The study shows the potential changes in the structure of the deposit as a function of one electrodeposition additive on another. (2 illustrations, 2 tables, 5 bibliographic references)

1/1

APPROVED FOR RELEASE: 09/17/2001 CIA-RDP86-00513R002203010020-1"

"APPROVED FOR RELEASE: 09/17/2001 CIA-RDP86-00513R002203010020-1

Powder Metallurgy

USSR

UDC 621.762.2(088.8)

SHVETS, T. M., VASILENKO, V. P., NATANSON, E. M.

"Method of Production of Metal Powders"

USSR Author's Certificate No. 308094, filed 3/04/69, published 23/08/71. (Translated from Referativnyy Zhurnal Metallurgiya, No 2, 1972, Abstract No. 2G374P).

Translation: A method is suggested for production of metal powders by electrolysis of aqueous solutions of salts using an oscillating cathode. In order to increase the degree of dispersion and homogeneity of the powders of the colloid metals and alloys, the process of electrolysis is performed in a 2-layer bath, consisting of an aqueous solution of the corresponding salts of the metals and an organic fluid, as ultrasonic oscillations are fed to the cathode.

1/1

APPROVED FOR RELEASE: 09/17/2001 CIA-RDP86-00513R002203010020-1"

"APPROVED FOR RELEASE: 09/17/2001 CIA-RDP86-00513R002203010020-1

1/2 047 UNCLASSIFIED PROCESSING DATE--04DEC70

TITLE--ELECTRON MICROSCOPE STUDY OF HIGHLY DISPERSED COBALT -U-

AUTHOR-(04)-SHVETS, T.M., VASILENKO, V.P., ZHELIBO, YE.P., NATANSON, E.M.

COUNTRY OF INFO--USSR

SOURCE--UKRAIN, KHIM, ZHUR., APR. 1970, 36, (4), 335-339

DATE PUBLISHED----APR70

SUBJECT AREAS--MATERIALS, CHEMISTRY

TOPIC TAGS--ELECTRON MICROSCOPY, COBALT ALLOY, METAL POWDER, POWDER METAL, METAL FIBER, ELECTRODEPOSITION, ELECTROLYTE, CHLORIDE

CONTROL MARKING--NO RESTRICTIONS

DOCUMENT CLASS--UNCLASSIFIED

PROXY REEL/FRAME--3008/0343 STEP NO--UR/0073/70/036/004/0335/0339

CIRC ACCESSION NO--AP0137447

UNCLASSIFIED

APPROVED FOR RELEASE: 09/17/2001 CIA-RDP86-00513R002203010020-1"

"APPROVED FOR RELEASE: 09/17/2001 CIA-RDP86-00513R002203010020-1

2/2 047 UNCLASSIFIED PROCESSING DATE--04DEC70

CIRC ACCESSION NO--AP0137447

ABSTRACT/EXTRACT--(U) GP-0- ABSTRACT. THE SHAPE AND SIZE OF HIGHLY DISPERSED CO PARTICLES OBTIANED BY ELECTRODEPOSITION UNDER DIFFERENT CONDITIONS WERE STUDIED IN THE TRANSMISSION ELECTRON MICROSCOPE. CHANGING THE ELECTROLYTE CONCENTRATION FROM 100 TO 400 G-L. COCL SUB2 .6H SUB2 O LED TO A SHARP INCREASE IN PARTICLE SIZE AND A GREATER DEGREE OF DENDRITE FORMATION; RAISING THE CATHODIC C.D. FROM 4 TO 40 A-DM PRIME2 GAVE PARTICLES IN THE FORM OF THE FINE FIBRES. CHANGING THE ELECTROLYTE ACIDITY FROM PH 5 TO PH 1 HAD LITTLE EFFECT ON THE SHAPE OF THE CO PARTICLES.

UNCLASSIFIED

APPROVED FOR RELEASE: 09/17/2001 CIA-RDP86-00513R002203010020-1"

"APPROVED FOR RELEASE: 09/17/2001 CIA-RDP86-00513R002203010020-1

Polymers and Polymerization

USSR

UDC 678.744.422-19:546.98

SHVETS, T. M., MIKHALYUK, S. A., MEL'NICHENKO, Z. M., BOTVINOV, V. A., and ARYUPINA, K. A., Institute of Colloidal Chemistry and Chemistry of Water, Acad. Sc. UkrSSR

"Electroconductivity of Metallopolymers Based on the Alloy Fe-Co-Ni and the Copolymers of Vinyl Chloride With Vinyl Acetate"

Kiyev, Ukrainskii Khimicheskii Zhurnal, Vol 39, No 3, Mar 73, pp 258-261

Abstract: Experimental data have been reported on the value of electroconductivity in relationship to the nature of polymer, composition of metallopolymer, and the temperature of treatment of the metallopolymer obtained by electrolytic method from the alloys consisting of iron-cobalt-nickel and copolymers of vinyl chloride with vinyl acetate. It has been shown that the electroconductivity depends on the composition of the metallopolymers and on the temperature of preliminary treatment.

1/1

APPROVED FOR RELEASE: 09/17/2001 CIA-RDP86-00513R002203010020-1"

"APPROVED FOR RELEASE: 09/17/2001 CIA-RDP86-00513R002203010020-1

1/2 011 UNCLASSIFIED PROCESSING DATE--20NOV70

TITLE--REACTIVITY OF ALCOHOLS WITH WATER DURING ACIDIC CATALYTIC REACTION WITH ETHYLENE OXIDE -U-

AUTHOR-(03)-LEBEDEV, N.N., SAVELYANOV, V.P., SHVETS, V.F.

COUNTRY OF INFO--USSR

SOURCE--TEOR. EKSP. KHIM. 1970, 6(1), 111-16

DATE PUBLISHED--------70

SUBJECT AREAS--CHEMISTRY

TOPIC TAGS--METHANOL, ALCOHOL, ETHYLENE OXIDE, ACID CATALYSIS

CONTROL MARKING--NO RESTRICTIONS

DOCUMENT CLASS--UNCLASSIFIED

PROXY REEL/FRAME--3002/1163 STEP NO--UR/0379/70/006/001/0111/0116

CIRC ACCESSION NO--AP0128585

UNCLASSIFIED

APPROVED FOR RELEASE: 09/17/2001 CIA-RDP86-00513R002203010020-1"

"APPROVED FOR RELEASE: 09/17/2001 CIA-RDP86-00513R002203010020-1

2/2 011

UNCLASSIFIED

CIRC ACCESSION NO--AP0128585 PROCESSING DATE--20NOV70

ABSTRACT/EXTRACT--(U) GP-0- ABSTRACT. BINARY MIXTS. MEOH,ROH AND H SUB2 O,ROH, WHERE R IS ME, ET, PR, AND ISO,PR, WERE TREATED WITH ETHYLENE OXIDE IN 0.01-0.03 M HCLO SUB4 AND THE FOLLOWING RELATIVE REACTIVITIES R SUBMEOH EQUALS K SUBMEOH-K SUBMEOH AND R SUBH SUB2 O EQUALS K SUBH SUB2 O-K SUBROH DETD.: ME, NEGATIVE, 0.70; ET, 1.20, 0.80; PR, 1.40, 0.87; AND ISO,PR, 1.60, 1.10. RELATIVE REACTIVITIES WERE DEPENDENT ON THE ACIDITY CONSTS.: R SUBMEOH EQUALS (K SUBMEOH-K SUBROH) PRIMEO.13 AND R SUBH SUB2 O EQUALS 0.8 (K SUBH SUB2 O-K SUBROH) PRIMEO.13.

FACILITY: MOSK. KHIM. TEKHNOL. INST. IM. MENDELEEVA, MOSCOW, USSR.

UNCLASSIFIED

APPROVED FOR RELEASE: 09/17/2001 CIA-RDP86-00513R002203010020-1"

"APPROVED FOR RELEASE: 09/17/2001 CIA-RDP86-00513R002203010020-1

USSR

UDC 547.426.2

KAPLUN, A. P., KABANOVA, M. A., SHVETS, V. I., and YEVSTIGNEYEVA, R. P.,
Moscow Institute of Fine Chemical Technology imeni M. V. Lomonosov

"Studies in the Area of Complex Lipids. Synthesis of the Phosphatide Acid on the Basis of 1,2-Diglyceride and o-Phenylene Chlorophosphate"

Leningrad, Zhurnal Obshchey Khimii, Vol 43 (105), No 7, Jul 73, pp 1617-1619

Abstract: A synthetic method was developed for the phosphatide acids utilizing phosphorylation of 1,2-diglycerides with o-phenylenechlorophosphate followed by removal of the protective groups. The phosphorylation was carried out at 18-20° using equimolar quantities of 1,2-di-O-palmitoyl-sn-glycerine and o-phenylenechlorophosphate in presence of triethylamine. 1,2-Di-O-palmitoyl-3-O-(o-phenylene)-phosphoryl-sn-glycerine can be hydrolyzed to the ester.

1/1

APPROVED FOR RELEASE: 09/17/2001 CIA-RDP86-00513R002203010020-1"

"APPROVED FOR RELEASE: 09/17/2001 CIA-RDP86-00513R002203010020-1

USSR

UDC 547.426.2

KAPLUN, A. P., KABANOVA, M. A., LYUTIK, A. I., SHVETS, V. I., and YEVSTIGNEYEVA, R. P., Moscow Institute of Fine Chemical Technology Imeni M. V. Lomonosov

"Study in the Area of Complex Lipids. Synthesis of Phospholidylethanolamines Based on 1,2-di-O-Acyl-sn-Glycerines"

Leningrad, Zhurnal Obshchey Khimii, Vol 43 (105), No 8, Aug 73, pp 1839-1844

Abstract: The synthesis of O-(1,2-di-O-palmitoyl-sn-glyceryl-3-O-phosphoryl)-ethanolamine was carried out starting with a 1,2-diglyceride and using 2-phtalimidoethyldichlorophosphate and 2-chloromethyl-4-nitrophenyldichlorophosphate as the phosphorylation agent. An effective method was developed for the formation of phosphodiester structure based on the model of phosphatidylethanolamine obtained from phosphatidylaacids and substituted ethanolamines or from ethanolamine phosphates and 1,2-diglycerides in presence of mesitylenesulfohylchloride.

1/1

APPROVED FOR RELEASE: 09/17/2001 CIA-RDP86-00513R002203010020-1"

"APPROVED FOR RELEASE: 09/17/2001 CIA-RDP86-00513R002203010020-1

USSR

UDC: 573.953+574.917

KLYASHCHITSKIY, B. A., STAROSTINA, A. K., SHVETS, V. I., and YEVSTIGNEYEVA, R. P., Moscow Institute of Fine Chemical Technology imeni M. V. Lomonosov

"Study of the Synthetic Routes of Polyphosphoinositide"

Moscow, Doklady Akademii Nauk SSSR, Vol 195, No 4, Dec 70, pp 848-850

Abstract: Synthesis of polyphosphoinositides -- the most important representatives of inosite phosphatides -- is tied closely to the resolution of optically active di-O-cyclohexylidenemyoinosites into optical antipodes. One such possibility is described for the case of 1,2:5,6-di-O-cyclohexylidenemyoinosite which yielded optically active antipodes through diastereomeric orthoacetates of D-mannose: 1,2:5,6-di-O-cyclohexylidene-sn-myoinosite, $[\alpha]_D^{20}$ -7.4° and its enantiomer 2,3:4,5-di-O-cyclohexylidene-sn-myoinosite, $[\alpha]_D^{20}$ $+7.5^\circ$, both melting at 130-140°C.

1/1

APPROVED FOR RELEASE: 09/17/2001 CIA-RDP86-00513R002203010020-1"

"APPROVED FOR RELEASE: 09/17/2001 CIA-RDP86-00513R002203010020-1

USSR

UDC: 573.953+547.917+547.593.261

KLYASHCHITSKIY, B. A., PIMENOVA, V. V., BASHKATOVA, A. I., ZHELVAKOVA, E. G., SOKOLOV, S. D., SHVETS, V. I., YEVSTIGNEYEVA, R. I., PREOBRAZHENSKIY, N. A., Deceased, Moscow Institute of Fine Chemical Technology imeni M. V. Lomonosov

"Research in the Area of Derivatives of Asymmetrically Substituted Myoinositol. V. Complete Synthesis of sn-Myoinositol 1-Phosphate"

Leningrad, Zhurnal Obshchey Khimii, Vol 40 (102), No 11, Nov 70, pp 2482-2489

Abstract: A new method is used for synthesizing 1,2,4,5,6-penta-O-benzylmyoinositol. The compound is separated into antipodes through diastereomeric orthoesters with D-mannose. Complete synthesis of the 1-phosphate of sn-myoinositol identical to the natural compound is carried out on the basis of 2,3,4-5,6-penta-O-benzyl-sn-myoinositol.

1/1

APPROVED FOR RELEASE: 09/17/2001 CIA-RDP86-00513R002203010020-1"

"APPROVED FOR RELEASE: 09/17/2001 CIA-RDP86-00513R002203010020-1

1/3 009 UNCLASSIFIED PROCESSING DATE--30OCT70

TITLE--ASYMMETRICALLY SUBSTITUTED MYO INOSITOL DERIVATIES. I. SEPARATION OF A RACEMIC MIXTURE OF 1,4,5,6,TETRA,O,BENZYLMYO, INOSITOL. COMPLETE

AUTHOR-(05)-KLYASHCHITSKIY, B.A., STRAKHOVA, G.D., SHVETS, V.I., SOKOLOV, S.D., PREOBRAZHENSKIY, N.A.

COUNTRY OF INFO--USSR

SOURCE--ZH. OBSHCH. KHIM. 1970, 40(1), 236-42

DATE PUBLISHED--------70

SUBJECT AREAS--CHEMISTRY

TOPIC TAGS--CHEMICAL SYNTHESIS, BROMINATED ORGANIC COMPOUND, ESTER, CHEMICAL SEPERATION, CARBOHYDRATE, ISOMER/(U)AMBERLITE IRA400 MATERIAL

CONTROL MARKING--NO RESTRICTIONS

DOCUMENT CLASS--UNCLASSIFIED

PROXY REEL/FRAME--1992/1737 STEP NO--UR/0079/70/040/001/0236/0242

CIRC ACCESSION NO--AP0112726

UNCLASSIFIED

APPROVED FOR RELEASE: 09/17/2001 CIA-RDP86-00513R002203010020-1"

"APPROVED FOR RELEASE: 09/17/2001 CIA-RDP86-00513R002203010020-1

2/3 009

CIRC ACCESSION NO--AP0112726 UNCLASSIFIED PROCESSING DATE--30OCT70

ABSTRACT/EXTRACT--(U) GP-O- ABSTRACT. SYRUPY TETRA-O-ACETYL-BETA-D-MANNOPYRANOSYL BROMIDE (14 G) KEPT WITH 9.1 ML 2,6,LUTIDINE IN ETOH 3 HR GAVE AFTER EVAPN. AND AN AQ. TREATMENT 67.5PERCENT 3,4,6,TRI-O-ACETYL 1,2,O-(ETHYL ORTHOACETYL)-BETA-D-MANNOPYRANOSE, M. 102.5-4DEGREES, (ALPHA) PRIME20 SUBD MINUS 15DEGREES, WHICH (5.95 G) WITH 4.6 G 1,4,5,6,TETRA-O-BENZYLMYO INOSITOL REFLEXED IN (CH SUB2 CL)SUB2 IN THE PRESENCE OF P-MEC SUB4 H SUB4 SO SUB3 H 8.5 HR WITH REMOVAL AND REPLENISHMENT OF THE DRIED SOLVENT, GAVE 18.6PERCENT 3,4,6,TRI-O-ACETYL,1,2,O,(3,4,5,6,TETRA-O-BENZYL-SN MYO-INOSITYL,1,ORTHOACETYL)-BETA-D-MANNOPYRANOSE, M. 155.5-6DEGREES, (ALPHA) PRIME20 SUBD 9.8DEGREES, PPTD. BY ADDN. OF ET SUB2 O; THE FILTRATE PURIFIED ON AL SUB2 O SUB3 GAVE 9.68PERCENT 3,4,6,TRI-O-ACETYL,1,2,O-(1,4,5,6,TETRA-O-BENZYL-SN MYO-INOSIT,3,YL ORTHOACETYL)-BETA-D-MANOPYRANOSE (I), M. 135-7DEGREES, (ALPHA) PRIME20 SUBD 0.54DEGREES. I IN 1 HR AT 20DEGREES WITH 0.1N H SUB2 SO SUB4 IN 90PERCENT AQ. ME SUB2 CO GAVE AFTER PASSAGE OVER AMBERLITE IRA-400 (OH FORM) 81.2PERCENT 1,4,5,6,TETRA-O-BENZYL-SN-MYO-INOSITOL, M. 140.2-2.1DEGREES, (ALPHA) PRIME20 SUBD 25DEGREES. SIMILARLY WAS OBTAINED 86PERCENT 3,4,5,6,TETRA-O-BENZYL-SN-MYO INOSITOL, M. 141-3DEGREES, (ALPHA) PRIME20 SUBD MINUS 24.3DEGREES. THIS HEATED 2 HR AT 100DEGREES WITH MEI AND POWD. KOH UNDER C SUB6 H SUB6 GAVE 25PERCENT L-O-METHYL,3,4,5,6, TETRA-O-BENZYL-SN-MYO-INOSITOL, M. 115-16DEGREES, (ALPHA) PRIME20 SUB3 MINUS 1.5DEGREES, WHILE THE MOTHER LIQUOR GAVE 5.8PERCENT 2,O-METHYL ANALOG, M. 137-8DEGREES, (ALPHA) PRIME20 SUBD

UNCLASSIFIED

APPROVED FOR RELEASE: 09/17/2001 CIA-RDP86-00513R002203010020-1"

"APPROVED FOR RELEASE: 09/17/2001 CIA-RDP86-00513R002203010020-1

3/3 009

UNCLASSIFIED

CIRC ACCESSION NO--AP0112726 PROCESSING DATE--30OCT70

ABSTRACT/EXTRACT--THE L-ISOMER WAS HYDROGENATED OVER PD IN ACOH TO L-O-METHYL-SN-MYO-INOSITOL, M. 204-5.5DEGREES, (ALPHA) PRIME20 SUBD MINUS 33.2DEGREES, INDENTICAL WITH ANTURALLY OCCURING (-).BORNESITOL. THUS AN EFFECTIVE SEPN. OF RACEMIC ASYM. SUBSTITUTED MYO-INOSITOLS WAS PERFORMED VIA DIASTEREOMERIC ORTHO ESTERS WITH D-MANNOSE.

UNCLASSIFIED

APPROVED FOR RELEASE: 09/17/2001 CIA-RDP86-00513R002203010020-1"

"APPROVED FOR RELEASE: 09/17/2001 CIA-RDP86-00513R002203010020-1

1/2 020 UNCLASSIFIED PROCESSING DATE--02OCT70

TITLE--FIRST SYNTHESIS OF NATURAL PHOSPHATIDYL-MYO-INO-SITOL -U-

AUTHOR-(05)-ZHELVAKOVA, E.G., KLYASHCHITSKIY, B.A., SHVETS, V.I., YEVSTIGNEYEVA, R.P., PREOBRAZHENSKIY, N.A.

COUNTRY OF INFO--USSR

SOURCE--ZH. OBSHCH. KHIM. 1970, 40(1) 248

DATE PUBLISHED--------70

S

SUBJECT AREAS--BIOLOGICAL AND MEDICAL SCIENCES

TOPIC TAGS--CHEMICAL SYNTHESIS, GLYCEROL, PHOSPHORUS COMPOUND, SPECTRUM, BIOCHEMISTRY

CONTROL MARKING--NO RESTRICTIONS

DOCUMENT CLASS--UNCLASSIFIED

PROXY REEL/FRAME--1992/1419 STEP NO--UR/0079/70/040/001/0248/0248

CIRC ACCESSION NO--AP0112413

UNCLASSIFIED

APPROVED FOR RELEASE: 09/17/2001 CIA-RDP86-00513R002203010020-1"

"APPROVED FOR RELEASE: 09/17/2001 CIA-RDP86-00513R002203010020-1

2/2 020

CIRC ACCESSION NO--AP0112413 - UNCLASSIFIED

PROCESSING DATE--02OCT70

ABSTRACT/EXTRACT--(U) GP-0- ABSTRACT. REACTION OF 2,3,4,5,6,PENTA,O,BENZYL,SYN,MYO,INOSITOL WITH PHOPOCL SUB2 AND 1,2,DI,PALMITOYL,SN,GLYCEROL IN C SUB5 H SUB5 N GAVE 32PERCENT 1,O,(1,2,DIPALMITOYL,SN,GLYCERYL,(PHENYL,PHOSPHORYL),2,3,4,5, 6,PENTA,O,BENZYL,SN,MYO,INOSITOL, M. 53-4PERCENT. HYDROGENOLYSIS OVER ADAMS PT CATALYST AND PD BLACK GAVE THE PHOSPHORYL ANALOG, ISOLATED AS NH SUB4 SALT, M. 169-72PERCENT. THIS GAVE SPECTRA VERY SIMILAR TO THOSE OF NATURAL MONOPHOSPHOINOSITIEDS.

UNCLASSIFIED

APPROVED FOR RELEASE: 09/17/2001 CIA-RDP86-00513R002203010020-1"

"APPROVED FOR RELEASE: 09/17/2001 CIA-RDP86-00513R002203010020-1

1/2 022 UNCLASSIFIED PROCESSING DATE--18SEP70

TITLE--SYNTHETIC SUBSTITUTES FOR COMPONENTS OF CARDIOLIPIN ANTIGEN -U-

AUTHOR-(02)-REZNIKOVA, L.S., SHVETS, V.I.

S

COUNTRY OF INFO--USSR

SOURCE--VESTNIK DERMATOLOGII I VENEROLOGII, 1970, NR 3, PP 58-62

DATE PUBLISHED--------70

SUBJECT AREAS--BIOLOGICAL AND MEDICAL SCIENCES

TOPIC TAGS--ANTIGEN, DRUG TESTING

CONTROL MARKING--NO RESTRICTIONS

DOCUMENT CLASS--UNCLASSIFIED

PROXY REEL/FRAME--1985/1475 STEP NO--UR/0206/70/000/003/0058/0062

CIRC ACCESSION NO--AP0101561

UNCLASSIFIED

APPROVED FOR RELEASE: 09/17/2001 CIA-RDP86-00513R002203010020-1"

"APPROVED FOR RELEASE: 09/17/2001 CIA-RDP86-00513R002203010020-1

2/2 022 UNCLASSIFIED PROCESSING DATE--18SEP70

CIRC ACCESSION NO--AP0101561

ABSTRACT/EXTRACT--(U) GP-0- ABSTRACT. INVESTIGATION OF SUBSTITUTES OF THE COMPONENTS OF CARDIOLIPIN ANTIGEN (CARDIOLIPIN AND LECITHIN) WAS CARRIED OUT. NINE SUBSTITUTES OF CARDIOLIPIN AND 3 SUBSTITUTES OF LECITHIN WERE PREPARED AND TESTED IN DIFFERENT RATIOS AND COMBINATIONS. THE BEST RESULTS WERE OBTAINED WITH TWO SUBSTITUTES OF CARDIOLIPIN (DIPHOSPHATIDYLGLYCEROL AND BISPHOSPHATID ACID) IN COMBINATION WITH L, ALPHA, DIOLEOIL,LECITHIN SUBSTITUTE OF LECITHIN. TESTING OF THESE ANTIGENS IN THE WASSERMANN TEST WITH 1720 DIFFERENT SERA DEMONSTRATED ALMOST COMPLETE (99.6PERCENT) COINCIDENCE OF THE RESULTS OBTAINED WITH SYNTHETIC SUBSTITUTES AND THE NORMAL CARDIOLIPIN ANTIGEN. SYNTHETIC SUBSTITUTES ARE CHARACTERIZED BY THE PERMANENT COMPOSITION WHICH MAKES THEM SUPERIOR TO NATURAL COMPONENTS THE COMPOSITION OF WHICH MAY CHANGE.

UNCLASSIFIED

APPROVED FOR RELEASE: 09/17/2001 CIA-RDP86-00513R002203010020-1"

"APPROVED FOR RELEASE: 09/17/2001 CIA-RDP86-00513R002203010020-1

1/2 019 UNCLASSIFIED PROCESSING DATE--18SEP70

TITLE--SYNTHESIS OF OPTICALLY ACTIVE PENTABENZYL ETHERS OF MYO INOSITOL. TOTAL SYNTHESIS OF PHOSPHATIDYLINOSITOL WITH NATURAL STRUCTURE -U-

AUTHOR-(05)-KLYASHCHITSKIY, B.A., ZHELVAKOVA, E.G., SHVETS, V.I., EVSTIGNEEVA, R.P., PREOBRAZHENSKIY, N.A.

COUNTRY OF INFO--USSR

SOURCE--TETRAHEDRON LETT. 1970, (8), 587-90

DATE PUBLISHED-------70

SUBJECT AREAS--CHEMISTRY, BIOLOGICAL AND MEDICAL SCIENCES

TOPIC TAGS--OPTIC ACTIVITY, POLYNUCLEAR HYDROCARBON, BENZENE DERIVATIVE, ORGANIC PHOSPHORUS COMPOUND, ETHER, GLYCEROL, FATTY ACID, CHEMCIAL SYNTHESIS

CONTROL MARKING--NO RESTRICTIONS

DOCUMENT CLASS--UNCLASSIFIED

PROXY REEL/FRAME--1985/1509 STEP NO--UR/0000/70/000/008/0587/0590

CIRC ACCESSION NO--AP0101593

UNCLASSIFIED

APPROVED FOR RELEASE: 09/17/2001 CIA-RDP86-00513R002203010020-1"

"APPROVED FOR RELEASE: 09/17/2001 CIA-RDP86-00513R002203010020-1

2/2 019 UNCLASSIFIED PROCESSING DATE--18SEP70

CIRC ACCESSION NO--AP0101593

ABSTRACT/EXTRACT--(U) GP-O- ABSTRACT. IT IS TREATED WITH PHOP(O)CL SUB2 AND 1,2 DIPALMITOYL SN GLYCEROL TO GIVE II. II IS HYDROGENATED OVER ADAMS CATALYST AND PD BLACK TO GIVE 1,0, (MICROFICHE OF ABSTRACT CONTAINS GRAPHIC INFORMATION) (1',2' DIPALMITOYL SN 3' GLYCERYLPHOSPHORYL) SN MYO INOSITOL (III) WHICH HAS A NATURAL STRUCTURE.

UNCLASSIFIED

APPROVED FOR RELEASE: 09/17/2001 CIA-RDP86-00513R002203010020-1"

"APPROVED FOR RELEASE: 09/17/2001 CIA-RDP86-00513R002203010020-1

Acc. Nr. AP0048824 Abstracting Service: CHEMICAL ABST. Ref. Code UR0366

90780t Asymmetrically substituted myo-inositol derivatives. III. Synthesis of 1,2,4,5,6-penta-O-tosyl-myo-inositol. Zhelvakova, E. G.; Shvets, V. I.; Preobrazhenskii, N. A. (Mosk. Inst. Tonkoi Khim. Tekhnol. im. Lomonosova, Moscow, USSR). *Zh. Org. Khim.* 1970, 6(1), 62-5 (Russ). The methylation of 1,4,5,6-tetra-*O*-benzyl-*myo*-inositol with MeI gave 47.4% 2-*O*-methyl-1,4,5,6-tetra-*O*-benzyl-*myo*-inositol (I), 20.9% 3-*O*-methyl-I analog, and 22.3% 2,3-*O*,*O*-dimethyl I analog. The debenzylation of I gave 1-*O*-methyl-*myo*-inositol (II). The esterification of II with HNO_3-H_2SO_4 mixt. gave 3-*O*-methyl-1,2,4,5,6-penta-*O*-nitro-*myo*-inositol (III). All the attempts to

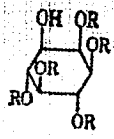

(IV, R = tosyl)

demethylate III failed. The tosylation of II gave the corresponding penta-*O*-tosyl deriv. which was demethylated with BBr_3 in CH_2Cl_2 soln. at −55° to the title compd. (IV). CPJR

1/1

REEL/FRAME
19800587

APPROVED FOR RELEASE: 09/17/2001 CIA-RDP86-00513R002203010020-1"

"APPROVED FOR RELEASE: 09/17/2001 CIA-RDP86-00513R002203010020-1

USSR UDC 612.753+612.419/.014.482

SHVETS, V. N., Laboratory of Immunomorphology, Institute of Epidemiology and Microbiology imeni N. F. Gamaleya, Moscow

"Osteoblastic Reaction of the Bone Marrow of Irradiated Mice and Guinea Pigs"

Moscow, Byulleten' Eksperimental'noy Biologii i Meditsiny, Vol 72, No 11, Nov 71, pp 113-116

Abstract: Mice and guinea pigs were subjected to general irradiation with gamma-rays in a dose of 850-900 R. In both species of animals the number of osteoblasts in the myeloid cavity of the diaphysis of the femoral bone increased by a factor of 2-5 vs. that for controls towards the 10th day after irradiation, and decreased vs. that for controls towards the 20th day. Between the 20th and 30th days the number of osteoblasts reached a level corresponding to that for nonirradiated control animals.

1/1

APPROVED FOR RELEASE: 09/17/2001 CIA-RDP86-00513R002203010020-1"

"APPROVED FOR RELEASE: 09/17/2001 CIA-RDP86-00513R002203010020-1

USSR

UDC: 537.312.62

SALLI, I. V., SHVETS, V. S., DZENZERSKIY, V. A.

"Influence of Superfast Cooling on the Superconductivity of Lead-Bismuth Alloy"

Moscow, Sverkhprovodyashchiye splavy i soyedin.--sbornik (Superconductive Alloys and Compounds--collection of works), "Nauka", 1972, pp 147-150 (from RZh-Radiotekhnika, No 12, Dec 72, abstract No 12D567 [résumé])

Translation: The paper presents experimental data found in studying [the effect of] superfast cooling (10^5-10^6°C/s) on the conductivity of an alloy of lead with additions of bismuth -- 15, 20, 25, 30, 35, 40 and 56.5 at.%. Normally cooled specimens (cooled in air) confirm the data known from the literature on the superconductive critical transition temperature as a function of the bismuth concentration in the alloy. In rapidly cooled alloys, T_c depends on the time of holding the specimens at room temperature between the processes of manufacture and measurement. Two illustrations, bibliography of ten titles.

1/1

APPROVED FOR RELEASE: 09/17/2001 CIA-RDP86-00513R002203010020-1"

"APPROVED FOR RELEASE: 09/17/2001 CIA-RDP86-00513R002203010020-1

USSR UDC 621.374.44

PETUKH, A. M., SHVETSKIY, B. I., L'vov Polytechnic Institute

"Wide Band Frequency Multiplier"

USSR Author's Certificate No 304680, filed 11 December 1969, published 24 May 1971 (from Otkrytiya, Izobreteniya, Promyshlennyye Obraztsy, Tovarnyye Znaki, No 17, 1971, No H 03k 3/72)

Translation: A wide band frequency multiplier executed in the form of a pulse control system and containing a controlled oscillator and frequency divider in the feedback circuit is introduced. It is distinguished by the fact that in order to improve the speed it will contain a phase comparator with three outputs, a direct current integrating amplifier and switches. The output of the amplifier is connected to the input of the controlled oscillator, two outputs of the phase comparator are connected to the controlled inputs of the switches, the outputs of the switches are connected to the amplifier input, and the third output of the comparator is connected to the counter divider reset bus.

1/1

APPROVED FOR RELEASE: 09/17/2001 CIA-RDP86-00513R002203010020-1"

"APPROVED FOR RELEASE: 09/17/2001 CIA-RDP86-00513R002203010020-1

USSR UDC 681.355

SHVETSKIY, B. I., VISHENCHUK, I. M., and KRAVTSOV, R. S., Leningrad, and RYLIK, M. G. and CHEKHOVSKIY, E. M., Lvov Ploytechnical Institute

"A Digital Integrating Voltammeter"

USSR Author's Certificate No 347909 klh 03 K 13/20, filed 9 Aug 68, published 4 Sep 72 (from RZh Avtomatika Telemekhanika i Vychislitel'naya Tekhnika, No 11, Nov 73, abstract No 11 A425P)

Translation: A digital integrating voltammeter is proposed, containing an input apparatus with an amplifier, a source of base voltage, switches, a timer, integrator, zero unit, transfer and discharge instruction shaper, cyclic pulse generator, phase detector, counter, sign-flipflop and frequency divider, transfer apparatus, memory apparatus, binary-decimal code-to-decimal converter and indicator display.

To convert bi-polar voltages and improve noise resistance, the voltammeter contains a zero determination device, the output of which is connected through a switch to the input of an integrator, the output of the zero unit, and one of the inputs of the transferring discharge instruction shaper; the other inputs of the latter are connected to the output of the cyclic impulse generator, the outputs of the sign flipflop, and the output of the frequency dividers, respectively.

1/2

APPROVED FOR RELEASE: 09/17/2001 CIA-RDP86-00513R002203010020-1"

"APPROVED FOR RELEASE: 09/17/2001 CIA-RDP86-00513R002203010020-1

USSR

SHVETSKIY, et al., USSR Author's Certificate No 347909 klh 03 K 13/20, filed 9 Aug 68, published 4 Sep 72

The outputs of the discharge and transfer instruction shaper are connected respectively to the apparatus memory discharge bus and the apparatus transfer bus; the sign flipflop is connected to the output of the high-order position of the counter, and its output is connected to one of the inputs of the phase-sensitive detector and to the control input of the transfer apparatus.

To reduce conversion error, the discharge and transfer instruction shaper contains flipflops, an inverter, and coincidence circuit. One set of flipflop inputs is connected to the output of the frequency divider; the other flipflop inputs (except for the first) are connected to the output of the cyclic pulse generator.

The input of the first flipflop is connected to the output of the zero unit; the direct output of the second and the inverted output of the third flipflop are connected to one coincidence circuit, to which the direct output of the sign flipflop and the output of the cyclic pulse generator are also connected. The direct output of the third and the inverted output of the fourth flipflops are connected to the other coincidence circuit, to which the inverted output of the sign flipflop and the output of the cyclic pulse generator are also connected; the outputs of the coincidence circuits are connected through an inverter to the transfer bus. Three illustrations.

2/2

APPROVED FOR RELEASE: 09/17/2001 CIA-RDP86-00513R002203010020-1"

"APPROVED FOR RELEASE: 09/17/2001 CIA-RDP86-00513R002203010020-1

USSR UDC 681.325.65

DUBITSKIY, L. A., SHVETSKIY, B. I., YUZEVICH, Yu. V.

"Ways to Provide a Wide Dynamic Range in a High-Speed Analog-Digital Converter"

Taganrog, Region. nauch.-tekhn. seminar po stat. analizu modelir. i avtomatiz. kontrolya ob"yektov s konstrukt. slozhn. strukturoy--sbornik (Regional Scientific and Technical Seminar on Statistical Analysis, Modeling and Automated Monitoring of Objects With a Structurally Complex Design--collection of works), vyp. 6, 1972, pp 86-90 (from RZh-Avtomatika, Telemekhanika i Vychislitel'naya Tekhnika, No 11, Nov 72, abstract No 11B310)

Translation: The paper deals with problems of constructing an analog-digital converter providing signal conversion in the 0-100 kHz range, which corresponds to a rate of variation of up to 10^7 V/s in the dynamic range of 80 dB (from 1 mV to 10 V of either polarity) with a conversion time of 5 μs and an error of about 1%. The device consists of an input unit containing a number of scaling amplifiers, a coding converter which includes comparison circuits, a channel-selection logic unit, an analog signal commutator, a high--speed analog-code converter in the pulse-time mode with a narrow dynamic

APPROVED FOR RELEASE: 09/17/2001 CIA-RDP86-00513R002203010020-1"

"APPROVED FOR RELEASE: 09/17/2001 CIA-RDP86-00513R002203010020-1

USSR

DUBITSKIY, L. A. et al., Region. nauch.-tekhn. seminar po stat. analizu, modelir. i avtomatiz. kontrolya ob"yektov s konstrukt. slozhn. strukturoy-- sbornik, vyp. 6, 1972, pp 86-90

range, and a device which determines the sequence of interaction of the units. Two illustrations, bibliography of two titles. L. P.

2/2

APPROVED FOR RELEASE: 09/17/2001 CIA-RDP86-00513R002203010020-1"

"APPROVED FOR RELEASE: 09/17/2001 CIA-RDP86-00513R002203010020-1

USSR UDC: 621.396.69:621.319.4(088.8)

KAZAR'YAN, G. S., YAKIRIN, R. V., SHVETSOV, A. I., Leningrad Production Union "Radiodetal'"

"A Fixed Capacitor of the Mansbridge Type"

USSR Author's Certificate No 266071, filed 17 Feb 66, published 6 Jul 70 (from RZh-Radiotekhnika, No 1, Jan 71, Abstract No 1V301 P)

Translation: This Author's Certificate introduces a capacitor equipped with a rectangular metal housing and insulating packing gaskets located between the inner walls of the housing and the outer surface of the capacitor section. As a distinguishing feature of the patent, the assembly process is simplified by making the insulation gaskets in the form of two hollow sections of a thermoplastic material such as polyethylene with edges which fit into each other and side walls fitted with longitudinally arranged extrusions, the protruding elements of these extrusions being directed partly toward the inside of the hollow section and partly toward the outside.

1/1

APPROVED FOR RELEASE: 09/17/2001 CIA-RDP86-00513R002203010020-1"

"APPROVED FOR RELEASE: 09/17/2001 CIA-RDP86-00513R002203010020-1

USSR UDC 539.3

BAZHENOV, V. G., UGODCHIKOV, A. G., SHVETSOV, A. V.

"A Solution to the Problem of Stress Concentration in a Region Bounded on the Outside by a Circle and from Within by a Curve of Complex Shape Under Force and Temperature Effects"

Sb. nauch. tr. Perm. politekhn. in-t (Collection of Scientific Works of Perm' Polytechnical Institute), 1971, No. 98, pp 3-10 (from RZh-Mekhanika, No 3, Mar 72, Abstract No 3V65)

Translation: A conformal mapping method was used to obtain a solution of the plane statics problem of thermoelasticity and the first boundary value problem of elasticity theory for a symmetric doubly connected region subject to the action of a steady-state temperature drop and uniform pressures from within and without. The solution is constructed in complex form using a Laurent expansion. The problem is reduced to the solution of an infinite system of linear algebraic equations. The reflection of a circular ring on the given region is achieved by power polynomials. It is noted that the best convergence of the solution occurs when the reflecting function is taken in the form of Lagrange interpolation polynomials. A numerical example of the solution of a thermoelasticity problem under isothermal boundary conditions is considered. 10 ref. N. T. Glazunova.

1/1

APPROVED FOR RELEASE: 09/17/2001 CIA-RDP86-00513R002203010020-1"

"APPROVED FOR RELEASE: 09/17/2001 CIA-RDP86-00513R002203010020-1

USSR

UDC:662.215.25

TITOV, V. M., SHVETSOV, G. A., Novosibirsk

"Laboratory Explosive Methods of High-Speed Projection of Solids"

Novosibirsk, Fizika Goreniya i Vzryva, Vol. 6, No. 3, Sep 70, pp. 401-404

Abstract: Formulas are presented to allow the calculation of the minimum explosive charge and proper tube geometry in the design of an explosive device for high-speed projection of solids (spheres) at maximum speed without rupture of the spheres or of the tube from which they are fired.

1/1

APPROVED FOR RELEASE: 09/17/2001 CIA-RDP86-00513R002203010020-1"