"APPROVED FOR RELEASE: 09/17/2001 CIA-RDP86-00513R002203030004-7

USSR

SKRYABIN, K. I., Knizhnoye Obozreniye, 20 Aug 71, p 4

of the more thoroughly studied cetaceans living in our waters but also species living in other regions of the Pacific Ocean. This approach is very valuable because it enables us to become familiar with certain, previously unknown aspects of the biology of these animals. Here are a few examples. Certain features of the color of sperm-whales and other dentate cetaceans confirm the premise that these animals have a family life. A comparative study of the spinal column structure and of the motions performed by various dolphins made it possible to draw the conclusion that there is a direct correlation between the speed of swimming and the number of tail vertebrae. Analysis of the outer integument and receptors has revealed that some dolphins have such a highly developed dermal sensitivity that their skin may actually function as a sound wave receptor. The book offers many such conclusions which are interesting not only to cetacean specialists but also to general biologists and amateur naturalists.

The book has three chapters which are not written by its authors. One chapter deals with the structure of the central nervous system, and it is written by a very prominent specialist in that area, Prof. G. Pillari from the Institute of Brain Study in Switzerland. The second chapter, written

3/4

APPROVED FOR RELEASE: 09/17/2001 CIA-RDP86-00513R002203030004-7"

"APPROVED FOR RELEASE: 09/17/2001 CIA-RDP86-00513R002203030004-7

USSR

SKRYABIN, K. I., Knizhnoye Obozreniye, 20 Aug 71, p 4

by Candidate of Biological Sciences N. L. Krushinskaya, deals with the behavior of cetaceans. This expansion of the authorship was prompted by the justified desire to offer the reader the most qualified and precise information on all aspects of the cetaceans' biology. The third chapter, dealing with cetacean parasites, came from the pen of one of our most outstanding helminthologists -- Prof S. Ya. Delyamure.

Special mention should be given to the apt presentation of the material in every chapter: the first factual part is followed by an analysis of hypotheses and views and is concluded with an evaluation of the most interesting problems.

The book is written in a vivid style despite the fact that it is not a popular publication but a scientific monograph. The text is further embellished with numerous illustrations (over 200) many of which are published for the first time.

4/4

APPROVED FOR RELEASE: 09/17/2001 CIA-RDP86-00513R002203030004-7"

"APPROVED FOR RELEASE: 09/17/2001 CIA-RDP86-00513R002203030004-7

USSR UDC: 669.295:620.1

KRASNIKOV, N. Ye., SKRYABIN, N. P., KOCHETOV, I. M.

"Deformation Resistance of Titanium Alloys at High Temperatures"

Moscow, Tsvetnyye Metally, No 12, Dec 73, pp 51-53.

Abstract: A formula is recommended for practical calculations of the strength of titanium alloys in the 700-900° C interval, with degrees of deformation up to 40% and deformation rates up to 150 sec^{-1}. The formula recommended is:

$$\frac{\delta}{\delta_0} = \left(\frac{t_0}{t}\right)^{\alpha}\left(\frac{U}{U_0}\right)^{\beta}\left(\frac{\varepsilon}{\varepsilon_0}\right)^{\gamma}$$

where α, β and γ are empirical coefficients (unknown parameters).

1/1

APPROVED FOR RELEASE: 09/17/2001 CIA-RDP86-00513R002203030004-7"

"APPROVED FOR RELEASE: 09/17/2001 CIA-RDP86-00513R002203030004-7

USSR

UDC 669.295:621.77

KRASNIKOV, N. Ye., SKRYABIN, N. P., and BONDYUGIN, V. M.

"Deformation Characteristics of Titanium Alloys in Rolling"

Moscow, Tsvetnyye Metally, No. 7, Jul 71, pp 71—73

Abstract: The deformation process of titanium alloys was investigated by rolling composite and solid specimens of the alloys Vt1-1 , Vt5 , Vt8 , Vt15 , etc . The experiments revealed that the lower the plasticity and the higher the resistance to deformation of surface layers relative to central layers, the greater the widening of the rolled strip. For the calculation of the widening, formulas for the widening of steel strips with a certain correction can be used. A modified formula of A.I.Grishkov is presented from which the widening of titanium alloys can be calculated with a maximum discrepancy of 10 %. Three illustr., two formulas, one table, eight biblio. refs.

1/1

APPROVED FOR RELEASE: 09/17/2001 CIA-RDP86-00513R002203030004-7"

"APPROVED FOR RELEASE: 09/17/2001 CIA-RDP86-00513R002203030004-7

1/2 025 UNCLASSIFIED PROCESSING DATE--16OCT70

TITLE--RHEOENCEPHALOGRAPHY IN THE DIAGNOSIS OF BRAIN TUMORS -U-

AUTHOR-(04)-SHEFER, D.G., SKRYABIN, V.V., MYAKOTA, A.YE., SAKOVICH, V.P.

COUNTRY OF INFO--USSR

SOURCE--ZHURNAL NEVROPATOLOGII I PSIKHIATRII IMENI S. S. KORSAKOVA, 1970, VOL 70, NR 5, PP 680-684

DATE PUBLISHED--------70

SUBJECT AREAS--BIOLOGICAL AND MEDICAL SCIENCES

TOPIC TAGS--TUMOR, BRAIN, HYPERTENSION, INTRACRANIAL PRESSURE, DIAGNOSTIC MEDICINE

CONTROL MARKING--NO RESTRICTIONS

DOCUMENT CLASS--UNCLASSIFIED

PROXY REEL/FRAME--1996/0234 STEP NO--UR/0246/70/070/005/0680/0684

CIRC ACCESSION NO--AP0117486

UNCLASSIFIED

APPROVED FOR RELEASE: 09/17/2001 CIA-RDP86-00513R002203030004-7"

"APPROVED FOR RELEASE: 09/17/2001 CIA-RDP86-00513R002203030004-7

UNCLASSIFIED PROCESSING DATE--16OCT70

2/2 025

CIRC ACCESSION NO--AP0117486

ABSTRACT/EXTRACT--(U) GP-0- ABSTRACT. ON THE BASIS OF CLINICAL OBSERVATIONS OF 116 CASES WITH BRAIN TUMORS THE AUTHORS DISCUSS THECCHANGES OF REG DURING THE DIFFERENT STAGES OF THE HYPERTENSIVE SYNDROME. THE RESULTS OF SUCH STUDIES PERMIT TO CONCLUDE THAT THERE IS A CERTAIN CORRELATION BETWEEN THE CLINICAL STAGE OF INTRACTANIAL HYPERTENSION AND THE AMPLITUDE FREQUENCY CHARACTERISTICS IN THE REGISTERED CURVES. THE AUTHORS RECOMMENDED TO TAKE INTO CONSIDERATION THIS FACT IN A CLINICAL INTERPRETATION OF THE REG DATA, INASMUCH, AS THE FOCAL SYMPTOMS OF TUMORS MAY BE EXPRESSED ON THE BACKGROUND OF SUCH CHANGES OF THE REG WHICH IS CONDITIONED BY AN INCREASE OF THE INTRACRANIAL PRESSURE. FACILITY: KLINIKA NERVNYKH BOLEZNEY I NEYROKHIRURGII SVERDLOVSK MEDITSINSKOGO INSTITUTA.

UNCLASSIFIED

APPROVED FOR RELEASE: 09/17/2001 CIA-RDP86-00513R002203030004-7"

"APPROVED FOR RELEASE: 09/17/2001 CIA-RDP86-00513R002203030004-7

USSR

UDC 539.3

POPOV, S. A., SKRYABINA, T. A., BLOKHIN, V. K.

"Results of Calculating Metal Orthotropic Slabs of Bridge Bay Structures"

Tr. Mosk. in-ta inzh. zh.-d. transp. (Transactions of the Moscow Institute of Railway Transport Engineers), 1969, Vyp. 269, pp 30-44 (from RZh-Mekhanika, No 3, March 1970, Abstract No 3V162)

Translation: Using a finite-difference method, the performance of a steel orthotropic slab of a noncut bay structure in a truck bridge is examined as exerting a localized load, based on the hypothesis of the slab's orthotropicity. Five variants of the slab with different types of longitudinal ribs were calculated. Designs with placement of longitudinal and transverse ribs in the same and at different levels were examined. Resume

1/1

APPROVED FOR RELEASE: 09/17/2001 CIA-RDP86-00513R002203030004-7"

"APPROVED FOR RELEASE: 09/17/2001 CIA-RDP86-00513R002203030004-7

UNCLASSIFIED PROCESSING DATE--11SEP70

1/2 019

TITLE--EFFECT OF TEMPERATURE ON THE ADSORPTION OF GELATIN AND GELATIN ACTIVATED COLLOIDAL PARTICLES ON THE FREE SURFACE OF A HYDROSOL AIR

AUTHOR--KRASNOVA, G.S., SKRYLEV, L.D., MOKRUSHIN, S.G.

COUNTRY OF INFO--USSR

SOURCE--ZH. PRIKL. KHIM. (LENINGRAD) 1970, 43(3) 692-5

DATE PUBLISHED--------70

SUBJECT AREAS--CHEMISTRY

TOPIC TAGS--COLLOID, ADSORPTION, GEL, SULFIDE, HIGH TEMPERATURE EFFECT

CONTROL MARKING--NO RESTRICTIONS

DOCUMENT CLASS--UNCLASSIFIED

PROXY REEL/FRAME--1993/0279 STEP NO--UR/0080/70/043/003/0692/0695

CIRC ACCESSION NO--AP0113209

UNCLASSIFIED

ZZZZZZZZZZZZ

APPROVED FOR RELEASE: 09/17/2001 CIA-RDP86-00513R002203030004-7"

"APPROVED FOR RELEASE: 09/17/2001 CIA-RDP86-00513R002203030004-7

Z72 019 UNCLASSIFIED PROCESSING DATE--11SEP70

CIRC ACCESSION NO--AP0113209

ABSTRACT/EXTRACT--(U) GP-0- ABSTRACT. AT 20DEGREES AIR BUBBLES UNDER DYNAMIC CONDITIONS ADSORBED 3.0 AND 6.0 TIMES 10 PRIME NEGATIVE7 G-CM PRIEM2 OF GELATIN FROM ITS 0.02 AND 0.07PERCENT SOLNS., RESP. AN INCREASE OR A DECREASE OF THIS TEMP. LOWERED THE ADSORPTION OF GELATIN. ADSORPTION OF PARTICLES OF HYDROSOLS OF CD AND SB SULFIDES ACTIVATED WITH GELATIN BY AIR BUBBLES WAS INDEPENDENT OF TEMP. FROM 15 TO 45DEGREES, WHILE THE ADSORPTION OF ACTIVATED PB SULFIDE AND CU FERROCYANIDE HYDROSOLS DECREASESHARPLY IN THE SAME TEMP. INTERVAL. THIS OBSERVATION IS EXPLAINED BY THE ADSORPTION OF DISPERSED GELATIN BY COLLOIDAL SULFIDES OF CD AND SB, WHICH WERE COMPOSED OF SMALLER PARTICLES WHEN COMPARED TO PB AND CU CONTG. HYDROSOLS.

UNCLASSIFIED

APPROVED FOR RELEASE: 09/17/2001 CIA-RDP86-00513R002203030004-7"

"APPROVED FOR RELEASE: 09/17/2001 CIA-RDP86-00513R002203030004-7

5

UDC [illegible]

USSR

LEV, I. Ye., POZNYAK, L. A., [illegible], Yu. M., [illegible], S. [illegible], and [illegible], L. S., Dnepropetrovsk Metallurgical Institute

"Influence of Oxygen and Alloying Elements on Structure, Phase Composition, and Heat Resistance of Stamping Steels"

Novokuznetsk, Izv. VUZ, Chern. Metallurgiya, No 10, 1970, pp 99-103

Abstract: Specimens were cut from annealed and forged billets of [illegible] types of stamping steels, and were subjected to electrolysis in 0.3 n [illegible] at [illegible] C with a current density of 0.02 [illegible]. In the annealed state, the structure of the steels consisted of sorbite-like pearlite plus excess carbides. The least carbide heterogeneity was in the specimens containing moderate quantities of chromium, tungsten, and carbon (excess carbides increased with increasing quantity of these elements). The carbide phase consisted primarily of types $Me_{23}C_6$ and Me_6C compounds, the ratio between them depending on the composition and heat treatment. The greatest resistance to overheating was shown by the steels with predominate Me_6C carbides, as well as compositions with [illegible] Cr. Most of the steels studied showed a clearly expressed secondary hardening effect, the intensity and temperature intervals of which increase with an

1/2

APPROVED FOR RELEASE: 09/17/2001 CIA-RDP86-00513R002203030004-7"

"APPROVED FOR RELEASE: 09/17/2001 CIA-RDP86-00513R002203030004-7

USSR

LEV, I. Ya., et al, Izv. VUZ, Chern. Metallurgiya, No 10, 1970, pp 99-[illegible]

increasing content of chromium and tungsten. The alloying elements with the not noticeably influence the initial stages of decomposition of martensite during tempering at 455-675° K, increased heat resistance of the steels with higher heating.

2/2

APPROVED FOR RELEASE: 09/17/2001 CIA-RDP86-00513R002203030004-7"

"APPROVED FOR RELEASE: 09/17/2001 CIA-RDP86-00513R002203030004-7

1/2 023 UNCLASSIFIED PROCESSING DATE--13NOV70

TITLE--ON THE POSSIBILITY OF OPERATION OF A DIFFRACTION RADIATION GENERATOR UNDER CONDITIONS OF BACKWARD WAVE OSCILLATOR -U-

AUTHOR-(03)-SKRYNNIK, B.K., BALAKLITSKIY, I.M., KURIN, V.G.

COUNTRY OF INFO--USSR

5

SOURCE--UKRAYIN. FIZ. ZH. (USSR), VOL. 15, NO. 5, P. 717-23 (MAY 1970)

DATE PUBLISHED----MAY70

SUBJECT AREAS--PHYSICS

TOPIC TAGS--BACKWARD WAVE OSCILLATOR, ELECTROMAGNETIC WAVE DIFFRACTION, MICROWAVE GENERATOR

CONTROL MARKING--NO RESTRICTIONS

DOCUMENT CLASS--UNCLASSIFIED

PROXY REEL/FRAME--3005/1807 STEP NO--UR/0185/70/015/005/0717/0723

CIRC ACCESSION NO--AP0133712

UNCLASSIFIED

APPROVED FOR RELEASE: 09/17/2001 CIA-RDP86-00513R002203030004-7"

"APPROVED FOR RELEASE: 09/17/2001 CIA-RDP86-00513R002203030004-7

2/2 023 UNCLASSIFIED PROCESSING DATE--13NOV70

CIRC ACCESSION NO--AP0133712

ABSTRACT/EXTRACT--(U) GP-0- ABSTRACT. THE RESULTS ARE CONSIDERED OF AN EXPERIMENTAL STUDY OF THE BWO CONDITIONS TOGETHER WITH ACCOMPANYING DIFFRACTION RADIATION. THE LATTER WAS FOUND IN GENERATORS OF DIFFRACTION RADIATION (GDR) WHEN OPERATING IN A SHORTWAVE MILLIMETER RANGE UNDER AN INTERRRUPTED REGIME. A COMPARISON WAS MADE OF THESE OPERATING CONDITIONS WITH A 'PERFECT' REGIME OF DIFFRACTION RADIATION.

UNCLASSIFIED

APPROVED FOR RELEASE: 09/17/2001 CIA-RDP86-00513R002203030004-7"

"APPROVED FOR RELEASE: 09/17/2001 CIA-RDP86-00513R002203030004-7

USSR

UDC:621.317.421

GORSKAYA, E.M., SKRYNNIKOV, R.G. and
FRANK-KAMENETSKIY, A.V.

"Measurement of Magnetic Induction During Pendulum Oscillations of Magnetometer Measurement Trans former"

Moscow, Metrologiya, 1973, No 4, pp 73-79

Abstract: The subject magnetometer consists essentially of a pendulum oscillating in the magnetic field to be measured. The voltage generated in a coil mounted on the pendulum is proportional to the magnetic field. Three problems related to this magnetometer are solved: 1. With the pendulum oscillating in the plane of the magnetic meredian, the mean voltage for one period of oscillation is derived, the expression of errors committed by averaging the voltage for a fraction of a period is given. 2. The effect of the magnetic moment of the magnetometer base is analysed. 3. The effect of oscillations of the magnetometer base is investigated.

1/1

APPROVED FOR RELEASE: 09/17/2001 CIA-RDP86-00513R002203030004-7"

"APPROVED FOR RELEASE: 09/17/2001 CIA-RDP86-00513R002203030004-7

UDC 581.2

USSR

MOSKOVETS', S. M.; SKRYPAL', I. G.; Institute of Microbiology and Virology, Academy of Sciences Ukrainian SSR

"Mycoplasma as Agents of Plant Diseases"

Kiev, Mikrobiologicheskiy Zhurnal, Vol 33, No 3, May/Jun 71, pp 381-390

Abstract: The role of Mycoplasma in the pathogenesis of a number of diseases affecting apple, tomato, onion, carrot, clover, and other plants is discussed. The damage caused by these diseases is considerable, on occasion incurring losses equalling 45-100% of the crops. The history of the study of phytopathogenic Mycoplasma is given and a description of their biological and morphological characteristics. Topics for further study of these microorganisms are outlined. The study of Mycoplasma received its greatest impetus at a conference held in May 1966 at the New York Academy of Sciences, where a permanent International Committee on the Nomenclature of Bacteria was appointed.

1/3

APPROVED FOR RELEASE: 09/17/2001 CIA-RDP86-00513R002203030004-7"

"APPROVED FOR RELEASE: 09/17/2001 CIA-RDP86-00513R002203030004-7

USSR

MOSKOVETS', S. M., et al, Mikrobiologicheskiy Zhurnal, Vol 33, No 3, May/Jun 71, pp 381-390

Guided by the latest results obtained in the study of Mycoplasma, the Subcommittee created in the order of Mycoplasmatales a new class of microorganisms named Mollicutes, a class parallel to that of Schizomycetes. The new class includes all of the microorganisms which are filterable, can be cultivated on noncellular media, are nonreverting, and differ biologically and morphologically from bacteria, rickettsia, protozoa, and viruses parasitic in tissues. The sensitivity of Mollicutes to dyes is extremely low; they are, however, readily discernible and contrast well in electron microscopic investigations. For this reason the method of electron microscopy is the main method of investigation of Mycoplasma today. The phytopathogenic Mycoplasma are highly polymorphic, with a reproduction cycle which is also highly heterogeneous. The mycoplasmic etiology of plant diseases as established by electron microscopy is based on the presence of mycoplasma-like bodies in diseased plants, and the absence of such bodies in healthy plants; the therapeutic effect of tetracycline on the affected plants; and the disappearance of the

2/3

APPROVED FOR RELEASE: 09/17/2001 CIA-RDP86-00513R002203030004-7"

"APPROVED FOR RELEASE: 09/17/2001 CIA-RDP86-00513R002203030004-7

USSR

MOSKOVETS', S. M., et al, Mikrobiologicheskiy Zhurnal, Vol 33, No 3, May/Jun 71, pp 381-390

mycoplasma-like bodies from plants treated with tetracycline. These conclusions, however, are not sufficient in themselves unless they are corroborated by Koch's postulates. These postulates have already been confirmed in the case of such plant diseases as sugarcane streak, maize stunt, and alfalfa mosaic.

Further tasks in connection with the study of Mycoplasma are differentiation and classification of the various species of these microorganisms, study of their physiological and biochemical characteristics, development of methods of analyzing their nucleic acids, and determination of their serological activity.

3/3

APPROVED FOR RELEASE: 09/17/2001 CIA-RDP86-00513R002203030004-7"

"APPROVED FOR RELEASE: 09/17/2001 CIA-RDP86-00513R002203030004-7

USSR

UDC 621.391.2

SKRYPNIK, G. I., BELYAYEV, A. V.

"Theory of Optimal Linear Filtration"

Moscow, Radiotekhnika i elektronika, Vol XVII, No 2, 1972, pp 321-331

Abstract: Multidimensional linear systems are defined which insure optimal performance of a given linear operation on the useful signal by the Zadeh or Kalman numbers. The Pontryagin principle of the maximum permitted reduction of the problem of synthesis of the given devices to one and the same system of ordinary differential equations with different boundary conditions. For a useful signal satisfying a given system of equations, a simple quadratic representation of the optimal systems was obtained in the form of matrices of weight functions and finite expressions were obtained for the dispersion matrices of the estimates. The primary difficulty when implementing the optimal systems in this form consists in inversion of the n × n dimensional matrices. This can be avoided by appropriate selection of the basic matrices. Along with the quadratic representation of the systems, under defined conditions their behavior is described by differential equations. The results obtained are a generalization (for the investigated class of trajectories of the target) of the results of Kalman and Bussy [R. E. Kalman, R. S. Bussy, Works of the American Society of Mechanical Engineers, Series D] to the case of an arbitrary

1/2

APPROVED FOR RELEASE: 09/17/2001 CIA-RDP86-00513R002203030004-7"

"APPROVED FOR RELEASE: 09/17/2001 CIA-RDP86-00513R002203030004-7

USSR

SKRYPNIK, G. I., et al., Radiotekhnika i elektronika Vol XVII, No 2, 1972, pp 321-221

linear operator. The difference in the Zadeh and Kalman systems in this form is exhibited only in the initial positions.

2/2

APPROVED FOR RELEASE: 09/17/2001 CIA-RDP86-00513R002203030004-7"

"APPROVED FOR RELEASE: 09/17/2001 CIA-RDP86-00513R002203030004-7

USSR

UDC 547.569.2.341.26'118.07

VOLOSHIN, M. P., VIZGERT, R. V., SKRYPNIK, YU. G., L'vov, "Order of Lenin" Polytechnical Institute

"A Method of Making O,O-Dialkyl Phosphonomethylene Aryl Sulfides"

Moscow, Otkrytiya, Izobreteniya, Promyshlennyye Obraztsy, Tovarnyye Znaki, No 22, Aug 72, Author's Certificate No 345166, Div C, filed 18 Sep 70, published 14 Jul 72, p 97

Translation: This Author's Certificate introduces a method of making O,O-dialkylphosphonomethylene aryl sulfides. As a distinguishing feature of the patent, the process is simplified by reacting a O,O-dialkylphosphonomethylene diaryl sulfonate with thiophenol in an inert organic solvent such as acetone in the presence of potassium carbonate with subsequent isolation of the goal product by conventional methods.

1/1

APPROVED FOR RELEASE: 09/17/2001 CIA-RDP86-00513R002203030004-7"

"APPROVED FOR RELEASE: 09/17/2001 CIA-RDP86-00513R002203030004-7

USSR UDC 669.295.053.28

SKRYPNYUK, V. M., and RODYAKIN, V. V.

"Measuring the Surface of Sponge Titanium"

Sb. tr. Vses. n.-i. i proyektn. in-t titana (Collection of Works of the All-Union Scientific Research and Design Institute of Titanium), 1970, 5, pp 59-66 (from RZH-Metallurgiya, No 11, Nov 70, Abstract No 11G153)

Translation: The methodology and results of measurements of the surface of magnesium-thermal sponge Ti are presented. The method of low-temperature adsorption (the BET method) is used. Ar is used as the source of absorbate at the temperature of 196°. The size of the specific surface of sponge Ti, produced by the magnesium-thermal method is commercial apparatus, can reach 2.5 m^2/g. 2 ill., 1 table, 8 bibl. entries. Authors' abstract

1/1

APPROVED FOR RELEASE: 09/17/2001 CIA-RDP86-00513R002203030004-7"

"APPROVED FOR RELEASE: 09/17/2001 CIA-RDP86-00513R002203030004-7

USSR

UDC 669.295.053.28

SKRYPNYUK, V. M., MAL'SHIN, V. M.

"Problem of the Mechanism of Reducing Titanium Tetrachloride by Magnesium During the Production of Sponge Titanium"

V sb. Metalloterm. protsessy v khimii i metallurgii (Metallothermic Processes in Chemistry and Metallurgy -- collection of works), Novosibirsk, Nauka Press, 1971, pp 97-101 (from RZh-Metallurgiya, No 4, Apr 72, Abstract No 4G215)

Translation: The existing concepts of the mechanism of the interaction of $TiCl_4$ with Mg, the experimental methods of studying it, and some results of studying the kinetics of the reduction process in static and dynamic reactors are discussed. The bibliography has 12 entries.

1/1

APPROVED FOR RELEASE: 09/17/2001 CIA-RDP86-00513R002203030004-7"

"APPROVED FOR RELEASE: 09/17/2001 CIA-RDP86-00513R002203030004-7

USSR UDC 669.295

RODYAKIN, V. V., GEGER, V. E., SKRYPNYUK, V. M.

"Magnesium-Thermal Production of Sponge Titanium"

Magniyetermicheskoye Proizvodstvo Gubchatogo Titana [English version above], Metallurgiya Press, 1971, 216 pages.

Translation of Annotation: This book presents general information on the physical-chemical properties, production and consumption of magnesium-thermal titanium. The theoretical principles of the technological processes involved in the production of magnesium-thermal sponge titanium are presented. The technology of production of magnesium-thermal titanium, design of apparatus, methods for utilization of apparatus and methods for elimination of problems arising during operation are studied in detail. The book is designed for engineering-technical and scientific workers, and can also be useful to graduate students and students of technical schools, specializing in the area of titanium metallurgy. 82 Figures; 27 Tables; 139 Biblio. Refs.

TABLE OF CONTENTS

Foreword 5
Introduction 8
Chapter I. General Information 11

1/4

APPROVED FOR RELEASE: 09/17/2001 CIA-RDP86-00513R002203030004-7"

"APPROVED FOR RELEASE: 09/17/2001 CIA-RDP86-00513R002203030004-7

USSR UDC 669.295

RODYAKIN, V. V., GEGER, V. E., SKRYPNYUK, V. M., Magniyetermicheskoye Proizvodstvo Gubchatogo Titan, Metallurgiya Press, 1971, 216 pages.

Development of the Titanium Industry in the USSR 11
Physical-Chemical, Mechanical Properties and Applications of Titanium. Methods of Its Production 13
Chapter II. Preparation of Titanium Tetrachloride for Reduction 25
Physical-Chemical Properties 25
Production 28
Impurities in $TiCl_4$ 28
Methods of Purification of $TiCl_4$ 33
Chapter III. Preparation of Magnesium for Reduction 45
Physical-Chemical Properties 45
Production 48
Impurities in Magnesium 49
Transportation of Liquid Magnesium 54
Refining 59
Chapter IV. Theoretical Principles of Reduction of Titanium by Magnesium and Vacuum Separation of the Reaction Mass 69
Thermodynamic Analysis of Reactions Between $TiCl_4$ and Magnesium 69

2/4

APPROVED FOR RELEASE: 09/17/2001 CIA-RDP86-00513R002203030004-7"

"APPROVED FOR RELEASE: 09/17/2001 CIA-RDP86-00513R002203030004-7

USSR

UDC 669.295

RODYAKIN, V. V., GEGER, V. E., SKRYPNYUK, V. M., Magniyetermicheskoye Proizvodstvo Gubchatogo Titan, Metallurgiya Press, 1971, 216 pages.

Basic Regularities of Magnesium-Thermal Reduction of Titanium 76
Mechanism and Kinetics Specifics of the Interaction of Titanium Tetrachloride with Magnesium 87
Mechanism and Kinetics of Removal of Volatile Impurities from the Reaction Mass in a Vacuum 98
Nature of Residual Chlorine and Its Influence on Quality of Sponge Titanium 107
Chapter V. Apparatus and Technological Plans of Magnesium-Thermal Production of Titanium Sponge 112
Production of Titanium Sponge in Separating Apparatus 112
Production of Titanium in Semicombined Apparatus 117
Combined System of Production of Titanium 117
Production of Titanium Using Drilling-Out of Reaction Mass 119
Chapter VI. Apparatus for Magnesium Thermal Production of Sponge Titanium 121
Design of Reduction Apparatus 122
Design of Separation Apparatus 133
Design Specifics of Apparatus with Rotating Retort 138

3/4

APPROVED FOR RELEASE: 09/17/2001 CIA-RDP86-00513R002203030004-7"

"APPROVED FOR RELEASE: 09/17/2001 CIA-RDP86-00513R002203030004-7

USSR UDC 669.295

RODYAKIN, V. V., GEGER, V. E., SKRYPNYUK, V. M., Magniyetermicheskoye Proizvodstvo Gubchatogo Titan, Metallurgiya Press, 1971, 216 pages.

Vacuum Equipment for Magnesium Thermal Production of Titanium 141
Equipment for Breaking Out Blocks, Crushing, Sorting, Mixing and Storage of Sponge Titanium 153
Chapter VII. Technology of Magnesium Thermal Production of Sponge Titanium 161
Reduction 161
Vacuum Separation 178
Crushing of Sponge Titanium Block, Sorting, Mixing and Packing of Sponge in Containers 189
Chapter VIII. Means of Improvement of Magnesium Thermal Production of Titanium 198
Standardization of Sponge Titanium Production 199
Improvement and New Plans for Periodic Process of Titanium Production 204
Bibliography 207

4/4

APPROVED FOR RELEASE: 09/17/2001 CIA-RDP86-00513R002203030004-7"

"APPROVED FOR RELEASE: 09/17/2001 CIA-RDP86-00513R002203030004-7

USSR

UDC: 620.169.1.05

SKUBACHEVSKAYA, T. G.

"The Use of the Photoelectric Method of Measurement of Vibrations at High Temperatures"

Tr. Mosk. Aviats. In-Ta [Works of Moscow Aviation Institute], No 233, 1971, pp 255-260 (translated from Referativnyy Zhurnal Avtomatika, Telemekhanika i Vychislitel'naya Tekhnika, No 3, 1972, Abstract No 3 A350 by A. B.)

Translation: Methods are studied for measuring vibrations at high temperatures; for example, for testing of gas turbine blades (1500° C) or the combustion chambers of flow-through engines (2500° C). The possibilities of the photoelectric method are noted. Filament lamps, glow-discharge devices, electroluminescent elements, injection diodes, and lasers can be used as light sources. The light receivers include photoresistors, photodiodes, phototransistors, photoelectric cells, and photomultipliers. A circuit of a system for fatigue testing of refractory materials is studied. 2 figures; 4 references.

1/1

APPROVED FOR RELEASE: 09/17/2001 CIA-RDP86-00513R002203030004-7"

"APPROVED FOR RELEASE: 09/17/2001 CIA-RDP86-00513R002203030004-7

USSR UDC: 621.375.4

POLEVOY, O. Z., SKUBACHEVSKAYA, T. G.

"On Determining the Current in the Load in Calculating Circuits Based on Thyristors"

Tr. Mosk. aviats. in-ta (Works of the Moscow Aviation Institute), 1970, vyp. 220, pp 8-11 (from RZh-Radiotekhnika, No 5, May 71, Abstract No 5D142)

Translation: An amplifier circuit based on thyristors is considered for the case of a sinusoidal voltage supply; symmetric control of the thyristors is assumed. An expression is derived for calculating the shape of the current in a complex load. Two illustrations, bibliography of one title. N. S.

1/1

APPROVED FOR RELEASE: 09/17/2001 CIA-RDP86-00513R002203030004-7"

"APPROVED FOR RELEASE: 09/17/2001 CIA-RDP86-00513R002203030004-7

1/2 022 UNCLASSIFIED PROCESSING DATE--04DEC70

TITLE--PHYSICAL PROPERTIES OF THE XSB SUB2 S SUB3, 1,X,SB SUB2 SE SUB3 SEMICONDUCTOR SYSTEM -U-

AUTHOR-(02)-SKUBENKO, A.F., MOZOL, P.YE.

S

COUNTRY OF INFO--USSR

SOURCE--UKR. FIZ. ZH. (RUSS. ED.) 1970, 15(4), 687-9

DATE PUBLISHED--------70

SUBJECT AREAS--PHYSICS

TOPIC TAGS--ANTIMONY SULFIDE, SELENIDE, SEMICONDUCTOR MATERIAL, TEMPERATURE DEPENDENCE, SPECTRAL DISTRIBUTION, SOLID SOLUTION

CONTROL MARKING--NO RESTRICTIONS

DOCUMENT CLASS--UNCLASSIFIED

PROXY REEL/FRAME--3007/1136 STEP NO--UR/0185/70/015/004/0687/0689

CIRC ACCESSION NO--AP0136556

UNCLASSIFIED

APPROVED FOR RELEASE: 09/17/2001 CIA-RDP86-00513R002203030004-7"

"APPROVED FOR RELEASE: 09/17/2001 CIA-RDP86-00513R002203030004-7

2/2 022 UNCLASSIFIED PROCESSING DATE--04DEC70

CIRC ACCESSION NO--AP0136556

ABSTRACT/EXTRACT--(U) GP-0- ABSTRACT. THE SPECTRAL DISTRIBUTION OF PHOTOCURRENT AND THE TEMP. DEPENDENCE OF DARK RESISTIVITY WERE MEASURED IN TERNARY SEMICONDUCTING SOLID SOLNS. OF SB SUB2 S SUB3 AND SB SUB2 SE SUB3 WITH VARIOUS AMTS. OF THE 2 COMPONENTS. THE COND. WAS ALWAYS P TYPE. THE BAND GAP FROM SPECTRAL DISTRIBUTION MEASUREMENTS WAS ALWAYS LESS THAN THE BAND GAP FROM TEMP. DEPENDENCE OF RESISTIVITY MEASUREMENTS, BUT THE DIFFERENCE WAS NOT THE SAME FOR ALL SPECIMENS. IT MAY BE DUE TO THE POSSIBLE DEPENDENCE OF THE TEMP. COEFF. OF THE BAND GAP ON THE COMPN. OF THE SOLID SOLNS. FACILITY: CHERNIGOV. PEDINST. IM. SHEVCHENKO, CHERNIGOV, USSR.

UNCLASSIFIED

APPROVED FOR RELEASE: 09/17/2001 CIA-RDP86-00513R002203030004-7"

"APPROVED FOR RELEASE: 09/17/2001 CIA-RDP86-00513R002203030004-7

1/2 020 UNCLASSIFIED PROCESSING DATE--30OCT70

TITLE--CATALYSTS FOR THE SYNTHESIS OF UNSATURATED POLYESTERS -U-

AUTHOR-(04)-SKUBIN, V.K., KUTEPOV, D.F., VALGIN, A.D., YERYSHEV, B.YA.

COUNTRY OF INFO--USSR

SOURCE--VYSOKOMOL. SOEDIN., SER. B 1970, 12(3), 171-3

DATE PUBLISHED--------70

SUBJECT AREAS--MATERIALS, CHEMISTRY

TOPIC TAGS--CATALYTIC ORGANIC SYNTHESIS, POLYESTER RESIN, OLIGOMER, POLYCONDENSATION, AMINE, HYDROXYL RADICAL, CHEMICAL REACTION MECHANISM, CATALYST

CONTROL MARKING--NO RESTRICTIONS

DOCUMENT CLASS--UNCLASSIFIED

PROXY REEL/FRAME--2000/0673 STEP NO--UR/0460/70/012/003/0171/0173

CIRC ACCESSION NO--AP0124345

UNCLASSIFIED

APPROVED FOR RELEASE: 09/17/2001 CIA-RDP86-00513R002203030004-7"

"APPROVED FOR RELEASE: 09/17/2001 CIA-RDP86-00513R002203030004-7

2/2 020 UNCLASSIFIED PROCESSING DATE--30OCT7(

CIRC ACCESSION NO--AP0124345

ABSTRACT/EXTRACT--(U) GP-0- ABSTRACT. OLIGOMERIC POLYESTERS, WHERE R IS ALKYL OR ARYL AND R PRIME1 IS SHOWN ON MICROFICHE, SYNTHESIZED BY POLYCONDENSING HO SUB2 C CH:CHCO SUB2 H WITH RNH SUB2 AND HOR PRIME1 OH, PNH SUB2 ACTS AS THE POLYCONDENSATION CATALYST (G. FODOR, 1960). THE MECHANISM OF THE REACTION WAS DISCUSSED. THE SOLNS. OF I IN PHCH:CH SUB2 OR TRIETHYLENE GLYCOL DIMETHACRYLATE ON ADDN. OF BZ SUB2 O SUB2 HARDENED AT ROOM TEMP. IN 10-60 MIN.

UNCLASSIFIED

APPROVED FOR RELEASE: 09/17/2001 CIA-RDP86-00513R002203030004-7"

"APPROVED FOR RELEASE: 09/17/2001 CIA-RDP86-00513R002203030004-7

USSR

UDC: 621.317.335

BARTASHEVSKIY, Ye. L., KANUNNIKOV, V. P., SKUBITSKIY, V. N.

"Use of Dielectric Resonators With Directional Coupling Elements to Measure Relative Permittivity"

Dokl. Vses. nauchno-tekhn. konferentsii po radiotekhn. izmereniyam. T. 1 (Reports of the All-Union Scientific And Technical Conference on Radio Engineering Measurements. Vol. 1), Novosibirsk, 1970, pp 75-76 (from RZh-Radiotekhnika, No 12, Dec 70, Abstract No 12A354)

Translation: In view of the difficulties which arise when dielectric resonators in the standing-wave or traveling-wave modes are used to measure complex permittivity, new modifications of standing-wave and traveling-wave dielectric resonators are proposed with directional couplers as their coupling elements. Both resonators are based on a circular dielectric waveguide with HE_{11} wave; the standing-wave dielectric resonator is tuned by moving a reflector, while the traveling-wave unit is tuned by displacement of the waveguide. It is noted that the traveling-wave dielectric resonator has a higher Q than the standing-wave unit, which makes it preferable for use. Two illustrations, bibliography of five titles. N. S.

1/1

APPROVED FOR RELEASE: 09/17/2001 CIA-RDP86-00513R002203030004-7"

"APPROVED FOR RELEASE: 09/17/2001 CIA-RDP86-00513R002203030004-7

USSR

UDC: 621.372.8

BARTASHEVSKIY, Ye. L., PRIVALOV, Ye. N., SKUBITSKIY, V. N.

"Calculation of Waveguides With Cross Sectional Irregularity"

Kiev, Radioelektronika, Vol 15, No 7, Jul 72, pp 839-841

Abstract: Formulas are derived for calculating irregular waveguides with nonhomogeneity in both the transverse and longitudinal cross section. The procedure is based on Fourier series representation of the piecewise-constant functions of permittivity and permeability, taking a rectangular waveguide as an example. The results are compared with exact solutions for two cases: with a dielectric plate 1) near the wall, and 2) in the center of the waveguide. It is found that agreement is better for the second case.

1/1

APPROVED FOR RELEASE: 09/17/2001 CIA-RDP86-00513R002203030004-7"

"APPROVED FOR RELEASE: 09/17/2001 CIA-RDP86-00513R002203030004-7

Acc. Nr: AP0052455 Ref. Code: UR0475

PRIMARY SOURCE: Vrachebnoye Delo, 1970, Nr 2, pp 61-64

CLINICAL CHARACTERISTICS OF FRESHLY DETECTED PATIENTS WITH DESTRUCTIVE AND CAVERNOUS FORMS OF PULMONARY TUBERCULOSIS

A. Ya. Skubko (Donetsk)

Paucity of symptoms is characteristic of patients with freshly detected destructive and cavernous forms of pulmonary-tuberculosis. In only 1/3 of patients pulmonary caverns were accompanied by typical symptoms. 50% of patients showed minimal symptoms of tuberculosis and in 13.1% they were completely absent. About one half of all patients showed a hypoergic character of specific reactions to tuberculin. Hemographic changes were absent in 50% of patients. Elimination of bacilli was found in all cases. The main criterion in the diagnosis of the destruction phase of patients with pulmonary tuberculosis thus remains roentgenographic diagnosis (mainly tomography).

1/1

2

REEL/FRAME
19821089

APPROVED FOR RELEASE: 09/17/2001 CIA-RDP86-00513R002203030004-7"

"APPROVED FOR RELEASE: 09/17/2001 CIA-RDP86-00513R002203030004-7

USSR

UDC [537.226+537.311.33]:[537+535]

BAGOCHYUNAYTE, R. I., POZHELA, YU. K., SKUCHAS, YU. P., SKUCHENE, A. L., and SHIMULITE, YE. A.

"Effect of Intercrystalline Barriers on Physical Properties of CdTe Thin Polycrystalline Films"

V sb. Tonkiye plenki soyedineniy tellura s metallami podgrupp tsinka i galliya (Thin Films of Tellurium Compounds With Metals of Zinc and Gallium Subgroups -- Collection of Works), Vil'nyus, 1970, pp 69-90 (from RZh-Fizika, No 10, Oct 71, Abstract No 10YE691 by V. B. SANDOMIRSKIY)

Translation: The authors investigated static and dynamic current-voltage characteristics of CdTe polycrystalline films. Photoelectromotive forces were measured. It is believed that the results can be explained if a film is conceived of as a system of crystallites in contact, described by the model of an asymmetrical n-n junction with blocking band bending at the interface.

1/1

APPROVED FOR RELEASE: 09/17/2001 CIA-RDP86-00513R002203030004-7"

"APPROVED FOR RELEASE: 09/17/2001 CIA-RDP86-00513R002203030004-7

USSR

UDC [537.226+537.311.33]:[537+535]

1

BAGOCHYUNAYTE, R. I., POZHELA, YU. K., SKUCHAS, YU. P., SKUCHENE, A. L., and SHIMULITE, YE. A.

"Effect of Intercrystalline Barriers on Physical Properties of CdTe Thin Polycrystalline Films"

V sb. Tonkiye plenki soyedineniy tellura s metallami podgrupp tsinka i galliya (Thin Films of Tellurium Compounds With Metals of Zinc and Gallium Subgroups -- Collection of Works), Vil'nyus, 1970, pp 69-90 (from RZh-Fizika, No 10, Oct 71, Abstract No 10YE691 by V. B. SANDOMIRSKIY)

Translation: The authors investigated static and dynamic current-voltage characteristics of CdTe polycrystalline films. Photoelectromotive forces were measured. It is believed that the results can be explained if a film is conceived of as a system of crystallites in contact, described by the model of an asymmetrical n-n junction with blocking band bending at the interface.

1/1

APPROVED FOR RELEASE: 09/17/2001 CIA-RDP86-00513R002203030004-7"

"APPROVED FOR RELEASE: 09/17/2001 CIA-RDP86-00513R002203030004-7

USSR

UDC 669.71.042.6

3

KUZNETSOV, K. I., GENISARETSKIY, M. A., GOROKHOV, V. P., SKUCHILOV, A. I., SHCHEGLOV, D. A., FIRSOV, V. M., KOZLOV, K. A.

"Development and Assimilation of Continuous Casting of Large Aluminum Ingots"

Tekhnol. Legkikh Splavov. Nauchno-tekhn. Byul. VILSa [The Technology of Light Alloys, Scientific and Technical Bulletin of the All-Union Institute of Light Alloys], 1970, No. 6, pp. 91-93. (Translated from Referativnyy Zhurnal Metallurgiya, No. 5, 1971, Abstract No. 5 G139 by G. Svodtseva).

Translation: The equipment and technology for casting large T-shaped ingots (I) of Al weighing 1 t were developed in 1963-1964 at the SMK (expansion unknown -- possibility: Siberian Metallurgical Combine). In 1969-1970, about 10,000 tons of large I were processed. The use of these I by metallurgical plants to replace the 15-kg I provides for: 1) complete elimination of manual labor in all loading and unloading operations from casting of I at the manufacturer to charging in the melting furnaces of metallurgical plants; 2) reduction in labor consumption by consumers during unloading of I from railroad cars by a factor of 4 by using lift trucks; 3) halving of storage area requirements; 4) reduction in labor consumption involved in transportation of I from railroad car to casting shop by 1.3 times; 5) reduction in labor consumption during charging into furnace by a factor of 2; 6) reduction in requirements for charging boxes by 40%; 7) reduction in melting time by 10-15%; 8) improvement of quality of metal of I

1/2

APPROVED FOR RELEASE: 09/17/2001 CIA-RDP86-00513R002203030004-7"

"APPROVED FOR RELEASE: 09/17/2001 CIA-RDP86-00513R002203030004-7

USSR

UDC 669.71.042.6

KUZNETSOV, K. I., GENISARETSKIY, M. A., GOROKHOV, V. P., SKUCHILOV, A. I., SHCHEGLOV, D. A., FIRSOV, V. M., KOZLOV, K. A., Tekhnol. Legkik Splavov. Nauchno-tekhn. Byul. VILSa, 1970, No. 6, pp. 91-93.

as a result of decreased gas content and increased metal purity with continuous casting. The ratio of the surface area of large I to volume is 6 times lower than that of 15 kg I as a result of which the charge includes less oxide film, which also improves the quality of the metal.

2/2

APPROVED FOR RELEASE: 09/17/2001 CIA-RDP86-00513R002203030004-7"

"APPROVED FOR RELEASE: 09/17/2001 CIA-RDP86-00513R002203030004-7

UDC 669.71.41

USSR

LIVANOV, V. A., GOROKHOV, V. P., KOLACHEV, B. A., KOFMAN, L. M., and SKUCHILOV, A. I.

"Filtration of Aluminum Melts Through Aluminum Oxide With Simultaneous Degasification by Neutral Gases"

Tr. Mosk. aviats. tekhnol. in-ta (Works of Moscow Aviation Technological Institute), 1970, vyp. 71, pp 88-93 (from RZh-Metallurgiya, No 12, Dec 70, Abstract No 12 G230 by authors)

Translation: The article presents a theoretical estimate of the quantity of neutral gas which must be passed through a melt in order to decrease the gas content a given number of times. The theoretical calculations agree well with the experimental data obtained during the degasification of aluminum with neutral gases and nitrogen. The gas content of aluminum is decreased especially effectively when aluminum is filtered through Al_2O_3 with simultaneous degasification by neutral gases. Two illustrations. One table. Bibliography of four titles.

1/1

APPROVED FOR RELEASE: 09/17/2001 CIA-RDP86-00513R002203030004-7"

"APPROVED FOR RELEASE: 09/17/2001 CIA-RDP86-00513R002203030004-7

Reliability Theory

USSR UDC: 621.396.6.002:658.5

PONUKHIN, N. P., SKUDARNOV, M. Ye., KUZ'MIN, G. M., CHERNYAVSKIY, Yu. M., POKROVSKIY, V. P.

"A Data Collection and Processing System for Operational Control of Radio Component Production Lines"

Elektron. tekhnika. Nauchno-tekhn. sb. Tekhnol. i organiz. proiz-va (Electronic Technology. Scientific and Technical Collection. Technology and Organization of Production), 1970, vyp. 4 (36), pp 94-101 (from RZh-Radiotekhnika, No 12, Dec 70, Abstract No 12V331)

Translation: The system makes it possible to monitor the operation of equipment, to take account of the number of good and rejected articles, to check their quality, to check on the course of technological processes, to give a light-panel display on the course of plan fulfilment, and to collect statistical data on operation of the line with electric typewriter printout. Resumé.

1/1

APPROVED FOR RELEASE: 09/17/2001 CIA-RDP86-00513R002203030004-7"

"APPROVED FOR RELEASE: 09/17/2001 CIA-RDP86-00513R002203030004-7

020 UNCLASSIFIED

TITLE--MECHANICAL PROPERTIES OF INDUSTRIAL STEELS CONTAINING RARE EARTH METALS -U- PROCESSING DATE--30OCT70

AUTHOR-(04)-GLADKIKH, A.N., GURASHOV, V.N., SKUDNOV, V.A., SOKOLOV, L.D.

COUNTRY OF INFO--USSR

SOURCE--METALLOVED. TERM. OBRAB. METAL. 1970. (3), 31-4

DATE PUBLISHED-------70

SUBJECT AREAS--MATERIALS, MECH., IND., CIVIL AND MARINE ENGR

TOPIC TAGS--RARE EARTH METAL, MECHANICAL PROPERTY, ALLOY DESIGNATION, MISCH METAL, STRUCTURAL STEEL, LANTHANUM, NEODYMIUM, SULFUR, METAL BRITTLENESS, IMPACT STRENGTH/(U)L9 STRUCTURAL STEEL, (U)L10 STRUCTURAL STEEL

CONTROL MARKING--NO RESTRICTIONS

DOCUMENT CLASS--UNCLASSIFIED

PROXY REEL/FRAME--1997/0015 STEP NO--UR/0129/70/000/003/0031/0034

CIRC ACCESSION NO--AP0119011

UNCLASSIFIED

APPROVED FOR RELEASE: 09/17/2001 CIA-RDP86-00513R002203030004-7"

"APPROVED FOR RELEASE: 09/17/2001 CIA-RDP86-00513R002203030004-7

2/2 020 UNCLASSIFIED

CIRC ACCESSION NO--AP0119011 PROCESSING DATE--30OCT70

ABSTRACT/EXTRACT--(U) GP-0- ABSTRACT. STEELS L9 AND L10 WITH ADDED RARE EARTH ELEMENTS (FE-CE, MISCH METAL, ND, LA, AND LA OXIDES) WERE MELTED ON A LAB. SCALE AND UNDER INDUSTRIAL CONDITIONS. ON THE LAB. SCALE THE DEOXIDN. WAS CARRIED OUT WITH FE-SI, AND SI-CA. THE RARE EARTH ADDITIVES WERE INTRODUCED AT THE BOTTOM OF A LADLE BY MEANS OF A ROD DURING THE TAPPING OPERATION AT 1560-900DEGREES. INGOTS WERE FORGED INTO RODS, DIAM. 20 MM. INDUSTRIAL MELTS WERE PRODUCED IN AN ELEC. FURNACE, DEOXIDIZED IN THE SAME WAY AS IN LAB. EXPTS. ALL SPECIMENS WERE NORMALIZED AT 910-40DEGREES, THEN QUENCHED AT 880-900DEGREES, AND TEMPERED AT 650DEGREES. THE INTRODUCTION OF RARE EARTH ELEMENTS RESULTS IN THE LOWERING OF THE CRIT. TEMP. OF BRITTLENESS, AND IN THE INCREASE OF IMPACT AND CYCLIC STRENGTH. THE INTRODUCTION OF 0.15-0.20PERCENT RARE EARTH ELEMENTS CAUSED A DECREASE (BY 27PERCENT) OF S CONCN. IN STEEL L9. THIS WAS PARTICULARLY EFFECTIVE WITH FECE AT 0.3PERCENT LEVEL. INCREASE OF RARE EARTH ELEMENTS ADDN. TO GREATER THAN 0.20PERCENT CAUSED A DETERIORATION OF STEEL PROPERTIES.

FACILITY: GOR'K. POLITEKH. INST., GORKI, USSR.

UNCLASSIFIED

APPROVED FOR RELEASE: 09/17/2001 CIA-RDP86-00513R002203030004-7"

"APPROVED FOR RELEASE: 09/17/2001 CIA-RDP86-00513R002203030004-7

USSR

UDC 669.76:79

SOKOLOV, L. D. (Editor), SKUDNOV, V. A., SOLENOV, V. M., GLADKIKH, A. N., SHETULOV, D. I., SHNEYBERG, A. M., GUSLYAKOVA, G. P., and DMITRIYEV, N. P.

Mekhanicheskiye Svoystva Redkikh Metallov (Mechanical Properties of Rare Metals), Moscow, Izdatel'stvo Metallurgiya, 1972, 288 pp

Translation of Annotation: A study is made of the mechanical properties (deformation resistance, plasticity, fatigue, creep, and stress-rupture strength) of rare and other metals, and their dependence on temperature and deformation rate. Characteristics of strain hardening, the stress and plasticity dependencies on temperature and deformation rate parameters, and other experimental data are discussed on the basis of the theory of defects and other contemporary concepts regarding the type of bonds in crystals.

The book is intended for scientists, engineers, and technicians at institutes, design institutions, nonferrous metallurgy plants, machinebuilding plants, and power engineering stations. It can also be useful to aspirants and students in higher educational institutions.

Table of Contents

Page

Foreword 3

APPROVED FOR RELEASE: 09/17/2001 CIA-RDP86-00513R002203030004-7"

"APPROVED FOR RELEASE: 09/17/2001 CIA-RDP86-00513R002203030004-7

USSR

SOKOLOV, L. D. (Editor), et al., Mekhanicheskiye Svoystva Redkikh Metallov (Mechanical Properties of Rare Metals), Moscow, Izdatel'stvo Metallurgiya, 1972, 288 pp

	Page
Introduction	4
Chapter 1. Conducting the Experiments and Processing of Experimental Data	
1. Materials and Preparation of Samples	6
2. Compression and Tension of Samples at Different Temperatures and Deformation Rates	10
3. Plasticity Indicators	15
4. Testing for Fatigue and Creep	16
Chapter 2. Pattern of Strain Hardening	
1. Deformation Diagrams	18
2. Dependence of the Hardening Indicator on Temperature	23
3. Dependence of the Hardening Coefficient on Deformation Rate	30
4. Dependence of the Hardening Coefficient on Grain Size and Impurities	31
5. Dependence of the Slopes of Hardening Curves on the Crystal Lattice Type and the Packing Energy Defects	32

APPROVED FOR RELEASE: 09/17/2001 CIA-RDP86-00513R002203030004-7"

"APPROVED FOR RELEASE: 09/17/2001 CIA-RDP86-00513R002203030004-7

USSR

SOKOLOV, L. D. (Editor), et al., Mekhanicheskiye Svoystva Redkikh Metallov (Mechanical Properties of Rare Metals), Moscow, Izdatel'stvo Metallurgiya, 1972, 288 pp

	Page
Chapter 5. Mechanisms of Plastic Deformation and Rupture	
1. Values of the Packing Energy Defects and Their Possible Correlation With the Lattice Bonding Type and With Polymorphism	183
2. Strain Hardening	191
3. The Nature of Temperature-Deformation Rate Dependence of the Resistance to Deformation and Plasticity	222
4. Physical Theory of the Fatigue of Metals	244
5. Some Patterns of the Established Creep Process	256
6. Mechanisms of Rupture and Creep	265
References	272

4/4

APPROVED FOR RELEASE: 09/17/2001 CIA-RDP86-00513R002203030004-7"

"APPROVED FOR RELEASE: 09/17/2001 CIA-RDP86-00513R002203030004-7

USSR

UDC 669.873:539.3

SKUDNOV, V. A., SOKOLOV, L. D., and GLADKIKH, A. N., Gor'kiy

"Nature of Thallium Deformability"

Moscow, Izvestiya Akademii Nauk SSSR, Metally, No 1, Jan-Feb 1970, pp 117-118

Abstract: The temperature dependences of the fatigue limit (σ), the relative elongation, and the contraction at two rates of deformation ($\dot{\varepsilon}$), as well as of index n, calculated by the formula

$$n = \frac{\log \frac{\sigma_{B2}}{\sigma_{B1}}}{\log \frac{\dot{\varepsilon}_2}{\dot{\varepsilon}_1}}$$

of thallium (99.998 wt. %) are shown. The dependences are of a nonmonotonous

1/2

APPROVED FOR RELEASE: 09/17/2001 CIA-RDP86-00513R002203030004-7"

"APPROVED FOR RELEASE: 09/17/2001 CIA-RDP86-00513R002203030004-7

USSR

SKUDNOV, V. A., et al, Izvestiya Akademii Nauk SSSR, Metally, No 1, Jan-Feb 1970, pp 117-118

character. A plasticity failure is observed, which with an increase on the order of the rate of deformation, shifts to an area of higher temperatures, at 0.25-0.30 of thallium melting temperature. The nature of the change in the plasticity index according to temperature correlates well with the high-speed index according to durability.

2/2

APPROVED FOR RELEASE: 09/17/2001 CIA-RDP86-00513R002203030004-7"

"APPROVED FOR RELEASE: 09/17/2001 CIA-RDP86-00513R002203030004-7

1/2 027 UNCLASSIFIED PROCESSING DATE--04DEC70

TITLE--MECHANICAL PROPERTIES OF INDUSTRIAL STEELS CONTAINING RARE EARTH METALS -U-

AUTHOR-(04)-GLADKIKH, A.N., GURASHOV, V.N., SKUDNOV, V.A., SOKOLOV, L.D.

COUNTRY OF INFO--USSR

SOURCE--METALLOVEDENIE I TERM. OBRABOT. METALLOV, 1970, (3), 31-34

DATE PUBLISHED--------70

SUBJECT AREAS--MATERIALS, MECH., IND., CIVIL AND MARINE ENGR

TOPIC TAGS--RARE EARTH METAL, IMPACT STRENGTH, CARBON STEEL, ALLOY STEEL, METAL BRITTLENESS, TOUGHNESS, FATIGUE STRENGTH, SULFUR, SULFIDE, DESULFURIZATION, METAL MECHANICAL PROPERTY

CONTROL MARKING--NO RESTRICTIONS

DOCUMENT CLASS--UNCLASSIFIED

PROXY REEL/FRAME--3005/0920 STEP NO--UR/0129/70/000/003/0031/0034

CIRC ACCESSION NO--AP0133009

UNCLASSIFIED

APPROVED FOR RELEASE: 09/17/2001 CIA-RDP86-00513R002203030004-7"

"APPROVED FOR RELEASE: 09/17/2001 CIA-RDP86-00513R002203030004-7

UNCLASSIFIED PROCESSING DATE--04DEC70

2/2 027

CIRC ACCESSION NO--AP0133009

ABSTRACT/EXTRACT--(U) GP-0- ABSTRACT. THE EFFECTS OF RARE EARTH METALS ON THE MECHANICAL PROPERTIES OF C AND ALLOY STEELS WERE STUDIED. THE INTRODUCTION OF RARE EARTH ELEMENTS INTO ANY OF THE STEELS REDUCED THE CRITICAL BRITTLENESS TEMP. AND RAISED THE IMPACT STRENGTH (TOUGHNESS); IT ALSO TENDED TO RAISE THE FATIGUE STRENGTH. THE INTRODUCTION OF 0.2PERCENT RARE EARTH METALS INTO ONE TYPE OF INDUSTRIAL STEEL REDUCED THE S CONTENT BY NEARLY 30PERCENT. A STILL GREATER EFFECT ON S CONTENT WAS ACHIEVED ON INTRODUCING 0.3PERCENT; HOWEVER, FROM GENERAL CONSIDERATIONS 0.2PERCENT CONSTITUTED THE NORMAL LIMIT.

UNCLASSIFIED

APPROVED FOR RELEASE: 09/17/2001 CIA-RDP86-00513R002203030004-7"

"APPROVED FOR RELEASE: 09/17/2001 CIA-RDP86-00513R002203030004-7

S

UDC 620.17:669.14.018.29

USSR

GLADKIKH, A. N., GURASHOV, V. N., SKUDNOV, V. A. and SOKOLOV, L. D. (Krasnoye Sormovo Plant, Gor'ki Polytechnic Institute)

"Mechanical Properties of Industrial Steels with Rare Earth Metals"

Moscow, Metallovedeniye i termicheskaya obrabotka metallov, No 3, 1970, pp 31-34

Abstract: An investigation was made of the effect of the addition of rare earth metals on the properties of 50G, Kh17N2, 09G2, 08KP, U7, U13, 60S2, and 18KhGSN2M steels (L9 and L10). Ferrocerium, neodymium, lanthanum, and lanthanum oxides were used as alloying additives. Laboratory and industrial samples of steels were normalized at 910-940°C, then hardened at 880-900° and tempered at 660-680°. Mechanical properties were investigated at -196 to 900°C, and at various strain rates. The results are presented in graphs, which show the effect of various rare earth metals on ductility. They show that: the addition of rare earth metals lowers the brittleness critical temperature, while the ductility and cyclical strength of steels increase; the sulfur content decreases; and the addition of more than 0.20% of rare earth metals impairs the steel properties. 5 figures.

1/1

APPROVED FOR RELEASE: 09/17/2001 CIA-RDP86-00513R002203030004-7"

"APPROVED FOR RELEASE: 09/17/2001 CIA-RDP86-00513R002203030004-7

1/2 030 UNCLASSIFIED PROCESSING DATE--11SEP70

TITLE--HEAT RESISTANCE PROPERTIES OF CERTAIN PURE METALS -U-

AUTHOR--SOKOLOV, L.D., SOLENOV, V.M., SKUDNOV, V.R., SHNEYIBERG, A.M., GLADKIKH, A.N.

COUNTRY OF INFO--USSR

SOURCE--AKADEMIIA NAUK SSSR, IZVESTIIA, METALLY, MAR. APR. 1970 P. 181-189

DATE PUBLISHED--------70

SUBJECT AREAS--MATERIALS, PHYSICS

TOPIC TAGS--DIAMOND, CRYSTAL LATTICE STRUCTURE, HEAT RESISTANT METAL, PLASTIC DEFORMATION, INTERNAL STRESS, THERMAL EFFECT, LANTHANUM

CONTROL MARKING--NO RESTRICTIONS

DOCUMENT CLASS--UNCLASSIFIED

PROXY REEL/FRAME--1990/0339 STEP NO--UR/0370/70/000/000/0181/0189

CIRC ACCESSION NO--AP0108637

UNCLASSIFIED

APPROVED FOR RELEASE: 09/17/2001 CIA-RDP86-00513R002203030004-7"

"APPROVED FOR RELEASE: 09/17/2001 CIA-RDP86-00513R002203030004-7

UNCLASSIFIED PROCESSING DATE--11SEP70

2/2 030

CIRC ACCESSION NO--AP0108637

ABSTRACT/EXTRACT--(U) GP-0- ABSTRACT. STUDY OF THE RESISTANCE TO UNIAXIAL DEFORMATION AND OF THE PLASTIC PROPERTIES OF POLYCRYSTALLINE LANTANIDES AND OTHER METALS SUBJECTED TO COMPRESSION AND TENSION AT DIFFERENT TEMPERATURES AND STRAIN RATES. IT IS FOUND THAT FOR EQUAL HOMOLOGOUS TEMPERATURES AND STRAIN LEVELS, THE SENSITIVITY TO CHANGES IN THE TEMPERATURE AND STRAIN RATE INCREASES WITH AN INCREASE IN THE STACKING FAULT ENERGY AND A DECREASE OF THE LATTICE COORDINATION NUMBER ACCORDING TO THE SEQUENCE FCC, HCP, BCC, AND DIAMOND TYPE LATTICE.

UNCLASSIFIED

APPROVED FOR RELEASE: 09/17/2001 CIA-RDP86-00513R002203030004-7"

"APPROVED FOR RELEASE: 09/17/2001 CIA-RDP86-00513R002203030004-7

1/3 . 022 UNCLASSIFIED PROCESSING DATE--13NOV70

TITLE--THE FOURTH SYMPOSIUM ON EQUILIBRIUM DIAGRAMS OF SEMICONDUCTOR SYSTEM -U-

AUTHOR-(02)-SKUONOVA, E.V., PORETSKAYA, L.V.

COUNTRY OF INFO--USSR

SOURCE--MOSCOW, NEORGANICHESKIYE MATERIALY, VOL 6, NO 5, MAY 70 PP 1036-9

DATE PUBLISHED-------70

SUBJECT AREAS--BEHAVIORAL AND SOCIAL SCIENCES, ELECTRONICS AND ELECTRICAL ENGR., PHYSICS

TOPIC TAGS--SEMICONDUCTOR PHYSICS CONFERENCE, SEMICONDUCTOR PROPERTY, STOICHIOMETRY, HALL EFFECT, ELECTRIC PROPERTY, MAGNETIC PROPERTY, THERMOELECTRIC PROPERTY

CONTROL MARKING--NO RESTRICTIONS

DOCUMENT CLASS--UNCLASSIFIED

PROXY REEL/FRAME--3006/0053 STEP NO--UR/0363/70/006/005/1036/1039

CIRC ACCESSION NO--AP0133927

UNCLASSIFIED

APPROVED FOR RELEASE: 09/17/2001 CIA-RDP86-00513R002203030004-7"

"APPROVED FOR RELEASE: 09/17/2001 CIA-RDP86-00513R002203030004-7

UNCLASSIFIED PROCESSING DATE--13NOV70

2/3 . 022

CIRC ACCESSION NO--AP0133927

ABSTRACT/EXTRACT--(U) GP-0- ABSTRACT. THE SYMPOSIUM WAS HELD SEPTEMBER 9-10, 1969 IN NOGINSK SCIENTIFIC CENTER. THE FOLLOWING PAPERS WERE DELIVERED: "THE EFFECT OF DEVIATIONS FROM STOICHIOMETRY ON THE ALLOYING OF LEAD TELLURIDE WITH IODINE" (NOVOSELOVA, A. V., ZLOMANOV, V. P., AND GAS'KOV, A. M.); "DEFECTS IN GALLIUM ARSENIDE" (BORISOVA, L. A., ZHELIKHIVKAYA, E. I., AND MIRONOV, K. YE.); "EFFECT OF DEFECTS ON THE ELECTRICAL PROPERTIES OF CD SUB3 AS SUB2" (SHEVCHENKO, V. YA., GONCHARENKO, G. I., ZAYETS, I. F., AND OVDRYAKIN, V. F.); "DETERMINATION OF THE CONCENTRATION OF CHARGED POINT DEFECTS IN THE SNTE-PBTE SYSTEM BY MEANS OF THE HALL EFFECT" (DRMONT, B. F., MILOSLAVOV, S.L., AND TAIROV, S. M.); "NATURE OF THE DEFECTS IN ALUMINUM NITRIDE" (GORBATOVA, A. G., AND KAMYASHOVA, V. M.) "SYNTHESIS AND STUDY OF NONSTOICHIOMETRIC PHASES OF TIO" (AYDAZOV, M. I., DOMASHEVA, I. A., SARKISYANA, A. G., AND MURANEVICH, A. KH.) "EFFECT OF THE PARTIAL PRESSURE OF OXYGEN AND OF TEMPERATURE OF THE ELECTRICAL PROPERTIES OF LIQUID VANADIUM PENTOXIDE" (MUSIKHIN, V. I., PASTUKHOV, E. A., VATOLIN, I. A., AND LENINSKIKH, B. M.); "STUDY OF THE EQUILIBRIUM P-T-X DIAGRAMS OF OXIDES" (VOROB'YEV, YU. P., BOGDANOVICH, M. P., MEN', A. N., AND CHUFAROV, G. I.). KRESTOVNIKOV, A. N. AND ROMANTSEVA, A. A. DISCUSSED THE PHASE OF SINGLE CRYSTAL IN THE BI-TE SYSTEM. TSYPIN, M. I., OSTROVSKAYA, L. M., AND KHARITONOVA, L. D. TALKED ABOUT THE ROLE OF ELASTIC DISTORTIONS IN THE FORMATION OF ADDITIONAL HEAT RESISTANCE OF THE CRYSTALLINE LATTICE, WHEN A COMPOSTION DEVIATES FROM STOICHIOMETRY.

UNCLASSIFIED

APPROVED FOR RELEASE: 09/17/2001 CIA-RDP86-00513R002203030004-7"

"APPROVED FOR RELEASE: 09/17/2001 CIA-RDP86-00513R002203030004-7

UNCLASSIFIED PROCESSING DATE--13NOV70

3/3 022

CIRC ACCESSION NO--AP0133927

ABSTRACT/EXTRACT--GORELIK, S. S., MALOVETSKAYA, V. M., BU NOVA, V. I., AND LETYUK, L. M. REPORTED ON THE THERMOELECTRIC AND MA ETIC PROPERTIES OF ND SUB2 SE SUB3-ND SUB3 SE SUB4 AND SM SUB2 SE SUB3-S SUB3 SE SUB4 SOLID SOLUTIONS. SADOVSKAYA, O. A., AND YAREMBASH, YE. ., STUDIED PHASE EQUILIBRIA IN THE EU-TE SYSTEM. BOL'SHAKOV, K. , BUL'UNKOV, I. A., AND BELYANIN, A. F., DISCUSSED THE RELATIONSHIP OF DISLOCATIONAL STRUCTURE OF THE ALLOYS IN THE MG SUB2 SI-MG SUB3 SB SUB2 SYSTEM. LUFT, B. D., REVIEWED METHODS FOR ANALYZING SMALL AMOUNTS OF ADMIXTURES.

UNCLASSIFIED

APPROVED FOR RELEASE: 09/17/2001 CIA-RDP86-00513R002203030004-7"

"APPROVED FOR RELEASE: 09/17/2001 CIA-RDP86-00513R002203030004-7

S

UDC 002.704.31

USSR

SKUDNOVA, E. V., PORETSKAYA, L. V.

"The Fourth Symposium on Equilibrium Diagrams of Semiconductor Systems"

Moscow, Neorganicheskiye Materialy, Vol 6, No 5, May 70, pp 1034-1035

Abstract: The symposium was held September 9-10, 1969 in Noginsk Scientific Center. The following papers were delivered: "The effect of deviations from stoichiometry on the alloying of lead telluride with iodine" (NOVOSELOVA, A. V., ZLOMANOV, V. P., and GAS'KOV, A. M.); "Defects in gallium arsenide" (BORISOVA, L. A., ZHELIKHIVSKAYA, E. I., and MIRONOV, K. YE.); "Effect of defects on the electrical properties of Cd_3As_2" (SHEVCHENKO, V. YA., GONCHARENKO, G. I., ZAYETS, I. F., and DVORYAKIN, V. F.); "Determination of the concentration of charged point defects in the SnTe-PbTe system by means of the Hall effect" (ORMONT, B. F., MILOSLAVOV, S. L., and TAIROV, S. M.); "Nature of the defects in aluminum nitride" (GORBATOVA, A. G., and KAMYASHOVA, V. M.) "Synthesis and study of non-stoichiometric phases of TiO" (AYBAZOV, M. I., DOMASHEVA, I. A., SARKISYANA, A. G., and MURANEVICH, A. KH.); "Effect of the

1/2

APPROVED FOR RELEASE: 09/17/2001 CIA-RDP86-00513R002203030004-7"

"APPROVED FOR RELEASE: 09/17/2001 CIA-RDP86-00513R002203030004-7

USSR

SKUDNOVA, E. V., et al, Neorganicheskiye Materialy, Vol 6, No 5, May 70, pp 1034-1035

partial pressure of oxygen and of temperature of the electrical properties of liquid vanadium pentoxide" (MUSIKHIN, V. I., PASTUKHOV, E. A., VATOLIN, I. A., and LENINSKIKH, B. M.); "Study of the equilibrium p-T-x-diagrams of oxides" (VOROB'YEV, YU. P., BOGDANOVICH, M. P., MEN', A. N., and CHUFAROV, G. I.). KRESTOVNIKOV, A. N. and ROMANTSEVA, A. A. discussed the -phase of single crystals in the Bi-Te system. TSYPIN, M. I., OSTROVSKAYA, L. M., and KHARITONOVA, L. D. talked about the role of elastic distortions in the formation of additional heat resistance of the crystalline lattice, when a composition deviates from stoichiometry. GORELIK, S. S., MALOVETSKAYA, V. M., BUZANOVA, V. I., and LETYUK, L. M. reported on the thermoelectric and magnetic properties of Nd_2Se_3-Nd_3Se_4 and Sm_2Se_3-Sm_3Se_4 solid solutions. SADOVSKAYA, O. A., and YAREMBASH, YE. I., studied phase equilibria in the Eu-Te system. BOL'SHAKOV, K. A., BUL'ONKOV, I. A., and BELYANIN, A. F., discussed the relationship of dislocational structure of the alloys in the Mg_2Si-Mg_3Sb_2 system. LUFT, B. D., reviewed methods for analyzing small amounts of admixtures.

2/2

APPROVED FOR RELEASE: 09/17/2001 CIA-RDP86-00513R002203030004-7"

"APPROVED FOR RELEASE: 09/17/2001 CIA-RDP86-00513R002203030004-7

USSR

UDC: 620.17:669.295:620.186.1

MAL'TSEV, M. V., VOLKOVA, T. N., SKUDNOV, V. A., Gorky Polytechnic Institute imeni A. A. Zhdanov

"Influence of Cooling Rate on Phase Composition and Mechanical Properties of VT16 Alloy"

Metallovedeniye i Termicheskaya Obrabotka Metallov, No 9, 1973, pp 49-52.

Abstract: The influence of cooling rate on phase composition and mechanical properties of VT16 titanium alloy was studied on cold-drawn bars 6.15 mm in diameter. After heating to 600-950° C and holding for two hours, the bars were cooled in water, in air, in a container in air and in a container with the furnace. In all cases, the specimens were heated under a vacuum of 10^{-4} mm hg. The cooling rate in air averaged 10° per minute, with the furnace -- 3° per minute. It was found that increasing the heating temperature and cooling rate increases the structural instability of VT16, significantly influencing mechanical properties and phase composition. The minimum yield point of the alloy follwoing hardening from various temperatures corresponds to the maximum content of beta phase. The beginning of the sharp decrease in yield point with increasing hardening temperature corresponds to the appearance of the alpha "phase" in the structure. The strain hardening during

1/2

APPROVED FOR RELEASE: 09/17/2001 CIA-RDP86-00513R002203030004-7"

"APPROVED FOR RELEASE: 09/17/2001 CIA-RDP86-00513R002203030004-7

USSR

Mal'tsev, M. V., Volkova, T. N., Skudnov, V. A., Metallovedeniye i Termicheskaya Obrabotka Metallov, No 9, 1973, pp 49-52.

extension of specimens subjected to hardening and annealing with heating to from 750 to 900° C is the same. For annealed specimens, it is somewhat less with low degrees of deformation, for hardened specimens -- at higher degrees of deformation. The ductility of hardened specimens is slightly higher than that of annealed specimens in this case.

2/2

APPROVED FOR RELEASE: 09/17/2001 CIA-RDP86-00513R002203030004-7"

"APPROVED FOR RELEASE: 09/17/2001 CIA-RDP86-00513R002203030004-7

SKUDNOV, V. A.

TECHNICAL TRANSLATION

FSTC-HT-23- 503-71

ENGLISH TITLE: DEFORMABILITY OF NEODYMIUM AS A FUNCTION OF TEMPERATURE DEFORMATION RATE

FOREIGN TITLE: DEFORMIRUEMOSTI NEODIMA VFUNKTSII TEMPERATURY I SKOROSTI DEFORMATSII

AUTHOR: V. A. Skudnov, L. D. Sokolov and A. N. Gladkikh

SOURCE: IZVESTIYA AKADEMII NAUK BSSR, SERIYA FIZIKO-TEKHNICHESKIKH NAUK, No. 2, 1969, pp. 114-116

Translated for FSTC by ACSI

NOTICE

The contents of this publication have been translated as presented in the original text. No attempt has been made to verify the accuracy of any statement contained herein. This translation is published with a minimum of copy editing and graphics preparation in order to expedite the dissemination of information. Requests for additional copies of this document should be addressed to Department A, National Technical Information Service, Springfield, Vuginia 22151. Approved for public release; distribution unlimited.

APPROVED FOR RELEASE: 09/17/2001 CIA-RDP86-00513R002203030004-7"

"APPROVED FOR RELEASE: 09/17/2001 CIA-RDP86-00513R002203030004-7

USSR

UDC 539.4

SOLENOV, V. M., SKUDNOV, V. A., SOKOLOV, L. D., GLADKIKH, A. N., Gor'kiy Polytechnical Institute, Gor'kiy

"Study of the Temperature-Rate Dependence of the Strength and Plasticity Characteristics of Lutecium"

Kiev, Problemy prochnosti, No. 8, Aug 71, pp 61-63

Abstract: A technique is described for studying the effect of temperature-rate factors on the strength and deformation characteristics of lutecium. The lutecium sample in this case had the following chemical composition: Lu -- 95.72 wt. %; Er -- 0.25, Tu -- 3.5, Ib <0.1, Ca -- 0.4, Fe -- 0.025, Cu <0.005. Samples for stretching had a diameter of 1.5 mm and a working length of 8 mm, and samples for sag tests had a diameter of 1.5 mm and a height of 0.25 mm. Experiments were conducted at temperatures of -80, 110, 304, 497, 689, and 882°C and at various deformation rates ($4 \cdot 10^{-3}$, $2 \cdot 10^{-2}$, $2 \cdot 10^{-2}$ sec^{-1}); destruction tests were conducted at temperatures of -80, 304, 497 and 689°C with a deformation rate of $2 \cdot 10^{-2}$ sec^{-1}. Samples were deformed in an argon medium and the experiments were conducted after holding for 10-15 min at a given temperature.

1/2

APPROVED FOR RELEASE: 09/17/2001 CIA-RDP86-00513R002203030004-7"

"APPROVED FOR RELEASE: 09/17/2001 CIA-RDP86-00513R002203030004-7

USSR

SOLENOV, V. M., et al, Problemy prochnosti, No. 8, Aug 71, pp 61-63

The device used for the sag tests is described. Graphs of the deformation of lutecium at different temperatures and rates of deformation show that the strength rises with a drop in temperature and with an increase in the deformation rate. The temperature dependence of the stress σ shows a nonmonotonic graph with a hump at the deformation aging temperature. The studies showed the possibility of the plastic working of Lu over a wide temperature range by using soft deformation techniques. It is noted that a purer metal should have even higher plasticity.

2/2

APPROVED FOR RELEASE: 09/17/2001 CIA-RDP86-00513R002203030004-7"

"APPROVED FOR RELEASE: 09/17/2001 CIA-RDP86-00513R002203030004-7

UDC: 621.396.677.833(088.8)

USSR

PRISHLIN, V. I., SKUGAROV, V. I.

"A Spherical Bireflector Antenna"

USSR Author's Certificate No 248011, filed 10 Jan 68, published 7 Jan 70 (from RZh-Radiotekhnika, No 7, Jul 70, Abstract No 7B68 P)

Translation: The proposed antenna consists of steerable radiators such as waveguide cells with commutating diodes which are located on a spherical surface, auxiliary mirrors and exciters located on the inside surface of the sphere. When a wave is incident on the sphere, the steerable radiators pass the wave into the sphere and reflect the energy flux from the inside surface of the sphere. After reflection from the surface of the auxiliary reflector, the energy enters the exciter. In this way the radiation pattern sweeps through all space. One illustration. A. K.

1/1

APPROVED FOR RELEASE: 09/17/2001 CIA-RDP86-00513R002203030004-7"

"APPROVED FOR RELEASE: 09/17/2001 CIA-RDP86-00513R002203030004-7

USSR UDC: 678:5.02:539.4.011.25

Skudra, A. M.
[redacted]

"The Strength of Fiber Composites"

Riga, Mekhanika Polimerov, No 3, 1972, pp 553-562

Abstract: A review of works dedicated to the investigation of the influence of various factors on the strength of fiber composites in extension, compression, shear, bending, and planar stressed states published in the Journal Mekhanika Polimerov is presented. The most important trends for future investigations are formulated. Trends which require expansion in the immediate future include studies on investigation of the time dependence of strength in planar stressed states, investigations on the kinetics of rupture of fiber composites in extension, compression and shear considering various technological and operational factors, development of the theory of rupture of composite materials considering the actual stress field in their components, and on the contact surface between binding and reinforcement. The development of the theory of elasticity of composite materials must be continued.

1/1

APPROVED FOR RELEASE: 09/17/2001 CIA-RDP86-00513R002203030004-7"

"APPROVED FOR RELEASE: 09/17/2001 CIA-RDP86-00513R002203030004-7

USSR UDC 911.3.616.9.576.895(470.324)

SKUF'IN, K. V.

"The Development of Medical Entomology and Arachnology in Voronezhskaya Oblast"

V sb. Prikl. entomologiya v tsentr. chernozem. obl. (Applied Entomology in Central Chernozem Oblasts -- collection of works), Voronezh, 1970, pp 21-35 (from RZh-36. Meditsinskaya geografiya, No 1, Jan 71, Abstract No 1.36.68)

Translation: A research history is presented of several arthropod groups found in Voronezhskaya Oblast (mosquitoes - malaria vectors, and various types of blood-sucking insects such as midges, biting midges, mosquitoes, horseflies) in connection with their probable role in transmitting tularemia bacteria and also flies, and some Coleoptera, Mallophaga, fleas, and Ixodes and Gamasid ticks.

1/1

APPROVED FOR RELEASE: 09/17/2001 CIA-RDP86-00513R002203030004-7"

"APPROVED FOR RELEASE: 09/17/2001 CIA-RDP86-00513R002203030004-7

USSR

UDC 621.371

DMITRIYEV, V. I., KOROLEVA, K. P., SKUGAREVSKAYA, O. A., and FEDOROVA, E. A.

"Investigating the Electromagnetic Field of an Electric Dipole in the Presence of Powerful High-Resistance Layers in the Earth"

Moscow, V sb. X Vses. konf. po rasprostr. radiovoln. Tezisy dokl. Sekts. 6 (Tenth All-Union Conference on the Propagation of Radio Waves; Report Theses; Section 6--collection of works) "Nauka," 1972, pp 40-44 (from RZh--Radiotekhnika, No 10, 1972, Abstract No 10A388)

Translation: Computation of the field with powerful high-resistance layers in the earth involves a great deal of difficulty, caused by the need for computing integrals in the Hankel inverse transform. For this purpose, a calculating algorithm is developed by which the function under the integral sign is approximated in the low-frequency region with the required degree of accuracy. For the high-frequency region, where the required degree of accuracy cannot be attained, asymptotic formulas are obtained for making the calculations with the presence of the layers taken into account. Three illustrations, bibliography of two. N. S.

1/1

APPROVED FOR RELEASE: 09/17/2001 CIA-RDP86-00513R002203030004-7"

"APPROVED FOR RELEASE: 09/17/2001 CIA-RDP86-00513R002203030004-7

USSR

UDC 621.777.07.001.5

GUN, G. Ya., POLUKHIN, P. I., RUTMAN, G. G., SKUGAREV, V. I., and KOSYREV, V. K.

"An Experimental Investigation of the Speeds of Effusion During Pressing in Two-Channel Dies"

Plasticheskaya Deformatsiya Metallov i Splavov, Moscow, No 64, "Metallurgiya," 1970, pp 208-211

Translation: While developing the optimal design of pressing dies, it was necessary to make a series of experiments to analyze the kinematic conditions of the process. In this work, the influence of the ratio of the areas and shape of orifices in a flat two-channel die on the exit speed of sections being pressed is studied. A method is developed for measuring the speeds of metal effusion. The results obtained are evidence of the slight influence of section shapes on the nature of change in the speed as a function of the ratio of their section areas. A significant difference in metal effusion manifests itself where the ratio of areas is greater than two. Four figures and one bibliographic entry.

1/1

APPROVED FOR RELEASE: 09/17/2001 CIA-RDP86-00513R002203030004-7"

"APPROVED FOR RELEASE: 09/17/2001 CIA-RDP86-00513R002203030004-7

Superalloys

USSR UDC 669.14.018.45-13:621.771.0.14:539.374

GUN, G. YA., POLUKHIN, P. I., SKUGOREV, V. S., GALKIN, A. N., ZHUCHIN, V. N., ISAYEV, V. A., KARLOV, S. V., and ZAPOROZHTSEV, YU. V., Moscow Institute of Steel and Alloys

"Investigation of the Resistance to Deformation and the Indicators of Plasticity of Heat-Resistant Alloys on a Nickel Base"

Moscow, Izvestiya VUZ, Chernaya Metallurgiya, No 11, 1973, pp 92-97

Abstract: In this article the authors cite the results of an investigation on resistance to deformation of heat-resistant alloys EP199, EP220, and EI929 on a nickel base in wide temperature range and deformation rate. They have constructed curves for the change in the indicators of plasticity in a broad range of temperature-rate conditions of deformation.

APPROVED FOR RELEASE: 09/17/2001 CIA-RDP86-00513R002203030004-7"

"APPROVED FOR RELEASE: 09/17/2001 CIA-RDP86-00513R002203030004-7

USSR

GUN, G. YA., et al., Izvestiya VUZ, Chernaya Metallurgiya, No 11, 1973, pp 92-97

The research was carried out because of the reality at the present time for knowledge of the behavior of materials with respect to resistance to deformation and indicators of plasticity in a range that varies broadly for the temperature and rate of deformation.

The first three illustrations depict curves of deformation resistance of the above alloys as a function of the size and amount of deformation at various temperatures. The fourth figure shows change in values of ψ and δ of these heat-resistant alloys as a function of temperature and rate of deformation.

The article contains four illustrations and 3 bibliographic references.

2/2

APPROVED FOR RELEASE: 09/17/2001 CIA-RDP86-00513R002203030004-7"

"APPROVED FOR RELEASE: 09/17/2001 CIA-RDP86-00513R002203030004-7

SKUKINA, I. S.

Radiation Biology

So: JPRS 54768
22 DEC 91

UDC 635.34:58.035.039

EFFECT OF ILLUMINATION ON THE RADIATION EFFECT IN LEAF CABBAGE AFTER IRRADIATION BY PROTONS AND GAMMA RAYS

All-Radiation Biology

[Article by I. S. Skukina, Yu. I. Sheydorov and V. N. Nekrasova, Moscow, Khimicheskaya Biologiya i Meditsina, Russian, Vol 5, No 5, 1971, submitted for publication 1 February 1971, pp 84-87]

Illumination conditions (light intensity, its spectral composition, duration of light and darkness) in many respects determine the interrelationship of biochemical processes transpiring in the plant organism (Zh. L. Ektanen; E. A. Titlyanov, et al.; N. P. Voskresenskaya), and also its reaction to external stimuli. In particular, this factor plays more than a little role in the nature of plant response to radiation. Accordingly, by creating appropriate illumination conditions it is possible to change the direction of physiological and biochemical processes in a plant in such a way as to increase their radiation tolerance and capacity for recovery.

For example, according to data published by V. N. Savin (1962), the cultivation of tomato plants from irradiated seeds with an illumination of 50,000 lux leads to an attenuation of the radiation effect in comparison with an illumination of 10,000 lux. A similar phenomenon was observed during the cultivation of radish plants from irradiated seeds (N. F. Batygin and V. N. Savin). At the same time, different illumination during the pre-radiation period (3,000-5,000 and 30,000 lux) exerted no influence on radiation effectiveness (N. F. Batygin and L. A. Misyuk). A shortening of the light period from 12 to 6 and 8 hours during the cultivation of perilla plants under luminescent lamps resulted in an increase in the effectiveness of gamma radiation (V. N. Savin, 1964). We found no data in the literature on the influence of illumination on the effectiveness of protons.

Since ionizing radiation constitutes the greatest danger for plants on space vehicles, it appears desirable to study different plant illumination conditions as a possible radioprotective factor.

APPROVED FOR RELEASE: 09/17/2001 CIA-RDP86-00513R002203030004-7"

"APPROVED FOR RELEASE: 09/17/2001 CIA-RDP86-00513R002203030004-7

USSR

PROTSNEKO, L. D., and SKUL'SKAYA, N. Ya., Zhurnal Obshchey Khimii, Sep 71, Vol 14, No 9, pp 1933-1937

were done on a SF-4 spectrophotometer in cells with a 9.99 mm path at concentrations, mostly, from $5 \cdot 10^{-5}$ to 10^{-4} g-mole/l in alcohol solutions.

2/2

USSR

APPROVED FOR RELEASE: 09/17/2001 CIA-RDP86-00513R002203

PROTSENKO, L. D., and SKUL'SKAYA, N. Ya.

UDC 546.185

"Ultra-Violet Spectra of Ethyleniminoderivatives of Phosphoric Acids"

Leningrad, Zhurnal Obshchey Khimii, Sep 71, Vol 14, No 9, pp 1933-1937

Abstract: The study covers absorption spectra of more than 60 ethylenimino-derivatives of phosphoric, thiophosphoric, and p-phenyldiphosphoric acids containing radicals of aromatic, aliphatic, heterocyclic amines and phenols, ethyleniminoderivatives of substituted phosphazobenzoyls and phosphazo-p-fluorobenzoyls. The repetition of optical properties among the various ethyleniminoderivatives of phosphoric acids indicates that the absorption in the UV spectral region is determined by aromatic and other substituents at the phosphorus atom; the remaining portion of the molecule hardly affects the spectrum. The nature of absorption by these substituents changes very little when passing from one molecule to another. The absorption maximum position is influenced by the nature of the bond between phosphorus and the substituent as well as by the chemical nature of the aromatic radical (in the case of aromatic substituents). The measurements

1/2

USSR

"APPROVED FOR RELEASE: 09/17/2001 CIA-RDP86-00513R002203030004-7

1/2 012 UNCLASSIFIED PROCESSING DATE--23OCT70

TITLE--ETHYLENIMINE DERIVATIVES OF PHOSPHORYLATED POLYHYDRIX ALCOHOLS -U-

AUTHOR-(03)-PROTSENKO, L.D., SKULSKAYA, N.YA., DERKACH, G.I.

COUNTRY OF INFO--USSR

SOURCE--ZH. OBSHCH. KHIM. 1970, 40(2), 464-6

DATE PUBLISHED-------70

SUBJECT AREAS--CHEMISTRY

TOPIC TAGS--IMINE, GLYCEROL, TRIETHYLAMINE, ORGANIC PHOSPHATE, ETHYL CARBAMATE, CHEMICAL DECOMPOSITION, CHEMICAL SYNTHESIS

CONTROL MARKING--NO RESTRICTIONS

DOCUMENT CLASS--UNCLASSIFIED

PROXY REEL/FRAME--1995/1468 STEP NO--UR/0079/70/040/002/0464/0466

CIRC ACCESSION NO--AP0116905

UNCLASSIFIED

APPROVED FOR RELEASE: 09/17/2001 CIA-RDP86-00513R002203030004-7"

"APPROVED FOR RELEASE: 09/17/2001 CIA-RDP86-00513R002203030004-7

2/2 012 UNCLASSIFIED

CIRC ACCESSION NO--AP0116905 PROCESSING DATE--23OCT70

ABSTRACT/EXTRACT--(U) GP-0- ABSTRACT. MIXING EQUIMOLAR AMTS. GLYCEROL IN DIOXANE WITH OCNPOCL SUB2 AT 20-5DEGREES, KEEPING THE MIXT. 20 HR AT ROOM TEMP., TREATING IT WITH 3.3 MOLES ETHYLENIMINE AND ET SUB3 N AND KEEPING THE WHOLE 1 HR GAVE 65PERCENT DIAZIRIDIDE OF 1,GLYCERYLURETHANE PHOSPHATE, ISOLATED AS DIPICRATE, DECOMPD. 139-40DEGREES. SIMILARLY WERE PREPD.: DIPICRATE OF 1,3,DIACETYL,2,GLYCERYL URETHANE PHOSPHATE, DECOMPD. 157-9DEGREES; 1,3,DITRITYL,2,GLYCERYL URETHANE PHOSPHATE, M. 115-17DEGREES; 1,2,3,GLYCERYL TRIURETHANE PHOSPHATE HEXAAZIRIDIDE, M. 40-2DEGREES; AND 1,6,DIBENZOYL,D,SORBITYL,2,3,4,6,TETRAURETHANE PHOSPHATE OCTAAZIRIDIDE, ISOLATED AS OCTAPICRATE, DECOMPD. 130-2DEGREES. REACTION OF 2,3,4,6,TETRA,O,ACETYL,D,GLUCOSE WITH (MEO) SUB2 PO(NCO) IN ET SUB2 O GAVE DI-ME 2,3,4,6,TETRA,O,ACETYL,D,GLUCOS,5,YL URETHANE PHOSPHATE, M. 95-7DEGREES.

UNCLASSIFIED

APPROVED FOR RELEASE: 09/17/2001 CIA-RDP86-00513R002203030004-7"

"APPROVED FOR RELEASE: 09/17/2001 CIA-RDP86-00513R002203030004-7

USSR UDC 547.26'118

PROTSENKO, L. D., and SKUL'SKAYA, N. YA.

"O,O'-Diaryl-N,N,N',N'-diethylenediamides and O-Aryl-N,N,N',N',N",N"-triethylenetriamides of p-Phenylenediphosphoric Acid"

Leningrad, Zhurnal Obshchey Khimii, Vol 40, No 5, May 70, pp 1021-1024

Abstract: Continuing their studies on the synthesis of ethylenimine derivatives of p-phenylenediphosphoric acid, the authors synthesized diethylenediamides and triethylenetriamides of p-phenylenediphosphoric acid containing phenol residues. These ethylenimine derivatives are formed by the reaction of p-phenylenediphosphoric acid tetrachloride with ethylenimine and then phenol in the presence of triethylamine.

1/1

APPROVED FOR RELEASE: 09/17/2001 CIA-RDP86-00513R002203030004-7"

"APPROVED FOR RELEASE: 09/17/2001 CIA-RDP86-00513R002203030004-7

USSR

UDC: 547.185

PROTSENKO, L. D., SKUL'SKAYA, N. YA., and DERKACH, G. I. (Deceased)

"Ethylenimine Derivatives of Phosphorylated Polyatomic Alcohols"

Leningrad, Zhurnal Obshchey Khimii, Vol 40, No 2, Feb 70, pp 464-466

Abstract: The article describes the synthesis of ethylenimine derivatives of phosphorylated glycerol and D-sorbitol. Isocyanatophosphoric acid dichloride reacts readily with polyatomic alcohols and their derivatives to give dichlorophosphonyl derivatives of polyatomic alcohols of various degrees of substitution, depending on the number of hydroxyl groups and the ratio of reagent amounts. Subsequent action of ethylenimine on these chlorine derivatives in the presence of triethylamine gives corresponding ethylenimine derivatives. Dialkyl esters of isocyanatophosphoric acids react with polyatomic alcohols analogously to isocyanatophosphoric acid dichloride.

1/1

APPROVED FOR RELEASE: 09/17/2001 CIA-RDP86-00513R002203030004-7"

"APPROVED FOR RELEASE: 09/17/2001 CIA-RDP86-00513R002203030004-7

1/2 030 UNCLASSIFIED PROCESSING DATE--13NOV70

TITLE--CHANGES IN THE DISTRIBUTION OF ALKALINE ELEMENTS IN ORGANS AND TISSUES IN ONTOGENETIC DEVELOPMENT OF GUINEA PIG AND ALBINO RAT -U-

AUTHOR-(04)-SKULSKIY, I.A., BAKLANOVA, S.M., BURDVINA, I.V., LEONTYEV, V.G.

COUNTRY OF INFO--USSR

SOURCE--ZHURNAL EVOLYUTSIONNOY BIOKHIMII I FIZIOLOGII, 1970. VOL 6. NR 1, PP 3-11

DATE PUBLISHED-------70

SUBJECT AREAS--BIOLOGICAL AND MEDICAL SCIENCES

TOPIC TAGS--ALKALI METAL, SODIUM, POTASSIUM, LIVER, HEART MUSCLE, RUBIDIUM, LIPID, GUINEA PIG, RAT, BRAIN, CESIUM

CONTROL MARKING--NO RESTRICTIONS

DOCUMENT CLASS--UNCLASSIFIED

PROXY REEL/FRAME--3005/0385 STEP NO--UR/0385/70/006/001/0003/0011

CIRC ACCESSION NO--AP0132614

UNCLASSIFIED

APPROVED FOR RELEASE: 09/17/2001 CIA-RDP86-00513R002203030004-7"

"APPROVED FOR RELEASE: 09/17/2001 CIA-RDP86-00513R002203030004-7

2/2 030 UNCLASSIFIED

CIRC ACCESSION NO--AP0132614 PROCESSING DATE--13NOV70

ABSTRACT/EXTRACT--(U) GP-0- ABSTRACT. THE GENERAL PATTERN OF THE DISTRIBUTION OF ALKALINE ELEMENTS IN ORGANS AND TISSUES WHICH IS REVEALED IN COMPARATIVE STUDIES ON VERTEBRATES, IS ALSO FOUND AT EARLY POSTNATAL STAGES OF MAMMALS. THESE FEATURES INCLUDE RELATIVELY CONSTANT VALUES OF NA-K RATIO IN THE LIVER AND CARDIAC MUSCLE, ELEVATED SELECTIVITY OF HEPATIC CELLS TO RUBIDIUM IONS, POSITIVE CORRELATION BETWEEN THE CONTENT OF LIPIDS AND SODIUM IN TISSUES. FORMERLY OBSERVED DIFFERENCES IN THE DISTRIBUTION OF ALKALINE ELEMENTS IN TISSUES OF ANIMALS FROM DIFFERENT CLASSES OF VERTEBRATES ARE FOUND SIMILARLY DURING ONTOGENETIC DEVELOPMENT OF GUINEA PIG AND RAT. DURING THE DEVELOPMENT OF FUNCTIONAL ACTIVITY OF MUSCLE TISSUE THE RATIO NA-K DECREASES. DIFFERENCES BETWEEN THE BRAIN AND OTHER TISSUES WITH RESPECT TO THEIR RUBIDIUM AND ESPECIALLY CAESIUM CONTENTS INCREASE. THIS PROCESS IN PRESUMABLY DUE TO THE INCREASE IN THE GLIAL MOLITY OF THE BRAIN WHICH IS RICH IN SODIUM AND LOW INRUBIDIUM AND CAESIUM. FACILITY: INSTITUTE OF EVOLUTIONARY PHYSIOLOGY AND BIOCHEMISTRY, USSR ACADEMY OF SCIENCES, LENINGRAD.

UNCLASSIFIED

APPROVED FOR RELEASE: 09/17/2001 CIA-RDP86-00513R002203030004-7"

"APPROVED FOR RELEASE: 09/17/2001 CIA-RDP86-00513R002203030004-7

1/2 014 UNCLASSIFIED PROCESSING DATE--30OCT70

TITLE--EXISTENCE OF A PLACENTAL BARRIER FOR CESIUM-137 -U-

AUTHOR-(04)-BAKLANOVA, S.M., BUROVINA, I.V., LEONTYEV, V.G., SKULSKIY, I.A.

COUNTRY OF INFO--USSR

SOURCE--RADIOBIOLOGIYA 1970, 10(1), 141-4

DATE PUBLISHED--------70

SUBJECT AREAS--NUCLEAR SCIENCE AND TECHNOLOGY, BIOLOGICAL AND MEDICAL SCIENCES

TOPIC TAGS--CESIUM ISOTOPE, HEART MUSCLE, WHITE RAT, GUINEA PIG, PLACENTAL TRANSPORT

CONTROL MARKING--NO RESTRICTIONS

DOCUMENT CLASS--UNCLASSIFIED

PROXY REEL/FRAME--3001/1836 STEP NO--UR/0205/70/010/001/0141/0144

CIRC ACCESSION NO--AP0127246

UNCLASSIFIED

APPROVED FOR RELEASE: 09/17/2001 CIA-RDP86-00513R002203030004-7"

"APPROVED FOR RELEASE: 09/17/2001 CIA-RDP86-00513R002203030004-7

CIRC ACCESSION NO--AP0127246 UNCLASSIFIED PROCESSING DATE--30OCT70

ABSTRACT/EXTRACT--(U) GP-0- ABSTRACT. THE TISSUES OF THE GASTROCNEMIUM MUSCLE AND HEART OF NEWBORN, 8 AND 21 DAY OLD, AND ADULT WHITE RATS, AND SKELETAL MUSCLE TISSUES OF NEWBORN, AND ADULT GUINEA PIGS, WERE STUDIED. DIFFERENCES IN THE CONTENT OF THE ALKALI ELEMENTS IN THE TISSUES DEPENDED ON THE DEGREE OF FUNCTIONAL MATURITY OF THE TISSUES AND WAS NA LARGER THAN K LARGER THAN RB LARGER THAN CS. THE ION SELECTIVE PROPERTIES OF THE TISSUES, ESP. DURING ONTOGENESIS DETD. THE PRIME137 CS DISTRIBUTION BETWEEN THE MOTHER AND OFFSPRING. FACILITY: INST. EVOL. FIZIOL. BIOKHIM. IM. SECHENOVA, LENINGRAD, USSR.

UNCLASSIFIED

APPROVED FOR RELEASE: 09/17/2001 CIA-RDP86-00513R002203030004-7"

"APPROVED FOR RELEASE: 09/17/2001 CIA-RDP86-00513R002203030004-7

2/2 014 UNCLASSIFIED PROCESSING DATE--30OCT70

CIRC ACCESSION NO--AP0124620

ABSTRACT/EXTRACT--(U) GP-0- ABSTRACT. THE PARTIAL VAPOR PRESSURES OF NH SUB4 NO SUB3 AND P SUB2 O SUB5 OVER NH SUB4 NO SUB3:NH SUB4 H SUB2 PO SUB4 MIXTS. (AT A WT. RATIO OF 58:42) CONTG. 3-35PERCENT H SUB2 O, AT 75-170DEGREES AND 200-760 TORR ARE NEGLIGIBLE AND THE TOTAL VAPOR PRESSURE P OVER THE SOLN. IS EQUAL TO THE PARTIAL PRESSURES OF NH SUB3 (WHICH HAS A MAX. OF 6 TORR AT 170DEGREES AND AN H SUB2 O CONCN. OF 3PERCENT) AND H SUB2 O; THE VALUE OF P AS A FUNCTION OF THE TEMP. T MAY BE CALCD. FROM THE EQUATION LOG P EQUALS A MINUS B-T, WHERE THE VALUE OF A INCREASES FROM 7.1 TO 8.05 WHEN THE H SUB2 O CONCN. IS INCREASED FROM 3 TO 35PERCENT AND B IS EQUAL TO 20000. THE B.P. OF THE MIXTS. AT 760 TORR INCREASES FROM 115.2 TO 195.9DEGREES (WHILE UNDER 200 TORR IT INCREASES FROM 75.9 TO 136.5DEGREES) WHEN THE H SUB2 O CONCN. IS REDUCED FROM 35 TO 2PERCENT.

APPROVED FOR RELEASE: 09/17/2001 CIA-RDP86-00513R002203030004-7"

"APPROVED FOR RELEASE: 09/17/2001 CIA-RDP86-00513R002203030004-7

1/2 029 UNCLASSIFIED PROCESSING DATE--18SEP70

TITLE--EFFECT OF CRYSTALLOGRAPHIC ORIENTATION ON THE OVER VOLTAGE OF HYDROGEN AND OXYGEN LIBERATION ON PLATINUM -U-

AUTHOR-(04)-PYSHNOGRAYEVA, I.I., SKUNDIN, A.M., VASILYEV, YU.B., BAGOTSKIY, V.S.

COUNTRY OF INFO--USSR

SOURCE--ELEKTROKHIMIYA 1970, 6(1), 142-6

DATE PUBLISHED--------70

SUBJECT AREAS--CHEMISTRY

TOPIC TAGS--PLATINUM ELECTROCHEMISTRY PROPERTY, SINGLE CRYSTAL PROPERTY, CRYSTAL ORIENTATION, GAS PROPERTY, HYDROGEN, OXYGEN, ACID CORROSION, SULFURIC ACID, ELECTRODE POTENTIAL

CONTROL MARKING--NO RESTRICTIONS

DOCUMENT CLASS--UNCLASSIFIED

PROXY REEL/FRAME--1987/0765 STEP NO--UR/0364/70/006/001/0142/0146

CIRC ACCESSION NO--AP0104211

UNCLASSIFIED

APPROVED FOR RELEASE: 09/17/2001 CIA-RDP86-00513R002203030004-7"

"APPROVED FOR RELEASE: 09/17/2001 CIA-RDP86-00513R002203030004-7

2/2 029 UNCLASSIFIED PROCESSING DATE--18SEP70

CIRC ACCESSION NO--AP0104211

ABSTRACT/EXTRACT--(U) GP-0- ABSTRACT. THE EVOLUTION OF H AND O IN N H SUB2 SO SUB4 SOLN. ON THE VARIOUS FACES OF A PT MONOCRYSTAL AND ON POLYCRYSTALS WAS STUDIED. THE EVOLUTION OF H WAS SIMILAR ON THE VARIOUS FACES OF THE MONO AND POLYCRYSTAL, HOWEVER, THE RATE OF THE PROCESS DECREASED IN THE FOLLOWING ORDER: FACE (111) IS GREATER THAN POLYCRYSTAL IS GREATER THAN FACE (100). EXCHANGE CURRENT COMPUTED PER 1 CM PRIME2 OF ACTUAL ELECTRODE SURFACE ALSO DECREASES IN THE SAME ORDER. IN GOING FROM FACE (111) TO FACE (100) THE MAGNITUDE OF EXCHANGE CURRENT CHANGES BY ALMOST 1 ORDER. THE ACTUAL ENERGY OF ACTIVATION REMAINED PRACTICALLY UNCHANGED BY CHANGING CRYSTALLOGRAPHIC ORIENTATION. THE EVOLUTION OF O DID NOT CHANGE BY CHANGING THE ORIENTATION OF THE CRYSTAL, HOWEVER THE RATE OF EVOLUTION AND THE EXCHANGE CURRENT DECREASED IN THE SAME SEQUENCE AS DID H. BY GOING FROM FACE (111) TO FACE (100) THE CURRENT DROPS FOR O BY A FACTOR OF 5. THUS, CATHODIC EVLOUTION OF H AND ANODIC EVOLUTION OF O DROPS CONSIDERABLY WHEN GOING FROM A TIGHTLY PACKED CRYSTAL FACE TO A FACE PACKED LESS TIGHTLY. A PT POLYCRYSTAL OCCUPIES A POSITION BETWEEN THESE 2 FACES.

UNCLASSIFIED

APPROVED FOR RELEASE: 09/17/2001 CIA-RDP86-00513R002203030004-7"

"APPROVED FOR RELEASE: 09/17/2001 CIA-RDP86-00513R002203030004-7

Petroleum Processing Technology

USSR

UDC 665.521.5:66.022.37:546.47

RAVIKOVICH, A. M., BORZNCHEVSKIY, S. B., PETYAKINA, YE. I., and SKUNDIN, G. I.,
All Union Scientific Research Institute of Petroleum Industry

"Antiwear Additives for Lubricating Oils Containing Zinc, Nitrogen, and Phosphorus"

Moscow, Khimiya i Tekhnologiya Topliv i Masel, No 2, 1972, pp 47-50

Abstract: AFO -- a new antiwear oil additive containing zinc, nitrogen and phosphorus elements has been produced from the extract of residual oils of sulfurous petroleum, after preliminary purification with propane. AFO has been shown to possess high antiwear and antioxidation properties, better than the commercial EFO. It is soluble in mineral oils of different viscosity, producing no sediments during storage at low temperature. The comparative tests carried out on models showed that the contact strength of drive gear teeth lubricated with TS-14.5 oil containing AFO is greater than the strength of the driving gear treated with TS-14.5 oil containing the EFO additive.

1/1

APPROVED FOR RELEASE: 09/17/2001 CIA-RDP86-00513R002203030004-7"

"APPROVED FOR RELEASE: 09/17/2001 CIA-RDP86-00513R002203030004-7

USSR UDC: 621.373.42

SKUPOY, V. F.

"Selective Characteristics of Self-Excited Oscillators With an Arbitrary Quality Factor"

Moscow, Radiotekhnika, No 7, 1970, pp 58-61

Abstract: The author analyzes the synchronization of a self-excited oscillator with an arbitrary quality factor using a narrow-band frequency modulated signal. The results show that a decrease in the quality factor of a synchronized self-excited oscillator which is coupled to the channel of a narrow-band frequency modulated signal can be effective in a number of instances in raising resistance to interference. This is significant since other methods such as negative feed-back with respect to frequency and the tracking contour are not applicable. The original article has two figures, ten formulas, and ten bibliographic entries.

1/1

APPROVED FOR RELEASE: 09/17/2001 CIA-RDP86-00513R002203030004-7"

"APPROVED FOR RELEASE: 09/17/2001 CIA-RDP86-00513R002203030004-7

USSR

Ion Exchange

FEDOTOV, N. A., URUSOV, K. KH., and SKURATNIK, YA. B., Scientific Physical-Chemical Research Institute Imeni L. YA. Karpov, Moscow

UDC 533.66.063

"Determination of the Selfdiffusion Coefficient of Water in Ion Exchange Membrane Electrolytes"

Moscow, Zhurnal Fizicheskoy Khimii, Vol 46, No 11, Nov 72, pp 2842-2844

Abstract: The study was aimed at obtaining data on the "mobility" of water in a membrane electrolyte under conditions excluding its direct transfer together with ions under the influence of the electric field. The methodology was developed for the determination of the selfdiffusion coefficient of water in membrane electrolytes using triturated water, these data being reported for a series of heterogeneous membranes with varying content of the cation exchange resin KU-2-8 and fluoroplastics 42-L, as well as for a homogeneous membrane. It has been noted that the coefficient of selfdiffusion increases rapidly with an increased content of the cation exchange resin in the membranes, eventually approaching the value characteristic of the homogeneous membranes.

1/1

APPROVED FOR RELEASE: 09/17/2001 CIA-RDP86-00513R002203030004-7"

"APPROVED FOR RELEASE: 09/17/2001 CIA-RDP86-00513R002203030004-7

Transformation and Structure

USSR UDC 669.27.017

VEDERNIKOVA, V. A., MIL'MAN, Yu. V., POSTNOV, L. M., POPOV, A. P., SLENZAK, G. YE., TREFILOV, V. I., and SHUMILOV, I. M., Institute of Metal Physics, Academy of Sciences, Ukr SSR

"Structural Changes During Annealing of a Precipitation Hardened Tungsten Alloy"

Kiev, Metallofizika, No 40, 1972, pp 45-49

Abstract: Translucent electron microscopy, metallography, and diffraction line width measurements were used to study the structural changes resulting from the annealing of deformed tungsten in which 0.2% ZrC had been added during melting. At up to 1800°C a dispersed cellular structure is preserved in the alloy along with a structure stabilized by precipitations of a second phase. These were identified as ZrC in an x-ray investigation of the deposit obtained during electrochemical dissolving of the tungsten. In isolated sections of the alloy, with an increased density of second-phase particles, the cellular structure was preserved even after annealing at 2340°C. Increased recrystallization temperature is accompanied by increased heat resistance. 4 figures, 9 bibliographic references.

1/1

APPROVED FOR RELEASE: 09/17/2001 CIA-RDP86-00513R002203030004-7"

"APPROVED FOR RELEASE: 09/17/2001 CIA-RDP86-00513R002203030004-7

1/2 013 UNCLASSIFIED PROCESSING DATE--27NOV70

TITLE--APPARATUS FOR DETERMINING VAPOR PRESSURE AND BOILING POINTS OF LIQUIDS -U-

AUTHOR-(03)-VARUSHCHENKO, R.M., GALCHENKO, G.L., SKURATOV, S.M.

COUNTRY OF INFO--USSR

SOURCE--ZH. FIZ. KHIM. 1970, 44(1), 283-5

DATE PUBLISHED--------70

S

SUBJECT AREAS--PHYSICS, CHEMISTRY

TOPIC TAGS--CHEMICAL LABORATORY APPARATUS, VAPOR PRESSURE, CHEMICAL PURITY, BOILING

CONTROL MARKING--NO RESTRICTIONS

DOCUMENT CLASS--UNCLASSIFIED

PROXY REEL/FRAME--1994/1004 STEP NO--UR/0076/70/044/001/0283/0285

CIRC ACCESSION NO--AP0115025

UNCLASSIFIED

APPROVED FOR RELEASE: 09/17/2001 CIA-RDP86-00513R002203030004-7"

"APPROVED FOR RELEASE: 09/17/2001 CIA-RDP86-00513R002203030004-7

2/2 013 UNCLASSIFIED PROCESSING DATE--27NOV70

CIRC ACCESSION NO--AP0115025

ABSTRACT/EXTRACT--(U) GP-0- ABSTRACT. THE EBULLIOSCOPIC METHOD WAS USED FOR DETG. THE VAPOR PRESSURE AND B.PS. OF LIQS. AT 40-200DEGREES AND 30-660 MM HG. THE ADVANTAGE OF THE METHOD IS THE MEASUREMENT OF THE DEGREE OF PURITY OF LIQ. COMPDS. ACCORDING TO THEIR B.PS. THE APP., WHICH INCLUDES A DIFFERENTIAL EBULLIOSCOPE, A HG MANOMETER, AN ELECTROMAGNETIC VALVE, AND A CYLINDER OF N IS DESCRIBED IN DETAIL. THE PRECISION OF THE MEASUREMENT WAS PLUS OR MINUS 0.004DEGREES AND THE MAX. DIFFERENCE FOR THE PRESSURE MEASUREMENT WAS WITHIN 0.02-0.09 MM HG. METHYLCYCLOHEXANE AND N DECANE WERE USED AS TEST COMPDS. AND THE RESULTS WERE VERIFIED BY CHROMATOG. FACILITY: MOSK. GOS. UNIV. IM. LOMONOSOVA, MOSCOW, USSR.

UNCLASSIFIED

APPROVED FOR RELEASE: 09/17/2001 CIA-RDP86-00513R002203030004-7"

"APPROVED FOR RELEASE: 09/17/2001 CIA-RDP86-00513R002203030004-7

1/2 012 UNCLASSIFIED

TITLE--SOME OBSERVATIONS ON THE EFFECTIVENESS OF MONOMYCIN IN THERAPY OF GONORRHEA IN MEN -U- PROCESSING DATE--13NOV70

AUTHOR-(05)-GRIGORYEV, V.YE., POTAPNEV, F.V., SKURATOVICH, A.A., GRACHEV, YU.I., VOSKRESENSKAYA, G.A.

COUNTRY OF INFO--USSR

SOURCE--VESTNIK DERMATOLOGII I VENEROLOGII, 1970, NR 4, PP 59-62

DATE PUBLISHED--------70

SUBJECT AREAS--BIOLOGICAL AND MEDICAL SCIENCES

TOPIC TAGS--ANTIBIOTIC, VENEREAL DISEASE, MONOMYCIN

CONTROL MARKING--NO RESTRICTIONS

DOCUMENT CLASS--UNCLASSIFIED

PROXY REEL/FRAME--1990/0936 STEP NO--UR/0206/70/000/004/0059/0062

CIRC ACCESSION NO--AP0109093

UNCLASSIFIED

APPROVED FOR RELEASE: 09/17/2001 CIA-RDP86-00513R002203030004-7"

"APPROVED FOR RELEASE: 09/17/2001 CIA-RDP86-00513R002203030004-7

2/2 012 UNCLASSIFIED

CIRC ACCESSION NO--AP0109093 PROCESSING DATE--13NOV70

ABSTRACT/EXTRACT--(U) GP-0- ABSTRACT. THE EFFECTIVENESS OF MONOMYCIN IN THERACY CF GCNORRHEAL INFECTION IN 145 MEN WAS STUDIED. THE DRUG WAS INJECTED INTRAMUSCULARLY IN A DOSE OF 500,000 UNITS EVERY 10-12 HOURS. PATIENTS WITH ACUTE AND SUBACUTE GONORRHEAL URETHRITIS RECEIVED A COURSE DOSE OF MONOMYCIN OF 2,000,000 UNITS. FOR PATIENTS WITH COMPLICATED AND CHRONIC FORMS OF GONORRHEAL INFECTION COURSE DOSES WERE INCREASED TO 3,500,000-4,000,000 UNITS. GONOCOCCI DISAPPEARED FROM THE SECRETE IN THE MAJORITY OF PATIENTS WITHIN 6-7 HOURS. ETIOLOGICAL CURE AFTER MONOMYCIN THERAPY WAS ACHIEVED IN 96.6PERCENT OF PATIENTS.

FACILITY: OTDEL GONOREI TSENTRAL'NOGO N I KOZHNO VENEROLOGICHESKOGO INSTITUTA MINISTERSTVA ZDRAVOOKHRANENIYA SSSR, MOSCOW.

UNCLASSIFIED

APPROVED FOR RELEASE: 09/17/2001 CIA-RDP86-00513R002203030004-7"

"APPROVED FOR RELEASE: 09/17/2001 CIA-RDP86-00513R002203030004-7

1/2 026 UNCLASSIFIED PROCESSING DATE--20NOV70

TITLE--ROLE OF SOME METABOLITES IN THE ENERGY SUPPLY OF THE THYROTOXIC HEART -U-

AUTHOR-(03)-GOLBERS, L., KANDROR, V.I., SKURATOVSKAYA, L.N.

COUNTRY OF INFO--USSR

SOURCE--PROBL. ENDOKRINOL. 1970, 16(3), 77-80

DATE PUBLISHED--------70

SUBJECT AREAS--BIOLOGICAL AND MEDICAL SCIENCES

TOPIC TAGS--ENDOCRINE SYSTEM DISEASE, THYROID GLAND, BLOOD CHEMISTRY, FATTY ACID, KETONE, MYOCARDIUM, LIPID METABOLISM, AMINO ACID METABOLISM

CONTROL MARKING--NO RESTRICTIONS

DOCUMENT CLASS--UNCLASSIFIED

PROXY REEL/FRAME--3096/0278 STEP NO--UR/0502/70/016/003/0077/0080

CIRC ACCESSION NO--AP0134083

UNCLASSIFIED

APPROVED FOR RELEASE: 09/17/2001 CIA-RDP86-00513R002203030004-7"

"APPROVED FOR RELEASE: 09/17/2001 CIA-RDP86-00513R002203030004-7

2/2 026 UNCLASSIFIED

CIRC ACCESSION NO--AP0134083 PROCESSING DATE--20NOV70

ABSTRACT/EXTRACT--(U) GP-0- ABSTRACT. THYROIDIN TOXICOSIS IN CATS INCREASED THE CONTENT OF NONESTERIFIED FATTY ACIDS, KETONE BODIES, AND AMINO N IN THE ARTERIAL BLOOD, INCREASED CONSUMPTION OF NONESTERIFIED FATTY ACIDS, OXIDN, OF KETONE BODIES, AND LIPOLYTIC ACTIVITY IN THE MYOCARDIUM, AND METABOLISM OF NONESTERIFIED FATTY ACIDS IN O CONSUMPTION BY THE HEART. AMINO ACIDS WERE NOT OXIDIZED IN THE MYOCARDIUM TO ANY SIGNIFICANT EXTENT. FACILITY: LAB. PATOL. FIZIO., INST. EKSP. ENDOKRINOL. KHIM, GORMONOV, MOSCOW, USSR.

UNCLASSIFIED

APPROVED FOR RELEASE: 09/17/2001 CIA-RDP86-00513R002203030004-7"

"APPROVED FOR RELEASE: 09/17/2001 CIA-RDP86-00513R002203030004-7

1/2 008 UNCLASSIFIED PROCESSING DATE--27NOV70

TITLE--EFFECT OF A PRIMARY AMINE IN THE REACTION OF DICYCLOHEXYLCARBODIIMIDE WITH CARBOXYLIC ACIDS -U-

AUTHOR-(03)-MIRONOVA, D.F., DVORKO, G.F., SKURATOVSKAYA, T.N.

COUNTRY OF INFO--USSR

SOURCE--UKR. KHIM. ZH. 1970, 36(2), 190-1

DATE PUBLISHED--------70

SUBJECT AREAS--CHEMISTRY

TOPIC TAGS--PRIMARY AMINE, CYCLIC GROUP, IMIDE, CARBOXYLIC ACID, UREA DERIVATIVE

CONTROL MARKING--NO RESTRICTIONS

DOCUMENT CLASS--UNCLASSIFIED

PROXY REEL/FRAME--2000/2137 STEP NO--UR/0073/70/036/002/0190/0191

CIRC ACCESSION NO--AP0125720

UNCLASSIFIED

APPROVED FOR RELEASE: 09/17/2001 CIA-RDP86-00513R002203030004-7"

"APPROVED FOR RELEASE: 09/17/2001 CIA-RDP86-00513R002203030004-7

2/2 008

UNCLASSIFIED

CIRC ACCESSION NO--AP0125720 PROCESSING DATE--27NOV70

ABSTRACT/EXTRACT--(U) GP-0- ABSTRACT. FROM THE REACTION OF DICYCLOHEXYLCARBODIIMIDE WITH HOAC IN THF CONTG. PHNH SUB2 OF P-MEC SUB6 H SUB4 NH SUB2, IT IS POSSIBLE TO ISOLATE C SUB6 H SUB11 NHCON ACC SUB6 H SUB11 (I), NOT ISOLATED FROM THE REACTION IN CCL SUB4; NOR IS THE ANALOGOUS ACYLUREA ISOLATED WHEN CLCH SUB2 SO SUB2 H IS USED. THE RATE OF AMIDE FORMATION FROM CLCH SUB2 CO SUB2 H DOES NOT DEPEND ON CONCN. OR THE NATURE OF THE AMINE, BUT INCREASES FOR REACTION WITH HOAC ON ADDN. OF A PRIMARY AMINE. THIS IS ATTRIBUTED TO A CYCLIC TRANSITION STATE IN WHICH THE AMINE FURNISHES A PROTON FOR FORMATION OF I WHICH FORMS THE AMIDE IN A LATER STAGE OF THE REACTION.

FACILITY: INST. ORG. KHIM., KIEV, USSR.

UNCLASSIFIED

APPROVED FOR RELEASE: 09/17/2001 CIA-RDP86-00513R002203030004-7"

"APPROVED FOR RELEASE: 09/17/2001 CIA-RDP86-00513R002203030004-7

USSR

UDC 616-036.882-08:612.08

SKURATOVS'KIY, A. S., and GUBATYUK, P. V., Department of Hypoxia Conditions, Institute of Physiology imeni O. O. Bogomolets, Ukrainian SSR Academy of Sciences, Kiev

"Artificial Respiration Device in a Pressure Chamber at Elevated Gas Pressure in the Reanimation of an Organism Dead as a Result of Rapid Decompression"

Kiev, Fiziologichniy Zhurnal, Vol 17, No 2, Mar/Apr 71, pp 276-277

Translation: In developing methods of reanimating an organism which has died as a result of rapid decompression, the complexity of reanimation of an organism in a state of clinical death of this type is manifested by the fact that as a result of the rapid drop of atmospheric pressure, along with the development of acute hypoxia of the entire organism, large numbers of gas emboli are formed in the tissues and blood vessels; these emboli after the reanimation may block the supply of blood to vitally important organs (brain stem, coronary blood vessels, and others) causing the death of the organism.

To alleviate the hypoxia and dissolve the airemboli, all reanimation measures were applied by us in a pressure chamber under conditions of elevated air

1/6

APPROVED FOR RELEASE: 09/17/2001 CIA-RDP86-00513R002203030004-7"

"APPROVED FOR RELEASE: 09/17/2001 CIA-RDP86-00513R002203030004-7

USSR

SKURATOVS'KIY, A. S., and GUBATYUK, P. V., Fiziologichniy Zhurnal, Vol 17, No 2, Mar/Apr 71, pp 276-277

pressure (2-2.5 absolute atmospheres), with the air gradually being replaced by pure oxygen.

A special device for the administration of artificial respiration named by us "Automatic Regulator of Artificial Respiration" was designed. It consists of a cuff attached to the chest of the animal prior to its being placed in the chamber, and an electromechanical regulator of inspiration and expiration. A rubber cuff of a Riva-Rochi type of apparatus covered with canvas is the base. The top of the cuff is secured by a metal strap in order that the pressure created by the air can act on the chest of the animal, inducing artificial respiration. Schematic drawings of the electromechanical regulator are presented in illustrations 1 and 2.

Air from the cylinder (4) is supplied to the cuff (1) through a T-joint (5); one of the latter's outlets passes through the cover of the chamber (6) and is connected with the rubber hose (8) of the cuff. The filling of the cuff with air and expelling of the air from the cuff is accomplished with the help of two SKR-2 solenoid valves which alternately are switched on and off

2/6

APPROVED FOR RELEASE: 09/17/2001 CIA-RDP86-00513R002203030004-7"

"APPROVED FOR RELEASE: 09/17/2001 CIA-RDP86-00513R002203030004-7

USSR

SKURATOVS'KIY, A. S., and GUBATYUK, P. V., Fiziologichniy Zhurnal, Vol 17, No 2, Mar/Apr 71, pp 276-277

by an electromechanical timing relay prepared from an SD-2 motor (10) and RPT-100 relay. (9). An organic glass disk is mounted on the shaft of the motor; attached to it is a brass wheel (11) with cut out sections. The contact brushes glide over the wheel when it is in rotation. One of the brushes glides over the rim of the brass wheel, being in constant contact with the brass disk. The second brush, shifted to the center of the wheel, breaks its contact with the brass disk in the areas of the cut out sections, thereby closing the electric circuit of which the RPT-100 relay is a component.

To begin with, the relay when switched on automatically closes the circuit of valve (2). The valve opens and the air from the cylinder (4) passes through outlet (7) of T-joint (5) filling the cuff. The cuff expands and exerting pressure on the chest of the animal, induces expiration. The relay is then switched off activating the circuit of valve (2) and closing the circuit of valve (3). Valve (3) opens, allowing passage of the air expelled from the cuff. The cuff collapses, the chest of the animal expands and

3/6

APPROVED FOR RELEASE: 09/17/2001 CIA-RDP86-00513R002203030004-7"

"APPROVED FOR RELEASE: 09/17/2001 CIA-RDP86-00513R002203030004-7

USSR

SKURATOVS'KIY, A. S., and GUBATYUK, P. V., Fiziologichniy Zhurnal, Vol 17, No 2, Mar/Apr 71, pp 276-277

induces inspiration. The essential filling of the cuff with air is regulated with the help of the cylinder reducer and changes in the size of the air clearance gaps of the solenoid valves. The frequency with which pressure is exerted on the chest of the animal is regulated by the number of cut out sections on the brass disk which is attached to the motor shaft.

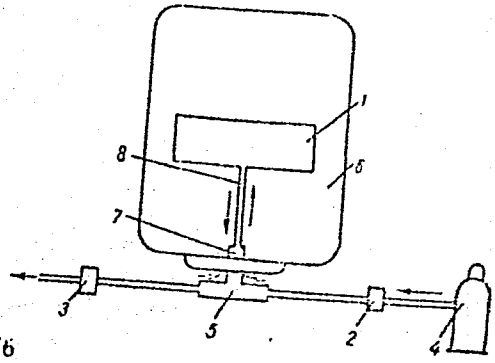

Illustration 1. Mechanical scheme of the device for artificial respiration in a pressure chamber

4/6

APPROVED FOR RELEASE: 09/17/2001 CIA-RDP86-00513R002203030004-7"