"APPROVED FOR RELEASE: 09/01/2001 CIA-RDP86-00513R002203310017-2

USSR

UDC 621.385.832.82:621.317.616

DENBNOVETSKIY, S. V., TISHCHENKO, F. I.

"A Cathode-Ray Memory Tube With Barrier Grid as an Electronic Circuit Element"

Avtomatiz. proyektir. v elektron. Resp. mezhved. nauch.-tekhn. sb. (Design Automation in Electronics. Republic Interdepartmental Scientific and Technical Collection), vyp. 2, Kiev, "Tekhnika", 1970, pp 151-155

Abstract: The cathode-ray memory tube with barrier grid is represented as a nonautonomous multiterminal network to which a generalized conductivity matrix Y is ascribed. The authors find the equivalent parameters of the tube which enable investigating its properties as a circuit element. Three illustrations, bibliography of three titles.

1/1

APPROVED FOR RELEASE: 09/01/2001 CIA-RDP86-00513R002203310017-2"

"APPROVED FOR RELEASE: 09/01/2001 CIA-RDP86-00513R002203310017-2

USSR

UDC 612.791-7

KALINA, V. K., TERESHCHENKO, Yu. I., and TISHCHENKO, F. M., Chair of Medical Radiology, Kiev Institute of Advanced Training for Physicians, Kiev

"A Device for Measuring the Amount of Oxygen Absorbed by Different Parts of the Human Skin"

Kiev, Vrachebnoye Delo, No 6, Jun 71, pp 119-122

Abstract: An apparatus for determining the amount of O_2 that is absorbed by different areas of the human skin has been developed, which comprises 1) an electrolytic O_2 compensator consisting of a vessel filled with a $CuSO_4$ solution and equipped with two electrodes, 2) a gas-exchange vessel with an absorber for CO_2 and H_2O, 3) a liquid-filled U-shaped manometer with a floating contact, and 4) an electronic recorder, a power source, integrating unit, and monitoring indicators.

1/4

APPROVED FOR RELEASE: 09/01/2001 CIA-RDP86-00513R002203310017-2"

"APPROVED FOR RELEASE: 09/01/2001 CIA-RDP86-00513R002203310017-2

USSR

KALINA, V. K., et al., Vrachebnoye Delo, No 6, Jun 71, pp 119-122

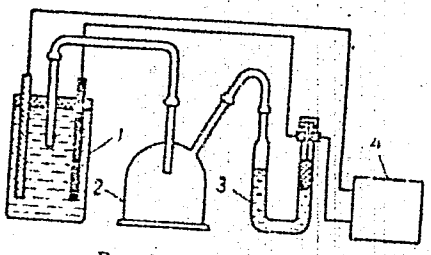

Рис. 1.

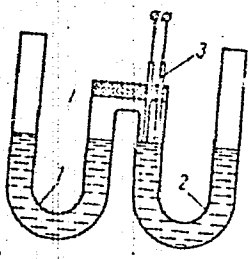

Рис. 3.

2/4

APPROVED FOR RELEASE: 09/01/2001 CIA-RDP86-00513R002203310017-2"

"APPROVED FOR RELEASE: 09/01/2001 CIA-RDP86-00513R002203310017-2

USSR

KALINA, V. K., et al., Vrachebnoye Delo, No 6, Jun 71, pp 119-122

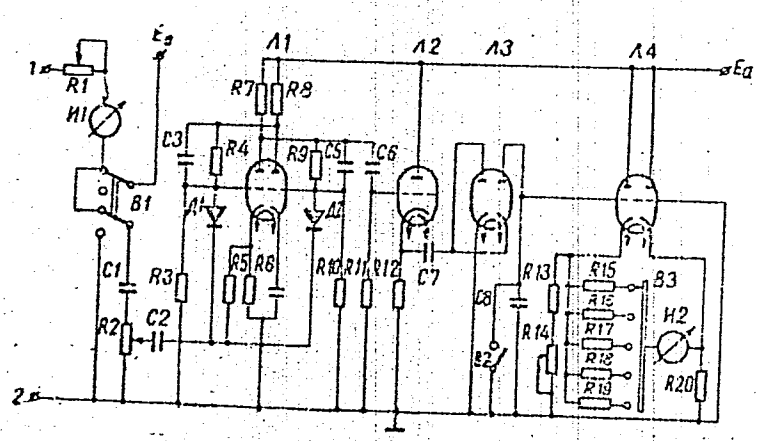

Рис. 2.

3/4

APPROVED FOR RELEASE: 09/01/2001 CIA-RDP86-00513R002203310017-2"

"APPROVED FOR RELEASE: 09/01/2001 CIA-RDP86-00513R002203310017-2

USSR

KALINA, V. K., et al., Vrachebnoye Delo, No 6, Jun 71, pp 119-122

After a certain volume of O_2 has been absorbed by the skin, the pressure in (2), which has been initially equal to that in (1), decreases, activating (3) with the result that the floating contact in one of the legs of (3) is lowered and current passes through (1), developing O_2 that flows into (2). Current passes through (1) until an equal pressure in (2) and (1) is restored. When more O_2 has been absorbed from (2) by the skin, the cycle is repeated. The amount of current that passes through (1), which is equivalent to the amount of O_2 absorbed by the skin, is measured and recorded. At a consumption of O_2 less than 5-10 cm^3, a more precise electrolytic contact is used that consists of a 2d U-tube filled with a liquid electrolyte that rises in one of the legs of the tube when the pressure in (2) drops, unbalancing the liquid levels in the first U-tube. The rising liquid in the 2d tube establishes a contact between two electrodes that are located in the leg of the U-tube. Application of the apparatus on 20 healthy persons yielded satisfactory results.

4/4

APPROVED FOR RELEASE: 09/01/2001 CIA-RDP86-00513R002203310017-2"

"APPROVED FOR RELEASE: 09/01/2001 CIA-RDP86-00513R002203310017-2

Acc. Nr: AP0048939 Abstracting Service: CHEMICAL ABST. 5170 Ref. Code: UR0079

99850y Acid-base equilibriums of tetrahydroaminohydroxyfuranones in water-alcohol solutions. Gruchenkov, R. G.; Skorokhod, O. R.; Tishchenko, I. G. (Belorus. Gos. Univ. im. Lenina, Minsk, USSR). *Zh. Obshch. Khim.* 1976, 46(1), 171-6 (Russ). Acid-base equil. was studied of I (R = piperidino, NMe_2, or NEt_2). by following the changes in absorption spectra of I at pH 1.78-6.74. All 6 possible structural forms of I take part in the equil. involving H^+ transfers and tabulation was made for I at various pH in terms of distribution of the co-

(I)

present forms under the acid-base equil. conditions. The values of the estd. equil. consts. for these forms increase in order $C_5H_{10}N$, Me_2N, Et_2N and were tabulated for pH 2-11.

G. M. Kosolapoff

1/1

REEL/FRAME
19800711

APPROVED FOR RELEASE: 09/01/2001 CIA-RDP86-00513R002203310017-2"

"APPROVED FOR RELEASE: 09/01/2001 CIA-RDP86-00513R002203310017-2

Television

USSR UDC: 681.14.523.8

BRAUDE, G. V., BONCH-BRUYEVICH, A. M., GEL'FANDBEYN, Ya. A., GULIN, I. N., KRIVOSHEYEV, M. I., MIRSKIY, G. Ya., TISHCHENKO, I. M., TEL'NYKH, O. A., KHESIN, A. Ya.

"A Television Device for Determining the Coordinates of Point Objects"

Moscow, Otkrytiya, Izobreteniya, Promyshlennyye Obraztsy, Tovarnyye Znaki, No 26, Sep 71, Author's Certificate No 313210, p 165

Translation: This Author's Certificate introduces a television device for determining the coordinates of point objects. The device contains a television transmitting tube with memory, an output scanning unit, a video signal processing unit, an erasure unit, a synchronizing unit, a cadence pulse generator, an optical shutter, and a data input module. As a distinguishing feature of the patent, the accuracy of coordinate determination is improved by tying series-connected horizontal and vertical interrogation counters to the output of the cadence pulse generator. The counter outputs are connected through shaping matrixes for horizontal and vertical deflection to the input of the output scanning unit. At the same time, a second output of the vertical interrogation counter is connected through a decoder to the data input module.

1/1

APPROVED FOR RELEASE: 09/01/2001 CIA-RDP86-00513R002203310017-2"

"APPROVED FOR RELEASE: 09/01/2001 CIA-RDP86-00513R002203310017-2

1/2 C12 UNCLASSIFIED

TITLE--OPERATION OF MIXED ACTION FILTERS -U- PROCESSING DATE--20NOV70

AUTHOR-(03)-SHVETSOVA, V.P., TISHCHENKO, N.D., BELOUSOVA, V.V.

COUNTRY OF INFO--USSR

SOURCE--ELEK. STA. 1970, 41(3), 22-4

DATE PUBLISHED--------70

SUBJECT AREAS--CHEMISTRY

TOPIC TAGS--ION EXCHANGE RESIN, FILTRATION, CHEMICAL REACTION RATE

CONTROL MARKING--NO RESTRICTIONS

DOCUMENT CLASS--UNCLASSIFIED

PROXY REEL/FRAME--3006/1297 STEP NO--UR/0104/70/041/003/0022/0024

CIRC ACCESSION NO--AP0134971

UNCLASSIFIED

APPROVED FOR RELEASE: 09/01/2001 CIA-RDP86-00513R002203310017-2"

"APPROVED FOR RELEASE: 09/01/2001 CIA-RDP86-00513R002203310017-2

2/2 012

UNCLASSIFIED

CIRC ACCESSION NO--AP0134971 PROCESSING DATE--20NOV70

ABSTRACT/EXTRACT--(U) GP-0- ABSTRACT. ION EXCHANGE FILTERS WITH REGENERATION OF ION EXCHANGER RESINS AFTER LEAVING THE FILTER ARE MORE ECONOMICAL THAN THOSE WITH INTERNAL REGENERATION. THE CONSUMPTION OF REAGENTS AND CONDENSATES IS LESS FOR THE FORMER FILTERS IN VIEW OF BETTER REGENERATION CONDITIONS WHICH IS THE CAUSE OF INCREASED EXCHANGE OPERATING CAPACITY. THE MAX. ADMISSIBLE FILTRATION RATE OF FILTERS WITH INTERNAL REGENERATION IS 50M-HR; FOR FILTERS WITH EXTERNAL REGENERATION THIS RATE MAY BE HIGHER. LOSSES IN ION EXCHANGER WITH EXTERNAL REGENERATION ARE NOT GREATER THAN THOSE WITH INTERNAL REGENERATION FILTERS.

UNCLASSIFIED

APPROVED FOR RELEASE: 09/01/2001 CIA-RDP86-00513R002203310017-2"

"APPROVED FOR RELEASE: 09/01/2001 CIA-RDP86-00513R002203310017-2

Automatic Control Instruments & Systems

USSR

UDC 621.318.001.2 + 621.382.001.2

TISHCHENKO, N. M.

Proyektirovaniye Magnitnykh i Poluprovodnikovykh Elementov Avtomatiki (The Design of Magnetic and Semiconductor Elements for Automatic Equipment), Moscow, "Energiya," 1970, 639 pp, Summary p 2, Table of Contents pp 635-639

Translation of Summary and Table of Contents: The book sets forth questions in the theory and design of the principal types of ferromagnetic and semiconductor elements used in automatic control and monitoring systems.

The first part of the book presents information necessary for understanding the operating principles and principal characteristics of elements. Considerable attention is given to quantitative relations enabling the static and dynamic characteristics of elements to be evaluated.

The second part gives methods of calculation, as well as necessary data on the design of widely used elements. The calculation methods are illustrated by examples which make it possible for the reader both to learn the calculation sequence and to determine the order of calculated values.

1/17

APPROVED FOR RELEASE: 09/01/2001 CIA-RDP86-00513R002203310017-2"

"APPROVED FOR RELEASE: 09/01/2001 CIA-RDP86-00513R002203310017-2

USSR

TISHCHENKO, N. M., Proyektirovaniye Magnitnykh i Poluprovodnikovykh Elementov Avtomatiki, Moscow, "Energiya," 1970, 639 pp

The book is intended for a wide circle of specialists in the field of automatic control systems and equipment, as well as students in the corresponding specialties.

TABLE OF CONTENTS

Page

PREFACE..... 3

INTRODUCTION..... 5

Part 1. CONSTRUCTION PRINCIPLES AND BASIC CHARACTERISTICS OF FERROMAGNETIC AND SEMICONDUCTOR ELEMENTS OF AUTOMATIC EQUIPMENT

2/17

APPROVED FOR RELEASE: 09/01/2001 CIA-RDP86-00513R002203310017-2"

"APPROVED FOR RELEASE: 09/01/2001 CIA-RDP86-00513R002203310017-2

USSR

TISHCHENKO, N. M., Proyektirovaniye Magnitnykh i Poluprovodnikovykh Elementov Avtomatiki, Moscow, "Energiya," 1970, 639 pp

		Page
Chapter 1.	GENERAL CHARACTERISTICS OF AUTOMATIC EQUIPMENT ELEMENTS	10
1-1.	Classification of Automatic Equipment Elements	10
1-2.	Static Characteristics	12
1-3.	Analytic Representation of Static Characteristics of Automatic Equipment elements	14
1-4.	Dynamic Characteristics	17
1-5.	Stability Characteristics	29
1-6.	Reliability Characteristics	34
1-7.	Weight and Size Characteristics	41
1-8.	Energy Characteristics	44
1-9.	Characteristics of Magnetic Materials	47
1-10.	Ferromagnetic Cores	56
1-11.	Characteristics of Simultaneous Magnetization by a Variable and a Constant Magnetic Field	59

3/17

APPROVED FOR RELEASE: 09/01/2001 CIA-RDP86-00513R002203310017-2"

"APPROVED FOR RELEASE: 09/01/2001 CIA-RDP86-00513R002203310017-2

USSR

TISHCHENKO, N. M., Proyektirovaniye Magnitnykh i Poluprovodnikovykh Elementov Avtomatiki, Moscow, "Energiya," 1970, 639 pp

		Page
1-12.	Approximation of Characteristics of Simultaneous Magnetization	64
1-13.	Family of Characteristics of Simultaneous Magnetization by Two Fields of Different Frequency	68
1-14.	Semiconductor Diodes and Analytic Approximation of Their Volt-ampere Characteristics	70
1-15.	Piecewise-linear Approximation of Volt-ampere Characteristics of Semiconductor Diodes	77
1-16.	Rectification Coefficient	81
1-17.	Transistors and Their Principal Characteristics	82
1-18.	Dynistors and Thyristors and Their Principal Characteristics	89
1-19.	Statistical Characteristics of Principal Parameters of Semiconductor Devices	100

4/17

APPROVED FOR RELEASE: 09/01/2001 CIA-RDP86-00513R002203310017-2"

"APPROVED FOR RELEASE: 09/01/2001 CIA-RDP86-00513R002203310017-2

USSR

TISHCHENKO, N. M., Proyektirovaniye Magnitnykh i Poluprovodnikovykh Elementov Avtomatiki, Moscow, "Energiya," 1970, 639 pp

		Page
Chapter 2.	ANALOG-TYPE FERROMAGNETIC ELEMENTS	103
2-1.	Inductance Pickups	103
2-2.	Induction Pickups	108
2-3.	Magnetoelastic Pickups	112
2-4.	Magnetoanisotropic Pickups	115
2-5.	Magnetic Amplifiers of the Nonreversible-polarity Type	116
2-6.	Reversible-polarity Magnetic Amplifiers	131
2-7.	Dynamic Characteristics of Magnetic Amplifiers	134
2-8.	Magnetic a-c Amplifiers	142
2-9.	Linearity of Static Characteristic of Magnetic Amplifiers	149
2-10.	Stability of Magnetic Amplifiers	150
2-11.	Selsyn Displacement Angle Transmitters	158
2-12.	Nuclear Magnetic Resonance Converters	163

5/17

APPROVED FOR RELEASE: 09/01/2001 CIA-RDP86-00513R002203310017-2"

"APPROVED FOR RELEASE: 09/01/2001 CIA-RDP86-00513R002203310017-2

USSR

TISHCHENKO, N. M., Proyektirovaniye Magnitnykh i Poluprovodnikovykh Elementov Avtomatiki, Moscow, "Energiya," 1970, 639 pp

		Page
Chapter 3.	DISCRETE-TYPE FERROMAGNETIC ELEMENTS	169
3-1.	Electromagnetic d-c Relays	169
3-2.	Dynamic Characteristics of Relays	175
3-3.	Methods of Changing Dynamic Characteristics of Relays	178
3-4.	Electromagnetic a-c Relays	179
3-5.	Polarized Relays	181
3-6.	Contacts. Spark Quenching Methods	183
3-7.	Contactrons (Armatureless Relays)	188
3-8.	Ferrides	195
3-9.	Contactless Magnetic Relays	197
3-10.	Contactless Magnetic Time Relays	200
3-11.	Transformer Contactless Magnetic Relays	203
3-12.	Multicontact Contactless Magnetic Relays	205

6/17

APPROVED FOR RELEASE: 09/01/2001 CIA-RDP86-00513R002203310017-2"

"APPROVED FOR RELEASE: 09/01/2001 CIA-RDP86-00513R002203310017-2

USSR

TISHCHENKO, N. M., Proyektirovaniye Magnitnykh i Poluprovodnikovykh Elementov Avtomatiki, Moscow, "Energiya," 1970, 639 pp

		Page
3-13.	Magnetostatic Flip-flops	209
3-14.	Ferro-diode Elements	212
3-15.	Ferro-transistor Elements	216
3-16.	Multistable Elements	220
3-17.	Semipermanent Memory of the Transformer Type	225
3-18.	Discrete Magnetometric Converters	229
Chapter 4.	ANALOG-TYPE SEMICONDUCTOR ELEMENTS	233
4-1.	Semiconductor Rectifiers	233
4-2.	Transistor a-c Amplifiers	237
4-3.	Transistor d-c Amplifiers	237
4-4.	Stability of Transistor Amplifiers	244
4-5.	Field-effect Transistor Amplifiers	253
4-6.	Transistor Amplifiers in a Switching Made	257

7/17

APPROVED FOR RELEASE: 09/01/2001 CIA-RDP86-00513R002203310017-2"

"APPROVED FOR RELEASE: 09/01/2001 CIA-RDP86-00513R002203310017-2

USSR

TISHCHENKO, N. M., Proyektirovaniye Magnitnykh i Poluprovodnikovykh Elementov Avtomatiki, Moscow, "Energiya," 1970, 639 pp

		Page
4-7.	Static Transistor Current Converters	262
4-8.	Semiconductor Thermistor Pickups	265
4-9.	Posistor Pickups	271
4-10.	Diode and Transistor Temperature Pickups	273
4-11.	Photoresistor and Photodiode Pickups	277
Chapter 5.	DIGITAL-TYPE SEMICONDUCTOR ELEMENTS	281
5-1.	Thermistor Temperature Relays	281
5-2.	Bistable Transistor Flip-flops	283
5-3.	Transistor Relays	289
5-4.	Bistable Dynistor Flip-flops	292
5-5.	Bistable Thyristor Flip-flops	295
5-6.	Dynistor Multivibrators	296
5-7.	Dynistor Analog-to-digital Converter	299

8/17

APPROVED FOR RELEASE: 09/01/2001 CIA-RDP86-00513R002203310017-2"

"APPROVED FOR RELEASE: 09/01/2001 CIA-RDP86-00513R002203310017-2

USSR

TISHCHENKO, N. M., Proyektirovaniye Magnitnykh i Poluprovodnikovykh Elementov Avtomatiki, Moscow, "Energiya," 1970, 639 pp

		Page
5-8.	Transistor Univibrator	300
5-9.	Bistable Flip-flop Using Transistors of Varying Conduction	302
5-10.	Semiconductor Switches With Optical Communication	305
5-11.	Principal Characteristics of Optrons	311
5-12.	Examples of the Use of Optrons	315
5-13.	Light-activated Thyristor Relays	318
5-14.	Digital Integrated Elements	326

Part 2. METHODS OF DESIGNING AUTOMATIC EQUIPMENT ELEMENTS

Chapter 6. GENERAL CONSIDERATIONS ON THE DESIGNING OF AUTOMATIC EQUIPMENT ELEMENTS 329

6-1.	Design Problems	329
6-2.	Technical Design Assignment	330

9/17

APPROVED FOR RELEASE: 09/01/2001 CIA-RDP86-00513R002203310017-2"

"APPROVED FOR RELEASE: 09/01/2001 CIA-RDP86-00513R002203310017-2

USSR

TISHCHENKO, N. M., Proyektirovaniye Magnitnykh i Poluprovodnikovykh Elementov Avtomatiki, Moscow, "Energiya," 1970, 639 pp

		Page
6-3.	Stages of Designing	332
6-4.	Organization of Designing	336
6-5.	Formulation of Technical Specifications	340
6-6.	Characterization of Operating Conditions of Automatic Equipment Elements	348
6-7.	Structural Execution of Automatic Equipment Elements	357
6-8.	Quantitative Rating of Design Quality of Automatic Equipment Elements	361
6-9.	Methods of Executing Electrical Wiring	363
6-10.	Modular Designs of Automatic Equipment Elements with Digital Components	374
6-11.	Micromodular Designs of Automatic Equipment Elements	378
6-12.	Thermal Characteristics of Automatic Equipment Elements and How to Improve Them	384

10/17

APPROVED FOR RELEASE: 09/01/2001 CIA-RDP86-00513R002203310017-2"

"APPROVED FOR RELEASE: 09/01/2001 CIA-RDP86-00513R002203310017-2

USSR

TISHCHENKO, N. M., Proyektirovaniye Magnitnykh i Poluprovodnikovykh Elementov Avtomatiki, Moscow, "Energiya," 1970, 639 pp

		Page
6-13.	Methods of Protecting Automatic Equipment Elements against External Influences	393
6-14.	Noise Immunity of Automatic Equipment Elements and How to Increase It	397
6-15.	Methods of Designing Automatic Equipment Elements	402
Chapter 7.	DESIGNING ANALOG-TYPE FERROMAGNETIC ELEMENTS	406
7-1.	Calculation Procedure for Inductance Pickup	406
7-2.	Example of Inductance Pickup Calculation	413
7-3.	Examples of Design Layout of Inductance Pickups	415
7-4.	Ways of Reducing Size and Weight of Magnetic Amplifiers	417
7-5.	Providing Stable Operation of Magnetic Amplifiers	419
7-6.	Calculation Procedure for Magnetic d-c Amplifier	422
7-7.	Example of Magnetic d-c Amplifier Calculation	435

11/17

APPROVED FOR RELEASE: 09/01/2001 CIA-RDP86-00513R002203310017-2"

"APPROVED FOR RELEASE: 09/01/2001 CIA-RDP86-00513R002203310017-2

USSR

TISHCHENKO, N. M., Proyektirovaniye Magnitnykh i Poluprovodnikovykh Elementov Avtomatiki, Moscow, "Energiya," 1970, 639 pp

		Page
7-8.	Design of Magnetic Amplifiers	440
7-9.	Calculation Procedure for Nonreversible-polarity Magnetic a-c Amplifier	446
7-10.	Calculation Procedure for Reversible-polarity Magnetic a-c Amplifier	450
7-11.	Examples of Magnetic a-c Amplifier Calculation	451
7-12.	Microminiaturization of Magnetic Amplifiers	457
7-13.	Recommendations for Assuring Reliable Operation of Magnetic Amplifiers	459
Chapter 8.	DESIGNING DIGITAL-TYPE FERROMAGNETIC ELEMENTS	461
8-1.	Calculation Procedure for Contactless Magnetic Relay	461
8-2.	Example of Contactless Magnetic Relay Calculation	466

12/17

APPROVED FOR RELEASE: 09/01/2001 CIA-RDP86-00513R002203310017-2"

"APPROVED FOR RELEASE: 09/01/2001 CIA-RDP86-00513R002203310017-2

USSR

TISHCHENKO, N. M., Proyektirovaniye Magnitnykh i Poluprovodnikovykh Elementov Avtomatiki, Moscow, "Energiya," 1970, 639 pp

		Page
8-3.	Calculation Procedure for Contactless Magnetic Time Relay	476
8-4.	Example of Contactless Magnetic Time Relay Calculation	479
8-5.	Recommendations on the Design of Contactless Magnetic Relays	480
8-6.	Methods of Increasing the Stability of Contactless Magnetic Relays	487
8-7.	Calculation Procedure for Magnetostatic Flip-flop	489
8-8.	Recommendations on the Design of Semipermanent Memory of the Transformer Type	493
8-9.	Calculation Procedure for Magnetometric Converters of the Analog-to-Digital Type	498
8-10.	Calculation Procedure for Multichannel Quantum Converter of the Analog-to-Digital Type	502

13/17

APPROVED FOR RELEASE: 09/01/2001 CIA-RDP86-00513R002203310017-2"

"APPROVED FOR RELEASE: 09/01/2001 CIA-RDP86-00513R002203310017-2

USSR

TISHCHENKO, N. M., Proyektirovaniye Magnitnykh i Poluprovodnikovykh Elementov Avtomatiki, Moscow, "Energiya," 1970, 639 pp

		Page
8-11.	Calculation Procedure for Magnetometric Converters of the Angle-to-Digit Type	506
8-12.	Calculation Procedure for Ferro-transistor Element	511
8-13.	Example of Ferro-transistor Element Calculation	522
Chapter 9.	DESIGNING ANALOG-TYPE SEMICONDUCTOR ELEMENTS	524
9-1.	Thermal Operating Conditions of Transistors	524
9-2.	Electrical Operating Conditions of Transistors	528
9-3.	Methods of Increasing Reliability of Transistor Automatic Equipment Elements	532
9-4.	Calculation Procedure for Transistor d-c Amplifier	536
9-5.	Example of Transistor d-c Amplifier Calculation	542
9-6.	Methods of Transistor Amplifier Stabilization	543

14/17

APPROVED FOR RELEASE: 09/01/2001 CIA-RDP86-00513R002203310017-2"

"APPROVED FOR RELEASE: 09/01/2001 CIA-RDP86-00513R002203310017-2

USSR

TISHCHENKO, N. M., Prcyektirovaniye Magnitnykh i Poluprovodnikovykh Elementov Avtomatiki, Moscow, "Energiya," 1970, 639 pp

		Page
9-7.	Calculation Procedure for Transistor Low-frequency Amplifier.....	549
9-8.	Calculation Procedure for Static Transistor Current Converter.....	555
9-9.	Example of Calculation for Static Transistor Current Converter.....	559
9-10.	Calculation Procedure for Light-activated Thyristor Pickup.....	561
Chapter 10.	DESIGNING DIGITAL-TYPE SEMICONDUCTOR ELEMENTS.....	566
10-1.	Calculation Procedure for Dynistor Multivibrator.....	566
10-2.	Example of Dynistor Multivibrator Calculation.....	568
10-3.	Calculation Procedure for Bistable Flip-flop Using Transistors of Varying Conduction.....	570

15/17

APPROVED FOR RELEASE: 09/01/2001 CIA-RDP86-00513R002203310017-2"

"APPROVED FOR RELEASE: 09/01/2001 CIA-RDP86-00513R002203310017-2

USSR

TISHCHENKO, N. M., Proyektirovaniye Magnitnykh i Poluprovodnikovykh Elementov Avtomatiki, Moscow, "Energiya," 1970, 639 pp

		Page
10-4.	Example of Calculation for Bistable Flip-flop Using Transistors of Varying Conduction.....	572
10-5.	Design of Photoelectric Relays.....	573
10-6.	Calculation Procedure for Light-activated Thyristor Electronic Switch.....	579
10-7.	Calculation Procedure for Light-activated Thyristor One-shot Multivibrator.....	583
Chapter 11.	MONITORING THE EFFICIENCY OF AUTOMATIC EQUIPMENT ELEMENTS.....	585
11-1.	Relation between Reliability and Monitoring.....	585
11-2.	Purposes and Problems of Monitoring.....	588
11-3.	Methods of Forecasting the Operation of Automatic Equipment Elements.....	591

16/17

APPROVED FOR RELEASE: 09/01/2001 CIA-RDP86-00513R002203310017-2"

"APPROVED FOR RELEASE: 09/01/2001 CIA-RDP86-00513R002203310017-2

USSR

TISHCHENKO, N. M., Proyektirovaniye Magnitnykh i Poluprovodnikovykh Elementov Avtomatiki, Moscow, "Energiya," 1970, 639 pp

		Page
11-4.	Choice of Monitoring Parameters	598
11-5.	Methods of Increasing Accuracy of Measurements	600
11-6.	Probability of Appearance of Errors in Estimating Monitoring Results	606
11-7.	Reliability of Monitoring Results	608
11-8.	Determining the Reliability of Monitoring Results by Means of Nomograms	611
11-9.	Matrix Method of Determining the Reliability of Monitoring Results	615
APPENDICES		624
BIBLIOGRAPHY		630

17/17

APPROVED FOR RELEASE: 09/01/2001 CIA-RDP86-00513R002203310017-2"

"APPROVED FOR RELEASE: 09/01/2001 CIA-RDP86-00513R002203310017-2

USSR

UDC 620.1:531.782(088.8)

VYDRIN, V. N., AGEYEV, L. M., TISHCHENKO, O. I., SMOLIN, A. P.

"Cam Plastometer"

USSR Author's Certificate No 265518, Filed 26 Oct 68, Published 10 Jul 70 (from RZh-Metallurgiya, No 4, Apr 71, Abstract No 4I959)

Translation: The invention pertains to techniques and equipment for studying the properties of metals and alloys under various thermomechanical strain conditions. The proposed cam plastometer differs from the known ones by the fact that an additional control cam is rigidly attached to the flywheel. The additional cam is phase-shifted with respect to the operating cam and interacts with the rack and pinion inclusion mechanism on the pinion shaft of which a cam is rigidly attached with a stud which closes the kinematic loading circuit. Stability of inclusion of the kinematic loading circuit in a broad range of deformation rates of the tested sample is insured with this execution of the device.

1/1

APPROVED FOR RELEASE: 09/01/2001 CIA-RDP86-00513R002203310017-2"

"APPROVED FOR RELEASE: 09/01/2001 CIA-RDP86-00513R002203310017-2

USSR UDC: 621.374.34.012.6

TISHCHENKO, S. P.

"Dynamic Characteristics of a Limiter Amplifier in the Low-Frequency Region"

Tr. Tomskogo in-ta radioelektron. i elektron. tekhn. (Works of the Tomsk Institute of Radio Electronics and Electronic Technology), 1970, 16, pp 140-145 (from RZh-Radiotekhnika, No 7, Jul 70, Abstract No 7D121)

Translation: The author analyzes the dynamic characteristics of a limiter amplifier which consists of identical resistor stages with a nonlinear load in the form of a pair of semiconductor diodes connected in antiparallel. N. S.

1/1

APPROVED FOR RELEASE: 09/01/2001 CIA-RDP86-00513R002203310017-2"

"APPROVED FOR RELEASE: 09/01/2001 CIA-RDP86-00513R002203310017-2

USSR UDC: 621.374.34.088.8

TISHCHENKO, S. P.

"Low-Frequency Correction in a Limiter Amplifier"

Tr. Tomskogo in-ta radioelektron. i elektron. tekhn. (Works of the Tomsk Institute of Radio Electronics and Electronic Technology), 1970, 16, pp 140-145 (from RZh-Radiotekhnika, No 7, Jul 70, Abstract No 7D122)

Translation: The paper considers the possibility of reducing the displacements of transitions through zero in a limiter amplifier by using low-frequency correction for decreasing the peak drop. The correction condition is derived. Bibliography of two titles. N. S.

1/1

APPROVED FOR RELEASE: 09/01/2001 CIA-RDP86-00513R002203310017-2"

"APPROVED FOR RELEASE: 09/01/2001 CIA-RDP86-00513R002203310017-2

USSR UDC: 621.374.341.088.6

TISHCHENKO, S. P.

"High-Frequency Correction in Amplifier Limiter Stages"

Tr. Tomskogo in-ta radioelektron. i elektron. tekhn. (Works of the Tomsk Institute of Radio Electronics and Electronic Technology), 1970, 16, pp 131-134 (from RZh-Radictekhnika, No 7, Jul 70, Abstract No 7D123)

Translation: The author considers a limiter amplifier based on corrected stages with a nonlinear load. The stability of the unit is studied. N. S.

1/1

APPROVED FOR RELEASE: 09/01/2001 CIA-RDP86-00513R002203310017-2"

"APPROVED FOR RELEASE: 09/01/2001 CIA-RDP86-00513R002203310017-2

USSR

UDC: 621.396.677.8.095

KINBER, B. Ye., TISHCHENKO, V. A.

"Polarization of the Emission of Axisymmetric Mirror Antennas"

Moscow, Radiotekhnika i Elektronika, Vol 17, No 4, Apr 72, pp 680-686

Abstract: The authors analyze polarization of the emission of axisymmetric multiple-reflector antennas, i. e. Cassegrainian or modified Cassegrainian systems, systems with a spherical mirror, and also systems in which the reflectors are segments of axisymmetric mirrors (systems with a remote radiator, parabolic horn antennas). A study is made of the field of asymmetry of the emitter, i. e. the influence of rotating the emitter relative to the axis of the system and the difference between its polar diagrams in the E- and H-planes. It is shown that there is no transverse cross polarization component for emitters of "optical" type, e. g. horns. The cross polarization component of the polar diagram is investigated.

1/1

APPROVED FOR RELEASE: 09/01/2001 CIA-RDP86-00513R002203310017-2"

"APPROVED FOR RELEASE: 09/01/2001 CIA-RDP86-00513R002203310017-2

Acc. Nr: AP0045063 Abstracting Service: 5/70 Ref. Code: UR0198
INTERNAT. AEROSPACE ABST.

A70-23293 Dynamic effect of a liquid in an open reservoir performing a translational motion (Dinamicheskoe deistvie zhidkosti v otkrytom rezervuare, peremeshchaiushchemsia postupatel'no), V. N. Tishchenko and Iu. A. Shevlinkov (Donetskii Gosudarstvennyi Universitet, Donetsk, Ukrainian SSR). *Prikladnaia Mekhanika*, vol. 6, Jan. 1970, p. 94-100. 8 refs. In Russian.

Discussion of the problem of the motion of a liquid in open cylindrical U- and V-shaped tanks, in the case where a tank moves along the generating line according to a given law. A solution to the problem is obtained by reducing the equations of motion of an ideal incompressible fluid to systems of equations analogous to the equations of motion of a plane unsteady compressible gas flow with a polytropic index of two. It is shown that the longitudinal force is independent of time and the tank length.

V.P.

A45

1/1

REEL/FRAME
19771976

21

APPROVED FOR RELEASE: 09/01/2001 CIA-RDP86-00513R002203310017-2"

"APPROVED FOR RELEASE: 09/01/2001 CIA-RDP86-00513R002203310017-2

1/2 027 UNCLASSIFIED PROCESSING DATE--23OCT70

TITLE--WATERPROOFING OF MATERIALS BY ORGANOSILICON COMPOUNDS. XVIII. AGING OF FILM FORMING SOLUTIONS OF HYDROLYZED TETRAETHOXYSILANE -U-

AUTHOR-(04)-VORONKOV, M.G., PASHCHENKO, A.A., TISHCHENKO, V.T., ZAGATA, L.

COUNTRY OF INFO--USSR

SOURCE--ZH. PRIKL. KHIM. (LENINGRAD) 1970, 43(3), 611-15

DATE PUBLISHED-------70

SUBJECT AREAS--MATERIALS, CHEMISTRY

TOPIC TAGS--WATERPROOFING, ORGANOSILICON COMPOUND, ORGANIC SILANE, ACID CATALYSIS, HYDROLYSIS, HYDROGEN ION CONCENTRATION, METAL COATING

CONTROL MARKING--NO RESTRICTIONS

DOCUMENT CLASS--UNCLASSIFIED

PROXY REEL/FRAME--1995/1463 STEP NO--UR/0080/70/043/003/0611/0615

CIRC ACCESSION NO--AP0116900

UNCLASSIFIED

APPROVED FOR RELEASE: 09/01/2001 CIA-RDP86-00513R002203310017-2"

"APPROVED FOR RELEASE: 09/01/2001 CIA-RDP86-00513R002203310017-2

2/2 027 UNCLASSIFIED

CIRC ACCESSION NO--AP0116900 PROCESSING DATE--23OCT70

ABSTRACT/EXTRACT--(U) GP-0- ABSTRACT. INCREASES IN H SUB2 O CONCN. IN AQ. ME SUB2 CO AND AQ. DIOXANE SOLNS. OF SI(OET) SUB4 (I) RETARDED CONDENSATION REACTIONS AND INTENSIFIED THE ACID CATALYZED INITIAL HYDROLYSIS PROCESS WITH THE RESULT THAT THE MAX. IN THE ISOTHERMAL CURVES FOR THE VARIATION OF N SUBD PRIME20 WITH TIME WERE SHIFTED TO THE RIGHT. THE EFFECT OF CATALYTIC AMTS. OF ACIDS LASTED ONLY BRIEFLY WHEN HCL AND HNO SUB3 WERE USED AND FOR 300 DAYS WHEN H SUB3 PO SUB4 WAS USED BECAUSE SOLNS. CONTG. THE FORMER RAPIDLY APPROACHED PH 7 WHEREAS THOSE CONTG. THE LATTER REMAINED AT PH IS SMALLER THAN 7. ISOTHERMAL TIME VARIATIONS OF ALL OF THE PROPERTIES TESTED (D SUB20, N SUBD PRIME20, VISCOSITY, AND OPTICAL D.) EXHIBITED MAX. CORRESPONDING TO THE HIGHEST CONCNS. OF SIOH GROUPS, THE AMT. OF WHICH WERE REDUCED LATER BY CONDENSATION REACTIONS. METAL COATING PROPERTIES OF PARTIALLY HYDROLYZED I WERE BEST WHEN ME SUB2 CO SOLNS. CONTG. I, H SUB2 O, AND HNO SUB3 IN AMTS. OF 0.1-1.0, 2-3, AND 0.015-0.04 MOLE-L WERE USED.

UNCLASSIFIED

APPROVED FOR RELEASE: 09/01/2001 CIA-RDP86-00513R002203310017-2"

"APPROVED FOR RELEASE: 09/01/2001 CIA-RDP86-00513R002203310017-2

USSR

TISHCHENKO, V. V.

"The Problem of Determination of the Accuracy and Information Content of the Functioning of Electronic Models of the Human Sensory System"

Probl. Bioniki. Resp. Mezhved. Temat. Nauch.-Tekhn. Sb. [Problems of Bionics. Republic Interdepartmental Thematic Scientific and Technical Collection], 1973, No 10, pp 109-113 (Translated from Referativnyy Zhurnal Kibernetika, No 10, 1973, Abstract No 10V784)

Translation: In order to determine the accuracy and information content of the functioning of electronic models reflecting the properties of sensory systems, a method has been developed for testing the accuracy, reaction time and quantity of information in the output signal in relationship to the input. The expediency is proven of testing these parameters in determining the identity of the operation of the models.

Author's view

1/1

APPROVED FOR RELEASE: 09/01/2001 CIA-RDP86-00513R002203310017-2"

"APPROVED FOR RELEASE: 09/01/2001 CIA-RDP86-00513R002203310017-2

USSR

UDC: 8.74

SHABANOV-KUSHNARENKO, Yu. P., YERYOMIN, G. S., KACHKO, Ye. G., MARCHENKO, Yu. S., PCHELINOV, V. P., TISHCHENKO, V. V.

"On the Problem of Axiomatic Construction of Mathematical Models"

Probl. bioniki. Resp. mezhved. temat. nauch.-tekhn. sb. (Problems of Bionics. Republic Interdepartmental Thematic Scientific and Technical Collection), 1971, vyp. 6, pp 70-74 (from RZh-Kibernetika, No 1, Jan 72, Abstract No 1V1074)

Translation: Mathematical methods are proposed for describing objects which have known input and output signals. Authors' abstract.

1/1

APPROVED FOR RELEASE: 09/01/2001 CIA-RDP86-00513R002203310017-2"

"APPROVED FOR RELEASE: 09/01/2001 CIA-RDP86-00513R002203310017-2

USSR

UDC 51:155.001.57:612.82

DYUBKO, G. F., TISHCHENKO, V. V.

"Mathematical Model of Statistical Conversion of Intensities of Vibration in Vibration Sensation"

Probl. Bioniki. Resp. Mezhved. Nauchno-tekhn. Sb. [Problems of Bionics, Republic Interdepartmental Scientific and Technical Collection], No 4, 1970, pp 50-54, (Translated from Referativnyy Zhurnal, Kibernetika, No 6, 1971, Abstract No 6 V678).

Translation: A mathematical model is studied, allowing the probability of fulfillment of an exponential rule for the vibration sensitivity of the skin to be tested.

1/1

APPROVED FOR RELEASE: 09/01/2001 CIA-RDP86-00513R002203310017-2"

"APPROVED FOR RELEASE: 09/01/2001 CIA-RDP86-00513R002203310017-2

USSR

UDC 51:155.001.57:612.82

MURASHKO, A. G., TISHCHENKO, V. V.

"Mathematical Model of Vibration Sensitivity"

Probl. Bioniki. Resp. Mezhved. Nauchno-tekhn. Sb. [Problems of Bionics, Republic Interdepartmental Scientific and Technical Collection], No 4, 1970, pp 82-85, (Translated from Referativnyy Zhurnal, Kibernetika, No 6, 1971, Abstract No 6 V679 by the authors).

Translation: A method is suggested for construction of a mathematical model of the vibration sensitivity as one source of perception of information by man.

1/1

APPROVED FOR RELEASE: 09/01/2001 CIA-RDP86-00513R002203310017-2"

"APPROVED FOR RELEASE: 09/01/2001 CIA-RDP86-00513R002203310017-2

USSR UDC 547.836.3.07:541.67:543.422.4.6

TISHCHENKOVA, I. F., KHOLODOV, L. Ye., and YASHUNSKIY, V. G., All Union Scientific Chemical-Pharmaceutical Research Institute imeni S. Ordzhonikidze, Moscow

"Quinindines. VII. Study of the Synthetic Routes of β-Quinindene"

Riga, Khimiya Geterotsiklicheskikh Soyedineniy, No 1, Jan 71, pp 102-107

Abstract: Various approaches to the synthesis of β-quinindene (I) are discussed. Rearrangement of acetic anhydride of β-quinindane-N-oxide followed by hydrolysis and dehydration gives a dimer of (I). (I) can be obtained by dehydrobromination of 3-bromo-β-quinindane (II) which could be synthesized by converting β-quinindane to a 3-lithium derivative and reacting it with cyanogen bromide at -15°. Dehydrobromination of (II) was achieved by heating it in dimethylformamide for 30 min on a steam bath in presence of triethylamine. (I) is very unstable; it dimerizes in acid medium and on heating. PMR data indicated that the product, in spite of giving only a single spot on the TLC plates, actually represented a mixture of 1H- and 3H-β-quinindene.

1/1

APPROVED FOR RELEASE: 09/01/2001 CIA-RDP86-00513R002203310017-2"

"APPROVED FOR RELEASE: 09/01/2001 CIA-RDP86-00513R002203310017-2

1/2 011 UNCLASSIFIED PROCESSING DATE--30OCT7

TITLE--SYNTHESIS AND THE INVESTIGATION OF SOME 4H-BETA-QUININDINES, THE HETEROCYCLIC ANALOGS OF AZULENE -U-

AUTHOR-(03)-KHOLODOV, L.E., TISHCHENKOVA, I.F., YASHUNSKIY, V.G.

COUNTRY OF INFO--USSR

SOURCE--TETRAHEDRON LETT. 1970, (18), 1535-8

DATE PUBLISHED--------70

SUBJECT AREAS--CHEMISTRY, BIOLOGICAL AND MEDICAL SCIENCES

TOPIC TAGS--HETEROCYCLIC NITROGEN COMPOUND, CHEMICAL SYNTHESIS, MOLECULAR STRUCTURE, IODINATED ORGANIC COMPOUND, CHLORINATED ORGANIC COMPOUND, AROMATIC KETONE, AMINE DERIVATIVE

CONTROL MARKING--NO RESTRICTIONS

DOCUMENT CLASS--UNCLASSIFIED

PROXY REEL/FRAME--3001/1182 STEP NO--UR/0000/70/000/018/1535/1538

CIRC ACCESSION NO--AP0126784

UNCLASSIFIED

APPROVED FOR RELEASE: 09/01/2001 CIA-RDP86-00513R002203310017-2"

"APPROVED FOR RELEASE: 09/01/2001 CIA-RDP86-00513R002203310017-2

2/2 011 UNCLASSIFIED PROCESSING DATE--30OCT7(

CIRC ACCESSION NO--AP0126784

ABSTRACT/EXTRACT--(U) GP-0- ABSTRACT.

4,METHYL,1,2,DIHYDRO,4H,BETA,QUININDINE (I) IS TREATED WITH BZCL OR PHNCO TO GIVE II AND III, WHICH ARE TREATED WITH CHLORANIL TO GIVE IV AND V, RESP. II IS TREATED WITH HI TO GIVE VI; SIMILARLY PREPD. IS VII. FACILITY: S. ORDZHONIKIDZE ALL UNION CHEM PHARM. SCI. RES. INST., MOWCOW, USSR.

UNCLASSIFIED

APPROVED FOR RELEASE: 09/01/2001 CIA-RDP86-00513R002203310017-2"

"APPROVED FOR RELEASE: 09/01/2001 CIA-RDP86-00513R002203310017-2

TISHCHENKOVA N. T.

2

USSR

UDC 621.382.2

BERLIN, A. S., GOLOVANOV, YU. A., DAVYDOV, V. M., MIKHAYLOVA, L. G., MIKHAYLOV, L. N., TISHCHENKOV, N. T.

"Epitaxial Parametric Diode Based on Gallium Arsenide"

V sb. Poluprovodn. pribory i ikh primenenive (Semiconductor Devices and Their Applications -- Collection of Works), Vyp. 22, Moscow, "Sov.radio," 1969, pp 13-28 (from RZh-Elektronika i yeye primenenive, No 4, Apr 70, Abstract No 4B195)

Translation: Parametric semiconductor diodes (SD) with a metal-- n GaAs--n + GaAs structure are investigated. On the basis of a calculation of the resistance of a SD, with the surface microwave frequency -- losses taken into account, the advantage of the use of epitaxial films is shown. Epitaxial layers of n-type GaAs with an impurity concentration of $5 \cdot 10^{15}$ -- 10^{17} cm^{-3} and a thickness of 0.5-- 2 microns were obtained by the method of gas-transport reactions in a circulating system with the use of $AsCl_3$ and Ga as the parent substance. The substrates were made of GaAs, doped

1/2

APPROVED FOR RELEASE: 09/01/2001 CIA-RDP86-00513R002203310017-2"

"APPROVED FOR RELEASE: 09/01/2001 CIA-RDP86-00513R002203310017-2

USSR

BERLIN, A. S., et al, V sb. Poluprovodn. pribory i ikh primenenive, Vyp. 22, Moscow, "Sov.radio," 1969, pp 13-28 (from RZh-Elektronika i yeye primenenive, No 4, Apr 70, Abstract No 4B195)

with Te up to concentrations of 10^{19} cm^{-3}. The planar SD were prepared either by chemical precipitation of Ni or by deposition of Au or Ag in a SiO_2 window, applied on the GaAs surface by the method of cathode sputtering of Si in an O_2 atmosphere. The diameter of the window prepared by photolithography amounted to 5--25 microns. Annealing of the SD performed in a N_2 atmosphere showed that the maximum temperature for Au--GaAs, Ag-GaAs and Ni-GaAs contacts was 230, 300, and 450°, respectively. The capacitance and time constant of the experimental SD with a Schottky barrier constituted 0.01--0.1 nanofarad and 0.15--0.6 nanosecond at frequencies of 10 and 35 gHz. A. Ye.

2/2

APPROVED FOR RELEASE: 09/01/2001 CIA-RDP86-00513R002203310017-2"

"APPROVED FOR RELEASE: 09/01/2001 CIA-RDP86-00513R002203310017-2

USSR

UDC 547.26'118

GUBNITSKAYA, Ye. S., TISHCHISHINA, N. S., and KIRSANOV, A. V., Institute of Organic Chemistry, Academy of Sciences, UkrainianSSR

"Derivatives of Dialkylphosphonic Acid Ethyleneamides"

Leningrad, Zhurnal Obshchey Khimii, Vol 42 (105), No 4, Apr 73, pp 739-743

Abstract: Reaction of phosgene with ethyleneamides of dialkylphosphoric acids leads to the formation of N-dialkylphosphono-N-(2-chloroethyl)carbaminic acid chlorides which react with ammonia, amines, potassium salt of diisopropylthiolthionephosphoric acid, and sodium azide to yield respective derivatives. N-Dialkylphosphonoimidazolidenones-2 can be obtained by reacting N-dialkyl-phosphono-N-(2-chloroethyl)ureas with a base.

1/1

APPROVED FOR RELEASE: 09/01/2001 CIA-RDP86-00513R002203310017-2"

"APPROVED FOR RELEASE: 09/01/2001 CIA-RDP86-00513R002203310017-2

USSR

UDC 547.26'118

IVANOVA, ZH. M., STUKALO, YE. A., TISHCHISHINA, N. S., DERKACH, G. I. (DECEASED), Institute of Organic Chemistry, Kiev, Academy of Sciences Ukrainian SSR

"Isocyanates of Cyclic Ethers and Etheramides of Phosphorus Acids"

Leningrad, Zhurnal Obshchey Khimii, Vol 40, No 9, Sep 70, pp 1942-1948

Abstract: In continuation of previous work, 2-chloro-4-methylphosphorinane, N-methyl- and N-phenyl-2-chloro-1,3,2-oxazaphospholanes were reacted with sodium cyanate to yield 2-isocyanato-4-methylphosphorinane and N-methyl- and N-phenyl-2-isocyanato-1,3,2-oxazaphospholanes. These products are soluble in most organic solvents except petroleum ether; they react slowly with water and easily add a sulfur atom when heated with phosphorus thiochloroxide. 2-Isocyanato-2-oxophospholane and 2-isocyanato-2-oxo-4-methylphosphorinane react violently with water and easily add alcohols, oximes, enamines, and hetero cyclic methylene bases at the isocyanate group. Their thioanalogues react much slower with water and other nucleophilic compounds.

1/1

APPROVED FOR RELEASE: 09/01/2001 CIA-RDP86-00513R002203310017-2"

"APPROVED FOR RELEASE: 09/01/2001 CIA-RDP86-00513R002203310017-2

Information Theory

USSR

UDC: 681.322

+1

ALESHCHENKOV, V. B., GRIGORENKO, N. P., GULYAYEV, V. A., MATALIN, L. A., TISHECHKIN, A. S.

"Data Gathering System"

Moscow, Pribory i tekhnika eksperimenta, No 1, Jan-Feb 71, pp 89-93

Abstract: The data gathering system is defined as the control of the parameters of a system under test through the accumulation of data with a minimal expenditure of human labor and in a form convenient for input to an electronic computer. The system considered in this paper is based on a switching analog-digital converter. Signals from various sensors feed into the switching device, which is directed by a control apparatus to select a single signal for input to the converter, and thence to a linearizer, a frequency meter, and a readout device in succession. The exchange of signal information among these blocks is indicated in an accompanying block diagram and is explained in the text together with an account of what happens inside each of the blocks.

1/2

APPROVED FOR RELEASE: 09/01/2001 CIA-RDP86-00513R002203310017-2"

"APPROVED FOR RELEASE: 09/01/2001 CIA-RDP86-00513R002203310017-2

USSR

ALESHCHENKOV, V. B., et al, Pribory i tekhnika eksperimonta, No 1, Jan-Feb 71, pp 89-93

These blocks are also physically separate and are housed in two sections, one of which is equipped with a perforator and a digital printer. The system's technical specifications are listed in a short paragraph.

2/2

APPROVED FOR RELEASE: 09/01/2001 CIA-RDP86-00513R002203310017-2"

"APPROVED FOR RELEASE: 09/01/2001 CIA-RDP86-00513R002203310017-2

UNCLASSIFIED

TITLE--EFFECT OF SEX HORMONES ON THE SYNTHESIS OF NUCLEAR AND CYTOPLASMIC RNA IN THE LIVERS OF GROWING RATS -U-

PROCESSING DATE--09OCT70

AUTHOR-(02)-GOLBER, L.M., TISHENINA, R.S.

COUNTRY OF INFO--USSR

SOURCE--DOKL. AKAD. NAUK SSSR 1970, 190(4), 1001-3

DATE PUBLISHED----------70

SUBJECT AREAS--BIOLOGICAL AND MEDICAL SCIENCES

TOPIC TAGS--REPRODUCTIVE SYSTEM, SURGERY, TESTOSTERONE, LIVER, TISSUE PHYSIOLOGY, RNA, DNA, MOLECULAR BIOLOGY

CONTROL MARKING--NO RESTRICTIONS

DOCUMENT CLASS--UNCLASSIFIED

PROXY REEL/FRAME--1988/0937

STEP NO--UR/0020/70/190/004/1001/1003

CIRC ACCESSION NO--AT0105806

UNCLASSIFIED

APPROVED FOR RELEASE: 09/01/2001 CIA-RDP86-00513R002203310017-2"

"APPROVED FOR RELEASE: 09/01/2001 CIA-RDP86-00513R002203310017-2

2/2 026

UNCLASSIFIED

CIRC ACCESSION NO--AT0105806 PROCESSING DATE--09OCT70

ABSTRACT/EXTRACT--(U) GP-0- ABSTRACT. CASTRATION OF MALE RATS REDUCED THE SYNTHESIS OF HIGH POLYMER RIBOSOMAL RNA IN RAT LIVER, BUT SYNTHESIS WAS RESTORED TO GREATER THAN NORMAL LEVELS BY SUBSEQUENT ADMINISTRATION OF TESTOSTERONE PROPIONATE (4 MG I.M.). ESTRONE (0.1 MG I.M.) TREATMENT FOLLOWING OVARIECTOMY OF IMMATURE FEMALE RATS RESTORED RNA SYSTNESIS ALMOST TO NORMAL LEVELS. AURANTIN (15 G, I.P.) ADMINISTERED TO GROWING RATS BEFORE TESTOSTERONE ADMINISTRATION REDUCED THE HORMONAL EFFECT ON NUCLEAR RNA SYNTHESIS IN THE LIVER OF DEVELOPING MALE RATS. HIGH POLYMER RIBOSOME RNA NEWLY SYNTHESIZED IN LIVER NUCLEI UNDER THE EFFECT OF SEX HORMONES ENTERS THE CYTOPLASM WHERE PROTEIN SYNTHESIS OCCURS UNDER THE EFFECT OF THIS MACROMOL. PLUS DNA LIKE RNA. THE ACTION OF THE SEX HORMONES ON PROCESSES OCCURRING IN THE LIVER AS WELL AS IN ORGANS INDEPENDENT OF DIRECT HORMONE ACTION APPARENTLY ARE BASED ON THE SAME MECHANISMS AS THOSE IN THE TARGET ORGAN.

ENDOKRINOL. KHIM. GORMONOV, MOSCOW, USSR. FACILITY: INST. EKSP.

UNCLASSIFIED

APPROVED FOR RELEASE: 09/01/2001 CIA-RDP86-00513R002203310017-2"

"APPROVED FOR RELEASE: 09/01/2001 CIA-RDP86-00513R002203310017-2

USSR

UDC: 621.373.531.1

BURAKOV, O. N., TISHENKO, A. M., SHTERK, M. D.

"Temperature Stabilization of the Pulse Duration of Multivibrators Based on Silicon Transistors"

V sb. Poluprovodn. pribory v tekhn. elektrosvyazi (Semiconductor Devices in Technical Electrical Communications--collection of works), Moscow, "Svyaz'", 1970, pp 167-170 (from RZh-Radiotekhnika, No 1, Jan 71, Abstract No 1G223)

Translation: The authors discuss a method of controllable stabilitron compensation of temperature changes in the pulse duration of multivibrators based on silicon transistors. An analysis is made and recommendations are given which can be used in designing multivibrators both in classical circuitry and on composite transistors. Experimental data are given. Bibliography of one title. Resumé.

1/1

APPROVED FOR RELEASE: 09/01/2001 CIA-RDP86-00513R002203310017-2"

"APPROVED FOR RELEASE: 09/01/2001 CIA-RDP86-00513R002203310017-2

USSR

UDC 629.7.036.54

TISHIN, A. P., KHUDYAKOV, V. A., KOSTIN, V. N.

"On the Retention of Condensate Particle Crystallization in the Nozzle of a Jet Engine"

Kazan', Izvestiya vysshikh uchebnykh zavedeniy - Aviatsionnaya tekhnika, No. 2, 1971, pp 24-31

Abstract: The effect of crystallization retention of condensate particles in the nozzle on the power characteristics of a jet engine are discussed. It is noted that in the standard technique for calculating the thermodynamic characteristics of rocket fuels, it is assumed that the expansion process in the nozzle is an equilibrium process. For fuels with two-phase combustion products this indicates that under expansion the temperature and rate of the particles and the gas are equal and the condensate as it cools in the nozzle passes uniformly through phase states. For example, the combustion products of solid fuels with Al additives contain 15-35% condensed aluminum oxide which has a melting point of 2303°K. The combustion temperature of these fuels is 3000-3500°K and the temperature of products at the cutoff of the nozzle is 1500-2000°K. The aluminum oxide particles in the combustion chamber are in the cold state according to an equilibrium thermodynamic calculation; the temperature of the products reaches 2303°K upon expansion in a certain cross section of the nozzle. The expansion process subsequently occurs isothermally until the

1/2

APPROVED FOR RELEASE: 09/01/2001 CIA-RDP86-00513R002203310017-2"

"APPROVED FOR RELEASE: 09/01/2001 CIA-RDP86-00513R002203310017-2

USSR

TISHIN, A. P., et al, Izvestiya vysshikh uchebnykh zavedeniy - Aviatsionnaya tekhnika, No. 2, 1971, pp 24-31

heat of aluminum oxide crystallization is transformed into kinetic energy. In this section of the nozzle the condensate gradually transforms from the liquid to the solid state as heat is transferred to the gas. In each cross section the amount of hardened concentrate is equal to the amount of heat of crystallization removed. In the actual case the equilibrium process may be limited, first by the finite rate of crystallization and second by the finite rate of heat transfer from particles to the gas. Results of an approximate thermodynamic calculation and of special thermodynamic calculations of two compositions with 7 and 15% aluminum are given for determining the relative effectiveness of the expansion process in the absence of crystallization. Also given are the results of calculations of known equilibrium flows of two-phase combustion products of a composition with 15% Al for the study of the effect of the rate of heat exchange between particles in the gas on the crystallization process. It is shown that in a real case the phase transition heat may be achieved in the nozzle to a considerable degree only under suitable conditions of heat exchange between the particles and the gas.

2/2

APPROVED FOR RELEASE: 09/01/2001 CIA-RDP86-00513R002203310017-2"

"APPROVED FOR RELEASE: 09/01/2001 CIA-RDP86-00513R002203310017-2

USSR

UDC 535.376:621.382

BALUKOVA, G.N., PUTILOVSKAYA, M.YU., TISHKIN, A.N.

"Thermal Resistance Of Gallium Arsenide Light-Emitting Diodes In A Static Regime"

Elektron.tekhnika. Nauch.-tekhn.sb. Poluprovodn. pribory (Electronics Technology. Scientific-Technical Collection. Semiconductor Devices), 1972, Issue 4(68), pp 81-85 (from RZh:Elektronika i yeye primeneniye, No 11, Nov 1972, Abstract No 11B355)

Translation: The paper studies the thermal regime of noncased small-sized light-emitting diodes of GaAs obtained by the diffusion method. A calculation of the thermal resistance is presented as well as an evaluation of the maximum excess of the temperature of the light-emitting diode above the environment with a given dissipated power. The calculated data are compared with the experimental. Summary.

1/1

APPROVED FOR RELEASE: 09/01/2001 CIA-RDP86-00513R002203310017-2"

"APPROVED FOR RELEASE: 09/01/2001 CIA-RDP86-00513R002203310017-2

USSR

UDC 53.07/.08+53.001.5

TISHKIN, P. A.

"Experimental Methods of Nuclear Physics. Part 1. Nuclear Radiation Detectors. Scientific Aid for Physics Faculties of Higher Educational Institutions"

Eksperimental'nyye metody yadernoy fiziki. Ch. 1. Detektory yadernykh izlucheniy (cf. English above), Leningrad, Leningrad University, 1970, 232 pp, ill. 59 k. (from RZh-Fizika, No 1, Jan 71, Abstract No 1A625K)

Translation: Contents of book: 1. Nuclear Radiation and Its Properties; 2. Ionization Chambers; 3. Proportional Counters; 4. Counters with Spontaneous Discharge; 5. Scintillation Counters; 6. Cerenkov Counters; 7. Crystal Counters; 8. Spark Counters and Chambers; 9. Wilson Cloud Chambers, Diffusion and Bubble; 10. The Photoemulsion Method.

1/1

APPROVED FOR RELEASE: 09/01/2001 CIA-RDP86-00513R002203310017-2"

"APPROVED FOR RELEASE: 09/01/2001 CIA-RDP86-00513R002203310017-2

USSR

UDC: 621.373.826

BASHIROV, B. I., GLEBOVA, N. N., MELAMUD, G. B., TISHKOV, P. G.

"Use of a Ring Laser for Measuring Gas Flowrate by Mass"

Tr. Metrol. in-tov SSSR (Works of Metrological Institutes of the USSR), 1972, vyp. 136(196), pp 116-120 (from RZh-Radiotekhnika, No 12, Dec 72, abstract No 12D225 [résumé])

Translation: The paper presents the results of a study of a laser flowmeter based on a laser with rectangular ring cavity. Consideration was given to methods of increasing the sensitivity of the flowmeter, emission conditions, the zone of "frequency clamping" and losses in the cavity, and the effect of vibrations and remote equipment on laser operation. One illustration, bibliography of eight titles.

1/1

APPROVED FOR RELEASE: 09/01/2001 CIA-RDP86-00513R002203310017-2"

"APPROVED FOR RELEASE: 09/01/2001 CIA-RDP86-00513R002203310017-2

USSR UDC 539.4.015

BLANTER, M. YE., KOVALEVA, L. A., and TISKOVICH, N. L., (Moscow)

"Nature of the Strengthening of Maraging Steel"

Moscow, Fizika i Khimiya Obrabotki Materialov, No 5, Sep-Oct 70, pp 151-153

Abstract: A previous article by the authors reported the anomalous effect of decreased strength with 90% deformation of steel pre-aged at 475°. The article showed that an ultimate strength of 250-270 kg/mm^2 can be obtained in maraging steel after combined treatment. The present article attempts to study the nature of the high strength of maraging steel. Maraging steel with the composition 18% Ni, 8% Co, 5% Mo, and 1% Ti was treated under the following regime: hardening + aging + deformation (with shrinkages of up to 90%) + aging. Hardening was performed from 950° C in air. The first aging was under the following conditions: 375° for 1 hour, 475° 30 min. and 475° 3 hours. Re-aging took place at 450° for 3 hours. The results indicate that aging processes take place

1/2

APPROVED FOR RELEASE: 09/01/2001 CIA-RDP86-00513R002203310017-2"

"APPROVED FOR RELEASE: 09/01/2001 CIA-RDP86-00513R002203310017-2

USSR

BLANTER, M. YE., et al., Fizika i Khimiya Obrabotki Materialov, No 5, Sep-Oct 70, pp 151-153

in maraging steel during deformation at room temperature, and the increase in deformation hardness is due not only to cold hardening, but also to precipitation hardening. A study of data on variations in the electrical resistance and lattice parameter of the solid solution indicates that back dissolution of strengthening zones occurs in steel pre-aged at 475° C, and this results in reduced strength of the steel under 90% deformation.

2/2

APPROVED FOR RELEASE: 09/01/2001 CIA-RDP86-00513R002203310017-2"

"APPROVED FOR RELEASE: 09/01/2001 CIA-RDP86-00513R002203310017-2

172 015

UNCLASSIFIED

TITLE--SOME ZINK CONTAINING DEHYDROGENASES IN ACUTE MYOCARDIAL INFARCTION

-U-

PROCESSING DATE--13NOV70

AUTHOR-(02)-DOVGYALLO, G.KH., TISHKOVSKIY, V.G.

COUNTRY OF INFO--USSR

SOURCE--TERAPEVTICHESKIY ARKHIV, 1970, VOL 42, NR 4, PP 84-86

DATE PUBLISHED-------70

SUBJECT AREAS--BIOLOGICAL AND MEDICAL SCIENCES

TOPIC TAGS--ZINC, BLOOD SERUM, ENZYME, DEHYDROGENASE

CONTROL MARKING--NO RESTRICTIONS

DOCUMENT CLASS--UNCLASSIFIED

PROXY REEL/FRAME--2000/0422

STEP NO--UR/0504/70/042/004/0084/0086

CIRC ACCESSION NO--AP0124173

UNCLASSIFIED

APPROVED FOR RELEASE: 09/01/2001 CIA-RDP86-00513R002203310017-2"

"APPROVED FOR RELEASE: 09/01/2001 CIA-RDP86-00513R002203310017-2

2/2 015 UNCLASSIFIED

CIRC ACCESSION NO--AP0124173 PROCESSING DATE--13NOV70

ABSTRACT/EXTRACT--(U) GP-0- ABSTRACT. THE AUTHORS STUDIED THE ACTIVITY OF LACTIC, MALICDEHYDROGENASE AND THE ZINK CONTENT IN THE BLOOD SERUM OF 178 PATIENTS WITH DIFFERENT FORMS OF CORONARY INSUFFICIENCY WITH A VIEW TO FINDING THE GENISIS OF HYPERENZYMEIA OF THESE ZINK CONTAINING DEHYDROGENASES. THERE IS AN INDIRECT CORRELATION IN THE CHANGES OF LACTICDEHYDROGENASE AND ZINK. TAKING INTO CONSIDERATION A GREAT NUMBER OF COINCIDENCES IN THE DEGREE OF DEVIATIONS OF ZINK AND LACTATEDEHYDROGENASE FROM THE NORMAL AND THE PRESENCE OF INDIRECT CORRELATION BETWEEN THEN THE AUTHORS CAME TO THE CONCLUSION THAT PROLONGED HYPERENZYMEIA IN ACUTE MYOCARDIAL INFARCTION IS NOT ONLY THE RESULT OF ELIMINATION OF THE ENZYME FROM THE CHANGED CELLS OF THE MYOCARDIUM INTO THE BLOOD BUT ALSO THE CONSEQUENCE OF PECULIAR INTERRELATION WITH ZINK. FACILITY: I YA KAFEDRA GOSPITAL'NOY TERAPII MINSK MEDITSINSKOGO INSTITUTA.

UNCLASSIFIED

APPROVED FOR RELEASE: 09/01/2001 CIA-RDP86-00513R002203310017-2"

"APPROVED FOR RELEASE: 09/01/2001 CIA-RDP86-00513R002203310017-2

1/2 022 UNCLASSIFIED PROCESSING DATE--09OCT70

TITLE--ANALYSIS OF THE SPECTRUM AT THE OUTPUT OF A NONLINEAR ACTIVE ELEMENT -U-

AUTHOR-(03)-MATYUKOV, G.F., MUSKVICHEV, V.N., TISHUK, N.S.

COUNTRY OF INFO--USSR

SOURCE--AKADEMIIA NAVUK BSSR, VESTSI, SERYIA FIZIKA-TEKHNICHNYKH NAVUK, NO. 1, 1970, P. 75-78

DATE PUBLISHED--------70

SUBJECT AREAS--ELECTRONICS AND ELECTRICAL ENGR., NAVIGATION

TOPIC TAGS--SPECTRUM ANALYSIS, SIGNAL MODULATION

CONTROL MARKING--NO RESTRICTIONS

DOCUMENT CLASS--UNCLASSIFIED

PROXY REEL/FRAME--1991/0329 STEP NO--UR/0201/70/000/001/0075/0078

CIRC ACCESSION NO--AP0110217

UNCLASSIFIED

APPROVED FOR RELEASE: 09/01/2001 CIA-RDP86-00513R002203310017-2"

"APPROVED FOR RELEASE: 09/01/2001 CIA-RDP86-00513R002203310017-2

2/2 022 UNCLASSIFIED PROCESSING DATE--09OCT70

CIRC ACCESSION NO--AP0110217

ABSTRACT/EXTRACT--(U) GP-0- ABSTRACT. ANALYSIS OF THE SPECTRAL COMPOSITION OF THE OUTPUT SIGNAL DURING MODULATION OF A NONLINEAR ACTIVE ELEMENT IN THE PRESENCE OF NONLINEAR STATIC MODULATION CHARACTERISTICS. THE CALCULATION OF THE SIGNAL SPECTRUM IN THE PRESENCE OF DISTORTIONS OF THE MODULATING VOLTAGE IS REPRESENTED IN THE FORM OF A MODULATION BY MULTIPLE FREQUENCIES. ANALYTICAL EXPRESSIONS ARE OBTAINED FOR THE AMPLITUDE COEFFICIENTS OF THE SPECTRUM COMPONENTS IN THE CASE OF AMPLITUDE, FREQUENCY, AND COMBINED AMPLITUDE AND FREQUENCY MODULATION.

FACILITY: MINSKII RADIOTEKHNICHESKII INSTITUT, MINSK, BELORUSSIAN SSR.

UNCLASSIFIED

APPROVED FOR RELEASE: 09/01/2001 CIA-RDP86-00513R002203310017-2"

"APPROVED FOR RELEASE: 09/01/2001 CIA-RDP86-00513R002203310017-2

AA0040652

UR 0482

Soviet Inventions Illustrated, Section I Chemical, Derwent, 1-70

240886 REMOVING OF BURRS IN ELECTRICAL RESISTANCE WELDING OF PLATES, involves using knives 7 which cut off burrs on the two sides of the plates after completing the upsetting stroke. The two welded plates 12 are held in clamping blocks 1', 1, and 2,2'.which in welding operation are driven one against the other till the clearances δ between the blocks and central welding unit (parts 3 and 4) become zero. At that instant the knives which are electrically insulated from the rest of the machine are pushed forward, remove the burrs and also plastically deform the weld which considerably improves its quality.

AUTHORS: ~~Tishura, V. I.;~~ Sakharnov, V. A.; Galyan, B. A.; Yavorskiy, Yu. D.; and Sakhatskiy, G. P.

18

19750236

APPROVED FOR RELEASE: 09/01/2001 CIA-RDP86-00513R002203310017-2"

"APPROVED FOR RELEASE: 09/01/2001 CIA-RDP86-00513R002203310017-2

AA0040652

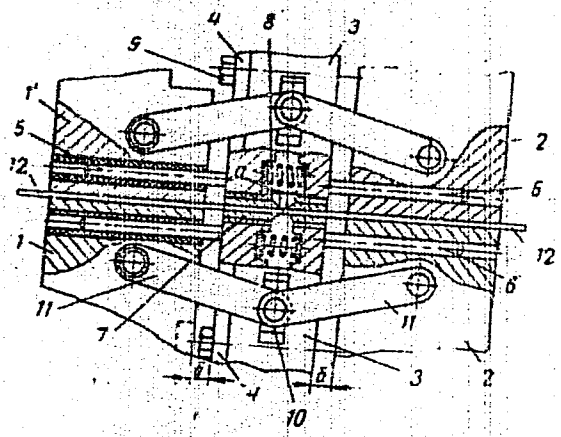

3.4.67 as 1144854/25-27 Add to 217556. V.I.TISHURA et alia. E.O. PATON'S ELECTRICAL WELDING INST. (22.8.69) Bul 13/1.4.69. Class 21h. Int.Cl.H 05b.

2/2

Institut Elektrosvarki imeni E. O. Patona

19750237

4D

APPROVED FOR RELEASE: 09/01/2001 CIA-RDP86-00513R002203310017-2"

"APPROVED FOR RELEASE: 09/01/2001 CIA-RDP86-00513R002203310017-2

USSR

TSYPUGINA, V. G., TISKI, N. S., and LAZORENKO, G. YE.

"Artificial and Natural Radionuclides in the Life of Hydrobionts"

Iskusstvennyye i yestestvennyyye radionuklidy v zhizni gidrobiontov (cf. English above), Kiev, "Nauk. dumka," 1973, 152 pp ill., 96 k. (from RZh-Biologicheskaya Khimiya, No 15, Aug 73, Abstract No 15F1372 K)

Translation: Results are presented from studies on the caryology and radiation cytogenetics of salt-water fish, the accumulation and distribution of uranium in marine organisms, and on the mechanism responsible for the storage of radionuclides by water plants.

1/1 - END -

CSO: 1841-W

APPROVED FOR RELEASE: 09/01/2001 CIA-RDP86-00513R002203310017-2"

"APPROVED FOR RELEASE: 09/01/2001 CIA-RDP86-00513R002203310017-2

3

USSR

UDC 621.382.2

DUBNIN, [illegible], [illegible], V.[illegible], [illegible], D.I., [illegible], [illegible], STROKAN, N.B.
SUBASHIYEVA, V.[illegible], TISNEK, N.I. [Physico-Technical Institute imeni A.F. Ioffe,
Academy Of Sciences, USSR, Leningrad]

"High-Resolution Counters Of Germanium With Radiation-Induced Defects"

Fizika i tekhnika poluprovodnikov, Vol 6, No 4, Apr 1972, pp 779-781

Abstract: The characteristics are presented of counters obtained as usual on the basis of germanium with $N_D - N_A \sim 10^{12}$ cm^{-3} but with a decrease of more than one order of magnitude of the background of impurities and defects N_f. The amplitude spectrum of a specimen of ^{137}Cs is shown. The resolution of the counters at this line is less than R = 1.2 percent. The dependence is shown of the constant capture time on the electrical field intensity. 2 fig. 13 ref. Received by editors, 5 Nov 1971.

1/1

APPROVED FOR RELEASE: 09/01/2001 CIA-RDP86-00513R002203310017-2"

"APPROVED FOR RELEASE: 09/01/2001 CIA-RDP86-00513R002203310017-2

USSR UDC 53.07/.08+53.001.5

AFANAS'YEVA, N. P., NOVIKOV, S. R., STROKAN, N. B., TISNEK, N. I.

"On the Resolving Power of Silicon Lithium-Drift Detectors"

V sb. Razvitiye yadern. i izotopn. priborostr. Tr. Konferentsii spetsialistov stran-chlenov SEV, 1969. Ch. 1 (Development of Nuclear and Isotope Instrument Building. Works of the Conference on Specialists of Member Countries of the Council for Mutual Economic Aid, 1969. Part 1 -- Collection of Works), Moscow, 1970, pp 199-206 (from RZh-Fizika, No 1, Jan 71, Abstract No 1A694)

Translation: The effect of specific resistance, the lifetime of nonbasic current carriers, and the dislocation density of p-type silicon on the energy resolution of detectors made by the lithium-drift method was investigated. It is shown that in detectors with good compensation by lithium the energy resolution is determined by the average magnitude and spread of the lifetime over the area of the Si plate. In the case of insufficiently good compensation, fluctuations in the process of charge accumulation and, consequently, the energy resolution will also depend on fluctuations in the electric field. It was observed that the magnitude

APPROVED FOR RELEASE: 09/01/2001 CIA-RDP86-00513R002203310017-2"

"APPROVED FOR RELEASE: 09/01/2001 CIA-RDP86-00513R002203310017-2

USSR

AFANAS'YEVA, N. P., et al, Razvitiye yadern. i izotopn. priborostr. Tr. Konferentsii spetsialistov stran-chlenov SEV, 1969. Ch. 1, Moscow, 1970, pp 199-206

of fluctuations in the process of charge accumulation increases with an increase in the heterogeneity of the specific resistance and also with time if the detectors are kept at room temperature without reverse grid bias. Satisfactory agreement was observed between the measured value of the noise and the calculated level of shot noise produced by the flow of current caused by volume or surface regeneration of pairs (i.e., for the case in which surface conductivity can be neglected). The magnitude of the contribution of excess noises to the energy resolution is linearly dependent on the leakage current (slope 20 kev/μa). It is hypothesized that leakage currents arise as a result of "decompensation" of the material (for example, close to the surface). In studying the effect of the material parameters on intermediate stages in making the detectors, it was observed that the leakage current of a diffusion pn-junction increases with an increase in dislocation density.

2/2

APPROVED FOR RELEASE: 09/01/2001 CIA-RDP86-00513R002203310017-2"

"APPROVED FOR RELEASE: 09/01/2001 CIA-RDP86-00513R002203310017-2

USSR

UDC 53.07/.08+53.001.5

AFANAS'YEV, V. F., AFANAS'YEVA, N. P., STROKAN, N. B., TISNEK, N. I.

"The Effect of Silicon Parameters on the Characteristics of Surface-Barrier Gold-Silicon Detectors"

V sb. Razvitiye yadern. i izotopn. priborostr. Tr. Konferentsii spetsialistov stran-chlenov SEV, 1969, Ch. 1 (Development of Nuclear and Isotope Instrument Building. Works of the Conference of Specialists of Member Countries of the Council for Mutual Economic Aid, 1969, Part 1 -- Collection of Works), Moscow, 1970, pp 229-234 (from RZh-Fizika, No 1, Jan71, Abstract No 1A688)

Translation: The effect of specific resistance, lifetime of nonbasic current carriers, dislocation density, and heterogeneity and the distribution of these parameters on the characteristics of surface-barrier Si-detectors were investigated for the purpose of producing detectors with a large working area and a high energy resolution. In making the detectors, particular attention was given to lowering surface leakage at the boundaries of the gold contact. Measurements of

1/2

APPROVED FOR RELEASE: 09/01/2001 CIA-RDP86-00513R002203310017-2"

"APPROVED FOR RELEASE: 09/01/2001 CIA-RDP86-00513R002203310017-2

USSR

AFANAS'YEV, V. F., et al, Razvitiye vadern. i izotopn. priborostr. Tr. Konferentsii spetsialistov stran-chlenov SEV, 1969, Ch. 1, Moscow, 1970, pp 229-234

the energy distribution of the detectors as a function of the heterogeneity of silicon in terms of the lifetime of the carriers and specific resistance are given. In studying the effect of dislocation density N_d on reverse current and the working voltage of surface-barrier detectors, it was observed that an increase in N_d leads to a rise in leakage current that also depends on the value of the electric field in the surface barrier. At a low dislocation density $N_d \simeq 10^3$ cm^{-3}, the leakage currents vary very little with the electric field, whereas for $N_d \simeq 5.10^4$-10^5 cm^{-3}, these changes are more considerable. Such relationships are explained by the rise of microplasmas at the dislocations. On the basis of these results criteria were established for selecting silicon of domestic production with which one could obtain detectors with an energy resolution of 0.5, 017, and 1.1% (for E^{α} = 5 Mev) with a working area of 2,3, and 5 cm^2 respectively.

2/2

APPROVED FOR RELEASE: 09/01/2001 CIA-RDP86-00513R002203310017-2"

"APPROVED FOR RELEASE: 09/01/2001 CIA-RDP86-00513R002203310017-2

UNCLASSIFIED

TITLE--COMPOSITION AND SOME PHYSICOCHEMICAL PROPERTIES OF SLAGS FROM THE ELECTROTHERMAL PRODUCTION OF PHOSPHORUS -U-

PROCESSING DATE--13NOV70

AUTHOR-(02)-TISSEN, G.I., TSIMERMANIS, F.

COUNTRY OF INFO--USSR

SOURCE--KHIM. PROM. (MOSCOW) 1970, 46(3), 200-2

DATE PUBLISHED-------70

SUBJECT AREAS--CHEMISTRY

TOPIC TAGS--SLAG, ELECTRIC FURNACE, CHEMICAL PRODUCTION, PHOSPHOROUS, FLUID VISCOSITY, SURFACE TENSION, FLUID DENSITY, SILICA, CALCIUM OXIDE

CONTROL MARKING--NO RESTRICTIONS

DOCUMENT CLASS--UNCLASSIFIED

PROXY REEL/FRAME--3006/1005

STEP NO--UR/0064/70/046/043/0200/0202

CIRC ACCESSION NO--AP0134717

UNCLASSIFIED

APPROVED FOR RELEASE: 09/01/2001 CIA-RDP86-00513R002203310017-2"

"APPROVED FOR RELEASE: 09/01/2001 CIA-RDP86-00513R002203310017-2

U20

UNCLASSIFIED

CIRC ACCESSION NO--AP0134717 PROCESSING DATE--13NOV70

ABSTRACT/EXTRACT--(U) GP-0- ABSTRACT. THE LIQ. SLAGS FROM THE ELECTROTHERMAL PRODUCTION OF P CONTAIN MGO 2.5-4.3, AL SUB2 O SUB3 1.2-3.6, F 2.0-2.8, FEO 0.1-0.3, S 0.2-0.5, K SUB2 O PLUS NA SUB2 O 0.7-1.2, P SUB2 O SUB5 0.2-1.4, MNO UP TO 0.35, CAO 45-6PERCENT, AND THE BALANCE SIO SUB2; THEIR VISCOSITY DECREASES FROM SIMILAR TO 200 P AT 1150DEGREES TO SIMILAR TO 10 P AT 1350-1400DEGREES. THE SURFACE TENSION DECREASES FROM 400 DYNES-CM. AT 1250DEGREES TO 320-50 DYNES-CM AT 1450DEGREES; THE D. AT 1350-1450DEGREES IS 2.67-2.70 G-CM PRIME3. THE ETA OF VITRIFIED SLAGS DECREASES FROM 10 PRIME11 TO 10 PRIME9 AND THEN INCREASES TO 3 TIMES 10 PRIME11 P WHEN THE TEMP. IS INCREASED FROM 700 TO 800 TO 830DEGREES, RESP.

UNCLASSIFIED

APPROVED FOR RELEASE: 09/01/2001 CIA-RDP86-00513R002203310017-2"

"APPROVED FOR RELEASE: 09/01/2001 CIA-RDP86-00513R002203310017-2

UNCLASSIFIED

TITLE--EXPERIMENTAL DETERMINATION OF STRESSES IN RUBBER PIECES ACCORDING TO HARDNESS -U-

PROCESSING DATE--23OCT70

AUTHOR-(02)-KOLCHENKO, A.V., TITARENKO, A.I.

COUNTRY OF INFO--USSR

SOURCE--KHIM. NEFT. MASHINOSTR. 1970, (2), 41-2

DATE PUBLISHED-------70

SUBJECT AREAS--MATERIALS

TOPIC TAGS--ELASTOMER, COMPRESSIVE STRESS, SHOCK ABSORBER, HARDNESS, DRILLING MACHINERY/(U)IRP1124 RUBBER ELASTOMER, (U)IRP1294 RUBBER ELASTOMER, (U)IRP1226 RUBBER ELASTOMER

CONTROL MARKING--NO RESTRICTIONS

DOCUMENT CLASS--UNCLASSIFIED

PROXY REEL/FRAME--1997/0734

STEP NO--UR/0314/70/000/002/0041/0042

CIRC ACCESSION NO--AP0119641

UNCLASSIFIED

APPROVED FOR RELEASE: 09/01/2001 CIA-RDP86-00513R002203310017-2"

"APPROVED FOR RELEASE: 09/01/2001 CIA-RDP86-00513R002203310017-2

029

CIRC ACCESSION NO--AP0119641 UNCLASSIFIED

PROCESSING DATE--23OCT7C

ABSTRACT/EXTRACT--(U) GP-0- ABSTRACT. THE STRESSES EXERTED ON RUBBER ELASTOMER COMPONENTS (SUCH AS GASKETS OR SHOCK ABSORBERS USED IN THE OIL DRILLING INDUSTRY) OPERATING UNDER TENSION OR COMPRESSION WERE EVALUATED BY MEASURING THE HARDNESS BY MEANS OF A PUNCTURE HARDNESS GAGE TI. SINCE THE HARDNESS OF ELASTOMERS WAS PROPORTIONAL TO THE APPLIED STRESS, THE GAGE WAS CALIBRATED AND APPROPRIATE GRAPHS WERE USED FOR MEASUREMENTS OF COMPRESSION STRESSES IN IRP 1124, IRP 1294, IRP 1226, AND 93 RUBBER ELASTOMERS.

UNCLASSIFIED

APPROVED FOR RELEASE: 09/01/2001 CIA-RDP86-00513R002203310017-2"

"APPROVED FOR RELEASE: 09/01/2001 CIA-RDP86-00513R002203310017-2

USSR

TITARENKO, B. P. UDC: 519.2

"A Variation Method of Estimating Minimum Variance Under Conditions of 'Contamination'"

Tr. 4-y Zimn. shkoly po mat. programmir. i smezh. voprosam, 1971, vyp. 2 (Works of the Fourth Winter School on Mathematical Programming and Related Problems, 1971, No 2), Moscow, 1971, pp 180-196 (from RZh-Kibernetika, No 5, May 72, Abstract No 5V111)

Translation: The author considers the problem of estimating the parameter θ with respect to an independent sample $x_1, \ldots, x_n$ from a distribution with density $p_\varepsilon(x,\theta) = (1-\varepsilon)p(x,\theta) + \varepsilon h(x,\theta)$, where $p(x,\theta)$ is a known family of densities and $h(x,\theta)$ is a "contaminated" density which belongs to a predetermined class $\mathcal{H}$. The estimate $\hat{\theta}$ is sought in the form of a solution of the equation $n^{-1}\Sigma\omega(x_i,\theta)=0$, and the problem consists in finding the function ω for which $\inf_{\omega} \sup_{p_\varepsilon} M(\hat{\theta}-\theta)^2$ is realized. This model is a generalization of the Huber model (RZh-Mat, 1965, 12V89) in which θ was the shift parameter. In the "symmetric" case where for any $h \in \mathcal{H}$ and $k > 0$

1/2

APPROVED FOR RELEASE: 09/01/2001 CIA-RDP86-00513R002203310017-2"

"APPROVED FOR RELEASE: 09/01/2001 CIA-RDP86-00513R002203310017-2

USSR

TITARENKO, B. P., Tr. 4-y Zimn. shkoly po mat. programmir. i smezhn. voprosam, 1971, vyp. 2, Moscow, 1971, pp 180-196

where

$$\int_{\Gamma_+(k)} h(x)\,dx = \int_{\Gamma_-(k)} h(x)\,dx,$$

$$\Gamma_+(k) = \{x : p'_\theta(x,\theta)/p(x,\theta) > k\}, \quad \Gamma_-(k) = \{x : p'_\theta(x,\theta)/p(x,\theta) < -k\},$$

the sought function takes the form $\omega(x,\theta) = p'(x,\theta)/p(x,\theta)|_{\Gamma_+} = k$, $= -k$ when $x \in G$, $\Gamma_+(k)$, $\Gamma_-(k)$ respectively; here G is the complementary minor to $\Gamma_+(k) \cup \Gamma_-(k)$, k is determined from some equation and depends on ε. Analogous results are also found without the condition of "symmetricity". D. Chibisov.

2/2

APPROVED FOR RELEASE: 09/01/2001 CIA-RDP86-00513R002203310017-2"

"APPROVED FOR RELEASE: 09/01/2001 CIA-RDP86-00513R002203310017-2

USSR

UDC 519.281

TITARENKO, B. P.

"Statistical Estimation Under "Plugged" Conditions"

Tr. 3 Zimi. Shkoly po Mat. programmir. i Smezhn. Vopr., 1970, Vyp 3 [Works of Third Winter School on Mathematical Programming and Related Problems, 1970, No 3], Moscow, 1970, pp 641-649, (Translated from Referativnyy Zhurnal, Kibernetika, No 10, 1971, Abstract No 10 V225).

NO ABSTRACT:

1/1

APPROVED FOR RELEASE: 09/01/2001 CIA-RDP86-00513R002203310017-2"

"APPROVED FOR RELEASE: 09/01/2001 CIA-RDP86-00513R002203310017-2

UNCLASSIFIED

DEPENDENCE OF RESIDUAL STRESSES IN A GLASS FIBER REINFORCED PLASTIC BINDER ON HARDENING CONDITIONS -U-

PROCESSING DATE--13NOV70

AUTHOR-(05)-ABIBOV, A.L., TITARENKO, G.S., KORINDVASOVA, M.YU., ZHERDEV, YU.V., ZAKHAROV, A.M.

COUNTRY OF INFO--USSR

SOURCE--MEKH. POLIM. 1970, 6(1), 176

DATE PUBLISHED--------70

SUBJECT AREAS--MATERIALS

TOPIC TAGS--GLASS FIBER, REINFORCED PLASTIC, RESIDUAL STRESS, POLYMER BINDER/(U)EDT10 PLASTIC

CONTROL MARKING--NO RESTRICTIONS

DOCUMENT CLASS--UNCLASSIFIED

PROXY REEL/FRAME--1989/0516

STEP NO--UR/0374/70/006/001/0176/0176

CIRC ACCESSION NO--AP0107121

UNCLASSIFIED

APPROVED FOR RELEASE: 09/01/2001 CIA-RDP86-00513R002203310017-2"

"APPROVED FOR RELEASE: 09/01/2001 CIA-RDP86-00513R002203310017-2

UNCLASSIFIED

CIRC ACCESSION NO--AP0107121 PROCESSING DATE--13NOV70

ABSTRACT/EXTRACT--(U) GP-0- ABSTRACT. THE RESIDUAL STRESSES IN AN EDT-10 COMPN. (I) WERE STUDIED AS A FUNCTION OF THE HARDENING TEMP. (UNDER ISOTHERMAL CONDITIONS) AND OF THE EXPTL. TEMP. FOLLOWING SUPPLEMENTAL HEATING. THE NO. OF ISOCHROMES STEADILY DECREASED WITH HEATING REACHING 0 AT A TEMP. (FIXED STRUCTURE TEMP.) WHICH EXCEEDED THE HARDENING TEMP. BY 8-10DEGREES, SUGGESTING THE COMPLETE DISAPPEARANCE OF STRAIN IN I. THE HARDENING TEMP. WAS PROPORTIONAL TO THE FIXED STRUCTURE TEMP. AT 85-180DEGREES.

UNCLASSIFIED

APPROVED FOR RELEASE: 09/01/2001 CIA-RDP86-00513R002203310017-2"

"APPROVED FOR RELEASE: 09/01/2001 CIA-RDP86-00513R002203310017-2

USSR

UDC 615.277.3.011.5

PROTSENKO, L. D., and TITARENKO, I. P., Kiev Scientific Research Institute of Pharmacology and Toxicology

"Study of the Hydrolysis Products of Some Ethylenephosphoamides"

Moscow, Khimiko-Farmatsevticheskiy Zhurnal, Vol 6, No 1, Jan 72, pp 51-55

Abstract: Hydrolysis of N-benzyl-N',N'',N'''-diethylenetriamide of phosphoric acid (benzo-TEP) and tetraethyleneamide of p-phenylenediphosphoric acid was studied by thiosulfate determination of ethyleneimine groups and by paper chromatography. After 23 days the entire sample of benzo-TEP was converted to N-benzoyl-N',N''-bis(2-hydroxyethyl)triamide and benzamide of phosphoric acid. The conversion began at about the third day of the experiment, both products accumulating at the expense of the starting material. Evidently the hydrolysis occurs in two directions: a break in the N-P bond forming the benzamide and addition of water to the two ethyleneimine groups. Most of the benzo-TEP (70%) is converted to the benzamide by the first route. Hydrolysis of p-phenylenediphosphoric acid is faster, all of the starting material being fully converted after 6 days to a single product — N,N',N'',N'''-tetra-(2-hydroxyethyl)-tetramide of p-phenylenediphosphoric acid.

1/1

APPROVED FOR RELEASE: 09/01/2001 CIA-RDP86-00513R002203310017-2"

"APPROVED FOR RELEASE: 09/01/2001 CIA-RDP86-00513R002203310017-2

USSR

UDC: 622.243.144.4

SACHKOV, V. V., KHARIV, I. Yu., TITARENKO, N. Kh., FESENKO, N. N., YAREMENKO, V. A., Poltava Division of Ukrainian Scientific Research Institute for Geological Prospecting

"Ultrasonic Treatment of Drilling Solution in Order to Restore its Structural and Mechanical Properties"

Moscow, Bureniye, No 7, 1973, pp 18-21.

Abstract: A method is studied for restoration of the structural and mechanical properties of solutions by ultrasonic treatment, allowing the restoration of lost properties to be accelerated, while reducing the consumption of materials and expenditures of labor, particularly manual labor, related to the preparation of chemical reagents and treatment of the solution with the reagents. Results are presented from restoration and improvement of these properties during ultrasonic processing directly at drilling sites. The mechanism of action of the ultrasound on natural and artificial solutions is described. The Institute has developed several designs of hydrodynamic vortex-type radiators for production ultrasonic treatment of solutions. These radiators are simple in design and reliable in operation. They can be driven by either centrifugal or piston-type pumps. The mechanism of action of the ultrasound consists in effective

1/2

APPROVED FOR RELEASE: 09/01/2001 CIA-RDP86-00513R002203310017-2"

"APPROVED FOR RELEASE: 09/01/2001 CIA-RDP86-00513R002203310017-2

USSR

Sachkov, V. V., Kahriv, I. Yu., Titarenko, N. Kh., Fesenko, N. N., Yaremenko, V. A., Moscow, Bureniye, No 7, 1972, pp 18-21.

dispersion of particles of clay materials, increasing their number per unit volume and thus increasing the surface of the active solid phase and forming a better developed, stronger coagulation structure in the solutions.

2/2

APPROVED FOR RELEASE: 09/01/2001 CIA-RDP86-00513R002203310017-2"

"APPROVED FOR RELEASE: 09/01/2001 CIA-RDP86-00513R002203310017-2

USSR

UDC 621.762.5:661.882.661:665.1

PETROVA, A. M., RADOMYSEL'SKIY, I. D., and TITARENKO, S. V., Institute of Problems of Materials Science, Academy of Sciences Ukrainian SSR

"Structure Formation of $Ti-Cr_3C_2$ During Annealing"

Kiev, Poroshkovaya Metallurgiya, No 1, Jan 74, pp 85-89

Abstract: Structure formation was investigated and composition of the carbide phases was determined during annealing of a Ti-base composite ($Ti-Cr_3C_2$) under conditions similar to those used for sintering titanium alloys. It was shown that in the process of annealing extruded samples at 950-1250° C, the chromium carbide dissolves and a new phase -- titanium carbide -- is precipitated. This new phase contained no carbon, which was explained by the non-equilibrium state of the matrix. From determination of phase-structure microhardness after annealing, it was observed that a minimum value of titanium-base microhardness occurs on samples annealed at 1150° C when almost 14% Cr is dissolved in the titanium. Three figures, one table, six bibliographic references.

1/1

APPROVED FOR RELEASE: 09/01/2001 CIA-RDP86-00513R002203310017-2"

"APPROVED FOR RELEASE: 09/01/2001 CIA-RDP86-00513R002203310017-2

UNCLASSIFIED

TITLE--WEAR RESISTANCE OF SINTERED METAL CONSTRUCTION MATERIALS SUBJECTED TO DRY FRICTION -U-

PROCESSING DATE--13NOV70

AUTHOR-(04)-TITARENKO, S.V., ARAKELYAN, N.A., RADOMYSELSKIY, I.D., POLOTAY, V.V.

COUNTRY OF INFO--USSR

SOURCE--POROSHKOVAYA MET., FEB. 1970, (2), 80-84

DATE PUBLISHED----FEB 70

SUBJECT AREAS--MATERIALS

TOPIC TAGS--CHROMIUM STEEL, WEAR RESISTANT SINTERED ALLOY, BALL BEARING STEEL, ANTIFRICTION MATERIAL, CARBON STEEL

CONTROL MARKING--NO RESTRICTIONS

DOCUMENT CLASS--UNCLASSIFIED

PROXY REEL/FRAME--2000/0123

STEP NO--UR/0226/70/000/002/0080/0084

CIRC ACCESSION NO--AP0123895

UNCLASSIFIED

APPROVED FOR RELEASE: 09/01/2001 CIA-RDP86-00513R002203310017-2"

"APPROVED FOR RELEASE: 09/01/2001 CIA-RDP86-00513R002203310017-2

UNCLASSIFIED

ACCESSION NO--AP0123895 PROCESSING DATE--13NOV70

ABSTRACT/EXTRACT--(U) GP-0- ABSTRACT. THE FRICTION AND WEAR CHARACTERISTICS OF A NUMBER OF CR AND C STEEL SINTERED PARTS WERE STUDIED AND COMPARED WITH THE CORRESPONDING CHARACTERISTICS OF CONVENTIONAL BALL BEARING STEEL PARED WITH A HIGH SPEED CUTTING STEEL UNDER CONDITIONS OF DRY FRICTION. THE COEFF. OF FRICTION FELL AND THE WEAR INCREASED WITH INCREASING SLIP VELOCITY IN EVERY CASE; HOWEVER, THE SINTERED CR STEEL YIELDED THE HIGHEST DEGREE OF WEAR RESISTANCE. UP TO A CERTAIN LIMIT, THE ANTI FRICTION PROPERTIES OF THE SINTERED STEELS INCREASED WITH INCREASING C CONTENT.

UNCLASSIFIED

APPROVED FOR RELEASE: 09/01/2001 CIA-RDP86-00513R002203310017-2"

"APPROVED FOR RELEASE: 09/01/2001 CIA-RDP86-00513R002203310017-2

USSR

UDC 669.721.042.6(088.8)

TAGAKIN, A. N., KORZNIKOV, V. M., BELKIN, G. I., ALONTSEV, V. S., PROVODNIKOV, A. A., MAZUROV, G. A., TITAYEV, I. A., PUTINA, O. A., MATSUY, N. V., BOCHKAREV, G. V., NAGIBIN, V. M.

"Method of Processing of Magnesium Ingots"

USSR Author's Certificate No 313908, filed 16/03/70, published 10/11/71, (Translated from Referativnyy Zhurnal, Metallurgiya, No 5, 1972, Abstract No 5 G248 P by G. Svodtseva).

Translation: A method of processing of Mg ingots including transportation, cooling, mechanical working, washing, etching, drying and covering with a protective layer is proposed. In order to reduce the labor expenditures for the process and process time, the ingots are subjected to forced cooling to 450-100°, mechanically worked during transportation, and washed at 350-100°. This reduces labor consumption, decreases the time of the process, and increases the productivity of labor by 40-80%.

1/1

APPROVED FOR RELEASE: 09/01/2001 CIA-RDP86-00513R002203310017-2"

"APPROVED FOR RELEASE: 09/01/2001 CIA-RDP86-00513R002203310017-2

1/3 020 UNCLASSIFIED PROCESSING DATE--04DEC70

TITLE--A TEN YEAR EXPERIMENT IN TREPANOIRIDENCLEISIS OPERATION IN GLAUCOMA CASES -U-

AUTHOR-(02)-RADZIKHOVSKIY, B.L., TITENKO, K.S.

COUNTRY OF INFO--USSR

SOURCE--OFTALMOL ZH 25(2): 111-117. 1970.

DATE PUBLISHED--------70

SUBJECT AREAS--BIOLOGICAL AND MEDICAL SCIENCES

TOPIC TAGS--EYE DISEASE, VISUAL DEFECT, BIOLOGIC OPERATION

CONTROL MARKING--NO RESTRICTIONS

DOCUMENT CLASS--UNCLASSIFIED

PROXY FICHE NO----FD70/605015/E12 STEP NO--UR/0601/70/025/002/0111/0117

CIRC ACCESSION NO--AP0140629

UNCLASSIFIED

APPROVED FOR RELEASE: 09/01/2001 CIA-RDP86-00513R002203310017-2"

"APPROVED FOR RELEASE: 09/01/2001 CIA-RDP86-00513R002203310017-2

2/3 020 UNCLASSIFIED PROCESSING DATE--04DEC70

CIRC ACCESSION NO--AP0140629

ABSTRACT/EXTRACT--(U) GP-0- ABSTRACT. IMMEDIATE AND REMOTE RESULTS OBTAINED FROM ANTIGLAUCOMATOUS OPERATION OF TREPANOIRIDENCLEISIS ARE ANALYZED. IMMEDIATE RESULTS WERE STUDIED ON 247 PATIENTS WITH PRIMARY AND SECONDARY GLAUCOMA. IN CASE OF PRIMARY GLAUCOMA THE OPERATION OF TREPANOIRIDENCLEISIS WAS PERFORMED AT ALL STAGES OF GLAUCOMA AND IN THE PRESENCE OF INDICATIONS TO THIS OPERATION; OF THEM 56 PATIENTS WERE SUBJECTED TO THE OPERATION DURING ACUTE ATTACK OF GLAUCOMA. IMMEDIATELY AFTER THE OPERATION NORMILIZATION OF INTRAOCULAR TENSION WAS RECORDED IN 90.6PERCENT, FUNCTIONS OF THE EYE IMPROVED IN 42.2PERCENT, AND NO CHANGE WAS ACHIEVED IN 41PERCENT OF CASES. REMOTE RESULTS (1-10 YR FOLLOW UP) WERE ANALYZED IN 147 PATIENTS WITH PRIMARY GLAUCOMA AND 13, WITH SECONDARY GLAUCOMA. APART FROM THIS, RESULTS OF OPERATION WERE ANALYZED IN PATIENTS WITHTHE FOLLOW UP PERIOD RANGING FROM 1 TO 4 YR AND FROM 5 TO 10 YR FOLLOWING OPERATION. WITHIN THE 1ST 4 YR FOLLOWING OPERATION A STABLE NORMALIZATION OF INTRAOCULAR TENSION PERSISTED IN 84.6PERCENT, AND 5-10 YR LATER, IN 82.6PERCENT. IN MORE REMOTE TERMS OF OBSERVATION THE NUMBER OF PATIENTS WITH THE IMPAIRMENT OF VISUAL FUNCTIONS BECAME HIGHER. A STUDY WAS ALSO CARRIED OUT IN RESPECT TO THE STATE OF VISUAL FUNCTIONS IN REMOTE TERMS, DEPENDING ON THE DEGREE OF COMPENSATION OF GLAUCOMATOUS PROCESS, IN 122 PATIENTS, WHEREBY IT WAS STATED THAT VISUAL FUNCTIONS BECAME LOWER, AND A SUGGESTION IS EXPRESSED CONCERNING THE CAUSES OF VISUAL FUNCTION IMPAIRMENT IN PATIENTS WITH NORMALIZED INTRAOCULAR TENSION.

UNCLASSIFIED

APPROVED FOR RELEASE: 09/01/2001 CIA-RDP86-00513R002203310017-2"

"APPROVED FOR RELEASE: 09/01/2001 CIA-RDP86-00513R002203310017-2

3/3 020 UNCLASSIFIED PROCESSING DATE--04DEC70

CIRC ACCESSION NO--AP0140629

ABSTRACT/EXTRACT--THE STUDY CARRIED OUT ALLOWED TO STATE THAT THE OPERATION OF TREPANOIRIDENCLEISIS RATHER EFFECTIVE AS TO ITS HYPOTENSIVE ACTION, BUT, AS ALL OTHER ANTIGLAUCOMATOUS OPERATIONS, NOT IN ALL CASES IT CAN PREVENT THE IMPAIRMENT OF VISUAL FUNCTIONS. FACILITY: DEP. EYE DIS. CHERNOVTSY MED. INST., CHERNOVTSY, USSR.

UNCLASSIFIED

APPROVED FOR RELEASE: 09/01/2001 CIA-RDP86-00513R002203310017-2"

"APPROVED FOR RELEASE: 09/01/2001 CIA-RDP86-00513R002203310017-2

USSR UDC 669.013:539.319

KRISHTAL, M. A., TITENSKIY, E. G., and NIKOL'SKIY, N. N., Tula Polytechnic Institute

"Investigation of Temperature Dependences of Modulus of Elasticity and Decrement of Vibrations for the Study of Phase Changes in Cast Irons"

Sb. nauchn. tr. Perm. politekhn. in-t (Collection of Scientific Works of Perm' Polytechnic Institute), 1970, No 73, pp 45-48 (from RZh-Metallurgiya, No 3, Mar 71, Abstract No 31896 by N. Fonshteyn)

Translation: The dynamic modulus of elasticity E and decrement of vibrations δ of white irons (2-3.2% C, 0.7-2.2% Si) were studied in the 20-1050° range. A nonlinear decrease in E with temperature was found. The first inflection on the curve E = f(T) is treated as the recrystallization threshold and the transition to the linear sector as the end of the eutectoid transformation. The curve δ = f(T), which reveals a growth of internal friction with temperature elevation, displays an inflection corresponding to the beginning of the phase change and a relaxation maximum whose formation temperature is treated as the completion of the transition. On the basis of results of E = f(T) and δ = f(T) measurements during heating and cooling a conclusion is reached on the effect of C and Si on the magnitude of the phase recrystal-

APPROVED FOR RELEASE: 09/01/2001 CIA-RDP86-00513R002203310017-2"

"APPROVED FOR RELEASE: 09/01/2001 CIA-RDP86-00513R002203310017-2

USSR

KRISHTAL, M. A., et al., Sb. nauchn. tr. Perm. politekhn. in-t, 1970, No 73, pp 45-48

lization range. The value of the effective activation energy of the process responsible for formation of the maximum is 69,5000 cal/g-atom, which practically coincides with the activation energy of austenite self-diffusion (68,000-74,000 cal/g-atom). Two illustrations. Bibliography with three titles.

2/2

APPROVED FOR RELEASE: 09/01/2001 CIA-RDP86-00513R002203310017-2"

"APPROVED FOR RELEASE: 09/01/2001 CIA-RDP86-00513R002203310017-2

1/2 032 UNCLASSIFIED PROCESSING DATE--04DEC70

TITLE--CHARACTERISTICS OF THE TEMPERATURE DEPENDENCE OF THE ELASTIC MODULUS ADN THE VIBRATION DECREMENT OF HIGH CARBON STEELS -U-

AUTHOR-(03)-KRISHTAL, M.A., TITENSKIY, E.G., NIKOLSKIY, N.N.

COUNTRY OF INFO--USSR

SOURCE--FIZIKA METALLOV I METALLOVEDENIE, FEB. 1970, 29, (2), 442-445

DATE PUBLISHED----FEB70

SUBJECT AREAS--MATERIALS

TOPIC TAGS--ELASTIC MODULUS, TEMPERATURE DEPENDENCE, HIGH CARBON STEEL, VIBRATION DAMPING, AUSTENITE, ALLOY PHASE TRANSFORMATION, HIGH TEMPERATURE EFFECT/(U)U10 CARBON STEEL

CONTROL MARKING--NO RESTRICTIONS

DOCUMENT CLASS--UNCLASSIFIED

PROXY REEL/FRAME--3003/0342 STEP NO--UR/0126/70/029/002/0442/0445

CIRC ACCESSION NO--AP0129574

UNCLASSIFIED

APPROVED FOR RELEASE: 09/01/2001 CIA-RDP86-00513R002203310017-2"

"APPROVED FOR RELEASE: 09/01/2001 CIA-RDP86-00513R002203310017-2

2/2 032 UNCLASSIFIED PROCESSING DATE--04DEC70

CIRC ACCESSION NO--AP0129577

ABSTRACT/EXTRACT--(U) GP-0- ABSTRACT. THE TEMP. DEPENDENCE OF THE ELASTIC MODULUS AND DAMPING DECREMENT OF C STEEL U10 IN THE NORMALIZED STATE WERE STUDIED IN A STANDARD APPARATUS SPECIALLY ADAPTED TO FACILITATE MEASUREMENTS AT 1200DEGREESC. PARTICULARLY COMPLEX CHANGES IN THESE PARAMETERS AT HIGH TEMP. REFLECTED SMALL CHANGES TAKING PLACE IN THE STRUCTURE AND SUBSTRUCTURE OF THE AUSTENITE; IN THIS REPSECT THE METHOD HAD A MUCH GREATER SENSITIVITY THAN CONVENTIONAL TECHNIQUES. AN ANOMALOUS RISE IN THE MODULUS AT 1000-1050DEGREESC WAS ATTRIBUTED TO THE DISSOLUTION OF IMPURITIES (CARBIDES AND NITRIDES AT GRAIN BOUNDARIES).

UNCLASSIFIED

APPROVED FOR RELEASE: 09/01/2001 CIA-RDP86-00513R002203310017-2"

"APPROVED FOR RELEASE: 09/01/2001 CIA-RDP86-00513R002203310017-2

TITINER E.M.

AA9049690

UR 0482

Soviet Inventions Illustrated, Section I Chemical, Derwent, 6-69

229277 HEAT AND SOUND-INSULATING MATERIALS based on synthetic resins and expanded perlite contain 0.5-2.5% by weight of the resin of a quaternary ammonium base having long-chain hydrocarbon radicals, such as triisoamylamine or alkamon. The resin content of the material can be reduced, and its strength and moisture-resistance are enhanced. Epoxy and coumarone resins are pref. used. If the resin is introduced into the material in solution, the ammonium additive is dissolved in a threefold amount of the same solvent and admixed to the resin solution. If the resin is mixed with the perlite in the undissolved state, the ammonium additive is dissolved in water and sprinkled onto the mixt. When epoxy resin is used in an amount of 36 kg. per 1 $m.^3$ of the product the addition of 1% (by wt. of the resin) of

20 (5) 1/26

1/2 1947 2747 7

APPROVED FOR RELEASE: 09/01/2001 CIA-RDP86-00513R002203310017-2"

"APPROVED FOR RELEASE: 09/01/2001 CIA-RDP86-00513R002203310017-2

AA9049690

ammonium compound enhances the strength by 40 - 50%. On the other hand, if the same strength is required, the amount of the resin can be reduced to 18 kg. per 1 $m.^3$ of the material. 28.4.66. as 1073106/23-5, TITINER, E.M. et al. Building Materials Res. Inst. (18.2.69) Bul. 32/17.10.68. Class 80b/37a, Int. Cl. C 04b/E04b.

DJ

2/2 1947 2748

APPROVED FOR RELEASE: 09/01/2001 CIA-RDP86-00513R002203310017-2"

"APPROVED FOR RELEASE: 09/01/2001 CIA-RDP86-00513R002203310017-2

AP0014287 UR 0297

PRIMARY SOURCE: Antibiotiki, 1969, Vol 14, Nr 12, pp 1059-1063

DATA OF COOPERATIVE CLINICAL TRIALS OF ANTITUMOR ANTIBIOTIC RUBOMYCIN

V. K. Kachalov, N. G. Blokhina, A. M. Garin, M. L. Gershanovich, L. G. Kovaleva, G. V. Kruglova, Yu. I. Lorie, V. F. Savinova, N. V. Strelnikhina, L. K. Vozny, L. V. Moroz, V. A. Grishko, N. I. Karev, R. N. Kuchkarev, M. P. Lichinitser, Yu. Kh. Magomedov, V. V. Jitievskaya, V. A. Shkarenkov, D. S. Aidinyan, V. G. Isaev, L. G. Kurmashev, F. A. Monul, K. I. Pleskov, L. G. Ryazanova

National Center for Tumor Chemotherapy, Institute for Experimental and Clinical Oncology of Academy of Medical Sciences, USSR, Moscow

A new antitumor antibiotic rubomycin was studied in clinics on cases with various malignant tumors. The preparation was most effective in acute leucosis (objective effect was observed in 36 out of 51 patienets), tumoral reticuloses (objective effect was observed in 16 out of 36 patients) and trophoblastic disease (objective effect was observed in 21 out of 40 patients). The preparation had a low toxic effect. Suppression of blood formation was moderate.

1/1

19581297

APPROVED FOR RELEASE: 09/01/2001 CIA-RDP86-00513R002203310017-2"

"APPROVED FOR RELEASE: 09/01/2001 CIA-RDP86-00513R002203310017-2

AP0016872

UR 0170

PRIMARY SOURCE: Inzhenerno-Fizicheskiy Zhurnal, 1969, Vol 16, Nr 5, pp 847-853

G. G. Schastlivyi, A. I. Titko and V. N. Nikolaev: One temperature field problem

Summary

The problem on determining the amount of heat removed into the cooling channel arbitrarily placed in a massive body with internal heat generation is considered for external heat transfer. The problem is solved for a hollow cylinder with prescribed intensity of internal heat generation and intensity of volume sink being determined. Steady-state heat conduction equation for transverse cylinder section with regard for the cooling channel in the single. Heaviside η-function is solved by the method of finite. Fourier transform on which basis the intensity of heat removal into the channel may be determined with the use of the Newton formula for external heat transfer. As an example, determination of the efficiency of water cooling of a plug of a turbogenerator with a power of 300 mW, in which the magnetic field causes essential inner losses, is presented.

1/1

19592012

APPROVED FOR RELEASE: 09/01/2001 CIA-RDP86-00513R002203310017-2"

"APPROVED FOR RELEASE: 09/01/2001 CIA-RDP86-00513R002203310017-2

AP9049746

UR 0170

AUTHORS: Schastlivyi, G. G., Titko, A. I., Nikolaev, V. N.

TITLE: One Temperature Field Problem

PRIMARY SOURCE: Inzhenerno-Fizicheskiy Zhurnal, 1969, Vol 16, Nr 5, pp 849-853

13
5
1
19

Summary

The problem on determining the amount of heat removed into the cooling channel arbitrarily placed in a massive body with internal heat generation is considered for external heat transfer. The problem is solved for a hollow cylinder with prescribed intensity of internal heat generation and intensity of volume sink being determined. Steady-state heat conduction equation for transverse cylinder section with regard for the cooling channel in the single. Heaviside η-function is solved by the method of finite. Fourier transform on which basis the intensity of heat removal into the channel may be determined with the use of the Newton formula for external heat transfer. As an example determination of the efficiency of water cooling of a plug of a turbogenerator with a power of 300 mW, in which the magnetic field causes essential inner losses, is presented.

02

1/1 1948 0055 21

APPROVED FOR RELEASE: 09/01/2001 CIA-RDP86-00513R002203310017-2"

"APPROVED FOR RELEASE: 09/01/2001 CIA-RDP86-00513R002203310017-2

USSR

UDC: None

GROSS, Ye. F. (deceased), SOKOLOV, N. S., and TITKOV, A. N.

"Phononless Annihilation Radiation of Indirect Excitons in Germanium Crystals With Isoelectronic Impurities"

Leningrad, Fizika Tverdogo Tela, vol 14, No 7, 1972, pp 2004-2007

Abstract: The results are given of experiments performed to study the luminescence of indirect excitons in germanium crystals with isoelectronic admixtures of Si and Sn at a temperature of 4.2° K. The DFS-12 spectrometer with a PbS photoresistor was used as a receiver for recording purposes. The luminescence spectrum of a germanium crystal containing an isoelectronic Si impurity of 0.7 at. % and a small amount ($5 \cdot 10^{14}$ per cc) of Sb donor material, in which the radiation bands typical of germanium with no silicon are clearly indicated is shown. These bands are the result of the annihilation of free as well as bonded excitons with phonon excitation. The effect on the spectrum of increasing the sensitivity of the equipment and of adding silicon to the crystal specimens is also noted. Investigations were made of the luminescence of free germanium crystal excitons containing Sn, in which phononless annihilation of free excitons with elastic dispersion of the Sn atoms was observed

1/2

APPROVED FOR RELEASE: 09/01/2001 CIA-RDP86-00513R002203310017-2"

"APPROVED FOR RELEASE: 09/01/2001 CIA-RDP86-00513R002203310017-2

USSR

GROSS, Ye. F., et al., Fizika Tverdogo Tela, vol 14, No 7, 1972, pp 2004-2007

The authors, associated with the A.F. Ioffe Physico-Technical Institute of Leningrad, express their gratitude to V. I. Safarov for his comments, to I. N. Belokurova and V. S. Zemskov for growing the Ge-Si crystals used in the experiments, and to Dr. V. Airo of France for preparing the germanium, tin-alloyed specimens.

2/2

APPROVED FOR RELEASE: 09/01/2001 CIA-RDP86-00513R002203310017-2"