Approved For Release 2003/02/27 : CIA-RDP86B00269R000600030001-1

commission on the ORGANIZATION of the government FOR the conduct of FOREIGN POLICY

June, 1975

For sale by the Superintendent of Documents, U.S. Government Printing Office
Washington, D.C., 20402 - Price $2.75
Stock Number 022-000-00108-6

Approved For Release 2003/02/27 : CIA-RDP86B00269R000600030001-1

Approved For Release 2003/02/27 : CIA-RDP86B00269R000600030001-1

COMMISSION ON THE ORGANIZATION OF THE GOVERNMENT
FOR THE CONDUCT OF FOREIGN POLICY
2025 M STREET, N.W.
WASHINGTON, D.C. 20506

June 27, 1975

TO: The President
The President pro tempore of the Senate
The Speaker of the House of Representatives

On behalf of my colleagues and myself I submit herewith the Report of the Commission on the Organization of the Government for the Conduct of Foreign Policy.

The Commission was established by Public Law 92-352 to submit findings and recommendations in order to provide a more effective system for the formulation and implementation of the nation's foreign policy. A copy of the law is annexed to the Report.

The findings and recommendations of the Commission are presented in a single volume with a Summary at the beginning. These findings and recommendations are those of the members of the Commission. Supplementary views of individual Commissioners are attached to the Report. The detailed research and analysis of scholars and experienced practitioners which were developed in the course of the Commission's work are set forth in seven volumes of appendices. These studies should provide a solid base for further study.

We believe that the report will be of value in considering future changes in the organization of the government for the conduct of foreign policy.

We acknowledge gratefully the genuine cooperation the Commission has received from the many agencies of government, and individuals, from whom it has sought information and counsel.

The members of the Commission deem it an honor and a pleasure to have had the opportunity to serve in this challenging and important task.

Respectfully,

Robert D. Murphy

Robert D. Murphy
Chairman

Approved For Release 2003/02/27 : CIA-RDP86B00269R000600030001-1

Approved For Release 2003/02/27 : CIA-RDP86B00269R000600030001-1

MEMBERS OF THE COMMISSION

ROBERT D. MURPHY, *Chairman*
Honorary Chairman, Corning Glass International

DAVID M. ABSHIRE
Chairman, Center of Strategic and International Studies, Georgetown University

ANNE ARMSTRONG**
Counsel to the President, The White House

WILLIAM J. CASEY
President and Chairman, Export-Import Bank of U.S.

MRS. CHARLES E. ENGELHARD, JR.
The Engelhard Company

AREND D. LUBBERS
President, Grand Valley State College, Allendale, Michigan

JAMES B. PEARSON, *Vice Chairman*
United States Senate

WILLIAM S. MAILLIARD*
U.S. House of Representatives

FRANK C. P. MCGLINN
Executive Vice President, Fidelity Bank, Philadelphia, Pa.

MIKE MANSFIELD
United States Senate

STANLEY P. WAGNER
President, East Central University, Ada, Oklahoma

CLEMENT J. ZABLOCKI
U.S. House of Representatives

WILLIAM S. BROOMFIELD
U.S. House of Representatives

PETER H. B. FRELINGHUYSEN***
U.S. House of Representatives

NELSON A. ROCKEFELLER
The Vice President

* Resigned December 1973; succeeded by Peter H. B. Frelinghuysen, January 1974.

** Resigned November 1974; succeeded by Nelson A. Rockefeller, December 1974.

*** Resigned January 1975; succeeded by William S. Broomfield, March 1975.

Approved For Release 2003/02/27 : CIA-RDP86B00269R000600030001-1

Approved For Release 2003/02/27 : CIA-RDP86B00269R000600030001-1

COMMISSION STAFF

FRANCIS O. WILCOX, *Executive Director*
FISHER HOWE, *Deputy Executive Director*
WILLIAM B. SPONG, JR., *General Counsel*
PETER L. SZANTON, *Research Director*

STAFF ASSOCIATES

WILLIAM I. BACCHUS
Associate Research Director
STEPHEN D. COHEN
Economics
ROGER MAJAK*
Congress
PHILIP N. MARCUS
Congress
THOMAS J. RECKFORD
Intelligence
D. ALAN RUDLIN
Associate General Counsel
PAUL R. SCHRATZ
Defense

STAFF ASSISTANTS

WILLIAM B. CARTER, III
ANN C. O'CONNOR
JAMES SCHWARTZ
JOHN E. TREAT*
MARGARET E. G. VANDERHYE*

ADMINISTRATIVE AND SECRETARIAL

GLORIA ADAMS
GWEN HALL
ROBERT HOLLISTER
JEANNE HOLMBERG
JOANN LASHLEY
HELEN SCHAEFER
ARLENE SULLIVAN
ANN TURNER
MARY LOUISE VASERHELYI

SENIOR STAFF CONSULTANTS

JAMES CLARK
ROBERT COX
KENT CRANE
FREDERICK D. ELFERS
WILLIAM R. HARRIS
RICHARD HOLBROOKE
PAUL A. VOLCKER

* Resigned.

TABLE OF CONTENTS

	Page
PREFACE	IX
SUMMARY	1
THE PURPOSES OF ORGANIZATION	19
CHAPTER 1—*The Importance of Organization*	21
CHAPTER 2—*Policy Issues of the Future*	25
THE PRESIDENT AND THE STATE DEPARTMENT	29
CHAPTER 3—*Executive Office of the President*	31
CHAPTER 4—*The State Department*	39
THE CONDUCT OF FOREIGN POLICY	53
CHAPTER 5—*International Economy Policy*	55
CHAPTER 6—*Defense Policy*	75
CHAPTER 7—*Intelligence*	91
CHAPTER 8—*Public Opinion and Humanitarian Considerations*	107
CHAPTER 9—*The Practice of Diplomacy*	117
CHAPTER 10—*Planning for Foreign Policy*	143
CHAPTER 11—*Budgeting and Foreign Affairs*	151
CHAPTER 12—*Personnel for Foreign Affairs*	161
CONGRESSIONAL-EXECUTIVE RELATIONS AND THE ORGANIZATION OF CONGRESS	193
CHAPTER 13—*Congressional Executive Relations*	195
CHAPTER 14—*Congressional Organization and Procedures*	205
ANNEXES	217
ANNEX A—*Comments and Supplementary Views*	221
ANNEX B—*Legislative Legislation*	258
ANNEX C—*List of Witnesses*	261
ANNEX D—*List of Consultants and Researchers*	271
Appendix E—Table of Contents	275

Approved For Release 2003/02/27 : CIA-RDP86B00269R000600030001-1

Approved For Release 2003/02/27 : CIA-RDP86B00269R000600030001-1

PREFACE

PURPOSE OF THE COMMISSION

The objective set for the Commission by its authorizing legislation is straightforward: to "submit findings and recommendations to provide a more effective system for the formulation and implementation of the Nation's foreign policy." The statute specifies the kinds of recommendations sought: it directs that they address the reorganization of the departments, agencies, independent establishments, and instrumentalities of the executive branch participating in foreign policy matters; improved procedures among those departments and agencies; the abolition of unnecessary activities and functions; and such other measures as may serve "to promote peace, economy, efficiency and improved administration of foreign policy." In addition to these concerns respecting the executive branch, the Commission was directed to recommend "more effective arrangements between the executive branch and Congress, which will better enable each to carry out its constitutional responsibilities."

The mandate of the Commission, in short, was to propose improvements not in the substance of our foreign policy, but in the means by which, in both the executive and legislative branches, that policy is made and implemented.

We undertook this assignment believing it to be of urgent importance. The world is increasingly pluralistic. The pace of technological change is rapidly increasing. The interdependencies of nations have become more numerous and more sensitive. Many of the most important problems are no longer clearly "domestic" or "foreign." The result of these complications is that the tasks of foreign policy have grown more numerous, more difficult, and more direct in their impact on our daily lives. It follows that if the United States is to attain its ends in the future, it must formulate its policies with greater foresight and clarity, and implement them with high effectiveness. We believe, therefore, that it is timely and important to consider afresh the organization of the government for the conduct of foreign policy.

It should be clear that by "organization" we mean—as our mandate intended—not only the lines of formal authority connecting individuals and agencies but also the processes by which decisions are taken, and the resources—of people, information and analysis—utilized in the making of those decisions. Throughout this report our

Approved For Release 2003/02/27 : CIA-RDP86B00269R000600030001-1

Approved For Release 2003/02/27 : CIA-RDP86B00269R000600030001-1

concern is with organization in this quite broad sense, in both the executive branch and the Congress.

We wish to emphasize, too, that our concern is with the future. While our mandate is to propose change, large revisions in the organization of the government cannot and should not be made with great frequency. The changes we propose therefore look to the enduring and longer-term needs of the government, not to issues of merely momentary concern. We seek no immediate action, therefore. We have attempted only to establish an agenda for orderly and timely change.

MODE OF OPERATION

In pursuing its complex and difficult task the Commission engaged in a wide variety of activities.

—It reviewed with care the findings and recommendations of the many relevant studies and reports which have preceded it.

—It heard the views and held discussions with a large number of public and private persons with experience in the analysis or conduct of foreign policy.

—It held public hearings in Philadelphia, Atlanta, Chicago and San Francisco to enable interested citizens and representatives of various groups to comment on matters of concern to them.

—It invited the comments of some 50 departments and agencies of our government interested in foreign policy problems as well as those of 225 of our overseas posts and missions. It also solicited reactions from World Affairs Councils in many cities and from numerous national organizations concerned with foreign affairs.

—It engaged in an intensive research program to develop hard evidence about the actual effects of various organizational arrangements. (A number of the major studies undertaken are reproduced in the appendices to this Report.)

—It conducted, from November, 1973 to July 1974, a detailed survey of the attitudes of Members of Congress with respect to the appropriate role for Congress in the making of foreign policy and the means necessary to the effective performance of that role. (The report of this Survey appears as Appendix M).

—Finally, the Commission and its staff engaged in prolonged discussions of the significance of what had been learned, the findings it justified and the recommendations most likely to offer genuine prospect for improvement.

ACKNOWLEDGMENTS

The Commission is grateful to the many individuals and representatives of organizations who appeared before it. It is also grateful to the work of its many consultants. It is grateful to Senator Mansfield for making available his own offices as a site for many Commission

Approved For Release 2003/02/27 : CIA-RDP86B00269R000600030001-1

deliberations. The Commission is also pleased to commend the open and cooperative attitude of the many agencies of government from whom it sought information—especially the Department of State, on which the heaviest burden fell. The response of these agencies was cooperative and prompt. The Members of Congress and their staffs were also helpful.

STRUCTURE OF THE REPORT

This report is divided into five principal sections.

Section I presents in brief form a *Summary* of our major recommendations and of the basis for them.

Section II, *The Purposes of Organization*, outlines the importance of sound organizations and decision processes, and discusses the functions that effective organization can and cannot perform. It then suggests the general characteristics of the foreign policy problems of the near future with which any organizational arrangements will have to contend.

Section III, *The President and the State Department*, spells out the Commission's main recommendations concerning the organization of the Executive Office of the President, and the Department of State.

Section IV, *The Conduct of Foreign Policy*, discusses changes in organization which might improve the formulation and conduct of various specific aspects of foreign policy, and contains additional recommendations concerning the White House and State Department as well as the Departments of the Treasury, Defense, and the Intelligence Community. Aspects of congressional organization are also discussed.

Section V, *Executive-Congressional Relations and the Organization of the Congress*, relates a number of the recommendations made concerning the executive branch to proposed congressional changes, and reviews the means by which executive and legislative branches of government can work together more effectively to carry out their mutual responsibilities for foreign policy.

Despite this division into separate sections, the report attempts to present an integrated and comprehensive view of the requirements for more effective foreign policy making; its parts can therefore be fully understood only in relation to each other.

In view of the number and quality of the many studies prepared for the Commission, and in the knowledge that the complex problems of government organization should profit from continuing reflection and discussion among the interested public, we are publishing many of these studies in a series of seven separate volumes, as Appendices. The views expressed in those Appendices are those of the individual authors. The views of Commissioners, and the Report of the Commission, are contained entirely in this volume.

Approved For Release 2003/02/27 : CIA-RDP86B00269R000600030001-1

* * * * *

Supplementary comments by the Vice President, Senator Mansfield, Congressman Broomfield, and Mrs. Engelhard appear in Annex A, p. 219. In adition to making more general observations, those comments address the following subjects (chapters of the Report to which they apply are indicated in parentheses):

Congressman BROOMFIELD. Public Diplomacy (chapter 9), the Proposed Joint Committee on National Security (chapter 14), and Defense Intelligence (chapter 7).

Mrs. ENGELHARD. State Department Personnel Management (chapter 12), the Role of the Departments in International Economic Policy (chapter 5), Policy Planning (chapter 10), Intelligence (chapter 7), the Role of the Public in Foreign Policy (chapter 8), Congressional-Executive Relations (chapter 13), and Multilateral Diplomacy (chapter 9).

Senator MANSFIELD. Congressional-Executive Relations (chapter 13), Congressional Organization and Procedures (chapter 14), and Intelligence (chapter 7).

Vice President ROCKEFELLER. Congressional-Executive Relations (chapter 13), Executive Branch Organization (chapter 3), Intelligence (chapter 7), Public Diplomacy (chapter 9), the Defense Budget (chapter 6), Embassy Communications (chapter 9), and Energy Policy (chapter 5).

Foreign policy is the whole of national policy looked at from the point of view of exigencies created by "the vast external realm" beyond our borders. It is not a "jurisdiction". It is an orientation, a point of view, a measurement of values—today, perhaps, the most important one for national survival.

DEAN ACHESON, 1960.

Approved For Release 2003/02/27 : CIA-RDP86B00269R000600030001-1

Approved For Release 2003/02/27 : CIA-RDP86B00269R000600030001-1

SUMMARY

Approved For Release 2003/02/27 : CIA-RDP86B00269R000600030001-1

Approved For Release 2003/02/27 : CIA-RDP86B00269R000600030001-1

SUMMARY

THE IMPORTANCE OF ORGANIZATION

CHAPTER 1

Good organization does not insure successful policy, nor does poor organization preclude it. But steadily and powerfully, organizational patterns influence the effectiveness of government.

Where organizational structure is logical and clear, the twin dangers of deadlock and of neglect are both minimized. Where processes of decision are orderly, decisions profit from the participation of the knowledgeable, and from the resulting confidence—even among those who sought a different result—that all relevant views were considered. Organization affects more than the efficiency of government; it affects the outcome of decisions. Organizational patterns determine whether an issue will be handled at one level rather than another, and in one agency instead of another. Since perspectives differ from level to level in government, and from agency to agency, the resulting decisions will differ also.

The objectives served in designing organizational arrangements are partially conflicting. They must make possible early and effective Presidential involvement, but also give weight to the knowledge of specialized officials. They should insure that decisions are well considered, but also made expeditiously. Officials must be able to respond flexibly to particular situations, but must also be guided by longer-range goals. Like policymaking itself, the design of organizations must balance conflicting objectives. It must therefore leave flexibility in the hands of senior officials.

Any organizational pattern must fit the personal styles of key decision-makers. Some are comfortable formulating policy in the presence of other officials, and some are not. Some want extensive written documentation; others prefer oral discussion. Some value the clarity of rigorous lines of command; others prefer the competition of overlapping responsibilities. These are personal predilections which any organizational arrangement must accommodate, at least in part.

The appropriateness of organizational arrangements also depends on the nature of the policy problems with which they must deal. For that reason, we outline the world environment in which we believe American foreign policy will operate over the near future.

57-268 O - 73 - 2

Approved For Release 2003/02/27 : CIA-RDP86B00269R000600030001-1

Approved For Release 2003/02/27 : CIA-RDP86B00269R000600030001-1

POLICY ISSUES OF THE FUTURE

CHAPTER 2

The appropriateness of organizational arrangements also depends on the nature of the policy problems with which they must deal. Assertions about the future are risky, but for organizational purposes predictions of only the most general kind are necessary, and these can be made with some confidence.

The most pervasive characteristic of international affairs in the next decades will be the growing interaction and tightening interdependence among the nations of the world. Almost certainly, economic issues will loom larger on the foreign policy agendas of the future. Investment policy, international monetary issues, economic development, and terms of trade will continue to be principal concerns. Technological and environmental issues will continue to grow in importance.

The frequency and intimacy of contact between societies will also increase. Virtually all governmental agencies will have direct and growing contact with officials of foreign governments. Interparliamentary groups will provide growing contacts among legislatures. Private organizations will increasingly operate across national boundaries.

The U.S. must continue to maintain military forces clearly sufficient to deter or respond to any threat. But military power alone cannot provide security. A growing number of conflicts of national interest will take economic form. Meanwhile, the global dispersion of wealth and productivity will continue, making it harder to resolve major international economic issues without widespread concurrence. Important questions will more often be debated or resolved in multilateral as well as bilateral forums.

Foreign policy and domestic policy merge. Foreign economics is inseparable from domestic economics, and domestic economics is domestic politics, in the U.S. and everywhere. The organizational implications of this mingling are numerous and important. They include changes in the number of executive departments involved in foreign policy; the necessity for clearer Presidential oversight and direction; a substantial expansion in the role of Congress in foreign policy; the need for better coordination between the executive and congressional branches; and a new role for public opinion.

To meet these challenges successfully, U.S. policymaking will have to embody features not easy to combine: extensive public and congressional participation, a clear sense of purpose, and continuity over time.

THE EXECUTIVE OFFICE OF THE PRESIDENT

CHAPTER 3

The ultimate decisions in foreign policy in the executive branch are taken by the President. He bears great responsibilities which cannot be delegated:

—to provide a conception of national purposes concerning the external world;

—to take personal command of issues which present major threats or opportunities to the national interests;

—to insure that the Congress is fully informed of proposed foreign policy initiatives;

—to resolve conflicts of policy concerning issues on which the executive departments cannot reconcile their views, or may do so in a manner which does not reflect the President's views of the national interests;

—to insure that the independent actions of various departments are coordinated; and

—to establish organizational and procedural arrangements which facilitate the performance of each of those tasks.

To meet their responsibilities, Presidents depend on help of three kinds. The first is staff—able assistants, Presidential in perspective. The second is structure—mechanisms and procedures in the Executive Office designed to facilitate the effective discharge of Presidential responsibilities. The third is strong performance from the Cabinet departments.

Presidential Staff. In addition to providing assistance to the President in performance of the foregoing tasks, Presidential staff must: identify issues likely to require Presidential attention; structure those issues for Presidential understanding and decision; insure that each interested department has an opportunity to state its case, and is clearly informed of decisions once taken; monitor implementation of policies agreed upon; and assess results. The defining characteristic of these tasks is that they embody staff responsibilities rather than line authority. They provide assistance to the President, not direction to departmental officials, other than to convey Presidential instructions. There should be only one official with line responsibility in the White House, and that is the President himself.

The Assistant for National Security Affairs. It is eloquent testimony to the extraordinary abilities of the present Assistant to the President for National Security Affairs that he has met the requirements of that post while simultaneously serving as an active and effective Secretary of State. His holding of both positions has arisen from quite special circumstances, it is well established, and no recommendation concerning it is made. Over the long term, however, the responsibilities of the Assistant for National Security Affairs, involving essential personal assistance to the President, management of issues for Presidential decision, and the direction of the National Security Council staff, should normally in the future be performed by an individual

Approved For Release 2003/02/27 : CIA-RDP86B00269R000600030001-1

Approved For Release 2003/02/27 : CIA-RDP86B00269R000600030001-1

with no other official responsibilities. The actual choice would of course rest with the President.

The responsibilities of that Assistant are heavy and important enough to require the undivided attention of even the ablest public servant. An Assistant to the President, moreover, must be a conduit to the President, and a force for balance and evenhandedness in the presentation and consideration of issues. These are staff functions, not easily made compatible with the responsibilities of a line official, the chief of a great department.

The Nature of Presidential Machinery. Since 1947, the basic White House machinery for the resolution of major foreign affairs issues has remained remarkably stable. The National Security Council (NSC) has afforded its members a useful mechanism for the airing of differences, the discussion of alternatives, the stating of recommendations, and the making of Presidential decisions. Perhaps even more important has been the development of a small but able NSC staff, headed by the Assistant to the President for National Security Affairs.

The nature of foreign policy problems has changed since 1947. So has the nature of international power. Increasingly, economic forces define the strength or weakness of nations, and economic issues dominate the agenda of international negotiation. National security policy is no longer simply a mix of diplomatic and military affairs; properly understood, national security embraces economic policy too. Accordingly, the membership of the National Security Council should be expanded to include the Secretary of the Treasury, and its jurisdiction expanded to include major issues of international economic policymaking.

With the broadening of the NSC to include international economic considerations, the degree to which domestic considerations must be blended into foreign policymaking also expands. On an ad hoc basis, the President should invite to NSC meetings concerning issues with important domestic implications either Cabinet or staff officials concerned with domestic policymaking.

The NSC should be used more extensively as a deliberative body—the highest forum in the executive branch where the major issues of foreign policy are aired and debated, prior to Presidential decision. The exact manner in which the NSC is used must be left to Presidential choice. But when the NSC's potential for informed and balanced consideration of issues is not used, important opportunities may be missed.

The Role of the Departments. The Departments of government must be drawn deeply into the formulation of policy at the Presidential level; to help avoid the bottlenecks created when unnecessarily large numbers of decisions are reserved [illegible] decision-making responsibility among those having the relevant professional experience and technical understanding of the issues, and to put responsibilities for decisions in the hands of those who will manage implementation.

Approved For Release 2003/02/27 : CIA-RDP86B00269R000600030001-1

DEPARTMENT OF STATE

The State Department will continue to be the central point in the U.S. government for the conduct of foreign affairs. It should concentrate upon three major functions, and adapt its personnel, organization and procedures to fulfill them. The Department should be the primary point in the government for assessing the overseas impact of proposed U.S. decisions and injecting international considerations into the national policy process. It should play a major part in the formulation of all U.S. policy having significant foreign implications, a responsibility which will require it to monitor, oversee, coordinate, and influence the foreign activities of other U.S. agencies. And it should continue to fill its responsibilities for the actual conduct of relations with other governments and international organizations.

Recommendations affecting the Department of State appear throughout the report, reflecting the Department's concern with virtually all aspects of foreign policy. The principal organizational changes proposed include the following:

—The position of Under Secretary of State for Political Affairs should be retitled Under Secretary for Political and Security Affairs, and become the focal point for strong State Department participation in Defense issues. The position of Under Secretary of State for Security Assistance should be abolished. (See Chapter 6.)

—The responsibilities of the Under Secretary for Economic Affairs should be broadened and his title changed to Under Secretary for Economic and Scientific Affairs.

—Functional responsibilities currently divided between the Bureau of Economic and Business Affairs and the Bureau of Oceans and International Environmental and Scientific Affairs, should be divided among four bureaus all reporting directly to the Under Secretary for Economic Scientific Affairs.

- —Economic and Business Affairs
- —Food, Population and Development Affairs
- —Oceans, Environment and Scientific Affairs
- —Transportation, Communication and Energy Affairs. (See Chapter 5)

—[illegible] Policy Information should direct the press, public affairs and policy information functions currently assigned to the Department, and those to be transferred to State

Approved For Release 2003/02/27 : CIA-RDP86B00269R000600030001-1

from the U.S. Information Agency. The Bureau of Cultural and Educational Affairs should be transferred to the proposed Information and Cultural Affairs Agency (ICA). (See Chapter 9)

—The current Deputy Under Secretary for Management would be upgraded to full Under Secretary status.

These proposals leave unchanged the number of positions at the Under Secretary level in the State Department. They transfer one bureau of another agency, carve two additional bureaus out of existing bureaus, and add one bureau of relatively small size. In addition, one office—that of Inspector General for Foreign Assistance—would be abolished.

INTERNATIONAL ECONOMIC POLICY

CHAPTER 5

The organization of the government must reflect the reality that foreign and political considerations cannot be segregated from economic and domestic interests. A framework to make international economic policy responsive to domestic and foreign policy considerations should

—encourage broad sharing of responsibility for the formulation of policy.

—encourage greater foresight in analyzing and attacking problems at an early stage.

—assure that policies, once formulated, are implemented in the spirit and manner intended.

The President ultimately is responsible for integrating international economic policy with foreign and domestic objectives. To assist him, four measures are recommended:

—Appointment of a senior Assistant to the President for Economic Policy. The Assistant should have direct access to the President, and should participate or be represented in the National Security Council and domestic policymaking bodies. He would also serve as the Executive Secretary of the proposed joint Subcouncil on International Economic Policy.

—Establishment of an International Economic Policy Advisory Board composed of private citizens. The Board would be provided a small secretariat, and should have direct access to the President.

—Creation of an independent study group on international economic issues under the auspices of the Council [illegible] examine long-term international economic trends and developing issues.

—Establishment, as a joint subcouncil of the NSC, the Domestic Council and the Economic Policy Board, of a Subcouncil on International Economic Policy, composed of the Under Secretary of State for Economic and Scientific Affairs, the Under Secretary of Treasury for Monetary Affairs, the Under Secretaries of Commerce and Agriculture and the Chairman of the Council of Economic Advisers. Other subcabinet officers would attend as appropriate. Staff of the Subcouncil would be drawn in part from the staffs of its parent bodies but would function under the Assistant to the President.

CIEP should be abolished and its staff used to strengthen the economic capability of the NSC and the Domestic Council.

The choice of Subcouncil Chairman should be left to the President. The Under Secretary of State, as the most senior U.S. Government official concerned solely with foreign economic policy, should normally fill this role.

The Department of State must significantly improve its capability to deal with the foreign policy aspects of economic, business, scientific, energy, transportation, food, population, development, and related issues.

To this end:

—More Ambassadors and Deputy Chiefs of Mission with economic expertise should be appointed.

—Personnel interchange among departments and agencies and between government and business should be expanded.

—Multiagency participation in policy negotiation and implementation abroad under State Department coordination should be increased.

—The Agency for International Development (AID) should remain the operating arm of the State Department for bilateral foreign assistance, with the Treasury Department having primary responsibility for supervision of U.S. commitments to international development institutions.

—The Federal Energy Administration (FEA) should provide leadership in carrying out the national energy policy, with the State Department responsible for continuing to bring foreign policy considerations to bear in the formulation of policy in that area.

—The Office of Export Administration in the Commerce Department should be the central point for licensing and surveillance of trade and investment with Communist countries, under policy guidance providing a better balance between military and economic considerations.

Approved For Release 2003/02/27 : CIA-RDP86B00269R000600030001-1

Approved For Release 2003/02/27 : CIA-RDP86B00269R000600030001-1

—The Office of the President's Special Trade Representative should be transferred, following current trade negotiations, to the Department of State.

DEFENSE POLICY

CHAPTER 6

The U.S. will continue to require military capabilities unquestionably sufficient in size, equipment, and readiness to assure the security of the U.S. and its allies against aggression. The Defense establishment must be designed and utilized as an instrument of U.S. foreign policy.

To better achieve these objectives some restructuring of the NSC and its committees is recommended, notably, the creation of a National Security Review Committee, including membership from major agencies with national security interests, whose function would be to insure the larger integration of defense policy, programs, and budgets with the objectives of U.S. foreign policy. The committee would conduct a major review at the beginning of each administration (with annual reviews and updating subsequently) under the direction of the President and his National Security Assistant. To bring more fully to bear on defense policymaking the perspectives of the informed American public, an Advisory Board on National Defense, composed of knowledgeable private citizens, should also be established.

The State Department is inadequately equipped to deal with political-military issues; a number of structural and personnel system changes are needed. These include, as indicated above, making the Under Secretary of State for Political Affairs (retitled the Under Secretary for Political and Security Affairs) directly responsible for State's expanded role in the Defense community. The Bureau of Politico-Military Affairs would report directly to him.

Several changes in the role of the Arms Control and Disarmament Agency (ACDA) are also appropriate.

—The Director of ACDA should be established as principal adviser to the NSC on arms control and disarmament matters.

—The Director should become a member of the proposed National Security Review Committee; the agency should also be represented on the proposed NSC Arms Transfer and Security Assistance Committee.

—ACDA should provide more public information on arms control and disarmament matters.

—External research should be expanded, focusing on longer-term problems.

A substantial increase in ACDA's small budget over the next few years seems appropriate.

Approved For Release 2003/02/27 : CIA-RDP86B00269R000600030001-1

The President's capability to deal with the major policy issues in the defense area depend in large part on the management of the budget. Accordingly,

—a new analysis capability should be established in the Office of Management and Budget (OMB) to address broad defense policy and program issues;

—more determined efforts should be made to inject Presidentially-approved fiscal guidance earlier into the defense programming cycle.

In support of all these efforts, closer contact should be maintained among the staffs of the NSC, State Department, and OMB in defining issues, conducting special studies, and seeing that the results of such studies are reflected in the defense budget process.

The Department of Defense (DoD) is, of course, the main operating agency in the field of military affairs, and the principal instrument for assuring that the activities of DoD serve the President's overall policy objectives in the civilian leadership he appoints. Within DoD the Office of the Assistant Secretary for International Security Affairs (ISA) should play a greater role in shaping the defense program and budget.

Measures are proposed to strengthen the ability of the Secretary of Defense to exercise his responsibilities for direction and control of crisis operations through provisions to insure the responsiveness of the National Military Command Center to the operational needs of the Secretary, increased autonomy for the Chairman of the Joint Chiefs of Staff vis-à-vis the services in operational matters, and selection procedures for officers in key Joint Staff positions.

INTELLIGENCE

CHAPTER 7

National security and the effective conduct of U.S. foreign policy require maintenance of intelligence capabilities of the highest competence. Intelligence in a democracy must meet three tests: to provide accurate information and competent analysis concerning the issues of greatest concern to policymakers; to avoid unnecessary costs and duplication; and to function in a manner which commands public confidence.

Firmer oversight of the intelligence community is required. This is difficult to achieve for a variety of reasons.

The community consists of many agencies, with differing objectives and lines of command. The great bulk of its budget and manpower [illegible] Defense, yet the Secretary of Defense clearly should not also serve as the nation's chief intelligence officer. Prior efforts to deal with this situation have taken several forms, but

Approved For Release 2003/02/27 : CIA-RDP86B00269R000600030001-1

have hinged on the Director of Central Intelligence (DCI). In addition to his responsibilities for CIA, the DCI has been charged with the oversight and leadership of the entire intelligence community.

This arrangement has worked only partially. Having line authority over their own agency but only limited influence over other intelligence units, DCIs have tended to devote themselves largely to CIA affairs.

Several changes are necessary. To supervise effectively the intelligence community, the DCI must be a close assistant to the one official who does ultimately command each element of the community: the President. In order to meet his community-wide responsibilities, as well as to be the President's principal intelligence adviser, the DCI should have an office in close proximity to the White House and be accorded regular and direct contact with the President. He should delegate much of his authority for the day-to-day direction of CIA to his deputy. In addition, some extensions of the DCI's current responsibilities for community-wide planning and budgeting are recommended.

To make clear exclusively foreign responsibilities of the Central Intelligence Agency and of its Director, the CIA should be retitled the Foreign Intelligency (FIA), and its Director, the Director of Foreign Intelligence (DFI).

The Director of Foreign Intelligence should have a broad understanding of foreign and national security affairs, managerial skill, sensitivity to the constraints within which an American intelligence service must operate, independence and high integrity. The DFI should normally be a person of stature from outside the intelligence career service, although promotion from within should not be barred.

In view of the special importance and sensitivity of intelligence, the President should have sources of advice independent of the DFI. The President's Foreign Intelligence Advisory Board (PFIAB) should become the principal such source. Each incoming President should review and make such changes in PFIAB's membership as may be required to give him high personal confidence in that body's values and judgment. PFIAB's staff should be enlarged and drawn in part from sources outside the intelligence community.

The quality and relevance of intelligence need continuing upgrading, with a more active NSC Intelligence Committee (NSCIC) as the principal forum for resolution of differing perspectives of consumers and producers. Analytic improvements are also needed, notably in the areas of Foreign Service reporting, economic intelligence, and the process by which National Intelligence [illegible] produced. A better balance between technical and human means of intelligence collection is required.

Approved For Release 2003/02/27 : CIA-RDP86B00269R000600030001-1

To supplement steps taken in recent years to improve resource management, a multi-year plan for allocation of intelligence responsibilities across the community should be prepared, and on the basis of this plan, an annual consolidated foreign intelligence budget should be developed.

Covert Action. Many dangers are associated with covert action. But we must live in the world we find, not the world we might wish. Our adversaries deny themselves no forms of action which might advance their interests or undercut ours. In many parts of the world a prohibition on our use of covert action would put the U.S. and those who rely on it at a dangerous disadvantage. Covert action should not be abandoned, but should be employed only where such action is clearly essential to vital U.S. purposes and then only after careful high level review.

Present practices for review and approval of covert action are inadequate and should be strengthened. Covert actions should be authorized only after collective considerations of their benefits and risks by all available 40 Committee members. In addition, covert action should be reported to the proposed Joint Committee of the Congress on National Security or to some other appropriate congressional committee.

PUBLIC OPINION

CHAPTER 8

As foreign policy issues develop domestic ramifications, and radio and television bring world events into every home, public opinion will be an increasingly important determinant of foreign policy. The government will need to communicate more fully to the public, and in return develop a more accurate sense of public attitudes on policy matters. Procedures cannot substitute for receptiveness to what is being communicated, but improvements are possible. Important congressional foreign policy debates should be opened to television, more comprehensive public affairs programs should be developed, and programs for education in international affairs should be more fully funded. Policymakers can develop better information on the trends of public opinion through greater attention to polling, provision of more channels for interchange of views with members of the public, and inclusion in policymaking of officials familiar with public opinion.

HUMANITARIAN, HUMAN RIGHTS AND ETHICAL CONSIDERATIONS

CHAPTER 8

Issues of humanitarian and human rights activities and sensitivity to ethical considerations in policymaking deserve greater attention. The new Office of Humanitarian Affairs in the Department of State should be upgraded, *an Advisory Committee* to the Secretary of State

Approved For Release 2003/02/27 : CIA-RDP86B00269R000600030001-1

on Human Rights should be created, and a broader mandate given the U.S. Representative to the United Nations Human Rights Commission.

PRACTICE OF DIPLOMACY

CHAPTER 9

Bilateral Relationships. Three tasks should become the principal focus of posts and missions abroad: providing perceptive assessment of important foreign developments; supporting and overseeing the whole range of U.S. activities in each country; and furthering multilateral diplomacy through bilateral relationships.

The Ambassador must be the central representative abroad of the United States and of the President; he must have greater control of communications and personnel in his mission. Foreign Service reporting requires substantial improvement. Officials at home and in the field should remain in closer touch to maintain a shared perspective toward their joint responsibilities. Modifications in the process of inspection of posts abroad would help provide more effective management.

Multilateral Relations. Multilateral channels of diplomacy will be increasingly important as more issues of global interdependence find their way into multilateral forums. Policymakers must decide when our national interests are best served by their use, and when other forms of diplomatic relations are more appropriate. Periodic review of our approach to these organizations should be undertaken.

No single unit or department of our government can take exclusive responsibility for U.S. participation in multilateral agencies. Lead responsibility should be assigned to the appropriate functional bureaus in the State Department. Delegations to multilateral organizations and conferences should be multiagency in composition; the Secretary of State should select heads of delegations from the best qualified individuals in or out of the government. Members of Congress can and should play a valuable part as members of delegations even if they are usually not voting members.

Public Diplomacy. Our information and cultural activities abroad have three separate aspects. First, the function of policy advocacy should be placed in the Department of State alongside the responsibility for policy itself. Second, the longer range functions of cultural communication and general information should be combined in a separate agency. Third, the Voice of America should be independent, under a separate board made up of public and private members, taking guidance from the Department of State on all policy commentary. Personnel for public diplomacy should continue to be separate from the Foreign Service.

PLANNING

CHAPTER 10

To be effective, foreign policy must achieve coherence over time. It must serve consciously developed, long-term goals and priorities. The planning function must insure that current policy takes account of future trends and long-term purposes and priorities, that current actions are reevaluated from time to time, and that new initiatives are generated.

The products of planning must be adapted to many needs, but two documents in particular would be important additions. The reintroduction of a State of the World statement on a periodic basis would offer a comprehensive conceptual basis for policy and programs. The establishment of a process which regularly produced and revised a Global Systems Critical List would create an authoritative inventory of possible long-run problems or opportunities associated with such issues as food, population, weather modification, the environment, and natural resources. Such a list should be used by both Congress and the executive to insure that the nation's response to such issues is timely and adequate.

Additionally, a Council of International Planning should be established at the Presidential level, to give a government-wide perspective to planning and to take account of the interaction of domestic and foreign issues. In the Department of State a strong Policy Planning Staff is also necessary. External expertise is vital to policy planning; to this end a planning Advisory Committee should be instituted, among other purposes to assist government planners to become more sensitive to newer methodologies and analytic techniques for forecasting and planning.

BUDGETING

CHAPTER 11

The effective treatment of resources in foreign policy analysis and coordination has been a continuing problem for the foreign policy community. Budgeting is particularly complex in foreign affairs, since budgetary impact may be small relative to the importance of policy actions, and foreign policy decisions depend heavily on external developments over which the government has no control.

Development of a unified foreign affairs budget is not feasible, but special analyses and displays on a cross-agency basis could prove helpful. Country and regional programming efforts should continue, but on a selective and better focused basis.

In the Congressional budgeting process, the two foreign affairs committees should review the views and estimates of the appropriation committees for their foreign policy implications. These two committees should also be represented on the two new budget committees. Congress should simplify the authorization process; it may wish to con-

Approved For Release 2003/02/27 : CIA-RDP86B00269R000600030001-1

Approved For Release 2003/02/27 : CIA-RDP86B00269R000600030001-1

sider combining the appropriations and authorization processes through "program committees," once the new Congressional budget process has become established.

PERSONNEL

CHAPTER 12

People may be the single most important element in successful foreign policy. The foreign affairs agencies of the government must provide a more systematic way of placing the right people in the right jobs, and particularly assuring that qualified people are placed in executive positions. Sustained attention to executive development and other major issues has been missing.

State Department's personnel capabilities must be improved by:

—raising the performance in functional specialties;
—emphasizing the specialty of diplomatic functions and particularly building Foreign Service assessment capabilities;
—improving management capabilities of the departmental and Foreign Service personnel;
—revising arrangements for employee-management relations, and
—instituting a strong Executive Development Program for both the State Department and the international activities of other government agencies.

In particular, the State Department's personnel management should be given a more professional basis by a single Director of Personnel, responsible for all personnel systems in the Department, and reporting directly to the proposed Under Secretary for Management. Job requirements should be matched more effectively with individual talents through comprehensive manpower planning. A Foreign Affairs Executive Service should be instituted under the leadership of the Department, utilizing the government-wide personnel systems, in order to provide for the development of broad-gauged executives for senior positions in all foreign affairs agencies, and in foreign posts and missions.

EXECUTIVE-CONGRESSIONAL RELATIONS

CHAPTER 13

A new era of cooperation between the executive and congressional branches in foreign relations is vital to the security of our Nation and to the peace of the world.

Major foreign policy problems of the future will increasingly arise from the tightening economic and physical interdependence of nations, and problems of interdependence will sharply affect the domestic economy and therefore merge with domestic political issues. Foreign policy will therefore touch the American public more directly, and will involve the Congress to a greater degree. Moreover, the Constitution gives the Congress the sole power to regulate commerce with foreign nations; as that commerce becomes more central to our foreign relations, the Congressional role must inevitably grow. The Congress, then, must be prepared to play, effectively and responsibly, a broader role than before in those issues with both foreign and domestic dimensions.

Balance and effectiveness in the future conduct of our international relations is necessary, not a radical shift in power between the branches. The executive must conduct relations with other countries. The President must have the flexibility to negotiate effectively and provide responsible leadership in meeting international demands of increasing complexity. But measures are needed to provide for a fuller sharing of responsibilities in that broad region where both branches must act together.

Executive Agreements. A source of confrontation and dispute in recent years between Congress and the executive branch has been the use of "sole executive agreements" with foreign governments. These are international agreements not concluded as treaties or as executive agreements to which Congress has concurred, but by executive action alone. The advantages to the executive of freedom to enter into such arrangements must be balanced against the necessity for an opportunity, through the Congress, for review and recourse as to their terms. The Department of State has revised its regulations concerning these agreements. They now provide that there should be consultation with Congress whenever there is a question whether an international agreement should be concluded as a treaty or by executive agreement.

In 1972 Congress enacted a law requiring that the text of all executive agreements be submitted to Congress within 60 days after they are concluded. These executive and legislative actions would be strengthened, and shared responsibility for international agreements further assured, if Congress made clearer its view as to when the nation is committed to assist another nation by use of armed force, or material or financial resources.

The Congress should adopt, by concurrent resolution, a statement that a national commitment—meaning an agreement to assist a foreign country, government or people by the use of the armed forces or financial resources of the United States, either immediately or upon the happening of certain events—results only from affirmative action taken by the legislative and executive branches of the United States Government by means of a treaty, statute, or concurrent resolution of both Houses of Congress specifically providing for such a commitment.

Emergency Powers. Four Presidential proclamations of national emergency are currently in effect. Pursuant to them, over 470 provisions of federal law have come into effect, delegating extraordinary authority to the executive. The actual emergencies have now ended, but the formal states of emergency endure. These national emergencies

Approved For Release 2003/02/27 : CIA-RDP86B00269R000600030001-1

Approved For Release 2003/02/27 : CIA-RDP86B00269R000600030001-1

should be terminated. Any future declarations of national emergency should specify the statutory powers required to meet such an emergency; all national emergencies should be terminable at any time by concurrent resolution or Presidential proclamation; and provision should be made for their termination in the absence of their extension by Congress.

Executive Privilege. A claim of executive privilege should be asserted only by the President personally, and when so asserted, any such claim should be considered carefully and respectfully both by the Congress and, if the matter should come to litigation, by the judiciary. There are kinds of information which present a substantial basis for claims of executive privilege. Yet Congress has a right to the fullest access to information necessary for the fulfillment of its own constitutional responsibilities.

Congress should therefore establish procedures to limit the occasions for dispute between the two branches, and to provide for the swiftest resolution of conflicts should they arise. These procedures should regularize the process whereby either House or a committee of either House may seek information. They should also establish the steps whereby, if that information is denied, the matter can be referred to the federal courts for expeditious resolution.

A Classification System Based on Statute. Too much information in the field of foreign policy is classified too highly, and too long. A number of corrective actions have recently been taken, but the classification system still operates without any statutory basis. Procedures so important and potentially so dangerous as those which restrict the ability of a free people to review the operations of its own executive departments should be defined and circumscribed by law.

The Congress should consider legislation establishing a comprehensive classification system based on the following guidelines:

—Mandatory classification of specified types of information relating principally to national defense and the sources and methods of intelligence.

—Mandatory exemption from classification of certain other information.

—Classification or exemption from classification of all other information on the basis of specified criteria balancing the need for secrecy against the potential value of disclosure.

Increased Use of Report-Back and Time-Limit Procedures. Greater use should be made of report-back requirements [illegible] written reports from executive officials to the Congress, and of statu[illegible] limits in proposed legislation.

To improve the coherence and consistency of Congressional actions affecting other nations, the House Committee on International Relations should be accorded "special oversight functions" over reciprocal tariff agreements, in addition to its other responsibilities for trade policy issues. It should also exercise concurrent legislative oversight over international financial organizations, together with the House Committee on Banking and Currency. A review by the Senate of its own committee system also now seems appropriate. Subcommittees in both Houses should be more fully utilized to strengthen the basis of committee action, and to provide greater interchange with working-level executive officials as should joint subcommittees hearings.

A New Joint Committee. Since political, military and economic aspects of foreign policy have become interlocked, Congress should contain some forum in which those interrelations can be directly weighed. At the same time Congress is requiring greatly increased consultation with senior foreign policy officials of the executive branch. The result is a potentially unsustainable demand on senior executive officials for multiple appearances before Congress. To help resolve both problems, and to provide more effective oversight over the intelligence community, a Joint Committee on National Security should be established. It should perform for the Congress the kinds of policy review and coordination now performed in the executive branch by the National Security Council, and provide a central point of linkage to the President and to the officials of that Council.

In addition, it should take responsibility for Congressional oversight of the Intelligence Community. The Joint Committee should include the leaders of the key foreign, military, and international economic policy committees from each House, and several Members-at-Large appointed by the party leaders. It should be vested with authority to:

—Receive, analyze and refer reports from the President under the War Powers Act.

—Receive and review analytic products of the intelligence community.

—Oversee the system of information classification discussed above.

—Establish a code of conduct to govern the handling by Committee members of classified or sensitive information.

In two specific areas the Joint Committee might usefully have authority to report legislation to the floor of each House. These are to consider the creation of a statutory system of information classification; and (if intelligence oversight is assigned to it), annual authorization of funds for the intelligence community.

Approved For Release 2003/02/27 : CIA-RDP86B00269R000600030001-1

Approved For Release 2003/02/27 : CIA-RDP86B00269R000600030001-1

In the event that this Committee is not established a Joint Committee on Intelligence should be created to assume the important task of Congressional oversight of the intelligence community.

Capacities for Evaluation and Review. Through various proposed actions, the Congress might be able to meet more systematically than before its responsibilities for the evaluation and review both of major programs and of the policies on which they are based.

Increasing Attentiveness to Foreign Affairs. International contacts have a beneficial effect in familiarizing Members of Congress with overseas conditions and foreign perspectives. To this end, more extended travel abroad by Members, the preparation of reports based on staff travel, and increased travel by teams of Members are desirable. Similarly, greater participation by Members of Congress is international negotiations, is an important means of increasing the first-hand information available to Members on foreign policy and its conduct.

As to public understanding of foreign policy issues, Congress, through carefully organized hearings, can provide needed critical review of U.S. purposes and policies. Such review is necessary to test the soundness and coherence of policy and to generate the public understanding and support without which, in the end, it cannot succeed.

Recent trends toward opening the deliberations of Congress on major foreign policy issues should be encouraged. Committee hearings should routinely be open for television. At the discretion of the House and Senate, consideration should also be given to making floor debates on major foreign policy issues available.

THE PURPOSES OF ORGANIZATION

Approved For Release 2003/02/27 : CIA-RDP86B00269R000600030001-1

Approved For Release 2003/02/27 : CIA-RDP86B00269R000600030001-1

CHAPTER 1

THE IMPORTANCE OF ORGANIZATION

> Organization cannot make a genius out of an incompetent; even less can it of itself make the decisions which are required to trigger necessary action. On the other hand, disorganization can scarcely fail to result in inefficiency and can easily lead to disaster.
>
> —DWIGHT D. EISENHOWER, *1963*

Good organization does not insure successful policy. Nor does poor organization preclude successful policy. But steadily and powerfully, organizational patterns influence the effectiveness of government.

Policymaking on any subject of importance requires adequate information, careful analysis of the implications of that information, consultation with the various parties legitimately concerned, and balanced assessment of the alternative courses of action. Once a decision is made, it must be clearly communicated to those responsible or affected by it, carefully monitored in its implementation, and evaluated for its actual effects. These are not functions which occur automatically.

In a necessarily large and complex government, effective operation requires a general understanding of who is responsible for what, and how those responsibilities interact with the tasks and authorities of others. Where organizational structure is logical and clear, the twin dangers of deadlock and of neglect are both minimized. Where the processes of decision are orderly, or as orderly as the press of events permits, decisions profit from the participation of those knowledgeable or affected, and from the resulting confidence—even among those who sought a different result—that their views were considered.

But organization affects more than the efficiency of government; it can affect the outcome of decisions. Organizational patterns determine the probabilities that a decision will be taken at one level rather than another, or in one agency instead of another. And since perspectives differ from level to level in government, and from agency to agency, the resulting decisions will differ also. To illustrate:

> During the 1960s, the U.S. maintained substantial Chemical and Biological Warfare capabilities (CBW) and reserved the right to use them, contrary to the Geneva protocol of 1925 which most major nations had signed but the U.S. had not. The Joint Chiefs of

Approved For Release 2003/02/27 : CIA-RDP86B00269R000600030001-1

Approved For Release 2003/02/27 : CIA-RDP86B00269R000600030001-1

Staff supported this policy and were understandably disturbed by occasional statements of other officials that U.S. policy might or should be changed. Consequently, in 1967, the Chiefs asked Secretary of Defense McNamara to seek formal reaffirmation of the policy and a direction to the State Department and Arms Control and Disarmament Agency to cease statements to the contrary.

Under the procedures of the Johnson Administration, an issue of this sort could reach the President only if a senior official were prepared to urge the President to adopt a particular recommendation, even over the opposition of other officials. In the light of his other concerns at the time, McNamara decided to take no position. He referred the JCS request to Secretary of State Rusk, who forwarded it to the Bureau of Politico Military Affairs in State. That bureau was divided on the issue. When other bureaus were consulted, differences only deepened. During the last year and a half of the Johnson Administration, State proved unable to produce an agreed position and the CBW issue was never brought to the White House.

The Nixon Administration instituted a different procedure, and it produced a different outcome. In 1969, the Chiefs again asked the Secretary of Defense to seek a national policy on CBW. The Secretary now had a new alternative. He proposed that, consistent with the new procedures for the study of major issues, a National Security Study Memorandum be issued requiring an interagency study to identify all options concerning CBW policy, and stating the pros and cons of each. The study was completed, and the issue went to a National Security Council meeting. There the Chairman of the Joint Chiefs personally represented to the President the Chiefs' position. But the President had before him the counter-arguments.

After all views had been aired, the President reversed the previous policy. He renounced the right to produce and use biological weapons and pledged to sign the 1925 Geneva Protocol.*

It obviously does not follow that the best process is one which brings all decisions to the President. The objectives to be served in designing organizational arrangements are partially conflicting. They must make possible early and effective Presidential involvement, but must also give weight to the perspectives and knowledge of more specialized officials. Similarly, though decisions should be well considered and carefully thought through, they also should be made expeditiously. We must be free to respond flexibly to particular situations, but must also be guided by longer-range goals. We want policy decisions understood and supported as widely as possible, but on some occasions they must be taken quickly and without broad consultation.

The design of organizations, like policymaking itself, must seek to balance conflicting objectives. It must therefore leave considerable flexibility in the hands of senior officials.

Approved For Release 2003/02/27 : CIA-RDP86B00269R000600030001-1

Organization, Personality, and Policy. The basic tasks which any organizational arrangement must perform—the provision of information, analysis of alternatives, monitoring of implementation and so forth—do not change. But there are many ways of performing them. The question of which way—which organizational structure—is best at a given moment in history will depend on at least two factors.

Any organizational pattern must fit the personal styles of key decision-makers. Some Presidents and some Secretaries are comfortable formulating policy in the presence of other officials and some are not. Some want extensive written documentation; some prefer the give and take of oral discussion. Some value the clarity of rigorous lines of command and clear-cut jurisdictions; some prefer the competition produced by overlapping responsibilities. These are personal predilections which any organization arrangement must accommodate, at least in part.

The appropriateness of particular organizational arrangements also depends on the nature of the policy problems with which they must deal. In a period characterized by the wide recognition of external threat and by a high degree of national unity, a President may appropriately rely on a small group of advisers. In a period of debate over national objectives, and of sharp interaction between foreign policy and domestic politics, he may require a larger group. Organizations must evolve to meet changing needs. For that reason, it is important to outline the world environment in which we believe American foreign policy will be required to operate over the near future. We turn to that subject in the next chapter.

* The details of this incident are set out in appendix K.

Approved For Release 2003/02/27 : CIA-RDP86B00269R000600030001-1

CHAPTER 2

POLICY ISSUES OF THE FUTURE

> Progress in dealing with our traditional agenda is no longer enough. A new and unprecedented kind of issue has emerged. The problems of energy, resources, environment, population, the uses of space and the seas, now rank with the questions of military security, ideology, and territorial rivalry which have traditionally made up the diplomatic agenda.
>
> —HENRY KISSINGER, *January 1975*

Assertions about the future are risky, but for our purposes, predictions of only the most general kind are necessary, and these can be made with some confidence. We believe that a number of tendencies already obvious—tendencies concerning the nature of foreign policy issues, the degree of interaction and interdependence among societies, the changing forms of international relations, and the shifting sources of power—are deep seated and likely to continue. And we believe they have important implications for the way in which the U.S. must organize to conduct its foreign policy.

Almost certainly, economic issues will loom larger on the foreign policy agenda of the future. Investment policy, international monetary issues, balance of payments problems, economic development, and the terms of trade will continue to be principal concerns of major governments. It seems clear as well that technological issues will continue to grow in importance. Environmental concerns will necessarily cross national boundaries. International agreements will affect the use of the oceans as sources of food, mineral and energy needs. The use of satellites for the identification of earth's resources and the monitoring of the earth and atmosphere will continue to grow in importance. The spread of nuclear technology will offer simultaneously the promise of relief from dependence on fossil fuels and the difficulties inherent in the dispersion of nuclear technology.

At the same time, we believe the frequency and intimacy of contact between societies will continue to grow. Virtually all governmental agencies—not merely State, Defense and Treasury—have interests abroad, and are in increasing contact with officials of foreign governments. Interparliamentary groups will provide growing contacts among legislatures. Private organizations will increasingly operate

Approved For Release 2003/02/27 : CIA-RDP86B00269R000600030001-1

Approved For Release 2003/02/27 : CIA-RDP86B00269R000600030001-1

across national boundaries. The employees of U.S. private and business organizations overseas, already far outnumbering civilian U.S. Government employees outside the U.S., will continue to grow. Scholars and scientists, cultural groups and business organizations will increasingly perform activities across national boundaries.

While we recognize that an interdependent world will intensify relations between states and peoples and place a premium on international cooperation, it does not diminish the need to retain that independence necessary to provide leadership, to secure cooperation on satisfactory terms and to make the contribution to world needs which national skills, resources and experience permit.

The U.S. must maintain a healthy economy both for its own sake and as the necessary base for its military strength. Yet as global productivity increases, the U.S. share of the world's wealth inevitably diminishes. In 1947, some 50% of the world's gross national product was accounted for by the United States; in 1960 it was 34%; in 1975, roughly 27%. The dispersion of wealth and productivity will continue, making it difficult to resolve major international economic issues by the assertion of a U.S. position and the concurrence of three or four other powers.

Moreover, as we have seen a diffusion of power among societies, so we are witnessing a diffusion of authority within societies. Once-accepted goals and values are increasingly questioned, the authority of established institutions is challenged, often with outside support, with the result of frequent changes in regimes throughout the world. We believe these trends are likely to continue at least for the near-term future.

It has followed inevitably from the global reach of economic and technical issues, from the growing dispersions of power, the development of international communications, and the tripling of the number of independent states since World War II, that important questions are being more frequently debated in multilateral as well as in bilateral forums. Policies affecting energy, nuclear proliferation, investment, raw materials, population control, food, weather, the oceans, will evolve as a result of understandings reached and actions taken in international political and technical agencies—the UN, the World Bank, the International Monetary Fund, regional security alliances, the Organization for Economic Cooperation and Development, and other economic entities.

We believe that the interdependence of foreign and domestic policy will grow. When U.S. consumer interests in the price of bread or soybeans conflict with the goals of our relations with the Soviet Union or Japan; when the support of Israel [illegible] pumps; when the price of tuna on the West Coast varies with the actions taken by Peru and Equador, then the relations between foreign and domestic concerns are direct and difficult. This fact is closely related, of course, to the growing international importance of economic problems. International economic forces impact on domestic economics, and domestic economics is domestic politics, in the U.S. and everywhere. We believe that the organizational implications of this fact are numerous and important. They include changes in the number of executive departments involved in foreign policy; the necessity for clearer Presidential oversight and direction; a substantial expansion in the role of Congress in foreign policy; the need for better coordination between the branches, and an expanded role for public opinion.

The combined effect of these shifts in the nature of international relations seems to us to be the following:

—The most pervasive characteristic of international affairs in the next decades will be the growing interaction and tightening interdependence among the nations of the world. As the linkages between them multiply in number and in importance, even the largest nations will not be able to satisfy their basic requirements for material well being through independent action. By the same token they will be unable to insulate their societies from the effects of external forces.

—Domestic responsibilities of governments will require those governments to work collaboratively with other states. This is the practical meaning of interdependence: on economic and technical issues, unable by independent action to meet national needs, governments will require accommodation with other societies to gain their own ends.

—The requisite cooperation of societies will involve a large number of nations. Economic and monetary cooperation have involved especially the developed nations of Western Europe, Japan and North America, but the growing interrelationships among trade, exchange rates, investment and development will increasingly affect all nations. Problems generated by uses of the oceans and atmosphere will involve both the developed and the less-developed countries. The regulation of armaments will concern principally the great military powers but all states will have an important stake and consequent responsibility. Resource issues will involve both producers and consumers.

—The essential collaboration will take many forms and operate through many forums, but will heavily involve multilateral groupings and international agencies.

—The maintenance of steady, cooperative relations with a wide variety of states of differing philosophies and conflicting objectives will require greater sensitivity and understanding. It will be difficult because many of the matters involved will directly affect the daily lives of citizens through their effect on prices, wage rates, and employment levels. These are the cutting issues of domestic politics. Thus, the necessity to coordinate internal policymaking closely and continuously with our actions respecting other nations and international bodies will involve special effort and severe

Approved For Release 2003/02/27 : CIA-RDP86B00269R000600030001-1

Approved For Release 2003/02/27 : CIA-RDP86B00269R000600030001-1

strain. It can be accomplished only if the American people understand the issues.

—It seems fair to infer that in order to undertake these tasks successfully, U.S. policymaking will have to embody essential features which are not easy to combine: extensive public and congressional participation, a clear sense of purpose and direction, and continuity over time. The requirement for participation is obvious: as foreign issues increasingly affect domestic conditions, they will necessarily draw the attention of many agencies in the executive branch, of the Congress, and of the public generally. The need for a clear sense of national purpose may be less obvious but it is equally important. A cooperative international order can only be created by the cumulative effect of consistent actions over an extended period. Such consistency requires a guiding sense of purpose, which is essential also if the claims of specific groups which may run counter to long-term national interests are to be resisted. Such resistance is difficult unless it is buttressed by long-range national purposes which enjoy public support.

The world which U.S. foreign policy must address, and which the organization of the government must be designed to help it address, will be one of increasing complexity, interaction, difficulty and danger, but also one of crucial opportunities. We will return to these themes in the pages which follow.

THE PRESIDENT AND THE STATE DEPARTMENT

Approved For Release 2003/02/27 : CIA-RDP86B00269R000600030001-1

Approved For Release 2003/02/27 : CIA-RDP86B00269R000600030001-1

CHAPTER 3

EXECUTIVE OFFICE OF THE PRESIDENT

"The buck stops here."—HARRY S. TRUMAN.

"The real organization of the government at the higher echelons is not what you find in the textbooks or organization charts. It is how confidence flows down from the President."—DEAN RUSK.

THE NATURE OF PRESIDENTIAL RESPONSIBILITIES

The day-to-day conduct of foreign affairs is the business of the great departments and agencies of the executive branch. State, Defense, Treasury, and increasingly others: Agriculture, Commerce, Labor, the Energy Agency—possess the resources and bear the responsibility for helping to determine policy and for carrying it out. Under the Constitution the ultimate responsibility for foreign policy in the executive branch lies with the President. No matter how able and dedicated his Cabinet subordinates, the President bears great and untransferable responsibilities:

—To provide a conception of national purpose concerning the external world, a conception sufficiently responsive to American interests to enlist the support of the Congress and the people, and sufficiently coherent and farsighted to guide the various departments of the government toward effective and consistent policies.

—To take personal command of decision-making concerning issues which present threats or opportunities to the national interest.

—To insure that the Congress is fully informed of proposed foreign policy initiatives and their basis and that to the extent possible, Congress participates in their formulation.

—To resolve conflicts of policy concerning issues on which the executive departments, with their necessarily differing perspectives, cannot reconcile their views.

—To intervene in the making of decisions where the executive departments may be capable of resolving their differences but may do so in a manner which does not reflect the President's view of the national interest.

Approved For Release 2003/02/27 : CIA-RDP86B00269R000600030001-1

Approved For Release 2003/02/27 : CIA-RDP86B00269R000600030001-1

—To insure that the independent actions of the various departments which require coordination are in fact coordinated.

—To establish and maintain organizational and procedural arrangements which facilitate the performance of each of those tasks.

These responsibilities are heavy. The establishment of a farsighted and coherent view of U.S. interests in the world is particularly difficult, and particularly important, as the broad postwar consensus on the U.S. role in the world had come into question. The resolution of departmental differences has become more difficult as the number of agencies involved in foreign policy issues has grown. No important foreign policy problem now falls within the jurisdiction of a single department; energy, for example, concerns more than twenty. Monitoring the flow of action and decision at the departmental level is similarly more difficult, though it is essential both to ensure the appropriateness of decisions and the coordination of actions.

In meeting these responsibilities, Presidents depend on help of three kinds. The first is staff—able assistants, Presidential in perspective. The second is structure—a set of mechanisms and procedures in the Executive Office of the President designed to facilitate the swift and effective discharge of Presidential responsibilities. The third is strong performance from the Cabinet departments. We discuss them in order.

PRESIDENTIAL STAFF

The functions of Presidential staff are many. All are important. In addition to providing assistance to the President in the performance of each of the tasks just referred to, Presidential staff must:

—identify issues likely to require Presidential attention.

—structure those issues for efficient Presidential understanding and decision—insuring that the relevant facts are available, a full set of alternatives are presented, agency positions are placed in perspective.

—assure due process, permitting each interested department an opportunity to state its case.

—insure that affected parties are clearly informed of decisions once taken, and that their own responsibilities respecting those decisions are specified.

—monitor the implementation of Presidential decisions.

—assess the results of decisions taken, drawing from those assessments implications for future action.

Various other tasks may appropriately be undertaken by Presidential staff. But the essential tasks, we believe, are those described.

The defining characteristic of these tasks is that they embody staff responsibilities rather than line authority. They provide assistance to the President, not direction to departmental officials other than to convey Presidential instructions. There should be only one official with line responsibility in the White House, and that is the President himself.

The Assistant for National Security Affairs. It is eloquent testimony to the extraordinary abilities of the present Assistant to the President for National Security Affairs that he has met the requirements of that post while simultaneously serving as an active and effective Secretary of State. His holding of both positions has arisen from quite special circumstances, it is well established, and we make no recommendation concerning it. As we have stressed earlier, we seek not to address matters of topical interest, but the enduring and longer-term problems of government organization.

Having reviewed the responsibilities the Assistant for National Security Affairs must meet over the long term, we conclude that these responsibilities, involving essential personal assistance to the President, management of issues for Presidential decision, and the direction of the National Security Council staff, should normally in future be performed by an individual with no other official responsibilities. The actual choice would of course rest with the President.

The reasons for this are two. The first is simply that the responsibilities of that Assistant are heavy and important enough to require the undivided attention of even the ablest public servant. The second is that an Assistant to the President must be a facilitator of decision, a conduit to the President, a force for balance and even-handedness in the presentation and consideration of issues. These are staff functions. They are not easily made compatible with the responsibilities of a Cabinet officer, a line official who must necessarily act as the chief of a great department.

THE NATURE OF PRESIDENTIAL MACHINERY

Since 1947, the basic White House machinery for the resolution of major foreign affairs issues has remained remarkably stable. Though Presidents have used it quite differently, the structure of the National Security Council has remained basically the same. It has afforded its statutory members—currently the President, Vice President, Secretary of State, Secretary of Defense—and the others nor-

Approved For Release 2003/02/27 : CIA-RDP86B00269R000600030001-1

Approved For Release 2003/02/27 : CIA-RDP86B00269R000600030001-1

mally present, especially the Chairman of the Joint Chiefs of Staff and the Director of the CIA, a familiar if unevenly used mechanism for the airing of differences, the discussion of alternatives, the stating of recommendations, and the making of Presidential decisions. Perhaps even more useful has been the basis the NSC has provided for the development of a small staff, headed by the Assistant to the President for National Security Affairs.

The primary NSC mechanism for dealing with the majority of significant foreign policy issues is the NSC Senior Review Group/Interdepartmental Group structure. Under current procedures the President directs that an interdepartmental group undertake a review of a specified problem and formulate policy options. The papers of this group are reviewed by a more senior group, chaired by the President's National Security Advisor. Following this review, papers are either forwarded directly to the President for decision or become the basis for a NSC meeting, after which the President makes his decision. Presidential decisions are then expressed in decision memoranda distributed to all concerned departments. The systematic development of interagency positions for Presidential decision under this system has proven an effective procedure for dealing with significant and complex policy questions at the Presidential level.

In the Commission's view, the NSC structure should now be broadened in scope, membership, and use. As we suggest in Chapter 2, the nature of foreign policy problems facing this country has changed dramatically since 1947. So has the nature of international power. Increasingly, economic forces define the strength or weakness of nations, and economic issues dominate the agenda of international negotiation. National security policy is no longer a mix of simply of diplomatic and military affairs; properly understood, national security embraces economic policy too. Accordingly, we recommend that:

The membership of the National Security Council be expanded to include the Secretary of the Treasury, and its jurisdiction be enlarged to include major issues of international economic policymaking.

As indicated in Chapter 2, we also are aware that the distinction between foreign and domestic policy is increasingly tenuous, especially with respect to foreign economic policy. With the broadening of the NSC to include foreign economic considerations, the degree to which domestic considerations must be blended into foreign policy making also expands, and the need arises for an institutional link or bridge between the mechanisms through which domestic and foreign policy are made. In Chapter 5 we recommend the [illegible] council of the NSC and the appropriate domestic economic policymaking body to establish that bridge for formulating foreign economic policy. We believe it also appropriate that:

On an ad hoc basis, the President should invite to NSC meetings at which issues with important domestic implications are being discussed either Cabinet or staff officials concerned with domestic policymaking.

Finally, if the expansion of scope and membership of the NSC is to be meaningful, the NSC should be used more extensively as a deliberative body—the highest forum in the executive branch where the major issues of foreign policy are aired and debated, prior to presidential decision. The exact manner in which the NSC is used must be left to Presidential choice. But we believe that when the NSC's potential for informed and balanced consideration of issues is not used, important opportunities may be missed. If the NSC staff is to remain staff, then those having line operating responsibilities—the cabinet officers who are members of the Council itself—must be extensively involved in White House policymaking through the NSC mechanim.

Alternatives. The structure we recommend, which places foreign economic policy in a subcouncil designed to form an institutional bridge between the mechanisms through which domestic and foreign policy are made, is not the only system for which a strong case can be made. We have considered two main alternatives. The first is represented by the current situation, in which foreign economic decisionmaking is handled through a separate coordinating mechanism (the Council on International Economic Policy, or the Economic Policy Board), with the Domestic Council a third separate mechanism. The second alternative was the creation of a single overall policy council, either encompassing the full Cabinet or some sub-set of Cabinet officials responsible for both foreign and domestic policy.

We conclude that the first alternative is practicable, especially if the Secretary of the Treasury becomes a member of the National Security Council and close coordination is developed between the Presidential economic staff and the staff of the NSC. While the system is workable, however, it does not seem to us nearly so desirable as the one we propose. Economic policy is now so central both to foreign and to domestic policy that we believe it should not be considered separately. The desires of Cabinet departments may indeed be to treat it separately, so that the special perspectives of diplomacy or of military affairs on the one hand, and of international trade and monetary issues on the other are assured sympathetic forums of their own. But it is exactly the [illegible] coherence of policy through the integration of these perspectives. The severity of that problem is greatly eased if both kinds of policy issues are dealt with through

Approved For Release 2003/02/27 : CIA-RDP86B00269R000600030001-1

Approved For Release 2003/02/27 : CIA-RDP86B00269R000600030001-1

linked mechanisms and with the help of an integrated Presidential staff.

The second alternative, that of a Cabinet or an overall policy council, is in theory more attractive. In practice, however, we believe it would prove cumbersome and inefficient. There do remain issues—of base rights in Spain, for example, or the utility of housing allowances as an alternative to low income housing construction—which may need resolution at the White House level but which are so distinctively "foreign" or "domestic" as to put an unnecessary burden on those many members of the Cabinet, or even of an executive council of the Cabinet, who would take no interest in them, and whose presence might inhibit free discussion among those more directly involved.

Using the Machinery. The scope of jurisdiction accorded to the foreign policy machinery at the Presidential level is one consideration; the formality and regularity with which it is used are others. Recommendations concerning these latter factors cannot be made with confidence. The manner in which a President uses the machinery of the White House must conform to his own preferences and style of decision. We do not seek to control Presidential style, but we offer some observations about the alternatives.

Some Presidents may impart great regularity to the operation of the White House foreign policy machinery, establishing formal committees of fixed membership with regular meetings and established agendas. Others may prefer less fixed ad hoc arrangements and dig deep into the departments or the White House staff for substantive advice. Both tendencies have advantages, and both have drawbacks.

The disadvantages of formality may be significant as foreign policy problems increasingly cut across departmental lines and intersect with domestic and political considerations. Formal mechanisms originally well balanced and well conceived may become too narrow or rigid. Informality presents the opposite disadvantages: extensive attention may be accorded to some questions, while the consideration given others may be inadequate or late. Ad hoc decision processes, moreover, are likely to be less accessible than more formal ones; even when they produce successful results they may fail to meet the needs of Cabinet officials for regular channels of communication, clear opportunities to state their positions, and timely and explicit guidance once decisions are made.

There is obviously no perfect way to use the White House foreign policy machinery. Whatever approach a President chooses should be taken with attention to its weaknesses as well as its strengths, and hedges against potential vulnerabilities should be established. Fixed procedures must allow for some flexibility; ad hoc arrangements must be placed in an overall framework which insures full coverage of all important issues, and allows the representation of all relevant perspectives.

Another set of Presidential choices with important implications are those concerning who should chair the various permanent and ad hoc committees of the NSC. White House staff members bring a Presidential perspective to the task, but in such roles may too easily acquire line authority. Departmental officials as chairmen may feel obliged to protect departmental positions and consequently have difficulty getting agreement on decisions from other departments; their committees may succumb to patchwork consensus of bad decisions which all members can live with. But wherever departmental officials are of sufficient breadth, their use as chairmen can signal the perspectives to which the President wishes to give primacy, and it can also link decisionmaking more closely to implementation. A President must weigh what he hopes to accomplish with a given committee, and choose its head and membership accordingly.

We have spoken of "machinery," but the mechanical reference should not give a false impression. Policymaking is not a branch of mechanics; however wisely designed or carefully utilized, no machinery is adequate to assure its results. The selective use of various mechanisms and forums in ways which fit the particular issues, positions, and personalities involved is as much a part of the President's responsibility as is the necessity, finally, to decide the substantive issues.

The Role of the Departments. Whether or not Departmental officials are used to chair White House committees, they and their departments must be drawn deeply into the formulation of policy at the Presidential level, for many reasons. One is to avoid the bottleneck created when unnecessarily large numbers of decisions are reserved for the President. A second is to place a share of responsibility for the making of decisions in the hands of those having the most relevant professional experience and the deepest technical understanding of the issues. A third, as we have indicated above, is to put decisionmaking responsibilities, as far as possible, in the hands of those who must take responsibility for implementation.

Having made clear how important we believe strong departmental performance in the conduct of foreign policy to be, we turn in the following chapters to more detailed discussions of the special roles of particular departments, and of the changes we believe are needed to equip them to undertake those roles. In the course of these discussions, numerous additional elements of White House organization are spelled out. These include:

- [illegible] of Economic Advisers, which we believe needs more economic intelligence and planning capability, with one member having explicit responsibility for international eco-

Approved For Release 2003/02/27 : CIA-RDP86B00269R000600030001-1

Approved For Release 2003/02/27 : CIA-RDP86B00269R000600030001-1

nomic policy; and other interagency economics coordinating machinery (Chapter 5);

—creation of a Council of International Planning to engage in longer-term government-wide planning (Chapter 10);

—the role of a Science Advisory mechanism in managing interdepartmental studies of questions of global resource and environmental interdependence (Chapter 10);

—a revised role for the Office of Management and Budget in the defense and foreign affairs budget processes (Chapters 6 and 11).

CHAPTER 4

THE DEPARTMENT OF STATE

The President makes foreign policy. In the conduct of foreign affairs, however, the central department of government is, and must continue to be, the State Department. Only it has responsibilities across the full range of official U.S. external relations.

In recent years some have asserted that the State Department, to fulfill this central role, should direct and manage *all* foreign policy. Organizational steps have been proposed to put such a proposition into effect. For reasons discussed in Chapter 2 involving the wide range and sensitivity of world problems, we do not believe any agency can assume such authority for the resolution of foreign policy issues. The State Department cannot be expected to direct the Defense Department, or Treasury, or Agriculture, Commerce and the Energy Agency on many of the issues on which it is engaged with them, simply because foreign policy considerations are involved. But if the deepening and necessary involvement of many other agencies in foreign policy makes such central management by any one department impossible, it also makes central coordination and leadership imperative. Below the President only the State Department can perform these functions.

Foreign offices the world over fulfill three fundamental responsibilities. First, they serve as the central locus of information about countries and conditions and events abroad; although assisted by intelligence agencies and indeed by many other agencies, it is in the end the foreign offices which marshall the information and form the judgments on which the policies and actions toward other countries are founded. Secondly, foreign offices have the principal role in formulating policies and recommending to heads of government courses of action to govern the country's external relations; in so doing they work with other parts of the government which have international interests and responsibilities. And, thirdly, through embassies, posts and missions, and by dealing with foreign diplomats and international organizations, foreign offices maintain communication with other countries.

In reviewing the organization of the government for the conduct of foreign policy, we have devoted particular attention to the Department of State, and has sought to evaluate its performance in the fulfillment of these basic functions. Many of our findings and

Approved For Release 2003/02/27 : CIA-RDP86B00269R000600030001-1

Approved For Release 2003/02/27 : CIA-RDP86B00269R000600030001-1

recommendations are discussed in chapters of this report relating to the various specialized aspects of foreign affairs—international economic, national security, intelligence, etc.—where the State Department has only a part, albeit an important part, of the action. In this Chapter we abstract some of the recommendations from the more detailed presentations which bear quite directly on the operation of the Department, and present others not elsewhere developed, in order to provide an integrated view of what we believe to be the changes necessary in the State Department to make it better able to meet the changing conditions in the world around us. In so doing we propose to discuss, first, the basic role we envisage from the Department and the organizational changes which would seem to emerge from that role; the Office of Congressional Relations and the role of the Deputy Secretary; and, third, the adjustments we believe necessary in the overall management of the Department to achieve fuller effectiveness. A final section of this Chapter summarizes the changes recommended in the organization of the State Department with an organization chart.

MAJOR ROLES OF THE DEPARTMENT OF STATE

The Information and Assessment Role. Research undertaken for the Commission highlights many instances in the past where policymakers have failed to understand why foreign governments were taking certain actions, or to anticipate the impact of a U.S. action, and thus have designed actions aimed at one objective which in fact triggered contrary reactions by foreign governments. Limiting such mistakes by having available the most reliable information and the most profound understanding of foreign events, personalities and conditions is a first order of importance. In earlier periods foreign policymakers could rely on the relative strength of the U.S. to provide a comfortable margin for error. Today, with the increasing interdependence of U.S. security and economic interests with the interests of other countries, policy choices must take more precise account of the impact of U.S. actions on foreign governments.

In the future environments we have postulated for American foreign policy, this core of information, understanding and judgment—this foreign assessment—will be critical to policy choices. Major foreign policy issues will involve domestic agencies, with their own sources of information, and their own interests. But the State Department will be in the best position to assess the impact of decisions and actions abroad.

It will frequently be necessary for the State Department to argue against a policy which may be attractive domestically (e.g. the sale of agricultural products under certain conditions) because of the negative effects on national foreign policy and goals. This position will not be easy or comfortable; it will be impossible to maintain unless the Department is both correct in its assessments and aggressive in arguing them.

We believe, therefore, as we discuss in Chapter 9, that far more than ever before the State Department and the Foreign Service must be equipped to fulfill this role of foreign assessment; that is, an understanding of why foreign governments take, or do not take, certain actions; the anticipation of the actions foreign governments are likely to take; and, in light of that understanding and anticipation, the prediction of the impact actions will have and designing initiatives or reactions accordingly. Foreign Service reporting is one component of this core understanding, assessment and judgment.

The Commission believes that the assessment role will increasingly become the major "comparative advantage" of the Department of State. Other departments will have superior competence in specialized tasks; other departments will be able to participate in direct negotiations; other departments will have close and continuing contact with their counterparts in other governments and international organizations. But no other department can provide the government with detailed understanding and judgment of the dynamics of foreign societies and governments and multilateral groupings and agencies. The Secretary and his supporting staff must assure that the departmental and foreign services fulfill this role and capitalize upon it in maintaining a leadership position in the conduct of foreign policy.

The Policy Development Role. For all but the simplest issues, developing policy is a complex process. A wide mixture of individuals, agencies, perspectives and goals are involved. Divergence is inevitable. Conscious and persistent efforts at reconciliation are the norm, not the exception. The Commission thus has devoted much effort to those issues which involve many parts of the government, especially foreign economic policy, global environmental and resource problems, defense and arms control.

In each of these the State Department has an important role but shares responsibility with other agencies and departments. The Department's central place in the foreign affairs community requires it to monitor, oversee, and influence foreign activities of other agencies if consistent policy in all these areas is to be developed. Elsewhere in this report the nature of these problems and specific recommendations are set forth. Here, in looking at the organization of the Department of State, we summarize those findings which relate to the role the Department should play in the critical process of policy development.

On the matter of *international economic policy*, Chapter 5 explains the complexities, and the interplay between the "foreign" and the "economic" considerations. It highlights the complications which arise

Approved For Release 2003/02/27 : CIA-RDP86B00269R000600030001-1

Approved For Release 2003/02/27 : CIA-RDP86B00269R000600030001-1

from the fact that responsibility for domestic economic policy is distributed among a great many departments and agencies. In that chapter and in Chapter 12, the Commission makes recommendations for developing the necessary expertise within the Department to permit it to fulfill its mission, and it suggests what that mission should be; notably, one of sharing the responsibilities with other agencies, and a close participation and monitoring by the State Department in all aspects relating to foreign relations.

The State Department has taken some steps to strengthen its economic capability, but much more needs to be done. Traditionally the Department and Foreign Service have tended to downgrade economic matters in favor of political affairs and, compared to the domestic agencies, there is a thinness of economic expertise. This imbalance has been exacerbated by the normal political preoccupation of most Secretaries of State. Geographic bureaus dominate the working level activity of the Department and assignments in these bureaus are widely seen as having higher career awards than employment in the functional bureaus; for example, those dealing with economics or with oceans, environment and scientific affairs. Thus recruitment suffers and with it the ability to command the respect of other units of the Department or other agencies.

This situation may be most critical for what we have called global issues—those questions of global environmental and resource interdependence such as, for example, weather modification or atmospheric pollution, which are rapidly becoming of much greater importance.

The need to equip the Department of State better to deal with these issues and to play a balancing role in foreign economic policy is presented extensively in other chapters. In particular the discussion and recommendations on personnel highlights the need for improving the quality of personnel in the economic and scientific fields. But it is also necessary to assure that interdependence and economic issues are more completely integrated with each other and with the whole body of foreign policy. For that reason we have recommended that the Under Secretary for Economic Affairs should be broadened in scope to be Under Secretary for Economic and Scientific Affairs. We are recommending that the Under Secretary therefore be responsible for four closely related bureaus:

(a) For International Economic and Business Affairs;

(b) For Energy, Transportation, and Communication Affairs;

(c) For Oceans, Environmental, and Scientific Affairs; and

(d) For Food, Population and Development Affairs.

The effect of this recommendation we hope will be to create a coherent economic-scientific-technological complex within the Department of State.

In the area of *national security, defense and arms control*, somewhat parallel problems arise in interagency relations, in the organization of the Department and in the personnel competence to perform the role effectively. The Department is more closely engaged in defense and arms control issues, and has a more direct impact on the development of policy in these areas.

Accordingly, the Commission is recommending in Chapter 6 that the position of Under Secretary of State for Political and Security Affairs be established as a successor to the existing positions of Under Secretary for Political Affairs and Under Secretary for Security Assistance so that a strong, institutionalized voice for these issues is placed in the top command of the Department. This change would provide a single, top level official with responsibility for political-military affairs, would bring security assistance into its proper relationship with the larger range of security issues, and would provide a focal point for policy integration of political and defense matters.

The Commission also believes other steps are necessary in the defense and arms control area. As in the case of economic and global interdependence issues, personnel competences must be upgraded and recommendations to this effect are set forth in the Personnel Chapter. Similarly, the regional bureaus of the Department, charged with the direct conduct of most bilateral relations, should improve their political-military capabilities. Above all the Department of State must provide its contribution and participate effectively in national security policy as one aspect of its central responsibility for monitoring the total U.S. foreign concerns; to do so such questions must receive continuous and competent attention.

Finally, on the question of *public diplomacy*—foreign cultural and information programs—the Commission has concluded (Chapter 9) that the function of advocacy of foreign policy, currently a part of the responsibilities of the U.S. Information Agency as well as of the State Department, can most effectively be carried out entirely in the Department of State. It recommends that all programs which articulate and explain foreign policy should be combined in a new State Department Office of Policy Information. The other major change recommended in Chapter 9 affecting the Department of State in this field calls for the transfer of functions currently carried out by the Bureau of Cultural and Educational Affairs to a new Information and Cultural Affairs Agency (ICA) along with the bulk of USIA.

To summarize, then, in order to serve the policy development role of the Department of State, the Commission has found the need to establish two major functional arms at the top level of Under Secretary—one for Political and Security Affairs and the other for Economic and Scientific Affairs. In addition, a high level office should be established to deal with the public diplomacy responsibilities of the Department.

Approved For Release 2003/02/27 : CIA-RDP86B00269R000600030001-1

Approved For Release 2003/02/27 : CIA-RDP86B00269R000600030001-1

The Conduct of Relations. However satisfactory policy decisions may be, and however good the assessments upon which they are based, desired outcomes are dependent upon turning decisions into actions. Thus the third primary role of the Department of State—historically a central responsibility—is the actual conduct of relations with other governments and the representation of the United States in international organizations. These tasks—the essence of diplomacy—will continue to be the primary responsibility of the Department's geographic and functional bureaus in Washington, which must assure that relations are expertly conducted through embassies, missions and posts abroad. Recommendations relating to this matter are presented in Chapter 9.

The geographic bureaus of the Department are designed to be focal points in Washington for all U.S. official activity relating to individual foreign countries and regions. These bureaus cannot formulate policy in isolation, since they must take into account both the perspectives of the functional portions of the Department of State and of other agencies and departments. But just as the Department as a whole must have substantive expertise even in those areas where more specialized agencies are the major actors, the geographic bureaus cannot be totally dependent upon the functional bureaus. Economic issues, for example, look different from the perspective of economic officers in a regional bureau than from the viewpoint of economic officers in the Bureau of Economic and Business Affairs. The same is true for other specialties. The geographic bureaus, therefore, must have the ability to link regional and substantive concerns, to translate broad policy in functional areas to regional applications. For this reason, we believe that as a general rule, Deputy Assistant Secretaries in the regional bureaus, rather than heading up one division of the geographic area of the bureau, should have functional responsibilities for the entire bureau. The former pattern has the effect of under-emphasizing functional considerations at a time when the geographic bureaus must take a broader perspective if they are to be effective. Such functional responsibilities of Deputy Assistant Secretaries in regional Bureaus, moreover, can coincide with responsibilities of the functional Under Secretaries.

CONGRESSIONAL RELATIONS AND THE ROLE OF THE DEPUTY SECRETARY

The foregoing discussion outlines the changing role of the Department of State and emphasizes the adjustments needed to meet the specific responsibilities centered in the D[illegible] and assessment role, the policy development role, and the conduct of relations. The fulfillment of these responsibilities depends also on a number of other aspects of organization within the Department. Thus we have made extensive recommendations on the personnel structure for foreign affairs in Chapter 12, fully aware that the capability and performance of people is at the heart of effective operation. The budget and its place in coordination among departments is taken up in Chapter 11, especially the need for improved processes in marshalling resources to foreign policy objectives. In Chapter 9 on the Practice of Diplomacy, we heave discussed the important part played by the country directors.

Before turning to the key question of managing the Department of State, we want to make brief comments on two offices and functions: the Office of Congressional Relations and the Deputy Secretary.

An especially important staff function is the support of the Secretary and Department in relationships with the Congress. The Commission is aware that many advocate that the Office for Congressional Relations (H) be expanded and upgraded to insure more responsiveness to, and improved consultation with, the Congress. We have no quarrel with this idea, but we believe effective Congressional relations must be the responsibility not only of the Secretary and of this office of Congressional Relations, but of all the principal officials of the Department, down through at least the deputy assistant secretary levels. Thus the Office of Congressional Relations should not act as a buffer between officials of the Department and Members of Congress or Congressional committees; rather, it should facilitate an increasing range and depth of such contacts.

The importance of the position of the Deputy Secretary cannot be overemphasized. The Commission, as other commissions before it, has been impressed with the difficult, multiple role which the Secretary must fill. He is the personal adviser to the President on foreign policy. He is the official voice of the United States in dealing with other nations—to an extent that his personal presence or absence at a meeting or a social function becomes itself a factor in foreign policy. He must represent the executive branch to the Congress in all aspects of foreign affairs where responsibility is shared. In many of these activities he cannot be substituted. But then, in addition and not least, he must manage one of the most complex organizations of government: The Department of State.

Clearly the Secretary needs a Deputy in whom he can put the greatest reliance. However, this relationship—Deputy and principal—difficult in any organization, is especially sensitive with the Secretary of State for the very reason that he can pass to his Deputy only a limited [illegible] responsibilities. The Deputy cannot be an *alter ego* in the usual pattern. It makes it all the more important, therefore, that the

Approved For Release 2003/02/27 : CIA-RDP86B00269R000600030001-1

Approved For Release 2003/02/27 : CIA-RDP86B00269R000600030001-1

Secretary delegate as much as possible of the management of the Department. At a minimum the Deputy should be able to integrate the multiple geographic, functional and staff offices of which the Department is comprised. He should also be able to assist the Secretary in marshalling the personnel and administrative support elements—the resources of the Department—to the basic policy purposes.

OVERALL MANAGEMENT OF THE DEPARTMENT OF STATE

Traditionally the State Department, and particularly the Foreign Service, has accorded little attention to management. Indeed there is a general antipathy towards the very idea of management. We believe that in large measure this arises from a significant misunderstanding of what management really is.

Management is not housekeeping. Management is not even administration, although both administration and housekeeping are important aids to management. Management is direction and control. It follows that, only the Secretary and the Deputy Secretary can manage the Department in the sense of pulling together all the substantive policy effort and the personnel and administrative support into a single effective whole. Only they are in a position to do so. The Under Secretaries and the Deputy Under Secretary "for Management" manage their own areas of responsibility, just as each Assistant Secretary manages his Bureau, and each Ambassador manages his Embassy. For the Department as a whole, the Under Secretaries have responsibility for the policies and activities falling within their functional areas, and they assist the Secretary and Deputy Secretary by directing such policies and activities in all bureaus.

This concept of the nature of management has two important implications for the Department. In the first place, the Secretary and the Deputy cannot delegate the management of the Department as a whole. They can delegate authority to supervise functions and activities, but the control and direction of the entire Department remains with them. If personnel and budgets and communications are to be marshalled in support of policy in a single strong effort, only the Secretary and Deputy Secretary can bring it about. Their personal involvement in these matters makes the difference between a strong and a weak Department.

In the second place, this concept of management underlies recommendations we have made in the Personnel section of the report, notably those concerning the training and experience Foreign Service Officers and other government officials must receive in the practice of management—direction and control—if they are to fulfill their responsibilities when they are called upon to run an Embassy or a Bureau in the Department. In the Personnel Chapter we have recommended quite specific steps that must be taken to improve the management of Departmental divisions, and posts and missions abroad.

To assist the Secretary in the management of the Department we have made a number of specific suggestions relating to the several functions discussed in this report. Here we would only make a few recommendations which relate first, to the so-called management side of the Department and second, to the responsibilities of some of its senior officials.

With respect to the Deputy Under Secretary for Management we believe, that it is important, once having removed the notion rather widely held that he manages the Department, to recognize that he does play a critical role in marshalling the supporting services for the Secretary in the Secretary's management of the Department. We recommend that:

The position of Deputy Under Secretary for Management be elevated to Under Secretary.

In this new post the Under Secretary for Management should insure that organization, internal processes, and resources are well matched with the requirements of policy and operating activities.

One important reason for raising the level of this position to Under Secretary arises from the heavy responsibilities we would assign to him for directing the proposed Foreign Affairs Executive Service as detailed in Chapter12. The Commission attaches great importance to this new personnel concept for selecting and assigning the foreign affairs leadership of the future across departmental lines.

To assist the Secretary and the Under Secretary for Management in assessing both the Department's performance as an organization, and the effectiveness of field posts and missions in conducting our foreign relations, the Commission is recommending in Chapter 9 that the Office of the Inspector General of the Foreign Service, with representatives of other agencies, be given a mandate to inspect the overseas activities of the other agencies associated with embassies and consulates in addition to those of the Department of State.

On a related matter, we believe that the expanded responsibilities of the Inspector General for Foreign Affairs, the proposed creation of an Assistant Secretary of State for Food, Population and Development Affairs, the work of the new Congressional Budget Office, and the expanded capabilities of the General Accounting Office, together provide adequate inspection capability for foreign assistance programs. The Commission thus recommends that:

The Office of the Inspector General of Foreign Assistance be abolished, and its analytic functions be transferred to the proposed Assistant Secretary for Food, Population and Development Affairs.

Approved For Release 2003/02/27 : CIA-RDP86B00269R000600030001-1

Approved For Release 2003/02/27 : CIA-RDP86B00269R000600030001-1

The Inspector General for Foreign Affairs should include close field scrutiny of foreign assistance programs in the course of "conduct of relations" inspections.

A major and continuing problem of the Department of State has been the ambiguous relationships and jurisdictions among its senior officials. Currently the Department has eight individuals below the Secretary and Deputy Secretary and above the Assistant Secretary level: three Under Secretaries, a Deputy Under Secretary, a Counselor and three Ambassadors-at-Large. The roles of none of these officials can be considered clear-cut. The Commission therefore would press for the establishment of the following general principle:

Under Secretary positions should be reserved for supervisory officers having responsibility for specific portions of the Department's work; for example, Political and Security Affairs, Economic and Scientific Affairs, and Management. Under Secretaries are senior officers by virtue of their direct management responsibilities for subordinate bureaus and their responsibility for regional bureau activities in their assigned functional areas. These positions should not normally be used for "ad hoc trouble shooters" or "roving ambassadors."

Clearly the Secretary will wish to assign to a single individual responsibility for special new and important problems, for conduct of important negotiations, or for overseeing develping situations. Flexibility of structure is essential to meet these very real and difficult needs. Normally, however, we do not believe that the positions and titles of Under Secretary should be used for these purposes. Instead, the Commission recommends that:

The positions of Counselor of the Department and Ambassadors-at-Large should be used for the special assignments requiring senior attention, under the direction of the Secretary. The Counselor should remain a permanent position, while Ambassadors-at-Large should be appointed for shorter periods of time and specific projects.

SUMMARY OF CHANGES PROPOSED FOR THE DEPARTMENT OF STATE

The major organizational changes proposed throughout this report which pertain to the Department of State can be seen by comparing Table 1, *Current Departmental Structure*, with Table 2, *Proposed Structure*. These changes are as follows:

(1) The Under Secretary of State for Political Affairs would become the Under Secretary of State for Political and Security Affairs; the position of Under Secretary of State for Security Assistance would be abolished.

(2) The responsibilities of the Under Secretary for Economic Affairs would be broadened to make this official the Under Secretary for Economic and Scientific Affairs.

(3) Responsibilities at the functional bureau level, currently divided between the Bureau of Economic and Business Affairs and the Bureau of Oceans and International Environmental and Scientific Affairs, would be expanded to form four bureaus:

—Economic and Business Affairs.

—Food, Population and Development Affairs.

—Oceans, Environment and Scientific Affairs.

—Transportation, Communication and Energy Affairs.

(4) A new Senior Officer for Policy Information would direct the press, public affairs and policy information functions currently in the Department and those which would be added to the Department from the U.S. Information Agency.

(5) The Bureau of Cultural and Educational Affairs would be transferred to the proposed Information and Cultural Affairs Agency (ICA).

(6) The current Deputy Under Secretary for Management would be upgraded to full Under Secretary status.

(7) The Bureau of International Organization Affairs would be reconstituted as a Bureau of United Nations Affairs, with its current functional activities transferred to new bureaus outlined under item 3 above (see Chapter 9).

(8) A Special Assistant to the Secretary for Humanitarian and Human Rights Affairs would be created (see Chapter 8).

(9) The Office of the Inspector General for Foreign Assistance would be abolished.

(10) The Foreign Service Institute, to reflect its new responsibilities (Chapter 12) would be renamed the Foreign Affairs Institute.

In terms of numbers, these proposals leave the top command of the State Department at the same level as previously: one Under Secretary position would be abolished, one deputy Under Secretary would be raised to Under Secretary. At the bureau level, one bureau would be transferred to another agency and two additional bureaus would be divided out of existing bureaus. There would be a net increase of one bureau and one senior officer, but of relatively little additional staff. In addition, one office—that of Inspector General for Foreign Assistance—would be abolished.

Approved For Release 2003/02/27 : CIA-RDP86B00269R000600030001-1

Approved For Release 2003/02/27 : CIA-RDP86B00269R000600030001-1

TABLE 1.—Department of State as currently organized

DEPARTMENT OF STATE AS CURRENTLY ORGANIZED

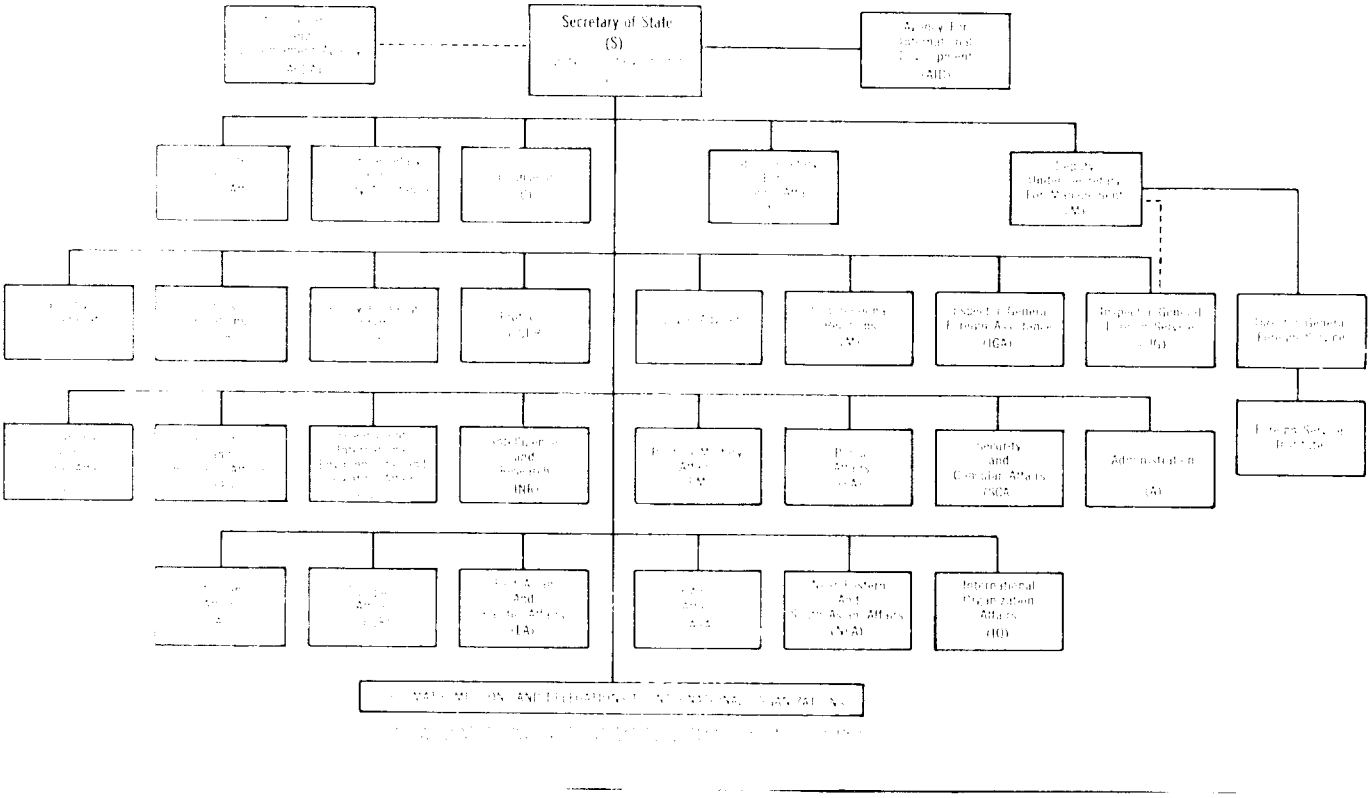

TABLE 2.—Department of State as proposed

DEPARTMENT OF STATE AS PROPOSED

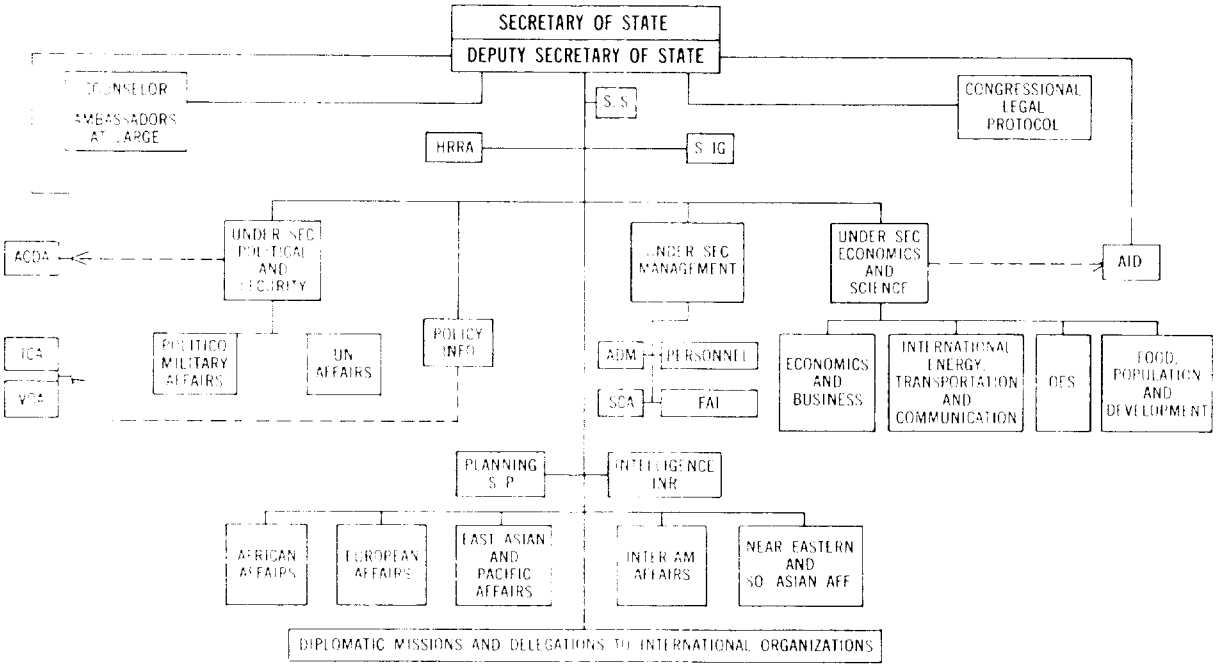

ACDA Arms Control and Disarmament Agency
ADM Bureau of Administration
AID Agency for International Development
FAI Foreign Affairs Institute
ICA Information and Cultural Affairs Agency
OES Oceans, Environment & Science
SCA Bureau of Security and Consular Affairs
HRRA Special Assistant for Humanitarian and Human Rights Affairs
INR Bureau of Intelligence and Research
S/IG Inspector General for Foreign Affairs
S/P Policy Planning Staff
S/S Executive Secretariat
VOA Voice of America

Approved For Release 2003/02/27 : CIA-RDP86B00269R000600030001-1

Approved For Release 2003/02/27 : CIA-RDP86B00269R000600030001-1

THE CONDUCT OF FOREIGN POLICY

Approved For Release 2003/02/27 : CIA-RDP86B00269R000600030001-1

Approved For Release 2003/02/27 : CIA-RDP86B00269R000600030001-1

CHAPTER 5

ORGANIZATION FOR INTERNATIONAL ECONOMIC POLICY

THE NATURE OF THE PROBLEM

International Economic Policy is concerned with the wide variety of interactions between the economy of the United States and the economies of other nations—trade and investment, resource requirements, monetary exchanges and financial flows, travel and transport, foreign assistance programs and the workings of international businesses, to name the more important ones. The issues arising from our international economic life are becoming more complicated as well as more interdependent. They will require a fresh and greater emphasis in both our domestic and foreign policymaking processes.

This is partly a matter of sheer quantity. The volume of international economic transactions has grown at unprecedented rates over the past decade and more, substantially faster than the growth of domestic economies. And this integration of the world economy is likely to continue, for it is fostered by such fundamental forces as the growing ease of communication, the speed of transportation, the urge for higher living standards, and the vast accumulation and spread of knowledge.

As international economic relationships increase, so do interdependencies. Mutual benefits will normally flow from these interdependencies, as trade provides cheaper sources of goods and broader markets for national products, and as financial flows supply needed capital for some and investment outlets for others. But interdependence also can become uncomfortable. Sources of critical materials may prove vulnerable to economic or political forces. Business and labor interests may have difficulty adjusting to changes in the flow of international trade. As governments have accepted responsibility for meeting public expectations for higher standards of living, and for more satisfactory distributions of income, these dependencies become crucial. In an age of interdependence, no government can fulfill its commitments to its own people except through cooperative arrangements for foreign governments and overseas economies. At the same time, the U.S. government should seek to encourage an international climate conducive to the play of market philosophy which prevails at home.

Approved For Release 2003/02/27 : CIA-RDP86B00269R000600030001-1

Approved For Release 2003/02/27 : CIA-RDP86B00269R000600030001-1

One further aspect of foreign economic policy needs emphasis. This country can no longer play the dominant role it did in establishing and maintaining the framework of the economic system of the Western World after World War II. Economic power—and with it economic responsibility—is now far more widely diffused. Nonetheless, the United States is still the leading national economy; the size and power of our economic system make it essential that, in conducting our foreign policies, we understand the implications of particular actions—the degree to which what we do will affect the whole of the international monetary, trading, and investment systems. That understanding is critical because the condition of the international economic system will in turn affect the economic health and stability of our political and security relationships with others, as well as our own economic health. Consequently, coherent policy for the United States—even more than for other countries—will continue to require a long view of our interests in international economic order, a clear understanding of the order we would like to see evolve, and an understanding of the relation between our economic, political and security objectives.

The implications of these facts are plain. Foreign economic policy looms large in the concerns of both foreign policy and domestic. In specific instances, a particular economic interest may need to be subordinated to—or blended with—strategic, security, or diplomatic considerations. In other instances, it may properly dominate, perhaps reflecting crucial domestic priorities. But the fact that these considerations are linked—that political or foreign considerations cannot exist in watertight compartments separated from economic or domestic interests—is now clear. Such recent developments as the effect of U.S. balance of payments drains and the depreciating dollar on our security and political relations, or the impact of Middle East politics on our energy supply make the point plainly.

The situation is further complicated by the fact that although a number of interests, constituencies, agencies, and Congressional committees participate in the making of foreign economic policy, foreign economic policy has not been the *central* concern of an important constituency, line agency or Congressional committee; each is focused mainly on either foreign political and security concerns on the one hand, or domestic economic concerns on the other.

Conflicts and competition among a variety of groups in setting policy are healthy and necessary in a democracy. We do not want to isolate foreign economic policy from the mainstreams of foreign or domestic policy. Yet, we do want it to have coherence and design. It is against this background that we approach the organizational question.

THE ROLE AND OBJECTIVES OF ORGANIZATION

The processes of policy analysis, formulation, and implementation take on various colorations depending upon whether the problem is first perceived and policy options first considered, and on which other interests are then brought to bear on those options. It is easy to imagine, for instance, that a decision originating in the Department of Agriculture affecting world food supplies and costs might differ sharply from decisions on the same issues originating in the Department of State. The point is not that one decision is likely to be better than the other, but that both will be inadequate unless they reflect the full range of relevant concerns—those of the American farmer, consumer, taxpayer, and of U.S. foreign policy priorities.

The problem is not confined to executive departments, for many decisions affecting foreign economic policy—often important in themselves but of peripheral concern in the context of a larger piece of domestic legislation—may take on the coloration of a particular Congressional committee.

A simple call for coordination is not enough to deal with this problem. Content must be poured into that word, particularly to ensure that foreign economic policy gets the increased awareness and attention it requires. In formulating its recommendations, the Commission proposes a mixture of more or less fixed organizational structure and flexible processes designed to:

(1) Encourage a consistent general framework in foreign economic policy responsive to and integrated with vital considerations of domestic and foreign policy. Foreign economic policy, in short, must bridge foreign and domestic policy. No organizational structure or simple set of general principles can by itself assure consistency in the treatment of a multitude of policy issues. But they can help make sure that the relevant questions are asked, a variety of perspectives are brought to bear, longer-term considerations are not submerged in the urgency of the day, and that policies are more clearly articulated, to our citizens and to foreign governments.

(2) Permit and even encourage a broad sharing of authority and responsibility for the formulation of policy, while providing protection against narrow and isolated views becoming dominant. In our complex society, many parishes have a right to be heard. They need clear access to and participation in the decision making process. But decision making should not be merely a tug of war among competing interests. A variety of organizational means—encompassing personnel policies, Departmental structure, the choice of Cabinet officers, flexible use of committees, and Presidential articulation of a set of guiding [illegible] excessive parochialism and encourage a broader perspective in approaching foreign economic policy.

Approved For Release 2003/02/27 : CIA-RDP86B00269R000600030001-1

Approved For Release 2003/02/27 : CIA-RDP86B00269R000600030001-1

(3) Encourage greater foresight in perceiving, analyzing and attacking problems at an early stage. The human capacity to foresee the future is uncertain and limited. But for problems to be neglected because they fall through the cracks of established jurisdictions, or because no analytic capacity has been brought to bear, is inexcusable. For this reason the Commission has given particular attention to strengthening the ongoing mechanisms for monitoring and evaluating, and for bringing to policymaking levels the significant developments affecting our foreign economic policy in a fast-moving world.

(4) Provide adequate assurance that, once decisions are made, they are followed up and implemented in the spirit intended. Again, the Commission has put special emphasis on the need for strengthening our capacity to follow through on decisions taken, and to evaluate their results over time.

Fashioning organizational structures and processes to meet these objectives is not easy, even in theo We recognize that the relative advantages and disadvantages of specific proposals can be subject to endless debate, that others might reach different conclusions on some of the specifics, and that any President or agency head will want to retain flexibility to match organization to men and circumstances. For all these reasons, we have tried to balance organizational blueprints with flexible processes. We recognize that our objectives in recommending both may be met by alternative means, which under certain circumstances may be even more appropriate.

Finally, we have eschewed change for the sake of change. The present basic structure, while not ideal, has much to commend it.

ORGANIZATION AT THE "TOP"

Assisting and Advising the President. Only the President is in a position to integrate international economic policy with foreign and domestic policies, and to provide the required focus and stimulus for decision and action. He must direct the formulation of international economic policy—just as he does domestic economic or foreign policy and its increasing importance will demand his increasing awareness.

He will need help in dealing with international economic problems to assure that necessary issues come to him for decision and unnecessary ones do not; that issues for decision have been fully staffed and relevant viewpoints presented; that newer and emerging problems are given appropriate attention; and that issues are dealt with in timely fashion.

Approved For Release 2003/02/27 : CIA-RDP86B00269R000600030001-1

In light of these and other needs, we propose three organizational measures:

(1) *A senior Assistant to the President should be charged with the central White House staff function in economic policy, both domestic and foreign. Having direct personal access to the President and strong qualifications drawn from economic and/or business experience, this Assistant should participate or be represented in all relevant meetings of the National Security Council and of domestic policymaking bodies (such as the Domestic Council, the Troika or Economic Policy Board). He would be the Executive Secretary and Director of staff of the proposed joint Subcouncil on International Economic Policy.*

He should have no operational or representational responsibilities that would undermine his ability to work closely with—and not compete with—cabinet officials. His function is a delicate one: to facilitate, on occasion to prod, to think innovatively, to translate technical debate into lay language, to observe the way Presidential decisions are acted upon and to bring deficiencies to his attention, thus helping to monitor the implementation of policy. In the perspective of the President, he will need to make sure that in domestic councils, foreign policy concerns have been brought to bear, and in foreign policy decisions domestic economic implications are not forgotten. But we do not contemplate he will assume a public posture—become a Presidential "spokesman" and an independent bureaucratic force, usurping the duties of the responsible line officials. In line with this conception, occupants of the position should not be subject to confirmation by the Senate. His immediate staff should be small.

(2) *The President should appoint, and have available to him for advice, a senior and representative group of people drawn from the private sector who are well equipped by training and experience to assist in formulating foreign economic policy in the national interest—an International Economic Policy Advisory Board. The Board would be provided a small secretariat to help prepare meetings, disseminate information and focus discussion on relevant issues. It would meet at least quarterly to review issues raised at its own initiative or by the government. The Board should have direct access to the President, and the President should himself take the initiative to meet with it from time to time. The Board should have wide latitude to set up ad hoc groups, commission studies and otherwise equip it to carry out its functions. It should replace most, if not all existing advisory groups dealing with aspects of international economic policy.*

[illegible] kind of advisory board—for instance, in the areas of intelligence and disarmament. Such boards can prove particularly useful when responsibility for policy is shared

Approved For Release 2003/02/27 : CIA-RDP86B00269R000600030001-1

by several agencies, and where the policy itself poses difficult or sensitive problems. We believe that a board to advise the President on foreign economic policy is particularly appropriate since the matters it involves cut across much of the fabric of our private economic life. The President should therefore have direct exposure to thinking outside of official channels, and conversely the ability to generate broader public understanding and support of policy positions.

In addition, the Commission believes that the nation's ability to deal with its foreign economic problems would be substantially enhanced if the President and his advisers had available an independent study group dedicated to identifying and analyzing longer-term developments in this area and investigating their significance for policymaking. We are impressed by the difficulty any operating agency experiences in undertaking such research, given the pull of its immediate responsibilities.

(3) *In order to provide a focus for objective study of longer term international economic problems and a more effective early warning system for identifying the major related policy issues on the horizon, we believe an independent study group on international economic issues should be created under the auspices of the Council of Economic Advisors.*

The proposed study group, comprised of a limited number of senior specialists, should have the broadest possible mandate as to areas of study, drawing upon the expertise of relevant agencies to augment its own resources. It should work closely with the various departments to improve methodologies, cross-check its data, and assure that research findings are broadly shared. Its particular focus, however, should be on issues of longer-range importance to the White House, for example, the problem of this country's having to deal with the increasing number of economies that are centrally controlled or planned. The group should not be involved in current policy decisions or operations; neither should it have coordinating responsibilities for the research activities of the departments.

Interfacing of the Departments. Under the President the major responsibility for initiating, formulating and implementing policy should lie with the major departments. We are convinced that delegation of large authority to a White House staff—with its implied corollary of a sizable staff—will erode the competence, authority and thus inevitably the quality of the Departmental executives and their staffs. Yet if his policy is to be successful, the President needs effective Cabinet officers, and highly competent Departmental bureaucracies. The President also will need to work closely with the Congress—and substantive interplay with the Congress on the mass of policy issues must perforce fall to Cabinet officers and their principal assistants under Presidential policy guidance. The competence and initiative of departmental officers can be maintained only by their full participation in policy formation.

The Commission is persuaded that in this area, the simplicity of a single centralized structure must be avoided. If foreign economic policy were simply an arm of foreign or of domestic economic policy, its management could be entrusted to a single department. However, since we believe that foreign economic policy cannot be considered the exclusive concern of any single executive department or Congressional committee, but must reflect the interplay between foreign and economic policy considerations, neither pattern is suitable. That conclusion is reinforced by the consideration that responsibility for domestic economic policy is not centralized in the U.S., but is dispersed among a number of departments and agencies. Thus, the answer must be sought in effective relationships among State, Treasury, Commerce, Agriculture, the Energy Agency and the other Departments having domestic economic responsibilities, with each bringing its own strengths to the process of policy formation.

The State Department's principal task is obviously the formulation and conduct of foreign policy, encompassing the full range of our relations with other nations. In this context it must follow closely and influence trends abroad—making sure that the President and his advisors are aware of the probable consequences of our decisions before they are made rather than afterwards. State, through the Foreign Service, also must bear the brunt of official activities and representation abroad. These central responsibilities are large ones; they encompass economic as well as political and security matters, but the orientation is inevitably outward and generalist.

Observers have commented again and again on the systematically lower professional regard accorded economists in the Department, the relative thinness of their economic expertise in various specialties; the built-in incentives for generalists; and the political preoccupation of the Secretaries. We know that State has taken some steps to strengthen its economic capability—the greatly improved economic instruction offered by the Foreign Service Institute, for example—but much more needs to be done. We make recommendations below. But these are not designed to place the Department in a dominant position with respect to foreign economic policy formation. To discharge that role would require the Department to become so entwined with the warp and woof of domestic economic policy as to jeopardize its primary mission, and would cloud the interaction which characterizes foreign economic policy.

On the domestic side, there is, as we have said, no single agency responsible for economic policy. Treasury has recently assumed a more general role than other operating departments, but this

Approved For Release 2003/02/27 : CIA-RDP86B00269R000600030001-1

Approved For Release 2003/02/27 : CIA-RDP86B00269R000600030001-1

has resulted in part from combinations of personalities, circumstances and resource availabilities which may not continue naturally. Nonetheless, because of its traditional concerns with international monetary affairs, taxation, and some specialized aspects of trade, Treasury is intimately concerned with the interface of domestic and international economics. Commerce also has broad concerns affecting foreign economic policy—trade, investment and tourism, for example—although it has been less successful than Treasury in expanding its influence. Agriculture has a more limited involvement, but an important one.

It is these departments—Treasury, Commerce and Agriculture—in close contact with domestic economic interests and the principal government decision-makers which must share with each other and with State responsibility for foreign economic policy. When they fail to reconcile positions, it will be by definition an issue worthy of Presidential decision.

Of course, these four are not the only voices to be heard—almost no important department or agency fails to touch upon issues of foreign economic policy. Their top men should have access to the President as well, when they deem critical points are at stake. Organizational mechanisms need to recognize that reality too.

There is need for a mechanism to address foreign economic policy in a sustained way and to facilitate the processes necessary to bring together the domestic economic and foreign policy considerations that must make up the analysis, debate, formulation and implementation of foreign economic policy. For this purpose, we recommend that:

The President should establish a joint subcouncil of the NSC and the Domestic Council and the Economic Policy Board (or whatever White House organizations should come to perform their functions). Members of this body, the Subcouncil on International Economic Policy, would be the Under Secretary of State for Economic Affairs, the Under Secretary of Treasury for Monetary Affairs, the Under Secretaries of Commerce and Agriculture and the Chairman of the Council of Economic Advisers. Other subcabinet officers and agency heads would attend Subcouncil meetings as full members with respect to questions impinging significantly on their responsibilities.

Designation of a Chairman should be left to the President. However, we anticipate that normally the Subcouncil would be chaired by the Under Secretary of State for Economic Affairs. The Assistant to the President for Economic Policy would serve as Executive Secretary of the Subcouncil and Director of its staff. The staff would be drawn in part from the staffs of its parent bodies but would function as the Assistant to the President's own staff.

The Subcouncil could create such committees or task forces as the President may deem necessary to assure adequate interagency attention to continuing issues of international economic policy and to special problems. The regular members of the Subcouncil normally would be represented on each such group, as would the staff of the Assistant to the President.

The CIEP should be abolished by Congress, and its staff should be used to strengthen the economic capability of the NSC and White House Domestic Council. Other interagency international economic policy bodies would be brought under the Subcouncil framework.

In recommending this arrangement, the Commission considered carefully the merits of building this link between foreign and domestic economic policy at the full Cabinet level, especially since we recognize that Cabinet members must give more attention to matters of foreign economic policy. However, because the broad responsibilities of Cabinet members will not always permit them to devote sustained attention to foreign economic policy, and because our research indicated that the bulk of foreign economic policy issues fall at the sub-Cabinet level, the organizational pattern recommended seems most appropriate and consistent with these major needs.

In expressing our preference for Subcouncil Chairman, we recognize that good arguments also exist for other choices, and have, therefore, left that decision to the President. Our preference for the Under Secretary of State as the most likely choice reflects a number of considerations. First, he is the most senior U.S. Government official concerned solely with foreign economic policy. Second, while State may not always be the lead agency in every foreign economic policy issue, it will be so in many, and it will be *one* of the principal actors in *all* foreign economic policy issues. Third, State—alone among Departments—has in the Foreign Service and its posts and missions, the capability to provide the bulk of the foreign inputs that feed the decision-making process and to carry out decisions reached, all on a sustained basis. Fourth, in the formulation, negotiation and implementation of policy, only State has the capacity to relate a particular policy or issue to all other aspects of our relationship with a foreign country.

The Commission considered the possible channels through which recommendations (or disagreements) of the Subcouncil might go to the President and concluded that even though it may seem untidy, the most practicable arrangement was to leave open various channels. Accordingly, issues might proceed up to the President through either parent council. Other issues could be taken directly by the Assistant to the President. But formal requests for a Presidential decision should proceed to the President through one of the parent bodies.

Approved For Release 2003/02/27 : CIA-RDP86B00269R000600030001-1

Approved For Release 2003/02/27 : CIA-RDP86B00269R000600030001-1

In order to facilitate the development of policy with a Presidential perspective in which the diverse strands are brought into a consistent and intelligible framework and rationale, and a more orderly and coherent examination of the issues by the Congress and the public, we recommend:

Maintaining the practice of submitting to Congress an annual Report of the President on International Economic Policy. This report should be prepared in conjunction with the State of the World Report recommended in Chapter 10 and should be submitted as part of that Report.

The President's Assistant for Economic Policy might assume coordinating responsibility for preparing this report.

STRENGTHENING THE DEPARTMENTS

In recent years most executive departments (especially Treasury and State) have strengthened their capacities in the area of foreign economic policy. We believe that this effort should be continued but with some important shifts of emphasis.

With respect to Treasury we do not favor, as has been suggested, efforts to split responsibilities of the most senior Treasury officials—at the Deputy and Under Secretary level—between domestic and international concerns. Certain of those officials—particularly the Under Secretary for Monetary Affairs—may increasingly find the balance of their work weighted toward the international side. But relieving them of their domestic responsibilities, or removing other officials of similar rank from responsibility for foreign problems, would be damaging to that understanding of intimate interactions between the two which we seek to reinforce.

In the case of the State Department, a number of needs exist. To better equip State to play a balancing role in foreign economic policy, and to assure its closer integration with the whole body of foreign policy, changes should be made to assure on a continuing basis a strong Under Secretary of State for Economic Affairs, experienced in dealing with business and economic problems and able to command adequate resources to support his activities.

In emphasizing the crucial nature of the Under Secretary's position, we do not intend to diminish the importance of having the Secretary himself play a greater role in foreign economic or scientific policy. In fact, we believe that events will leave him no alternative. On the other hand, we know that the Secretary will often find it impossible to devote large amounts of his time to these matters. Effective delegation to the proposed Under Secretary for Economic and Scientific Affairs will thus require an incumbent with enough stature in the Department and in the eyes of the President and other Cabinet officers, to permit him to act as the alter ego of the Secretary in this area.

The traditional preoccupation of the State Department with political matters has impeded the Department's effective participation not only in such main line foreign economic matters as trade, aid and investment, but also in the more novel but increasingly important questions of global environmental and resource interdependence.

Concerning such issues as world population, weather modification, ozone depletion, governance of ocean uses and resources, it is essential, we believe, to improve the Department's capacity to conform in particular U.S. positions to the larger purposes of American foreign policy. The reorganization of 1975, instituting a Bureau of Oceans and International Environmental and Scientific Affairs (OES), represented a step in the right direction. A remaining weakness in the current organization of the State Department, however, derives from the lack of integration between units dealing with global resource and environmental issues and those focusing on economic questions. Both the relatively low status of those bureaus and their separation from the Economic Bureau should be corrected.

We believe this can best be done by broadening the scope of the Under Secretary for Economic Affairs. We, therefore, recommend that:

The Under Secretary for Economic Affairs be retitled the Under Secretary for Economic and Scientific Affairs and that the Bureau of Economic and Business Affairs, and the Bureau of Oceans and International Environment and Scientific Affairs, together with the functional units of the Bureau of International Organization Affairs, be reordered as four new, closely related bureaus, each headed by an Assistant Secretary responsible to the Under Secretary, as follows:

(1) *International Economic and Business Affairs (principally trade, monetary, and investment policy);*

(2) *Energy, Transportation, and Communication Affairs;*

(3) *Oceans, Environmental, and Scientific Affairs;*

(4) *Food, Population, and Development Affairs.*

As the senior officer of the Department responsible for all of these matters below the Secretary, the new Under Secretary would have greater status, as well as closer links with experts and officials working in these areas. As discussed in Chapter 9, the Under Secretary also would play a major role in multilateral diplomacy, since many of the issues of concern to him will arise in multilateral contexts.

The effect of these recommendations would be to create a coherent economic-scientific-technological complex within the Department of

Approved For Release 2003/02/27 : CIA-RDP86B00269R000600030001-1

Approved For Release 2003/02/27 : CIA-RDP86B00269R000600030001-1

State. The Under Secretary and the bureaus concerned should be able not only to provide more assistance to the geographic Assistant Secretaries on economic, scientific, and interdependence matters, but to monitor much more effectively the activities of other parts of government whose concerns parallel their own.

In addition, we believe that certain changes in personnel policy will be required in the Department. Existing career incentives and organizational arrangements in State have discouraged promotion to the prestigious positions of officers with a background in economics, contributing to an insulation of foreign political and economic policy. This problem has been recognized before, and some changes instituted, but more must be done if State is to meet the challenge of a more effective international economic policy. We therefore recommend that:

Larger numbers of career Ambassadors and Deputy Chiefs of Mission should be appointed from among officers with economics training and background: senior officers at economically important consular posts should ordinarily be expected to have had economic and commercial exposure either in State or through assignment to another agency; the recruitment of professionally trained economists should be accelerated without requiring that they become part of the Foreign Service; and training programs in economics for Foreign Service Officers should be accelerated.

The Commission has not examined in depth the organizational problems concerning economic policy within other Departments, but wishes to express its conviction that, if those departments are to play a proper role in shaping and implementing international economic policy, they too will need increased emphasis on such policy in personnel selection and organization. Some recommendations follow for strengthening the capability of all government agencies to deal with foreign economic policy problems. It is the Commission's view that all domestic agencies concerned, as well as our national interests, would benefit from such strengthening.

PERSONNEL FOR INTERNATIONAL ECONOMIC POLICY

Central to our strategy for a more effective foreign economic policy is the open competition of divergent interests and perspectives. But that competition must take place within a context of genuine understanding of opposite perspectives and a commitment to serve the national interest. To help create the context to facilitate communication among Departments, and to encourage greater depth and professionalism among civil servants, we recommend that:

Systematic personnel interchange at the middle-grade levels among the Departments and agencies with principal responsibilities for foreign economic policy be expanded.

To assure the success of such a program, arrangements should be instituted by the Civil Service Commission and the Foreign Service, to designate a number of responsible positions in the key agencies involved in foreign economic policy as interchange positions. Such positions would then be filled by officials from other agencies on at least a two-year term. For such a program to succeed, meaningful incentives and sanctions would have to be imposed: for example, in the case of domestic agency employees, that career officials would not ordinarily be eligible for positions of senior responsibility in foreign economic policy unless they had served with the State Department or in an overseas post. In the case of State Department officials, a corresponding tour with a domestic economic agency would be required before eligibility for senior economic positions was permitted.

The Commission rejected a more extreme option of creating a separate "International Economics Service," administered by the Civil Service Commission or the Foreign Service, to provide a common pool of trained and experienced manpower to all executive departments and agencies involved in international economic policy. Such an arrangement would provide the strongest incentive to minimize narrow bureaucratic loyalties and to broaden the horizons of key officials. Despite those attractive aspects, the Commission felt that the proposal would too sharply insulate a specialized corps from the very concerns of domestic and foreign policy that we wish to integrate. Further, the top policymakers in each department might be deprived of the loyalty and continuity they will properly demand of their key subordinates.

POLICY IMPLEMENTATION AND OVERSEAS REPRESENTATION

Unlike foreign political policy, where States has virtually exclusive responsibility, the execution of foreign economic policy has been shared to a degree among the Departments of State, Treasury, Agriculture, Commerce, and others, depending upon the substance. We believe this is appropriate, both because of the degree of knowledge required in specialized areas and because of the value of direct exposure to foreign concerns for domestically oriented agencies. Moreover, as international economic problems have grown in importance and multilateral diplomacy has increasingly supplanted bilateral negotiations as the main channel of international decision-making, Washington-based officials have assumed a larger role in economic negotiations relative to Embassy personnel. These trends have suggested to some that the time has come when we might appropriately transfer from

Approved For Release 2003/02/27 : CIA-RDP86B00269R000600030001-1

Approved For Release 2003/02/27 : CIA-RDP86B00269R000600030001-1

State and the Foreign Service the bulk of its responsibilities for economic negotiations and reporting. As is implied by our earlier recommendations, we reject this line of reasoning. But, equally, an attempt to centralize all responsibility for these matters, removing them from economic departments to State, appears impractical and counterproductive in terms of our basic objectives.

As a consequence, the Commission supports flexibility in the use of multiagency participation in policy negotiations and implementation abroad. The State Department must retain overall coordinating responsibility; no international negotiations should proceed without its knowledge and approval. It should normally participate in the manning of international delegations, but need not automatically chair these, depending upon the substantive area. Overseas representation of domestic economic departments should continue in selected areas (e.g., agriculture and finance) so long as their representatives are under the control of the Ambassador.

The proper balance between Treasury and State Department representatives overseas presents some problems; their functions overlap, yet their loyalties and conceptions will necessarily be somewhat different. Still, if the desired balance is to be achieved as we propose, we feel that direct and senior representation by Treasury staff overseas, under the overall guidance and control of the Ambassador, will remain important despite the organizational untidiness. Ultimate control by the Ambassador is essential. It is as important that we speak with one voice in our relations with other governments as it is in the executive branch's relations with the Congress and the public at home.

RESEARCH, ANALYSIS AND INTELLIGENCE

The need for effective research, analysis, and intelligence in the foreign economic field can hardly be overemphasized. The impression of the Commission is that this function, which presently involves modest costs, can usefully be intensified in virtually all concerned Departments.

We are aware that research and analysis tend to take on the preoccupation and orientation of originating agencies, and there will be no certain and unambiguous answers to economic questions. But supporting research capacities in the relevant agencies is a necessary corollary of the basic theme of competition in policy formulation. Neither the President nor other policymakers should be [illegible] of research. Moreover, the President will be able to draw upon the CEA directed research group recommended earlier.

Considerable effort has developed in recent years to facilitate communication between the intelligence community and the makers of international economic policy, paralleled by some reorientation of the intelligence community toward economic matters. We welcome these efforts and feel that the CIA, among others, should continue to improve its capacity for international economic research and analysis.

RELATIONS WITH BUSINESS, AND THE COMMERCIAL FUNCTION ABROAD

We have noted that successful foreign economic policy will be dependent in part on more active communication between the government and the private sector. In considering how to accomplish this, we recognize that the links between the public and private sectors will need to conform to established traditions, attitudes and laws establishing the broader context of government-business relations in American society. Intimacy in policymaking is discouraged by these traditions in contrast to the practices of some foreign countries. Those traditions are fully consistent, however, with better communication.

As one approach toward improving communications with the interested public, we have recommended establishment of an International Economic Policy Advisory Board. We also recommend that:

The present personnel interchange program between government and business should be expanded substantially. The Commission believes this program should be concentrated at the middle and junior, rather than at senior levels.

The Commission considered transferring from the State Department to Commerce responsibility for overseas commercial assistance to business, but we rejected this proposal, in part because we believe it would further compartmentalize functions, in part because we were impressed by recent efforts of both State and Commerce to accent this function and to strengthen their cooperation.

SPECIAL PROBLEM AREAS

Foreign Assistance Programs. The Commission considered the possible advantages of separating the major assistance programs administered by the Agency for International Development (AID)—security or supporting assistance, development assistance and disaster relief [illegible] organizational units. In doing so, we recognized that AID has come under increasing criticism from public and professional groups, and that the reception it has received.

Approved For Release 2003/02/27 : CIA-RDP86B00269R000600030001-1

Approved For Release 2003/02/27 : CIA-RDP86B00269R000600030001-1

We concluded that foreign assistance programs, while they differ in specific orientation, are inevitably overlapping instruments of foreign policy. The programs share the use of taxpayer's money in support of diverse foreign policy objectives, and almost certainly will continue to do so. We do not think that their management or operation will be made less difficult by breaking apart the agency. On the contrary, there are advantages in treating these programs in a common administrative framework.

That AID has survived for 15 years in essentially its original form despite constant criticism is a fact of some significance. The Agency has served as a relatively flexible, multi-purpose resource for the support of foreign policy, subordinate to the State Department with respect to general policy direction but charged with operating responsibilities that the State Department itself is not equipped to provide. It can accommodate frequent changes in program emphasis, an important advantage. The evolution of new kinds of assistance programs, or greatly expanded programs might suggest other organizational arrangements, but in the absence of such initiatives the present organization has much to be said for it.

The Commission, therefore, recommends that the Agency for International Development (AID) remain the State Department's operating arm for the implementation of bilateral foreign assistance.

The Commission did not concern itself with the proper roles and relative funding of bilateral and multilateral programs. We assume both will continue. We did consider whether coordination between these two forms of assistance would be more assuredly achieved if State/AID assumed the lead role in supervising U.S. participation in the multilateral development banks (as is already the case with respect to the United Nations Development Program), rather than leaving that responsibility with the Treasury Department.

We resist this change. The flows of capital through the development banks are a logical concern of the Treasury Department both as they impinge upon U.S. capital markets and as they affect the climate of international financial affairs. We are conscious that the Congressional interest in these institutions has emphasized the need for a banking or financial orientation in their management, and for a distinction between these programs and bilateral assistance. Finally, there is much to be said for separating the long-term U.S. interest in the development missions of these banks from the shorter term and more specific political and security interests which our bilateral assistance program must perforce reflect.

Accordingly, we endorse the continuation of primary Treasury Department responsibility for supervision of U.S. commitments to the international development institutions. Treasury should coordinate with the State Department concerning directives given U.S. representatives on the executive boards when political issues arise in connection with the policies and operations of these institutions.

The Flow of International Investment. Issues of international investment have received greater prominence as a result of the growth of international corporations, many of which are based in the United States. More recently, the actual and potential flows of larger amounts of foreign investment into the United States, particularly from oil-rich nations, have raised new opportunities as well as new questions. These issues have led some nations to set up organizations to deal specifically with direct investment or with that form of enterprise popularly known as the multinational corporation.

We recognize that a wide range of substantive issues is raised by international investment and by international corporations, including tax, monetary, anti-trust and expropriation questions. We welcome the recent establishment of the Interagency Committee on Foreign Investment to screen investment funds coming into the U.S., as well as the increased efforts being given by the Commerce Department to collecting and analyzing information about foreign direct investment in the United States.

This is only part, and probably the smaller part, of of the national concern with the flow of investment funds. We need huge amounts of capital to meet energy, environmental and economic growth needs. With so much of the world's capital formation taking place in the oil rich nations and the Eurodollar market, a good part of the capital needed in the U.S. should come from abroad. Also, our need for raw materials, our interest in the development of the poor countries and the world's food needs make the application of our technology and a flow of capital from the U.S. to other countries essential to a satisfactory international economic order. To achieve a satisfactory inward and outward investment flow, it will be necessary to make investment attractive and secure both here and abroad. This is primarily a matter of tax and financial policy here and in other countries and of international understandings on expropriation and other barriers to investment.

We do not have and believe it is necessary or desirable to establish within the United States Government a new agency, or Special Representative, to control either international corporations or the flow of

Approved For Release 2003/02/27 : CIA-RDP86B00269R000600030001-1

Approved For Release 2003/02/27 : CIA-RDP86B00269R000600030001-1

In resisting such proposals, we are influenced by two considerations:

(1) In concept, the activities of multinational corporations necessarily cut across a number of aspects of international economic policy, but those policy issues will need to be considered on their merits as they apply to all businesses with some international exposure—not just to some indefinable group labeled multinational. The designation of a special organizational entity to deal with multinational companies on the one hand, or to screen foreign investment in the United States on the other, would imply a decision to treat these matters in a new and special manner—a decision that is not justified at present.

(2) In practice, dealings with other nations on the problems of international corporations and international investment do not reveal a clear need for new and separate organizational arrangements. What are needed are the sustained attention and cooperative efforts of existing bureaus and agencies, especially in State, Commerce, Treasury and the Export-Import Bank in this area. Both for general policy problems and for more specific concerns, these flexible arrangements are effective and adequate. This issue should be a major item on the agenda of the Subcouncil on International Economic Policy.

There are, however, *two exceptions* to our conclusion that no broad organizational changes are necessary.

The *energy* industry is one special case. Rapid changes are underway in the nature of the international energy business, with ownership of production passing rapidly into the hands of foreign governments. Petroleum has enormous importance to the economy and security of the United States, and we have become substantially more dependent on foreign sources. Sensible energy policy necessarily involves simultaneous consideration of domestic and international considerations. In fact, energy policy is, perhaps, the outstanding example of how domestic and foreign policies intertwine. Oil embargos and the cartelization of oil prices generate concern for our national security, deterioration in our trade balance and the value of the dollar, and differences among allies, as well as lines at gas stations, unemployment and higher prices at home. To meet these multiple threats will take a combination of domestic policies which will conserve fuel and bring in new oil and gas and develop alternative sources of energy, and foreign policies which will result in the application of our superior oil-finding and nuclear technology around the world in order to increase the supply of oil and reduce demand for it. It also will be necessary to develop understandings among nations which will assure access to supplies, mitigate distortions in financial flows, and provide for joint efforts at conservation, oil reserves, the pooling of supplies to blunt the impact of any embargo, and so on. Some progress has been made, but not nearly enough. This is primarily a matter of deciding on appropriate policies and implementing them. This is, above all, an area where cooperation between Congress and the Executive Branch is critical.

An improved organizational focus also can help resolve these problems constructively. We recommend therefore that:

The Federal Energy Administration should provide the focus and leadership for carrying out the national energy policy. The State Department will have a crucial continuing role in bringing to bear on all aspects of the policy process the critical considerations of security and diplomacy, and in coordinating and implementing the foreign policy aspects of our energy policy.

The second area in which a better organizational focus appears necessary includes trade, investment, credits and technology transfers with Communist countries. Economic contacts with nations having a centrally planned economy differ qualitatively from those where market forces predominate. Relatively close government surveillance and regulation of the process appears inevitable and necessary. Especially is this so where national security considerations arise out of the export of high-technology products. But in no other area has the Commission heard more criticism of the fragmentation of authority within the executive branch, and apparent inability to receive necessary guidance. We believe improvement here is important.

The Commission proposes that the Office of Export Administration in the Commerce Department be designated a central point of contact between the private sector and the government for the licensing and surveillance of trade and investment with Communist countries. Policy guidance for that office should be centralized in the Board of East-West Foreign Trade authorized by the Trade Act of 1974, and consisting of Cabinet-level officials from each of the departments involved in export regulation. The Board should be backed up by a working group of officials from the same agencies.

This Board, now being organized, shall reevaluate existing policies and devise a new, more efficient, and more consistent system of export control management. It shall review proposed transactions with Communist countries in light of economic criteria as well as their potential effects on national security. We believe the broad range of agencies represented on the Board, and its directive to "coordinate the policies and operations of all agencies of the United States which regulate or participate in trade with nonmarket economy countries" will help it [illegible] traditionally taken toward export control. Strong State Department participation shall also seek that objective.

Approved For Release 2003/02/27 : CIA-RDP86B00269R000600030001-1

Approved For Release 2003/02/27 : CIA-RDP86B00269R000600030001-1

By itself, however, such a board will not be enough. Also necessary is a working-level staff with wide expertise on all relevant considerations, including a balance between business development interests and those of national security. This staff should be drawn in part from the Office of the Secretary of Defense, the Joint Chiefs of Staff, the CIA's Office of Strategic Research, and the Arms Control and Disarmament Agency—organizations knowledgable about the crucial link between technological capabilities and the enhancement of important military capabilities. In addition, trade specialists and other experts on Soviet political and economic affairs should be drawn from the Departments of State, Commerce, and Treasury, as well as from other government agencies, in order to integrate more fully these considerations with military ones.

Representatives of the academic and business communities should be formed into technical advisory committees to assist the Board in gauging existing foreign availability of proposed U.S. exports, monitoring new technological developments and establishing procedures for evaluating the success or failure to export control process itself.

Close Congressional contact with the proposed Board of East-West Trade should be maintained to insure the reflection of Congressional views, and help insure Congressional approval of those arrangements which may require legislative action or approval.

Trade and the Special Trade Representative. The Office of the Special Trade Representative grew out of particular legislative concerns prior to the Kennedy Round of trade negotiations in the 1960's. It has successfully provided a focus for consideration and negotiation of questions of trade policy cutting across the jurisdiction of a number of agencies, particularly at times of complex multilateral negotiations. We see no reason to disturb a reasonably successful modus vivendi, particularly in the midst of ongoing negotiations. However, this Office will presumably be less active following the termination of the present multilateral trade negotiations some years hence.

We propose that, after the current negotiations are concluded, the ongoing tasks of administration, negotiation and coordination be accomplished by a transfer of the Office, under a Special Ambassador, to the Department of State.

CHAPTER 6

DEFENSE POLICY

THE NATURE OF THE PROBLEM

Elsewhere in this report we have noted the changing contents of the foreign policy agenda, the growing importance of economic issues and of problems of global interdependence. Those trends are deep-seated and continuing, but they do not diminish the importance of a powerful defense establishment. For as many years ahead as we can foresee, the U.S. will require military capabilities unquestionably sufficient—in size, equipment, and readiness—to assure the security of the U.S. and its allies against military aggression.

That being so, the U.S. will continue to face the difficult problems associated with the maintenance of varied and powerful military forces and the large defense establishment on which they depend. Three requirements in particular concern us.

Most importantly, as the defense establishment halts its primary requirement to safeguard national security, it should be an effective instrument of U.S. foreign policy. The needs of the armed services themselves, and the difficulty of the missions assigned them, will to some extent affect foreign policy—especially through base rights and overseas deployment requirements. Yet the services must be the servants of governmental policy.

Second, the services must be effective. They must be ready and able to successfully execute the extraordinarily various and difficult tasks which at any moment may be assigned them.

Third, the needed capabilities must be acquired and maintained as economically as possible. Defense is inevitably expensive, but the Department of Defense, the President, and the Congress have an obligation to hold those expenses to the minimum required.

To more effectively pursue these objectives, we offer a number of recommendations. They concern first the interagency policy consideration at the White House level, and then the organization and the relations among the various executive departments concerned with national security.

THE NSC AND ITS COMMITTEES

The Commission believes that some restructuring of the NSC Committes concerned with defense issues would be helpful.

Approved For Release 2003/02/27 : CIA-RDP86B00269R000600030001-1

Approved For Release 2003/02/27 : CIA-RDP86B00269R000600030001-1

The Verification Panel, charged with the analysis of arms control issues, requires least change; it and its subgroups have worked relatively well. We believe that effective arms control can be a crucial contribution to the security of the U.S. and of all nations, and we therefore expect the Panel to continue to play a major role. The Panel should continue to be chaired by the President's Assistant for National Security Affairs, with the Arms Control and Disarmament Agency (ACDA), the Central Intelligence Agency (CIA), the Departments of State and Defense, and the Joint Chiefs of Staff (JCS) represented at the appropriate level. The formal inputs of each agency should be sought vigorously and on a regular basis. Findings of the Verification Panel should regularly be presented to the principals of the National Security Council. This sequence has not always been followed, but it has great merit and ensures that the President will oversee this process, one of the most profoundly important that he must address.

Arms Transfers and Security Assistance Committee. The Commission recommends:

Broadening the current Security Assistance Program Review Committee (SAPRC) into a standing committee of the NSC to serve as the primary forum for interagency review of all issues involving arms transfers and security assistance.

This review process would be headed by the proposed Under Secretary of State for Political and Security Affairs and include representatives of the Office of Management and Budget (OMB), ACDA, State, Defense, JCS, Treasury and the NSC staff. State should be vested with the primary responsibility for determining the role of security assistance and arms transfers in our bilateral relations.

This is a broadening of the original SAPRC concept, and would bring into better focus and better management several areas of critical importance. One of these, security assistance, is declining in size, but arms transfers are growing rapidly and have important policy implications. It is essential that U.S. transfers of military equipment to other nations are carefully assessed, prior to the making of commitments, in the light of their many political implications. We believe the Department of State must take the lead responsibility for such assessment, and that the proposed committee structure, effectively utilized, would prove a useful step toward that end.

The Washington Special Action Group. WSAG's purpose is to deal with rapidly breaking crises. It has been used effectively. We endorse the continued location of this group in the White House, chaired by the President's National Security Adviser. We believe that, between crises, a brief but systematic review of U.S. actions and crisis management procedures would frequently be valuable. We propose, therefore, that:

After a WSAG-level crisis, a crisis review group should assess the government's performance and, where appropriate, review and reconsider contingency plans.

This activity need not engage WSAG members, but should be undertaken under WSAG supervision.

A National Security Review Committee. Each of the interagency groups and committees discussed above, together with the Senior Review Group discussed in Chapter 3, can contribute to the better linking of some aspects of U.S. military and political activity. None of them, however, can assure the larger integration of defense policy, programs and budgets with the objectives and requirements of U.S. foreign policy. That task was intended to be the special responsibility of the NSC's Defense Program Review Committee (DPRC). Charged with an extraordinarily difficult assignment made even harder by the resistance of the DoD to the exercise of that responsibility at any level short of the President, the DPRC has fallen into disuse. The result has been that the recent record of our government in reviewing the totality of its defense activity in the light of the nation's overseas policy and security requirements has been—in the words of Secretary Kissinger's testimony before this Commission—"not distinguished."

The Commission believes that record can and must be improved. The personal commitment of the President to this task is essential; it cannot be carried out without his active support. But we believe that a mechanism and a process suitable to the task must also be established. We therefore recommend:

Establishment of a National Security Review Committee (NSRC) to conduct a broad review, under the direction of the National Security Council principals, of the U.S. worldwide national security posture at the beginning of every new Administration. The review should involve the newly appointed senior officials and draw upon the views of the relevant departments. It should be directed by the President and his National Security Assistant.

Participants should include State, CIA, Defense, Treasury, OMB, JCS, ACDA, the President's Science Adviser, the Chairman of the National Defense Advisory Board proposed below, and others as appropriate. The review should identify the major contingencies U.S. forces should be prepared to meet, lay down broad fiscal and structural guidelines for the development of U.S. national security policy, and identify major issues for future analysis.

The concepts that emerge from such a review will be fundamental to the nation's major [illegible] of the United States. They will become statements of the U.S. Government's understanding of its national security interests. As such, they should be broadly understood

Approved For Release 2003/02/27 : CIA-RDP86B00269R000600030001-1

Approved For Release 2003/02/27 : CIA-RDP86B00269R000600030001-1

and broadly articulated. While a few of the conclusions of this review may necessarily remain classified, most of them should be broadly shared within the entire executive branch, with the Congress, and with the American people. They should therefore be fully reflected in the President's "State of the World Report" which in Chapter 10 we propose be reinstituted.

Following initial Presidential decisions on force levels, and issuance of Presidentially approved fiscal guidelines, the NSRC should conduct two forms of annual review and updating. The first should be a policy review, designed to revise and update, as necessary, policy decisions made in the initial study. It should be chaired by the President's National Security Adviser. The second should be a review of progress in implementing the initial Presidential decisions. It should take place under the direction of the Deputy Secretary of Defense, and include representatives of the other agencies.

An Advisory Board on National Defense. Our final recommendation at the Presidential level seeks to open better channels of communication and advice between national security authorities and the public. National security has taken on new dimensions. Access to essential materials, alertness to technological potentials, and public understanding of the need to maintain readiness against distant but lethal threats are today critical to national security. Much of the perspective and experience relevant to these more intangible aspects of national security is found primarily in the private sector. To facilitate their input into governmental decision-making, and to better communicate defense needs to the public and channel back the convictions and reactions of the American people, we recommend that:

The President establish an Advisory Board on National Defense, composed of private citizens who are well equipped by training and experience to bring to bear on defense questions the views of American society, and to facilitate the communication of defense needs to the public. The Board should be provided with a small independent staff.

Similar advisory boards have been useful in other areas (e.g., intelligence) and we recommend their establishment in two other chapters of this report. The Commission believes that our defense establishment also would benefit from this direct exposure to thinking outside official channels as well as from the ability to generate broader public understanding and support of policy positions.

Taken together, these alterations in the structure and processes of national security decision-making at the White House level can substantially improve our government's ability to make its huge and essential investments in defense better meet the three difficult tests of responsiveness to policy, effectiveness, and economy.

Approved For Release 2003/02/27 : CIA-RDP86B00269R000600030001-1

THE STATE-DEFENSE RELATIONSHIP

The position of the President and the effectiveness of the NSC structure are crucial to the better integration of the policies and programs of the Department of Defense into the amalgam of military, political and economic purposes which should determine the nation's foreign policy. But while White House actions are essential, they are not sufficient. Both the effective making of high policy and the successful linkage of military to other foreign policy purposes in the daily flow of governmental actions require the strong participation of the central cabinet department in foreign affairs, the Department of State.

We believe that the President must require such participation from the Department, and that the Secretary of State must direct it. But we also believe that when those conditions are met, the Department will be found inadequately organized and staffed to meet its political-military responsibilities. Part of the problem stems from the training and orientation of the Foreign Service, few members of which are professionally qualified to deal confidently with political-military issues. Attitudes toward management, quantitative analysis, budget processes and toward military expertise all contribute to the problem. State's organizational arrangements are also inadequate, however. We discuss these first.

The Office of Politico-Military Affairs. The State Department's movement into the arena of national security policy has been slow and uneven. Only in 1961 did State first establish an office dealing specifically with political-military affairs (now called PM), and not until 1970 was the head of that office given a rank equivalent to that of an Assistant Secretary of State. The job is not Senate-confirmed, however, and the rank equivalence is only by executive fiat.

Even today some in State argue that PM ought not to exist, or at most should serve only as a small personal staff to the Under Secretary of State, as it did originally. This argument proceeds from the belief that principal responsibility ought to reside in the regional bureaus in State, a position with which we are in full agreement. To extend this argument to make political-military affairs the responsibility only of officials within the regional bureaus would badly weaken the Department in its dealings with the Pentagon. The overriding requirement, we believe, is that State be able to assist the White House and face the Pentagon from a much stronger position.

PM stands at the proper position for such upgrading; its growth is healthy for both State and Defense. It has begun to acquire some outstanding personnel, including highly capable officers from outside [illegible] much more needs to be done.

The political-military point of view needs a strong and steadily focused position at the top of the State Department. In theory, it

Approved For Release 2003/02/27 : CIA-RDP86B00269R000600030001-1

already has one, with the Department containing both an Under Secretary for Political Affairs and an Under Secretary for Security Assistance. But in practice, matters are otherwise. The former position has at some times been strongly oriented towards political-military issues. At other times, as at present, it has not. The problem is that the Political Affairs job does not carry an explicitly-stated political-military responsibility. Each incumbent is free to define the job as he and his Secretary wish. At the same time, the Under Secretary for Security Assistance, ranking fifth in the Department, is responsible for only one portion of the work of one Bureau located far below him. This results from the understandable desire of Congress for some official whom it could hold responsible for the billion dollar security assistance program, but the end result makes little sense and should be reconsidered.

The problems then, are essentially two:

There is no high level focal point below the Secretary to coordinate State's role in the national security area and its relations with other agencies in the community. Currently, the Secretary performs this role personally on the handful of issues in which he can take a continuing interest. The prospect for departmental and interagency leadership on national security issues from the Director of PM, even if he were formally elevated to Assistant Secretary, must be considered remote.

Current recruitment and training patterns in the Foreign Service do not routinely produce competent analysts of national security policy issues. Moreover, restrictions on lateral entry inhibit their recruitment from outside. The current Foreign Service "career cones" concept is, if anything, more limiting in this respect than previous personnel policies. For example, training in budget and planning skills is concentrated in the administrative cone, and economic analytic techniques are taught in the economic cone; both types of skills are useful for national security analysts. Consequently many of the Department's analysts on national security issues must come initially from outside the Foreign Service, but many barriers inhibit such recruiting.

To deal with these problems, the Commission makes four recommendations.

A single senior State official should be clearly identified as responsible, under the Secretary, for political-military and national security affairs. To accomplish this the position of Under Secretary of State for Political Affairs should be retitled Under Secretary for Political and Security Affairs, and m[illegible] Bureau of Politico Military Affairs. The position of Under Secretary of State for Security Assistance should be abolished.

Approved For Release 2003/02/27 : CIA-RDP86B00269R000600030001-1

The Under Secretary for Political and Security Affairs would become State's principal representative in the defense community, managing the Department's activities and positions concerning security assistance, arms control, overseas deployments and bases, nuclear issues, certain intelligence oversight functions, and all other political-military affairs. He would have line authority over the PM bureau, and PM's director would act as his principal deputy.

The selection and training of Foreign Service officers should recognize the need for competent and national security analysts in both Washington and abroad.

This requires greater emphasis on quantitative aptitude, development of analytical skills and experience in political-military matters. It could be accomplished either by designating a new career cone subspeciality (political-military affairs) or by training a percentage of FSO's on an individual basis.

Barriers and administrative inhibitions to the hiring of political-military specialists or to their lateral entry into Foreign Service ranks should be sharply reduced.

This is an essential requirement at least until the Foreign Service can develop its own political-military competence. Even then, however, temporary employment of outside specialists on term contracts should be encouraged.

The political-military capability of the regional bureaus in State should be upgraded.

The proposed upgrading of State's role in the national security community is not intended to result in the ascendence of PM over the regional bureaus. The regional bureaus must themselves take a stronger role in political-military planning. Indeed, our proposed interagency structure would require their active participation in the review of bilateral and regional security issues. We suggest either the establishment of strong regional political-military teams (as now exist in the European Bureau), or the assignment of officers with political-military experience to desks of individual countries where the U.S. national security establishment has particularly substantial interests.

THE ARMS CONTROL AND DISARMAMENT AGENCY

Arms control will continue to be an important element in U.S. national security policy in the years ahead. Not only will the strategic arms limitation talks (SALT) continue to be a major element in our relations with the Soviet Union, but a growing range of related issues

Approved For Release 2003/02/27 : CIA-RDP86B00269R000600030001-1

will require expanded activity and expertise. These include nuclear proliferation, mutual and balanced force reductions in Central Europe, a threshold nuclear test ban, peaceful nuclear explosions, chemical weapons, the use of environment modification techniques in warfare, and better control of the world arms trade.

Effective arms control can improve national security. To insure that it does so will take action in several arenas, all under the guidance of the President. One important resource for such action is the Arms Control and Disarmament Agency.

ACDA's creation in 1961 marked a conscious decision to emphasize and institutionalize arms control as a component of U.S. national security policy. Though administratively related to the State Department, ACDA is an independent agency and its Director is charged with serving the President and Secretary of State as their principal advisor on arms control matters. ACDA's role was defined in its enabling legislation to include: the conduct, support and coordination of research for arms control policy formulation; the preparation, operation and direction of control systems which become part of U.S. arms control and disarmament activities.

ACDA has played a useful role. We believe, however, that the agency should be further strengthened and upgraded in a number of respects. These include:

Innovation in Research in Arms Control. ACDA's research structure should emphasize both servicing on-going negotiations and long-term planning. The recent establishment under the Agency's Counselor of a Policy and Planning staff to undertake long-term planning studies was a desirable development. We believe both types of research are fundamental and can be further strengthened. Accordingly, we recommend that:

ACDA's external research program should be expanded, focusing on longer term problems and possibilities for arms control.

This work should address such issues as conventional arms control; regional limits on arms purchases and force levels; and the impact of future technologies on existing agreements.

Assessment of U.S. Developments. The basic responsibility for U.S. weapons development and acquisition policy lies with the Department of Defense and the new Energy Research and Development Administration. But it is important that ACDA have a systematic opportunity to review defense plans for their arms control implications. We have therefore earlier proposed that:

The Director of ACDA should become a member of the proposed National Security Review Committee (NSRC).

Through the NSRC, the Director of ACDA should advise the Secretaries of State and Defense and the President of any arms control implications in the planned defense program.

Assessing the Impact of Military Assistance and Arms Transfers. The agency has not in the past played a fully satisfactory role in the review of U.S. arms sales and assistance. Yet, arms control considerations and the impact of security assistance on local and regional balances should be central considerations in U.S. security assistance policy. ACDA should therefore contribute importantly to the making of that policy. Accordingly, we propose that:

The Director of ACDA should become a member of the proposed NSC Arms Transfer and Security Assistance Committee, and should enlarge ACDA's capability to assess the arms control implications of U.S. security assistance policy and arms sales.

Public Education on Arms Control. Public understanding of arms control issues is extremely limited, partly as a result of ACDA's restraint in providing information and stimulating debate. ACDA must not become a sponsor of propaganda, but within that constraint should be enabled to contribute fully to public education on arms control issues. We propose that:

ACDA should provide public information on arms control and disarmament matters, much as State is charged with explaining U.S. foreign policy.

ACDA should enlarge its program of publications, and develop a more active program of liaison with universities and research centers, stimulating studies and course developments relevant to arms control. If statutory change is required to permit such activities, it should be sought.

In order to facilitate these strengthened roles of ACDA, we propose that the Director of ACDA be established as principal adviser to the NSC on arms control and disarmament matters.

We believe such changes can strengthen ACDA's ability to carry out its responsibilities. Implementation may require an increase in personnel and budget, but we note that ACDA's budget has never significantly exceeded the $10 million originally appropriated in fiscal 1964. A substantial increase in ACDA's small budget over the next few years would be a small price to pay for its potential returns to the national security.

Approved For Release 2003/02/27 : CIA-RDP86B00269R000600030001-1

Approved For Release 2003/02/27 : CIA-RDP86B00269R000600030001-1

ROLE OF THE OFFICE OF MANAGEMENT AND BUDGET

The President's budget is a comprehensive statement of his program in dollar terms. It reflects his priorities and policy emphasis across all Federal programs. At the same time, the budgetary process provides a decision-forcing mechanism and a framework for budget allocations within overall fiscal policy.

The level and composition of the defense budget results from a complicated interaction of many pressures and participants. It reflects changing estimates of external threats; of foreign policy objectives; of assessments of risk, technological developments, fiscal policy, congressional and public attitudes. Thus an effective budget process must provide for a careful balancing of many interests.

Several background points about the budget process should be made before we address the role of OMB:

1. The President has direct constitutional responsibilities as Commander in Chief of the Armed Forces and the Chief official responsible for the conduct of foreign relations. He must therefore be directly involved in decisions on the defense budget.

2. The Secretary of Defense is second in the chain of military authority. The President must rely heavily and personally on the Secretary in making the balancing judgments and exercising civil control.

3. The Congress takes a special interest in defense matters, reflecting its constitutional responsibilities for raising armed forces and declaring war, the importance it attaches to the Nation's security, and the political significance of the $100 billion defense budget. The relevant Committees of the two Houses have great knowledge of military matters.

OMB's budget review is focused on determining the defense outlay total. This is, of course, a significant percentage of the Federal total, though it has been falling steadily, from 56% in 1956 to 41% in 1966, to 27% in fiscal 1976. To arrive at this total, OMB reviews all defense programs, focusing most heavily on those it considers to be of marginal effectiveness. The OMB effort builds upon and is integrated with a defense planning, programming, and budgeting process developed over the last 15 years. Although still evolving, the defense Planning, Programming and Budgeting system has done a great deal to tie long-range military planning to 5-year program costing, and to annual budgeting of Total Obligational Authority (TOA) and outlays.

What changes in OMB organization or procedure might strengthen the President's capability to deal with the major policy issues of the defense budget and to make effective trade-offs among defense and non-defense programs? We believe several would [illegible]

OMB analysts are currently organized solely along program and budget category lines, an arrangement effective for some purposes but inhibiting the broad policy perspective OMB might most usefully apply. We therefore propose that:

A new analysis capability should be created to support the Associate Director for National Security and International Programs, and to provide sustained attention to broad defense policy and program issues in OMB and in the proposed NSRC.

There should also be available to the President the results of continuing analyses of large-scale resource allocation questions, including defense versus civil program trade-offs. Since OMB is the only agency capable of marginal program analysis across the Government, improvement efforts should probably best be focused here. The Commission recommends that:

The OMB should take the lead in organizing a continuing interagency program of overall resource-allocation analyses, specifically including the trade-offs of defense against civil programs.

The staffs of the NSC, the Domestic Council and a few of the large domestic agencies like HEW should be involved in these efforts. They should be completed early in the year so that the results can be taken into account during the discussions between the OMB Director and the President in late June. The analysis should then be updated prior to the President's final decisions on the budget in December.

Such an effort would undoubtedly require some restructuring of OMB's staff resources to support top officials. Moreover, new techniques of arraying data and performing trade-off analysis would have to be developed. But the Commission believes that the improvement in the executive's ability to manage basic budget allocation issues can be significant.

At present, the main fiscal constraint reflected in the defense programming cycle is that provided by the Secretary to his own department in March. Fiscal guidance from the Budget Director often arrives much later, thus losing an important early opportunity to reconcile defense programs and fiscal policy. We believe that stronger participation by OMB in the early stages of the defense programming process, and involvement by the President in mid-year are required. We suggest that:

A more determined effort should be made by OMB and the White House to inject Presidentially-approved fiscal guidance into the defense programming cycle at budget preview time (mid-June to mid-July), and to come to grips with the major defense program issues [illegible] OMB participation with OSD in the Joint Budget Review should be extended to the Program Review in May-August.

Approved For Release 2003/02/27 : CIA-RDP86B00269R000600030001-1

Approved For Release 2003/02/27 : CIA-RDP86B00269R000600030001-1

It is in the May-June program review that the Secretary of Defense makes the critical program decisions which affect the total and mix of defense activities. Thus, this extension of the joint review process would make more effective the reconciliation of Defense totals with overall fiscal policy and with the trade-off analyses discussed above.

The President's fiscal policy guidance to DOD should be provided in both TOA and outlay terms.

Up to now, OMB has focused almost exclusively on the budget year outlay implications of the defense program, and has tended to accept defense views on TOA levels. But TOA levels have profound impact on future-year outlays, so that in effect future Presidential fiscal control and options are steadily being mortgaged. The process would be more effective from both defense and Presidential viewpoints if fiscal guidelines each year were provided in both TOA and outlay terms.

There should be continuing contact and support throughout the year between staff of the NSC, the State Department and OMB in defining issues, conducting special studies, and seeing that the results of such studies are reflected in the defense budget process.

One such study might address the appropriateness of continuing to include the costs of the military retirement system in the Defense budget. The Commission believes that such inclusion distorts the size of the Defense budget in comparison with those of other agencies.

The Budget Director and his staff should participate in the relevant NSC processes, and NSC staff should take part correspondingly in key points of the budget process, including the OMB Director's Review.

THE ROLE OF THE DEPARTMENT OF DEFENSE

The Department of Defense is, of course, the main operating agency of the government in the field of national security. It is the Defense Department that buys the weapons, trains the troops and maintains the bases from which U.S. military capability flows. In this capacity, DoD now spends close to $100 billion per year and employs four million military, civilian and paid reserve personnel. It maintains an extensive network of forward bases and deploys 25% of its active duty military personnel and nearly half of U.S. nuclear weapons in overseas locations. Even apart from their military capability, the maintenance of such large U.S. forces abroad is a significant factor in U.S. foreign policy.

The main instrument for assuring that [illegible] the President's overall policy objectives is the civilian leadership he appoints. In particular, it is the Secretary's responsibility to direct and control the Defense Department in identifying and planning for the contingencies in which U.S. military forces may be employed; sizing and shaping military forces accordingly, and overseeing overseas basing and deployments, and security assistance programs. In time of war the Secretary serves as the President's second in command in giving direction to the U.S. armed forces.

The Role of OSD. The principal instruments and advisors to the Secretary are the staff elements that make up the Office of the Secretary of Defense. These staffs support the Secretary and help shape departmental policies on everything from contracting and procurement guidelines to the environmental impact of defense programs and military health care.

Of particular interest is the role of the Office of International Security Affairs (ISA), charged with advising the Secretary on how defense activities affect broader U.S. foreign policy objectives. The office was established shortly after the Department itself was created in 1947, and over the years has been an important member of the foreign policy community. The ISA office is, in a sense, the opposite number of State's office of Political-Military Affairs (PM).

That ISA has often been called "the little State Department" is testimony to both the office's strength and its weakness. In one sense ISA is an informed and knowledgeable representative of the diplomatic community within the Pentagon. Indeed, a substantial fraction of ISA's staff officers over the years have been drawn from the Foreign Service. At the same time, ISA shares with State the traditional diplomats' weakness in quantitative and technical analysis. In recent years, analytic techniques have been one of the Defense Secretary's main tools in evaluating and shaping the defense program and budget, and the role is ISA has been weakest in this area.

The principal sources of the Secretary's advice on budgetary and force level issues have been the military services and the Joint Chiefs of Staff as a body, along with the Office of the Comptroller and the Office of Program Analysis and Evaluation (formerly Systems Analysis). These offices are somewhat remote from the perspectives involved in fitting military forces into our overall foreign policy. But it is essential for effectiveness and economy that defense improve its ability to relate military force requirements to foreign policy objectives. This, in turn, implies an influential role for ISA in shaping the broad outlines of our military forces. Accordingly, we recommend that:

The Assistant Secretary for International Security Affairs should play an increased role in shaping the defense program and budget to fit our foreign policy. This requires that ISA develop greater

Approved For Release 2003/02/27 : CIA-RDP86B00269R000600030001-1

Approved For Release 2003/02/27 : CIA-RDP86B00269R000600030001-1

technical and analytical capability, and that it take the lead in research and analyses to better relate force levels to foreign policy implications of major resource decision.

None of these activities requires major changes in ISA's charter or personnel levels, though some increases in personnel and possibly use of outside support should be expected. It does require an increased emphasis on the part of the Secretary and of ISA leadership on the importance of relating our military forces to our policy objectives.

The Secretary and the Role of the JCS. The second major aspect of the Secretary's responsibility that influence foreign policy is his role in the national military chain of command. The 1958 Amendments to the National Security Act removed the military services from the chain of operational command. But a 1958 directive from the Secretary of Defense to a degree brought the services back into the chain by providing that the Joint Chiefs of Staff would act as the Secretary's staff for operations. In practice the service chiefs (acting in their joint capacities) were injected back into the chain of command. Moreover, each chief has maintained his own service-based operational staff in addition to the large operational directorate (J-3) of the Joint Staff.

This situation has significant implications for U.S. foreign policy in that it raises the possibility, highlighted in some of the Commission's research, of particular service interests and viewpoints seriously detracting from the integrity of the Unified Command structure and the effectiveness of military operations in a crisis.

The Chairman and service chiefs tend to act as a separate element in the command structure, rather than as "staff" to the Secretary in his statutory role. While JCS procedures give the Chairman some freedom to act individually in operational matters if there is not time to consult the other chiefs, the consensual nature of the JCS decision-making process imposes strong constraints on the Chairman and inhibits his role as staff and advisor to the Secretary.

The Commission believes the basic wisdom of the National Security Act and its amendments in affirming the principle of civilian control and unified planning and command structure is unchallenged by events of recent years. The 1970 Blue Ribbon Defense Panel (Fitzhugh Report) and other reviews of defense organization have also confirmed this belief.

The Secretary's ability to exercise his statutory responsibilities in direction and control of crisis operations should be improved. Specific measures to bring this about include: provisions to insure the responsiveness of the National Military Command Center to the operational reporting needs of the Secretary (the Chairman and service chiefs would be informed simultaneously); increased autonomy for the Chairman in operational matters vis-a-vis the services (the role of service chiefs in operations should be explicitly defined as advisory to the Chairman and Secretary, service operational staffs should be sharply cut back and, if necessary, the joint operations staff, J-3, should be increased); the Chairman in consultation with the Secretary should select officers for key Joint Staff positions in operational matters, including the top officers in J-3 and the NMCC.

Approved For Release 2003/02/27 : CIA-RDP86B00269R000600030001-1

Approved For Release 2003/02/27 : CIA-RDP86B00269R000600030001-1

CHAPTER 7

THE ORGANIZATION OF INTELLIGENCE

THE NATURE OF THE PROBLEM

The maintenance of intelligence capabilities of the highest competence is essential to the national security and to the effective conduct of U.S. foreign policy. The world which American foreign policy seeks to affect is diverse, complex and rapidly changing. In such a world, policy must be based on detailed understanding of many issues, military and economic, political and scientific, foreign and domestic. That understanding requires the collection and analysis of enormous quantities of information. Much of it is publicly available, appearing in reports of government agencies and of private businesses, the reporting of the press, or publications of scholars. But much of the most critical information—especially though not solely, information concerning the military activities and capacities of potential antagonists—is not openly available.

The responsibility for gathering, evaluating and reporting such information, and for assessing its significance in combination with data openly available, is the primary mission of the U.S. intelligence community. The Commission believes that mission will remain crucial to U.S. security, and to international stability and peace for the foreseeable future. It also believes, however, that, to assure the more effective performance of that mission, a number of organizational changes should be made in the management composition and operation of the intelligence community.

Standards of Performance. Intelligence in a democracy must meet three main tests. First, it must respond to the evolving needs of national security and foreign policy decision-makers: its estimates and analyses must address the questions of real concern, and do so at high levels of competence and integrity. The second test is economy. Intelligence is a necessity, and some forms of intelligence gathering are extraordinarily expensive. Where unavoidable such costs must be borne; where unnecessary they must be avoided. Thirdly, the U.S. intelligence community must operate in such a manner as to command public confidence.

It is against principally the first two of these standards that we have reviewed current performance and projected future needs, leaving

Approved For Release 2003/02/27 : CIA-RDP86B00269R000600030001-1

Approved For Release 2003/02/27 : CIA-RDP86B00269R000600030001-1

the third largely to the several Executive and Congressional bodies now focused especially on that problem. But we believe that our recommendations will be helpful in improving performance against that third crucial standard as well.

We believe that, with respect to both the responsiveness of intelligence to the needs of policy, and the principle of reasonable economy of effort, current performance of the intelligence community can be improved. The difficulties in achieving improvement are considerable, however, because they are rooted in the very nature of the intelligence community. The key characteristic of that community is that it is made up of a large number of separate entities which, while all serving the interests of national security and foreign policy, embody differing histories, distinct missions, and separate lines of command. It is both necessary and useful that the community be composed of many elements, but that characteristic makes central direction and oversight difficult. Among the results, we believe, have been some excesses in the collection of information and gaps in its analysis; the occasional development of costly systems not because requirements demanded them but because technology permitted them; as well as occasional failures to observe those standards of conduct which should distinguish the behavior of agencies of the U.S. Government.

These findings are broadly consistent with those of many prior studies, and considerable progress in remedying the problems has been made. We believe that more is possible, however. In particular we believe that firmer direction and oversight of the intelligence community are essential. That is the main thrust of our recommendations. We detail them below, following a brief description of the intelligence community as now constituted.

THE INTELLIGENCE COMMUNITY

The various major agencies of the intelligence community are shown on the following page.

Central Intelligence Agency. Established in 1947, the CIA was mandated principally to correlate and evaluate foreign intelligence relating to the national security; to recommend to the NSC methods for the coordination of intelligence; and to perform for existing intelligence agencies services of common concern which the NSC determined could be more efficiently accomplished centrally. The agency was also authorized "to perform such other functions and duties as the NSC may from time to time direct," language which has been interpreted to grant authority for covert action not limited to the acquisition of

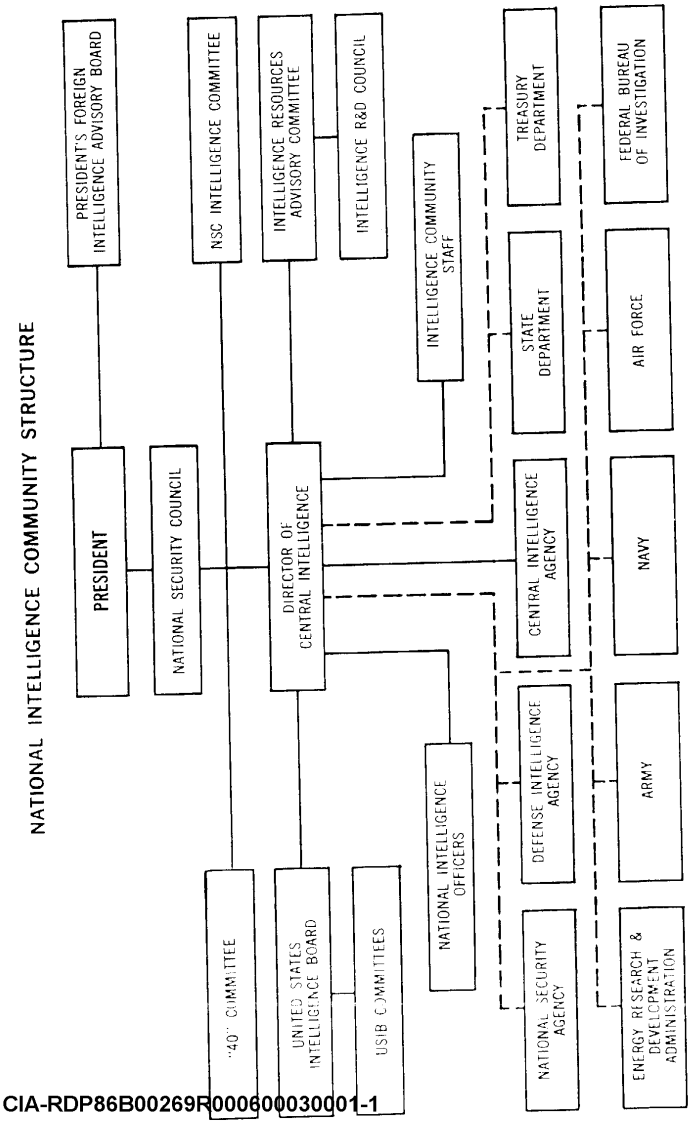

Approved For Release 2003/02/27 : CIA-RDP86B00269R000600030001-1

Approved For Release 2003/02/27 : CIA-RDP86B00269R000600030001-1

information. The agency was specifically denied any "police, subpoena, law enforcement powers, or internal security functions."

To accommodate the secrecy of its work, CIA has authority to expend funds solely on the certification of its Director, to negotiate purchases without publicly soliciting bids, and to transfer funds and people between government agencies. It is also exempt from the laws requiring disclosure of its organization, functions, and budgets, and the identity of its employees.

CIA is headed by a Director and Deputy Director, both appointed by the President and confirmed by the Senate. One or the other has always been drawn from military life. The Director of Central Intelligence (DCI) has two quite separate functions. He is responsible for all activities of the CIA, but is also the principal intelligence adviser to the President and NSC, and thereby responsible for coordinating the activities of the entire intelligence community. As suggested below, the latter responsibility has never been fully carried out.

Bureau of Intelligence and Research (INR). This bureau of the State Department is devoted to the assessment rather than the collection of intelligence. Much the smallest of the major intelligence agencies, it serves principally the needs of policymakers in the State Department, but also contributes to common analytic products of the intelligence community and specifies State's intelligence requirements. INR manages the State Department's programs for external research and provides departmental policy guidance for intelligence operations conducted by other agencies.

Defense Intelligence Agency. DIA provides intelligence support to the Joint Chiefs of Staff and the Secretary of Defense. It prepares its own intelligence assessments and coordinates Department of Defense (DOD) input to the production of national intelligence. It also manages the Defense Attache system and various other special intelligence programs. Though responsible for inducing economy and efficiency in the management of all DOD intelligence resources and for issuing defense intelligence requirements, the Director of DIA cannot control those resources, which remain under the authority of the Secretary of Defense and the direction of the individual armed services.

National Security Agency. NSA, largest of the intelligence agencies in personnel despite considerable contraction in recent years, is a semi-autonomous cryptologic agency of the Defense Department responsible principally for monitoring foreign communications and other signals for analysis by other agencies. NSA is also responsible for protecting the security of U.S. communications.

Approved For Release 2003/02/27 : CIA-RDP86B00269R000600030001-1

Each of the armed services maintains its own cryptologic agency, however, which both manages facilities on behalf of NSA and meets the special requirements of its own service.

Program for Overhead Reconnaissance. A semi-autonomous office within the Defense Department, with the largest budget of any intelligence agency, operates overhead reconnaissance programs for the entire intelligence community. The program is given general direction by the DCI and the Assistant Secretary of Defense for Intelligence, and responds to specific requirements determined by a committee of the U.S. Intelligence Board (USIB).

Army, Navy, and Air Force Intelligence. Each of the armed services maintains sizable intelligence organizations. All participate in the production of national intelligence and have responsibilities to meet the tactical intelligence requirements of field commanders, to protect the security of armed services installations and personnel, and to gather technical intelligence on the weaponry of their counterpart services in other countries.

Other Agencies. The intelligence units of the FBI, Treasury Department, and Energy Research and Development Administration are also formally part of the intelligence community, contributing specialized foreign intelligence on matters within their jurisdictions.

Direction of the Community. Two committees of the NSC contribute to the overall direction of the community:

—the Intelligence Committee (NSCIC) intended to provide a forum in which policymakers—consumers of intelligence—can inform collectors and analysts of their interests and requirements.* The NSCIC has two subcommittees: a Working Group, headed by the DCI's Deputy Director for the Intelligence Community, and the Economic Intelligence Subcommittee, chaired by the Assistant Secretary of the Treasury for International Affairs.

—the 40 Committee, which must approve covert actions and other high risk operations.**

In addition there exists a U.S. Intelligence Board (USIB), composed of all major U.S. agencies with intelligence responsibilities, and the Intelligence Resources Advisory Committee (IRAC), on which both the intelligence community and the Office of Management and

*Members: Assistant to the President for National Security Affairs (Chairman), Director of Central Intelligence (Vice-Chairman), Deputy Secretary of State, Deputy Secretary of Defense, Chairman, JCS, and Under Secretary of the Treasury for Monetary Affairs.

**Members: Assistant to the President for National Security Affairs (Chairman), Under Secretary of State for Political Affairs, Deputy Secretary of Defense, Chairman, JCS, and Director of Central Intelligence.

Approved For Release 2003/02/27 : CIA-RDP86B00269R000600030001-1

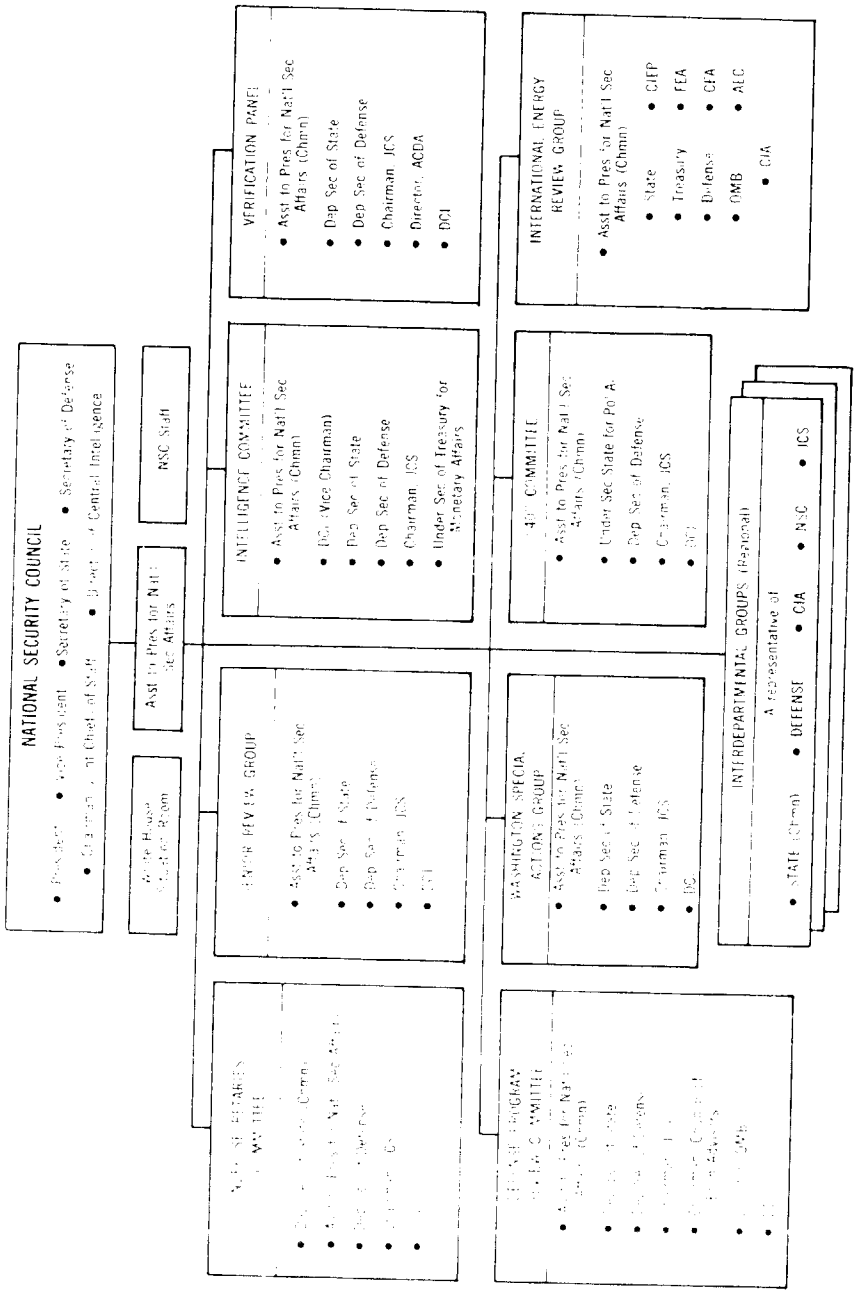

Budget are represented. Both are chaired by the DCI. USIB's responsibilities are principally to advise the DCI on the establishment of intelligence requirements and priorities, the production of national intelligence estimates, and the protection of intelligence sources and methods; IRAC is intended to advise the DCI on the allocation of resources throughout the community.

Finally, at the Presidential level, there exists a President's Foreign Intelligence Advisory Board (PFIAB). Members of PFIAB are private citizens appointed by the President, served by a 2-man staff whose head is also appointed by the President. PFIAB's principal responsibilities are to "advise the President concerning the objectives, conduct, management and coordination of the various activities making up the overall national intelligence effort;" and to consider and make recommendations concerning matters brought to its attention by the intelligence community. It can request staff assistance and special studies from intelligence agencies to augment its own efforts.

TOWARD MORE EFFECTIVE OVERSIGHT AND LEADERSHIP

None of the three major purposes this Commission seeks to advance can be met without effective communitywide leadership of U.S. intelligence. Neither responsiveness to the needs of decision-making nor economy of operation nor adherence to standards of conduct can be insured unless the intelligence community as a whole is subject to adequate supervision, and made accountable for its activities. Achieving that end has proven extraordinarily difficult. Many commissions and many presidents have sought improvements, and steady evolution in the right direction has resulted. But we believe that additional steps are now necessary.

Sources of the Problem. The difficulty of the problem arises from several causes. We have already referred to one: the community consists of many agencies, with differing objectives, traditions, and lines of command. Another is suggested by the sketch of the community offered above: the great bulk of its budget and manpower falls within the Department of Defense. Yet the Secretary of Defense clearly should not also serve as the nation's chief intelligence officer. A third arises out of the promise of technology. Where rapid developments in technology promise new capabilities, it is a common tendency for organizations to acquire those technologies without examining closely whether the capabilities are really necessary. That tendency has appeared in the intelligence community.

Prior efforts to deal with this situation have taken several forms. Presidents have used advisory boards reporting to them (PFIAB and its predecessors) to help monitor the community. Committees of the NSC (NSCIC, 40 Committee) and of principals of the intelli-

Approved For Release 2003/02/27 : CIA-RDP86B00269R000600030001-1

Approved For Release 2003/02/27 : CIA-RDP86B00269R000600030001-1

gence agencies (USIB and IRAC) have been charged with some aspects of coordination. We believe both devices are appropriate, and make recommendations for their extension below. Since the creation of CIA in 1947, however, the central figure in the direction of the intelligence community has been the Director of Central Intelligence. In addition to his responsibilities for CIA, the DCI has been charged with the oversight and leadership of the entire intelligence community.

From the beginning this arrangement has worked only partially. Having line authority over their own agency, but only limited influence over other intelligence units, DCIs have tended, especially in the early years, to devote themselves almost entirely to CIA affairs. On the authority of directives issued in 1971, DCIs have given considerably more attention to their community-wide responsibilities, and created an Intelligence Community (IC) Staff to assist them in that effort. But the Commission believes that an additional step is now necessary.

The Crucial Role of the President. It is neither possible nor desirable to give the DCI line authority over that very large fraction of the intelligence community which lies outside the CIA. If he is to effectively supervise the whole community, however, there is only one substitute for such authority, and that is a close relationship with the one official who does ultimately command each of the separate strands of that community: the President. We think it essential, therefore, that to meet his community-wide responsibilities as well as to function as the President's intelligence adviser, the DCI should have direct access to the President. We recommend, that

the DCI should have an office in close proximity to the White House and be accorded regular and direct contact with the President.

To function as the President's intelligence adviser, it is essential that the DCI have immediate access to and control over the CIA facilities necessary to assemble, evaluate and reach conclusions about intelligence in all functional fields including political, economic, military and scientific subjects. Today the bulk of the information comes from open sources, overhead reconnaissance, and electronic signals and communications, with only a small but possibly critical component derived from clandestine sources.

Therefore, the DCI would retain responsibility for the CIA, spending whatever time at CIA headquarters may be necessary. But he would delegate much of the authority for direction of that agency to his deputy. In stressing his relationship to the President, we do not mean to diminish the DCI's responsibilities to the Congress. He would continue to be confirmed by the Senate and to be available to testify and otherwise to confer with the appro[illegible] Congress.

We believe, moreover, that, to make clear the solely foreign responsibilities of the Central Intelligence Agency and of its Director,

the CIA should be retitled the Foreign Intelligence Agency (FIA), and its Director the Director of Foreign Intelligence (DFI).

We believe that certain modest extensions of the DCI's current responsibilities for community-wide planning and budgeting are also appropriate, and make specific recommendations to these ends in the pages below.

It is obviously useful for persons appointed to the DFI rank to have had some prior experience in intelligence matters. But the crucial characteristics for this position will be broad understanding of foreign and national security affairs, managerial skill, sensitivity to the constraints within which an American intelligence service must operate, independence and high integrity. The DFI should normally be a person of stature from outside the intelligence career service, although promotion from within should not be barred. And the DFI must be someone in whose judgment the President has great confidence. Without Presidential backing the DFI's community-wide role will not materialize.

A Strengthened PFIAB. In view of the special importance and sensitivity of intelligence, the Commission believes the President should have sources of advice independent of the DFI. The PFIAB should become the principal such source. In the past, PFIAB has played an important role in the development of technical collection systems, in conducting useful analyses of apparent intelligence failures, and in directing attention to new issues for intelligence concern. But we believe the Board should play a larger role—the steady, external and independent oversight of the performance of the foreign intelligence community as a whole. In this connection, the Commission notes favorably the recommendations of the Rockefeller Commission on strengthening the role of PFIAB. Both the objectives and the methods of U.S. intelligence in a rapidly changing world require such review from outside the community, and a strengthened and well-utilized PFIAB would be best situated to perform it. We recommend, therefore, that

—*each incoming President should review and make such changes in PFIAB's membership as may be required to give him high personal confidence in that body's values and judgment; that*

—*he make himself directly available to the Chairman of PFIAB upon the latter's request; and that*

—*the PFIAB staff should be increased in size, and drawn in part from sources outside the intelligence community.*

Approved For Release 2003/02/27 : CIA-RDP86B00269R000600030001-1

Approved For Release 2003/02/27 : CIA-RDP86B00269R000600030001-1

Covert Action: A Special Problem. To this point we have addressed only the intelligence activities of the intelligence community. But, in addition to those endeavors, the community—specifically CIA—has also been responsible for another activity which poses special problems of oversight and control. This is covert action, activity abroad intended not to gather information but to influence events, an activity midway between diplomacy and war. It has taken many forms, from the financial support of friendly publications to the mounting of significant paramilitary efforts.

The Commission has considered whether covert action should any longer be authorized at all. It recognizes that there are many risks and dangers associated with covert action. Partly for these reasons the use of covert action in recent years has markedly declined.

But we must live in the world we find, not the world we might wish. Our adversaries deny themselves no forms of action which might advance their interests or undercut ours, as quite recent as well as past events demonstrate. In many parts of the world a prohibition on our use of covert action would put the U.S. and those who rely on it at a dangerous disadvantage. We conclude, therefore, that

covert action cannot be abandoned, but that it should be employed only where clearly essential to vital U.S. purposes and then only after a careful process of high level review.

The current process for approval of covert action involves the submission of proposals to the 40 Committee. The Committee approves or disapproves, and its chairman, the Assistant to the President for National Security Affairs, issues appropriate instructions. In recent years, however, as authorizations have decreased in number, the procedures of the Committee have become quite informal, and it has met infrequently.

We believe present practices are inadequate. The sensitivity and risks of covert action require appropriate review and consultation. The Committee therefore proposes that:

—*Covert action should only be authorized after collective consideration of its benefits and risks by all available 40 Committee members, and that,*

—*Besides granting initial approvals, the 40 Committee should regularly review the continuing appropriateness of activities still being pursued.*

In addition to requiring careful review within the executive branch, the Commission believes that covert action should be reported to the Joint Committee of the Congress on National Security proposed in Chapter 14. We also believe that the current requirement of law that the President personally certify to the Congress the necessity for all covert actions (the Hughes Amendment to the Foreign Assistance Act of 1974, P.L. 93–559) is harmful in associating the head of State so formally with such activities. We propose, therefore, that:

PL 93–559 be amended to require reporting of covert actions to the proposed Joint Committee on National Security, and to omit any requirement for the personal certification of the President as to their necessity.

TOWARD RESPONSIVENESS: IMPROVING THE RELEVANCE AND QUALITY OF INTELLIGENCE

Relevance. Intelligence is not an end in itself; to be useful it must assist decision-makers to meet their responsibilities for national security and foreign policy. To do that, intelligence must provide answers to the questions central to the formulation of policy. The intelligence community cannot identify those questions without the assistance of policymakers.

The solution in theory is easy. Policymakers at all significant levels must regularly inform appropriate elements in the intelligence community of trends in the evolution of policy which may set new intelligence requirements. They must make clear what questions they need answered—and with what timing and in what degree of detail. And they must provide pointed evaluations of current intelligence products. But practice is harder. Policymakers are few and overburdened. Even when dissatisfied with intelligence, they are rarely willing or able to devote substantial time to determining the causes of inadequacy, and correcting them. The result is that the work of the intelligence community becomes largely responsive to its own perceptions of what is important, and irrelevant information is collected, sometimes drowning out the important.

As a result of attention to this problem in recent years, the National Security Council Intelligence Committee (NSCIC) was established to provide guidance on consumer needs and intelligence requirements, USIB was broadened by inclusion of a representative of the Treasury Department, the DCI was assigned a stronger mandate to establish requirements and to develop comprehensive community-wide plans, and the Intelligence Community Staff was established to assist the DCI especially in assessing community performance and in monitoring consumer interests.

Building on these reforms, the DCI then inaugurated several additional innovations. His IC staff began developing five-year community-wide plans, and formulating "Key Intelligence Questions" to [illegible] the concerns of principal intelligence consumers. The DCI also replaced the old Board of National Estimates with individual National Intelligence Officers (NIOs) responsible for responding to con-

Approved For Release 2003/02/27 : CIA-RDP86B00269R000600030001-1

Approved For Release 2003/02/27 : CIA-RDP86B00269R000600030001-1

sumer requests and for personally supervising the production of National Intelligence Estimates.

Most of these new steps are proving useful, but the major institution on which they all largely depend, the NSCIC, has not functioned adequately. We believe it is important to correct this situation. There was considerable difference of opinion within the Commission about how to increase the effectiveness of the NSCIC. Some favored making the DFI Chairman because, as the President's principal intelligence advisor, he would have both the authority and the incentive to bring together the key policymakers on a regular basis, as well as an intimate knowledge of the capabilities of the intelligence community. Others preferred leaving the President's National Security Adviser as Chairman because he is the principal representative of the President on national security matters. He is also an important intelligence user, and is well placed to judge the adequacy and timeliness of the intelligence product in terms of policy needs.

It was agreed that:

The NSCIC should be actively used as the principal forum for the resolution, short of the President, of the differing perspectives of intelligence consumers and producers, and should meet frequently for that purpose.

Improving the Quality of Analysis. To meet the needs of decision-makers, intelligence must not only address the key questions; it must do so at the highest levels of analytic competence and integrity. To help maintain those standards the Commission makes recommendations of four kinds.

The first and most important involves the more effective utilization of the State Department's routine Foreign Service reporting. A series of recommendations for sharpening the focus and improving the quality of that under-utilized resource appear in Chapter 9.

The second proposal involves economic intelligence. As the economic content of foreign policy increases, it is crucial that accurate and far-sighted analyses of global demand and supply problems, emerging international trade and investment opportunities, and international monetary matters be available to foreign policy decision-makers. Unlike military intelligence, which frequently requires enormous investments in data gathering, most economic issues do not depend upon secret information. The key to their understanding lies in highly competent analysis of readily procurable data. Commendably, CIA has greatly strengthened its capability for economic analysis in recent years. But—with some exceptions—this is not a field in which CIA, or the intelligence community generally, [illegible] tage. Moreover, though duplication in large-scale data-gathering is expensive and wasteful, competition in analysis is relatively cheap and highly desirable. We recommend, therefore, that

while the intelligence agencies should retain and exercise their improved competence in the analysis of international economic issues, the Departments of State, Treasury, Commerce, and Agriculture, and the Council of Economic Advisors must maintain similar capabilities focused on the analysis of issues involving their own responsibilities. We believe that, in all four of the Departments, those capabilities should be significantly strengthened.

Thirdly, we propose a modification to the NIO system. Prior to 1973, National Intelligence Estimates (NIEs), the formal expressions of the intelligence community's best judgment on major issues, were produced by a Board of National Estimates. But that collegial process tended to produce better estimates of what the community could agree upon than what policymakers needed to know. The Board has been replaced by some eleven individual National Intelligence Officers (NIOs), each charged with insuring the responsiveness of NIEs to policy needs in particular substantive areas. NIEs are now drafted by individual experts selected by the NIO from various intelligence agencies. Predictably, the gains in responsiveness of estimates have been somewhat offset by problems of reliability, and the practice of requiring officers already bearing other responsibilities to undertake the production of NIEs has created unnecessary burdens. Most important, NIEs appear to have little impact on policymakers today, in large part because key consumers prefer to base their own estimates of future developments on competing sources of information and analysis. NIEs have lately begun to reflect more clearly differences in view within the intelligence community, but we believe that this process should be intensified. For these reasons we propose that

a small staff of the highest quality, drawn from within and without the intelligence community and responsible for the drafting and review of NIEs, should be established. This staff, reporting directly to the DFI, should be charged with reporting clearly any important differences in the views of concerned agencies, and the reasons for such differences.

Finally, we note that, while investing very large sums in sophisticated technical means of intelligence collection, the community has tended to slight the contribution that only human sources can make. On many subjects, the completeness and accuracy of intelligence estimates depend on factors of intention and motivation that only human sources can provide. We believe that efforts to maintain and utilize such sources [illegible] and strengthened. These efforts should include improved Foreign Service reporting (elsewhere discussed),

Approved For Release 2003/02/27 : CIA-RDP86B00269R000600030001-1

Approved For Release 2003/02/27 : CIA-RDP86B00269R000600030001-1

reenforced clandestine collection, and changes in the military attache system designed to make the attache service an important part of career progression for capable officers.

MAKING MORE EFFICIENT USE OF INTELLIGENCE RESOURCES

Resource management, like other major problems of the intelligence community, has received considerable attention in recent years. Two recent institutional innovations—the IC Staff and IRAC—have proven useful, and the combination of organizational change and the personal concern of recent DCIs and Secretaries of Defense have produced a very substantial cutback in intelligence personnel and a leveling of the intelligence budget over the past several years.

The Consolidated National Foreign Intelligence Budget developed by the DCI in each of the past several years has presented a comprehensive overview of the intelligence effort useful to the budgetary review of OMB, the President, and the Congress. And the DCI has developed an annual analysis of the political, economic, and security environment anticipated in the next five years, called "Perspectives for Intelligence," which should make possible more comprehensive community-wide planning of activities and consequent allocations of budget.

We believe two evolutionary steps would now be useful.

Under the direction of the DFI, the IC staff should expand "Perspectives for Intelligence" into an annually revised multi-year plan for the allocation of responsibilities across the intelligence community. The plan should be reviewed in USIB and approved by the NSCIC.

On the basis of the multiyear plan, the IC staff should prepare an annual Consolidated Foreign Intelligence Budget. After review by IRAC and OMB, this document should guide the budget submission of each of the agencies and departments of the intelligence community to OMB. It should also provide a basis for the consideration, by the proposed Joint Committee of the Congress on National Security, of the funds to be annually authorized the intelligence community.

Resource Management in DOD. However influential the DFI may become, the preponderance of the intelligence budget, appropriated by Congress to the Department of Defense, will continue to fall under the authority of the Secretary of Defense. The Commission makes no recommendation concerning the organization of intelligence functions or responsibilities within the Department of Defense. But it asserts that, if the resources applied to intelligence are to be allocated in accordance with the overall priorities established by the NSCIC and the DFI and utilized more efficiently, the Secretary of Defense must serve as an agent of these priorities. In order to do so, we believe, he will have to equip himself with the analytic and managerial capacity necessary to oversee the large and partly duplicatory intelligence operations of the armed services.

Approved For Release 2003/02/27 : CIA-RDP86B00269R000600030001-1

Approved For Release 2003/02/27 : CIA-RDP86B00269R000600030001-1

CHAPTER 8

PUBLIC OPINION AND HUMANITARIAN CONSIDERATIONS

We group together here two important, pervasive, subjects because, though different, they bear quite similar relationships to the problem of formulating and carrying out foreign policy, and because they also have in common a relation to the fundamental values of our nation. These are the roles of public opinion and of humanitarian considerations in the making of U.S. foreign policy.

Many have told us that any effort to deepen the involvement of the American people in the making of foreign policy is impossible or dangerous. They argue that the role that the general citizenry can—or should—play in the conduct of foreign policy must of necessity be very limited.

Similarly, some have taken the position that ethical and moral components of foreign policymaking, together with the associated problems of human rights, are too elusive to be given organizational weight, and that either policy will be made by those sensitive to moral and ethical constraints, or it will not.

We do not believe that all problems of the foreign policy process can be solved by organizational means, but we do believe that organizational changes can be helpful.

PUBLIC OPINION AND FOREIGN POLICY

Public opinion only intermittently makes itself felt on foreign policy issues. It focuses mainly on dramatic national security questions, especially those involving the actual or possible use of American forces abroad. The best predictor of public interest is whether a substantial portion of the public sees itself directly affected by an issue. If, as we believe, our future foreign policy will be dominated as much by economic problems having direct domestic impacts as by political-military issues, public concern with foreign policy will be substantially heightened. There will be a greater incentive to learn about foreign policy, and an increased desire to communicate views about it to government officials.

New political realities thus reinforce traditional political theory. Both suggest that the public must possess accurate information about

Approved For Release 2003/02/27 : CIA-RDP86B00269R000600030001-1

Approved For Release 2003/02/27 : CIA-RDP86B00269R000600030001-1

what the government is doing or proposes to do, and why. Similarly, better channels of access to policymakers for expressions of public attitudes about current or possible actions will be useful.

We believe that future policies will involve hard choices and trade-offs, with domestic sacrifice, sometimes necessary as the price of foreign policy gains. In such instances both the Executive and Congress can expect to receive strong public expressions of attention and concern. Effective policymaking will be further complicated because, while the effect of foreign actions on the U.S. are quite obvious, the impact abroad of U.S. actions are often less clear to the American people. A coherent policy requires balanced attention to both foreign and domestic implications of world interdependence.

We believe these developments will add to two already difficult problems. Public opinion is volatile. Radical swings in public opinion present constraints on responsible foreign policymaking. Secondly, the issues we believe will come to the fore in the next years are likely to be featured by long time frames, requiring maintenance of policies whose costs may be immediate, but whose benefits are distant. In both cases, the positions taken by national leaders—executive and congressional alike—will be critical. The public will need to be adequately informed if it is consistently to support constructive policies in the national interest.

The public involved in future foreign policy issues will be much broader than the small groups which have traditionally participated in foreign affairs, or the representatives of specific interests directly affected by legislation or decision. Public involvement will include not only many individuals who in earlier days would have shown no continuing interest in foreign policy, but also organizations interested in the quality and openness of government, and intent upon active participation in the development of public policy. Much of this attention will be devoted to the Congress. By virtue of the increasing interrelationship between domestic and foreign considerations and with the increased awareness through TV of events throughout the world, Congressional constituencies will more heavily and continually than heretofore be engaged in matters of foreign affairs. This involvement may be to the discomfort of some of the Members of Congress who at times have taken refuge in aloofness from responsibility for foreign policy. To a far greater degree than previously, foreign policy issues will concern all Members of Congress and not simply the foreign affairs committees and the leadership.

In this changing climate, the challenges facing political leadership, congressional and executive, in resolving conflicts and in making intelligent policy choices will be less difficult if the public is well informed. The government will need to convey more information to the public, and in return to receive a m[illegible] ance and support for current and proposed policies.

Against this background, the Commission believes that there are a number of ways of improving the two-way flow of information between public and government. We are fully aware that devices and procedures to improve commuications cannot substitute for receptiveness to what is being communicated. We are also aware that there are no simple solutions to the problems of public opinion and public education on foreign policy issues.

We divide our recommendations into two categories: those directed to improving the amount and quality of information about foreign policy which is available to the public; and those designed to improve the transmittal of public opinion about foreign policy issues to both Congress and the executive branch.

Informing the Public. The Commission believes that the quality, relevance, and in some cases, the quantity of information the public receives about foreign policy must be improved. Multiple sources are required, since government officials will understandably strive to present current policies in the most favorable light. Official statements arguing the merits of specific policies will remain the starting point, but the executive branch should be receptive to the expression of alternative views. Obstacles to obtaining and presenting factual information, whether by the Congress, the news media, or private organizations, should be reduced.

The Commission therefore is recommending (Chapter 14) that recent trends toward opening to the public the deliberations of Congress on major foreign policy issues be encouraged and that Committee hearings and under certain circumstances floor debates be open for television.

Executive branch officials should provide information with specificity and completeness, whether through press conferences, speeches, informal presentations, and publications. Periodic, scheduled opportunities to explain policy should be accompanied by arrangements to encourage public dialogue. To this end we recommend that:

> *The executive branch foreign affairs agencies should seek adequate funding for the specific purpose of developing more comprehensive public affairs programs.*

This effort may require a change in congressional attitudes about authorizing and appropriating funds for domestic information purposes, but we believe the nature of emerging issues makes such programs necessary. Similarly, some relaxation on the distribution of USIA materials domestically may be appropriate.

In a similar vein, we have recommended in connection with planning [illegible] the practice of issuing authoritative annual reports on foreign policy such as "The State of the World" report

Approved For Release 2003/02/27 : CIA-RDP86B00269R000600030001-1

Approved For Release 2003/02/27 : CIA-RDP86B00269R000600030001-1

should be reintroduced, and that Congress should conduct hearings to review and illuminate controversial aspects of these reports.*

This annual report should be prepared in an attractive and readable format, to encourage wide attention. Together with Congressional debate and public discussion, such a report should help develop and articulate a new conception of national purpose toward other nations. Private organizations interested in foreign relations, such as the World Affairs Councils in many cities, might be encouraged to review and critique the annual report. The report would clearly serve a wider purpose than simply public information; indeed it would become the clearest and most comprehensive enunciation of the conceptual base of U.S. foreign policy. Nevertheless, for public information purposes alone, it can have untold value and warrants the assignment of high level staff to insure its most effective presentation.

These steps would improve the quality of information provided to the public by government. But, by themselves, they are obviously insufficient to insure that the level of public knowledge is adequate. Alone, they run the risk of providing one-sided views, and therefore need to be supplemented by non-official sources. The press will always provide much of the short-term information, and educational institutions the frames of reference for current events. Timely and accurate information should be available to the public in a forthcoming fashion.

The Commission considered the advisability of creating a "National Endowment for Foreign Policy Information" or other official or quasi-official mechanism, whose purpose would be to further the exchange of information by private citizens, organizations, and the government itself, and perhaps to provide grant support for private programs dealing with foreign affairs. We have concluded that such a clearing house for information would seem to us to be highly desirable, but we believe it should be a private sector activity.

However, on a broader level, efforts to improve national educational programs are essential in developing a sophisticated public understanding of complex issues. To that end, the Commission recommends that:

The International Education Act of 1966, or an equivalent act to develop and support programs of advanced and undergraduate international studies, should be funded. Its objectives might be broadened to include programs designed to provide (a) extensive research in foreign policy fields and (b) better substantive training for journalists.

Informing the Government. In the American constitutional system responsibility for foreign policy rests with the executive branch and Congress. Both must be responsive to the public but responsible for

Approved For Release 2003/02/27 : CIA-RDP86B00269R000600030001-1

ical leadership requires that elected and appointed officials be willing to take the lead in actions which they believe to be right but which may be currently unpopular. At best, the member of Congress or executive policymaker may be aware only of the views of specific interests likely to be affected by a proposed action, with little sense of how accurately this reflects broader public opinion. This problem can never be completely solved; the general public forms opinions on many issues only when confronted with the results of actions already taken. In any event, "government by referendum" is neither desirable nor practical, even in relation to the broad and continuing direction of overall policy and national goals.

The Commission believes that improvement is possible in what the government does know about public opinion; the nation is best served by government officials knowledgeable about views of their fellow citizens.

Polling is one such useful way of determining the trends of public opinion on issues of major importance. Results of such polls, particularly on embryonic issues, cannot be considered definitive, but they can serve a number of important purposes if they are closely heeded to by policymakers. In some cases they may provide early warning of swings in public opinion which might need to be taken account of in order to carry out responsible policies. They can also give indications of instances in which the reasons for policy may be perceived very differently by the public than by government officials. Implicit in these reasons is that polling provides a means for views of the general public to be conveyed to policymakers, unfiltered by expressions of special interest.

Because of the potential utility of public opinion polling, the Commisison considered carefully whether to recommend that the government resume polling, possibly under the joint auspices of the executive and legislative branches, with the results made public. We have concluded that such polling is properly a private sector activity, and that reputable private polling organizations are best equipped to carry it out. We do encourage policymakers, however, to employ the results of polls as one element in their consideration of complex policy issues.

We recommend in addition that:

Forums for interchange of views and opinion between government, particularly the State Department, and the public be expanded.

For example, the small current program for periodic meetings between representatives of state and local governments and the State Department on issues that affect governments and constituencies at that level should be expanded, and broadened to include other departments as well. Similarily, widespread communication channels should be

* See Chapter 10 for the recommendation proposing such a report and Chapter 14 for the recommendation proposing such hearings.

Approved For Release 2003/02/27 : CIA-RDP86B00269R000600030001-1

strengthened between key Department of State officials and the general public as well as the major voluntary organizations with foreign affairs concerns. While the proposal made by some of a centralized "Citizens Foreign Affairs Council" with national representation seems impractical because of difficulties in determining membership, regional bodies or conferences based on voluntary participation and premised on serious discussions of specific agendas seem to us to be a promising means of facilitating communication. We also believe that exchange programs for Foreign Service Officers to universities, to state and local governments and to Congressional staffs should be further encouraged.

The Commission is more concerned that a wide range of consultative mechanisms be encouraged than with advocacy of any of those suggested here. What *is* important is that there be channels of access to policymakers by citizens groups, and that they be used to improve the information available both to the public and to the government.

More generally, we believe that official spokesmen responsible for explaining policy to the press and public should be given a more active role in the policy process. This would not only reduce the "second-hand" nature of information given out, but make it more probable that policymakers would be better informed about the real concerns of the public and the press while actually making policy. Spokesmen who are also policy participants and who must confront questions about what is being done on a routine basis are likely to have a much better sense of public opinion than those who are more insulated. If many policy choices are likely to be as difficult as suggested earlier because of the conflict between domestic and foreign policy goals, as much knowledge as possible about what is acceptable should be welcomed. Similarly, results of major public opinion polls should be systematically brought to the attention of policymakers.

In conclusion, the Commission hopes that the recommendations and suggestions presented could lead to an improved dialogue between citizen and government. We believe that they do not cross the narrow line between informing and educating the public on the one hand, and influencing public opinion for political or policy advantage on the other. This line is not always clear, and safeguards and periodic reassessments are vital. But we believe it is even more dangerous in a democratic society for the public, because of the unavailability of accurate and timely information or of a means of expressing opinions, to be denied the opportunity to state their preferences on policies which affect them directly; and equally dangerous for policymakers to act without benefit of such expressions of the public will.

HUMAN RIGHTS, HUMANITARIAN AND ETHICAL CONSIDERATIONS IN THE CONDUCT OF FOREIGN POLICY

Virtually all major foreign policy issues contain some ethical component. Ethical aspects of policy may be obvious, as in such issues as the emigration rights of Soviet Jews, apartheid in southern Africa, or drought relief for the Sahel. They may be less evident in such issues as trade relations with developing countries, access to raw materials, political relations with authoritarian regimes, strategic doctrine and weapons design, and environmental and oceans policies. They arise in novel problems (e.g., weather modification) in familiar problems involving new sensitivities (e.g., covert political action), and in unresolved issues with which societies have wrestled since the beginning of recorded history (e.g., rules of war).

The Commission believes that one of the enduring goals of U.S. foreign policy is a world order in which all nations respond to the urgent needs of those who have been victims of disaster, or denied basic rights. It believes therefore that the U.S. must take special care to insure that in both word and deed our own foreign policy reflects devotion to high ethical standards.

To that end, we propose a number of organizational and procedural measures. We offer these proposals as we do our others, knowing that organizational forms do not assure policy results, but conscious also that they may increase sensitivities and thus help insure that due consideration is given to ethical arguments in the setting and carrying out of policy.

It is useful to distinguish among three kinds of ethical considerations in foreign policy. One category can be termed "Humanitarian." Issues of this character involve people affected or threatened by natural or man-made disasters, who can appeal to the humanity or charity of their fellow humans, but possess no claim of right against any external power. Humanitarian issues are generally the least controversial of those involving ethical considerations in foreign policy. In practice their resolution usually involves the allocation of resources, in money or in kind, in aid of those in need. Such aid may be given to victims of droughts, epidemics and earthquakes, refugees and victims of war. The needs of such victims are generally obvious and frequently poignant; U.S. response to them has generally been good. Organizational responsibility for these humanitarian programs is focused in the Offices of Refugees and Migration Affairs, Private and Voluntary Cooperation, Foreign Disaster Relief Coordination, in the State Department and in A.I.D.

The central problem is that these offices are not organized to work *together* effectively. A recent report by the Inspector General of the Foreign Service observed that the various offices function too independently of one another. Improved coordination of effort should be the primary objective of any change. A more unified structure, more over, would give greater weight to the humanitarian perspective in the U.S. decisionmaking process generally.

A second category of issues, "Human Rights," involve deprivations

Approved For Release 2003/02/27 : CIA-RDP86B00269R000600030001-1

Approved For Release 2003/02/27 : CIA-RDP86B00269R000600030001-1

attributable to a government's policies or negligence—the protection of inherent and universal rights of persons to life, liberty, the security of person, freedom from slavery, torture, or arbitrary arrest; freedom of religion, and equal protection of the law. Questions of the weight to be accorded these rights arise in connection with issues as diverse as those of political asylum, the treatment of prisoners of war, U.S. relations with authoritarian regimes of right and left, and the use of some forms of covert action.

Organizational responsibilities for the representation of human rights in our government have undergone recent change. The State Department in 1974 and 1975 has supplemented the small Human Rights Office in what is now the Bureau of International Organizations Affairs, in existence since the 1950s, with an Assistant Legal Adviser for Human Rights, Human Rights Officers in each regional bureau, and a Coordinator for Humanitarian Affairs in the Office of the Deputy Secretary. Although it is too early to make a firm evaluation of these innovations, some problems are already apparent. The Foreign Service Officers assigned the new regional Human Rights positions continue to carry their previous full-time responsibilities; their human rights function is therefore of secondary priority. Moreover, nothing insures that these officers are included in crisis discussions of issues with human rights or humanitarian implications, especially if the implications are not immediately obvious. The Coordinator for Humanitarian Affairs, who has recently been named as a special assistant to the Deputy Secretary, may not have the capability for an effective follow-through on the many diverse issues involved. Moreover, these various organizational entities, like the humanitarian officers, have had no focal point and have lacked coordination. While the recent changes are laudable, they are likely to prove insufficient.

The foregoing problems are relatively easily identifiable. They involve moral dimensions that humanity has recognized for centuries. The third category, that of general ethical responsibilities, is less clear-cut. The ethical responsibilities that man has to man and nation to nation, where neither recognized rights nor dramatic misfortunes are involved, are more subtle and less certain. But ethical issues lie close to the heart of many current international differences: problems of arms control and disarmament, including weapons design and strategic doctrine; problems of the redistribution of wealth, including terms of trade, and transfers of capital and of technology; and food and population policies. The resolution of these issues will require attempts to apply basic ethical norms as well as other criteria in the formulation of policy.

A few commentators have gone so far as to suggest the appointment of a number of "counsellors in ethics" who would sit with top policy

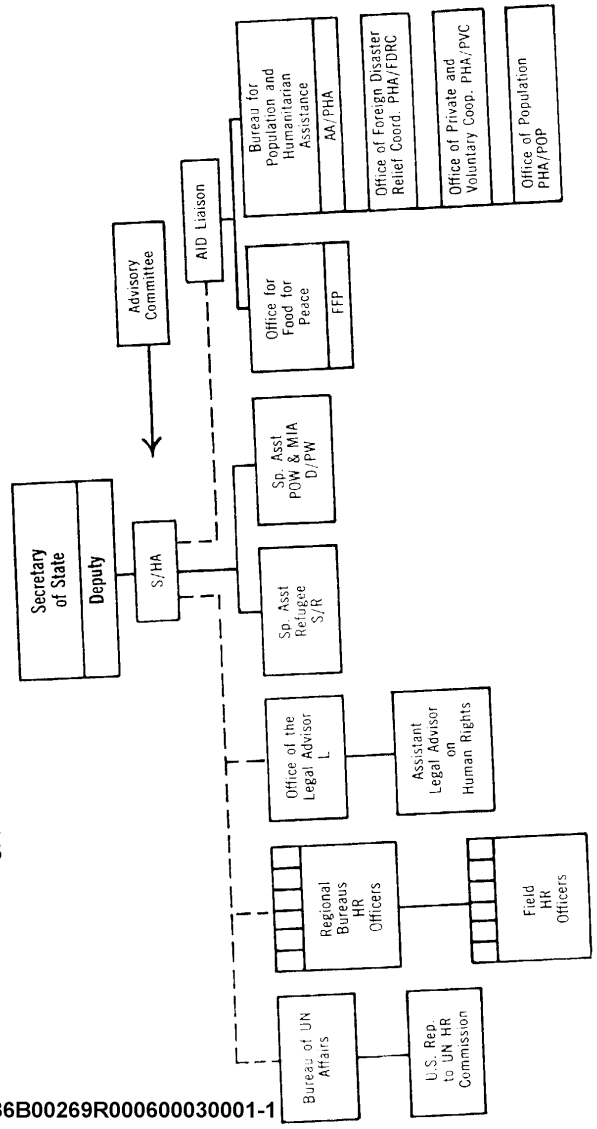

Approved For Release 2003/02/27 : CIA-RDP86B00269R000600030001-1

Approved For Release 2003/02/27 : CIA-RDP86B00269R000600030001-1

officers and advise them on the ethical aspects of policy matters. Though the Commission believes that special offices of this kind are probably inappropriate, it is reasonable to design the organizational arrangements in such a way as to increase governmental sensitivity to more general ethical concerns.

In this spirit, the Commission wholeheartedly supports the recent creation of the Office of Humanitarian Affairs (D/HA). The proposed structure for this office will include a Coordinator for Humanitarian Affairs and a Deputy Coordinator for Human Rights. The various functions of this office will include coordination of humanitarian programs and human rights matters for which the various offices and bureaus of the Department are responsible. However, we recommend that:

Because of the importance of the functions of the Office of Humanitarian Affairs (D/HA), its director should have the title of Special Assistant to the Secretary of State.

As such, he can facilitate coordination with the Bureau for Population and Humanitarian Assistance (AA/PHA) at AID and serve as a high level focal point for ethical concerns in U.S. foreign policymaking. Unavoidably, this officer will tend to be drawn into operational functions. The Commission cautions that the primary functions of the office should be staff counsel and policy guidance. An early appointment of the proposed Deputy Coordinator might assist in maintaining continuity at all times.

The Commission also recommends the following:

The Department of State should create an Advisory Committee on Human Rights to advise the Department on U.S. policy with respect to international human rights issues. This committee should include selected representatives of nongovernmental organizations, scholars, Members of Congress, churchmen, and others active in the Human Rights field.

Decisions involving the use of force should be made with prior recognition of their ethical implications and standing in law.

The Department of State should make instruction in ethical and human rights considerations an integral part of the basic training of Foreign Service Officers and of the various area studies programs.

The U.S. Representative to the Human Rights Commission should be a full time official of ambassadorial rank and assigned broad responsibility for human rights considerations inherent in all U.S. participation at the United Nations. If necessary, the Ambassador should be provided with additional staff for this purpose.

Chiefs of missions in sensitive human rights areas should assign personnel to monitor and report on Human Rights issues.

Approved For Release 2003/02/27 : CIA-RDP86B00269R000600030001-1

CHAPTER 9

THE PRACTICE OF DIPLOMACY

The conduct of foreign relations among states through the exchange of representatives has been the first task of diplomacy for centuries. The attention the Commission gives in this report to the policymaking process in Washington does not diminish the importance of diplomatic activity; both policymaking and diplomacy are integral parts of any "effective system for the formulation and implementation of the Nation's foreign policy," to quote from the Commission's mandate.

In this chapter, the Commission's findings and recommendations are presented with respect to three types of diplomatic activity: bilateral diplomacy between states; multilateral diplomacy involving many states; and "public diplomacy," the cultural and information programs carried out by the United States in other parts of the world.

BILATERAL DIPLOMACY: THE ROLE OF OVERSEAS POSTS AND MISSIONS*

Historically, the United States has looked to its diplomatic posts and missions abroad to serve the nation in a variety of ways:

—to communicate with foreign states.

—to negotiate and administer agreements with foreign governments.

—to report on events and host government reactions to them.

—to improve mutual understanding with the officials and people of the countries involved.

—to promote U.S. trade and assist American businessmen abroad.

—to meet the needs of American citizens and travelers.

—to provide supervision, coordination, and administrative support for the activities of other agencies of the U.S. Government.

* This Section draws particularly on papers prepared for the Commission by [illegible] Godfrey Harris, William O. Hall, Foy D. Kohler, and J. Robert Schaetzel, most of which are reprinted in Appendix Q to the Commission's Report.

Approved For Release 2003/02/27 : CIA-RDP86B00269R000600030001-1

The world is changing rapidly, and the conduct of international relations must evolve accordingly. The increasing importance of multilateral diplomacy, the use of special envoys and presidential representatives, the tendency to send specialists directly from Washington to conduct major negotiations abroad, and the increased speed of communication have radically changed the character of modern diplomacy. But as long as the world is organized into nation-states, relationships among those states will be of importance, and diplomatic missions accredited to other nations will be an essential element of our diplomacy.

The traditional functions of diplomatic posts and missions therefore remain important. Their nature, however, is evolving, and their relative importance is changing. Three important new emphases distinguish the work of the field posts.

Foreign Assessment. The most important modification needed in embassy responsibilities is to bring a far greater emphasis on the analysis of probable host country responses to emerging issues of concern to the U.S., a function we term "foreign assessment."

Foreign assessment is analytic as well as factual. It includes not simply reporting but predictions and proposals on specific issues. It is concerned with understanding why foreign governments are taking, not taking, or are likely to take certain actions; predicting the impact in that country of proposed U.S. actions; and conveying this information in a form which suggests how U.S. initiatives can be designed or modified to have their desired effect. Such assessment requires a sense of priorities about which actions and issues warrant intensive analysis, and which are below the threshold of policy importance.

The assessment role, to be effective, must be closely shared by field missions and by country and functional experts in Washington. Embassies have always been called upon to report fully and intelligently on host country developments. What we are suggesting is, firstly, that this responsibility has become the most important single function of U.S. embassies abroad; and secondly, that the depth, breadth, and quality of that assessment must be so much greater than has been traditional as to make it very substantially different.

Some such assessment is now performed in connection with political, economic, military, and technological reporting. But there are strong indicators that present reporting, while voluminous, too often focuses on simple description, and too seldom upon the interpretation of events and long-term possibilities. Specific recommendations concerning improved reporting—that source material for the overall assessment effort provided from field posts—are presented in a subsequent section.

Diplomatic Support and Oversight. A second new emphasis relates to the mounting use of special representatives from Washington for negotiations in the field, and the increasing number of agencies having business with foreign governments which require the presence of their own representatives abroad. International transactions are carried out more and more through specialists. But effective bilateral relationships require the Ambassador and the mission to be heavily involved in these technical activities. In some cases, the Ambassador will be called upon to supervise activities of other agencies; in others he will merely coordinate and provide administrative support for them. In all cases, he must be fully informed about and able to monitor their activities in order to insure that they are compatible with overall policy towards the country in question. When questions arise, the Ambassador should have means of reconciling divergent views, either through his own authority, or through his ability to gain the attention and support of higher policymakers in Washington.

Bilateral and Multilateral Diplomacy. As we argue elsewhere, multilateral diplomacy will be increasingly important for a wide range of issues, particularly those related to global interdependence. Nation-to-nation negotiation of treaties and agreements, at least relatively, is diminishing; it has been widely superseded by negotiations in the United Nations and the growing number of international agencies. But multilateral diplomacy does not substitute for bilateral diplomacy. Rather, effective multilateral diplomacy, conducted in forums where U.S. views may be in the minority, increasingly will be dependent upon proper support from posts and missions abroad. Embassies will need to be much more attuned to important issues pending in conference settings, to the positions of governments to which they are accredited, and to the possibilities of obtaining support for U.S. positions in multilateral discussions through bilateral persuasion. We believe that this expanded requirement for support of multilateral negotiations, in addition to the continuing need for effective bilateral negotiation, is important enough to qualify it as the third new emphasis required of posts and missions abroad.

The American Ambassador. These new emphases in the activities of missions abroad have important implications for the role of the Ambassador. The ability of the post to provide superior assessment, to guide and monitor the activities of other agencies and special representatives, and to provide timely support of multilateral initiatives, is dependent upon the Ambassador's fulfillment of his central role and upon the authority he is given.

Our concept of the role of the Ambassador flows from one basic principle: the Ambassador is, and must be, the central representative of the United States, and of the President. All other embassy personnel, temporary and permanent, Foreign Service or other agency, specialist or generalist, of high or low rank, are extensions of the Ambassador. This concept has been reaffirmed by a succession of presidents, and

Approved For Release 2003/02/27 : CIA-RDP86B00269R000600030001-1

Approved For Release 2003/02/27 : CIA-RDP86B00269R000600030001-1

more recently, made a part of law.* The Commission believes, however, that actual practice continues to fall short of this goal, and that remedial action is necessary.

It is imperative for the Ambassador to serve as the representative of the President and the entire government, rather than simply as the senior Department of State official, if he is to coordinate effectively all U.S. activities in the country to which he is accredited. To do so, he must have control over embassy communications and access to all reports proposed by all personnel assigned to the embassy.

These responsibilities will require Ambassadors who are at once broad-gauged and knowledgeable, who can as the head of mission fulfill both managerial and analytic roles and as personal representatives of the President, advise on policy matters. Success will also require a willingness to draw upon his advice, and to keep him fully informed of activities which affect the success of his mission.

Ambassadorial Appointments. The qualifications sought in an Ambassador should be derived from both the requirements of a specific assignment and from the more general qualities needed to carry out the foregoing functions. Nominations should not be merely rewards, either for financial contributions or political services, nor for surviving a requisite number of years in the Foreign Service.

The Commission, therefore, believes that reserving a certain percentage of positions for Foreign Service Officers is an inappropriate means of reaching the laudable goal of greater ambasadorial competence. While we would expect the majority—perhaps a large majority—of ambassadors to be foreign affairs professionals, we do not advocate that they necessarily be drawn from the Foreign Service. Rather, the individual with the best qualifications for a given position should be selected. It is likely that some ambassadorial positions can best be filled from the senior career ranks in other foreign affairs agencies such as the Information and Cultural Affairs Agency, AID, possibly the International Security Affairs section of the Defense Department, and from the internationally oriented elements of departments such as Treasury, Agriculture, and Commerce. The Commission, therefore, recommends that:

The Executive Development Staff of the Foreign Affairs Executive Service (proposed in the Personnel Chapter of this Report) should be given responsibility for identifying qualified individuals throughout the government, and for recommendation to the president as potential ambassadorial nominees. Similarly, when circumstances call for appointment of individuals outside the government, whether from business, labor, or the academic world, they should be appointed; the guiding principle must be to match job needs with the best qualified individual available.

Within this fundamental approach, the Commission believes it is desirable and necessary that the Ambassadorial corps be representative of the country and its people. Qualified women and members of minority groups must have equal access to these positions.

The Senate Foreign Relations Committee can play an important role in insuring the quality of ambassadorial appointments. Close scrutiny of nominees should be the norm, and their qualifications should be examined on grounds of ability as well as to screen for patently political rewards. This recommendation is spelled out in Chapter 13 dealing with the Congress.

Once the best individuals available have been chosen and confirmed, Ambassadors should have tours of duty long enough to allow them to gain sufficient awareness of the people, leaders, and institutions of the countries to which they are accredited to be useful. The enhanced importance of the assessment role in the future makes this especially important. For this purpose one or two year tours will normally not be enough.

The Deputy Chief of Mission. While progress has been made recently in understanding the importance of the Deputy Chief of Mission (DCM) role and in preparing designees to fulfill it, the Commission wishes to underscore its importance, particularly in larger missions, and especially in assisting the Ambassador in carrying out the new emphases suggested above. The DCM should be a true deputy, prepared to serve as both alter ego to the Ambassador and his chief executive officer. His strengths and those of the Ambassador should be complimentary; his professional country expertise can overcome an inexperienced Ambassador's limitations, and he can serve as the manager of the Embassy if the Ambassador is oriented toward external considerations. The personal nature of an effective Ambassador-DCM relationship is highly important for effective embassy performance, and suggests that no one standard pattern is desirable.

Because of their close relationship to their Ambassador, and the importance of their role to the success of the mission, as much care should be given to selecting able DCMs as to finding superior Ambassadors. They should normally be selected from the best qualified careerists available throughout the government. Critically important, too, is the need to develop potential DCMs by insuring that career officers in the foreign affairs field are provided training and experience in directing organizations of more than just a few sub ordinates. This ability must be acquired and, as this Report's Personnel chapter discusses, the Foreign Service does very little to develop that ability in its officers.

*Public Law 93-475, October 26, 1974, Section 16. (State Department/USIA Authorization Act, Fiscal Year 1975.)

Approved For Release 2003/02/27 : CIA-RDP86B00269R000600030001-1

Approved For Release 2003/02/27 : CIA-RDP86B00269R000600030001-1

Communications. As noted earlier, control of communication is an important aspect of the Ambassadorial role we propose. Communications are the heart of "command and control"—for the Ambassador and DCM as much as for the military.

Embassy communications to and from the State Department and other agencies in Washington are sent by cable, by letter pouch and by phone. If the Ambassador is to be the representative of the President and agency personnel in the Embassy are extensions of him, it follows that he should have their communications available to him. (An exception is intelligence information relating to sources and methods.) This condition does not pertain in most Embassies. The Commission recommends that:

It should become accepted and standard operating procedure that communications to and from all Embassy personnel of all agencies be available to the Ambassador, either in advance or after dispatch, at his discretion.

Cable communications facilities for the diplomatic establishment, by which the bulk of secure messages are sent, are now handled technically and cryptographically by another agency. The Commission sees no way of defending this arrangement. It arose in the mid-1960s, when improved equipment required a sizeable outlay of funds the State Department was unable or unwilling to seek. The effect of this transfer of responsibility, especially the cryptographic, is that the Ambassador, except by utilization of special and inefficient devices, does not have privacy of his communications. The Commission strongly recommends that:

Control of diplomatic cryptographic facilities be fully in the hands of the Department of State.

Improved Foreign Service Reporting. At the heart of the Embassy's role in the years ahead, particularly in its part in the assessment function, is the quality of its reporting. We agree with Secretary of State Kissinger that:

"It is absolutely imperative not just to report what people say but to explain what people mean, not just to describe how a situation looks but to try to lay out what the trends are, what can be expected, and to do so not on the basis of some sentimental proclivities but on the basis of a hardheaded—if necessary cold blooded—analysis of what the various alternatives are that the situation requires."*

A comprehensive study of Foreign Service reporting prepared for the Commission* identifies the gap between current performance and what is required for adequate foreign assessment. It notes as the central problem in current reporting, the absence of overall direction and guidance on the information needed and cites the general lack of communication between the field and the mission on this activity. More explicitly, this report concludes:

a. Foreign Service reporting must serve many disparate users—State Department senior officials, policy planners, geographic bureaus and country directors, functional officials, intelligence analysts, and other agencies (Commerce, Defense, National Science Foundation, etc.)

b. Foreign Service reporting is not now consciously designed to meet the needs of any one of these users, and therefore satisfies none of them completely and some of them not at all.

c. If Foreign Service reporting is to be more responsive to a wider range of users, it will be necessary to identify more clearly these different consumers and their needs and then quite directly seek to meet them. This internal problem means establishing more clearly different forms of reports which have differing content, format, and analysts to meet specific needs of different users.

d. If Foreign Service reporting is to be realigned to meet this concept, it will almost certainly need unified direction which does not now exist.

We would add a further and quite fundamental conclusion: to fulfill the requirement for high quality and specialized analysis and assessment, Foreign Service Officers must possess and/or be trained in analytic disciplines to a far more expert degree than at present.

On the basis of these conclusions, in which the Commission concurs, we believe the following steps are required.

*The Under Secretary of State for Management should be assigned direct authority for communications, including Foreign Service reporting, and should establish a staff to carry out this responsibility. This staff should take the lead—with the collaboration of the Bureau of Intelligence and Research (INR), the Regional Bureaus, the Foreign Affairs Institute (FAI)** and the Executive Secretariat—in making the Embassy communications system and particularly Foreign Service reporting more effective in scope, content and form. In so doing it will need to make systematic studies of needs of the many disparate users—starting with the President and Secretary—of Foreign Service reporting, and communications generally, and to devise ways for fulfilling those needs.*

*Henry Kissinger Speech to American Foreign Service Association, November 11, 1974.

*The "Assessment of Foreign Service Reporting" is printed in its entirety as Appendix E to the report of the Commission.

**See Chapter 12 for recommendation on converting the Foreign Service Institute to a Foreign Affairs Institute.

Approved For Release 2003/02/27 : CIA-RDP86B00269R000600030001-1

Approved For Release 2003/02/27 : CIA-RDP86B00269R000600030001-1

INR should work actively with such a Foreign Service Reporting Staff, to relate Foreign Service reporting effectively to the needs of the intelligence community, and should be staffed adequately to fulfill this role.

The Foreign Affairs Institute, in coordination with the Foreign Service Reporting Staff, should significantly improve its course offerings and in-service university enrollments to train officers to fulfill the assessment role in Foreign Service reporting. (A number of other personnel system changes which would be necessary to improve the foreign assessment capability of the Department of State and the Foreign Service are developed in Chapter 12 of this report, on personnel.)

At many posts abroad, political and economic sections in the Embassies should be merged. Integrated, comprehensive reporting and assessment which considers economic and politiical issues in their close relationship are what we believe will be most needed; a combined section would enhance the likelihood of it being produced. It would also help to encourage FSO's serving abroad to pay more attention to the economic aspects of our bilateral relations.

Quite apart from Foreign Service reporting, the Commission notes that agencies in the field outside the Department of State are called upon by their headquarters to report on political and economic matters pertaining to the host country. Moreover, these reports—sometimes submitted on a regular, periodic basis—are very often unavailable to the Ambassador. In many cases, such reporting and collection efforts are redundant, and their elimination may result in reduction in the number of agency personnel needed.

Mission Organization. The foregoing discussion of the Ambassador-DCM relationship and the recommendation that some Political and Economic Sections be merged begin to suggest the pattern of organization needed to equip the mission to adapt to its changing role.

More specialized needs suggest that a number of departments and agencies will continue to have representation abroad on a permanent or at least a temporary basis. This condition should be accepted where this is the most practical and efficient means for carrying out essential functions. The stipulation concerning communications noted above is critical. Moreover:

The Ambassador should have a full opportunity to comment on any change in the staff complement [illegible] and his word should carry great weight even if it is not the determining factor.

The Commission believes that the Ambassador now has too limited an influence on the size of agency representations; if he is to be held responsible for the performance of his mission, as he should be, he must have a greater role in determining its size and composition. This principle will require firm support from the Secretary of State, OMB, and in the final analysis from the President. Assignment of senior agency representatives should also be subject to the Ambassador's review. He should retain the authority he presently has to remove anyone on the Embassy staff if he believes this to be in the best interest of the United States.

Particularly at a time when the size of operating programs is being reduced in many countries, the State Department for both economy and managerial control should incorporate in one overall structure support activities for those remaining. Allowances, perquisites and personnel policies should be rigorously regularized. We recommend that:

The Department of State should provide managerial and administrative services for the entire mission.

The organization of each embassy will of course vary depending on the post and its specific needs, but it should always reflect both ambassadorial primacy and his right to be informed; it should operate as one mission in an integrated fashion, rather than as a series of loosely associated independent offices.

The Field-Washington Linkage. It is ironic that at a time when communications and travel are so much easier than in the past, a chronic complaint of officers both in field missions and in Washington is that they are often out of tune with each other's thinking. This linkage is crucial if U.S. interests are to be effectively represented abroad, and conversely, if the reporting done in the field is to provide information for policymakers in a timely and usable fashion. An effective policy is simply impossible if the policymaking functions are not closely linked with information sources on the one hand and implementation agents on the other.

The Commission therefore believes that it is false economy to restrict unduly travel between the field and Washington.

Ambassadors should frequently consult in the Department of State and elsewhere in Washington, perhaps several times a year in addition to leave, depending on specific needs. On a somewhat less frequent basis, DCMs and section heads should come to Washington for consultation, and, conversely, Country Directors, Deputy Assistant Secretaries, and Assistant Secretaries of geographic bureaus should spend a substantial portion of their time in the field. The Department [illegible] Congressional response to them, should reflect this need.

Approved For Release 2003/02/27 : CIA-RDP86B00269R000600030001-1

Approved For Release 2003/02/27 : CIA-RDP86B00269R000600030001-1

Serving a similar purpose, but designed to enhance development of a regional perspective in addition to a bilateral one, the Commission recommends that:

Regional conferences of key personnel from Washington and the various missions should be held more frequently than the current chiefs of mission conferences.

These conferences could be held both in Washington and at various locations in the region, and focused not only on general relations but on specific topics of mutual interest. Particularly in situations where countries in a region are antagonistic, and where U.S. missions are likely to reflect very different recommendations on a purely bilateral basis, such conferences can help to encourage close mission-to-mission coordination in policy development. The regional affairs offices of each geographic bureau should be given responsibility for developing and staffing these meetings.

Country Directors in the geographic bureaus have been reasonably effective in meeting the needs of Ambassadors. More steps should be taken, however, to enable the Country Directors to be the Washington focal point for country-related activity for the whole government. The Country Director cannot command other agencies, but he should know what their interests and proposed activities are, and working closely with the Ambassadors, promote and guide reconciliation of individual agency activities with overall policy toward the country. Country Directors should also play an important role in the foreign assessment function, by providing frequent commentary on information most needed, and the atmosphere in Washington. It goes without saying that to perform effectively, the Country Director must be privy to all available information about U.S. relations with his country, and should not be excluded from the development of policy initiatives. It is the Country Director, for most countries, who is the only official in Washington in a position to inject accurate foreign assessment considerations into policymaking. If he is excluded or cut off from information he cannot perform this role effectively and policy will suffer.

Mission organization should reflect a balance between flexibility and stability, and should be reviewed periodically to insure that it is in line with current requirements. Unique patterns and practices such as bilateral joint commissions (as suggested below) should be employed when appropriate. At the same time, the Commission is skeptical about the desirability of employing radical organizational arrangements in the absence of a strong presumption that they would produce better results. Thus we have examined and rejected such proposals as widespread accrediting of one Ambassador to several countries, preference instead greater differentiation in Ambassadorial ranks because we believe the senior representative permanently based in a country should have Ambassadorial authority; the assignment of more than one ambassador to the larger countries with duties divided functionally; and the idea of permanent ambassadorial "teams" based in Washington and sent to the field to deal with specific issues. At times, each of these approaches might be useful; but none of them commends itself as normal practice. The guiding principle for mission organization in the future should be appropriateness for the tasks at hand; neither innovation for the sake of novelty nor standardization for the sake of convenience should be allowed to distort the overarching need to match structure and procedure with the job to be done.

Inspection and Overseas Operations. The Commission applauds efforts made by the Department of State in the past few years to extend the inspections of field posts to "the conduct of relations," thus encompassing both the field posts and the country directorate in Washington, and the substance of policy as well as purely administrative and personnel practices. U.S. overseas programs and policies in a country are difficult to coordinate from Washington, and the authority of the Ambassador is not always sufficient to insure success in coordinating programs in the field. A positive mechanism to assist in these efforts is needed. The Commission, therefore, recommends that:

The Office of the Inspector General of the Foreign Affairs, be mandated to inspect the overseas activities of all U.S. agencies associated with Embassies and Consulates, in addition to those of the Department of State.

This change will require additional inspectors, who should be drawn from the agencies involved, supplementing those from the Foreign Service and the Department of State. Reports of inspections should be made to the heads of concerned agencies as well as the Secretary of State. In keeping with the policy monitoring role of the Department of State, which would reflect Presidential authority, the expanded Inspector General's office should be guided by a presidential viewpoint.

Bilateral Joint Commissions and Boards. Following a practice of dealing through joint commissions and boards in relations with a number of countries, including Canada, Japan and Korea, and after the institution of a comprehensive bilateral joint commission with the Soviet Union in 1972, this device has been employed with a number of other countries. The rationale for such commissions is to attempt to construct a web of cooperation in non-political, technical fields not normally associated with diplomatic concerns. Currently, a number of agencies and departments, including the Departments of State, Defense, Treasury, Commerce, Agriculture, HEW, Interior, Labor, and Transportation, OMB, NASA, FDA; EPA; TVA; OPIC; and the National Endowment for the Humanities are participating in one

Approved For Release 2003/02/27 : CIA-RDP86B00269R000600030001-1

Approved For Release 2003/02/27 : CIA-RDP86B00269R000600030001-1

or more of these commissions, their supporting bodies, or Washington-based planning and coordination efforts. Attempts have also been made to involve the private sector in the United States, including the business, science, and university communities.

The Commission believes that selective use of these joint commissions can augment traditional means of conducting bilateral relations, especially in situations where an instrument which can be tailored to a very specific set of needs is required. By building a network of relationships in matters of mutual interest, they may serve to contain differences and to help develop a common perspective and stake in resolving them. But their desirability, effectiveness and prestige probably are inversely proportionate to their number. Management of these Commissions presents considerable difficulty, since each is unique in its purpose, membership, scope, and its relationship to overall relations between the two countries. We therefore suggest that Bilateral Joint Commissions should be limited to special or selective U.S. objectives and situtions in which they are likely to be more effective than normal diplomatic channels.

MULTILATERAL DIPLOMACY AND GLOBAL ISSUES*

Many of the decisions affecting the destiny of the United States and its people are now reached in multilateral negotiations. Greater interdependence among nations and the increasing need for multilateral diplomacy, both to deal with interdependence issues and as an economizing measure in a world made up of 150 nations, will be important characteristics of future foreign policy. Among the problems increasingly handled in multilateral forums are peacekeeping, nuclear safeguards, and the policing of terrorism; planetary bargaining on energy, food, population, commodities, trade, and aid; the control of weather; the allocation of frequencies and orbital arcs in space; the regulation of international business and monetary flows; and the management of ocean resources.

This great increase in the range of issues dealt with through international organizations will be accompanied by the presence of an ever larger number of such organizations. In addition to general purpose organizations such as the United Nations, and regional groupings such as the Organization of American States, a large number of special purpose agencies are coming into existence. Some are created under the aegis of the United Nations, such as the Conference on Trade and Development; some are agencies associated with the United Nations, such as the Food and Agricultural Organization and the International Monetary Fund. Some are wholly independent of the UN, such as the Organization for Economic Cooperation and Development and the newly created International Energy Agency. Others are U.N. sponsored conferences and special negotiating groups, such as the Disarmament Conference in Geneva and the Law of the Sea Conference. Finally, a wide range of less structured groupings assembled to deal with energy and other specific problems are coming into existence. Merely keeping abreast of developments in all of these bodies is difficult; using them effectively to further U.S. interests, and the cause of world order, will be even more so.

It does not follow that all problems of interdependence, or all problems involving more than two states, must necessarily be resolved through multilateral institutions. The United States must decide on a case by case basis when it is advantageous to use multilateral channels, when bilateral relations should be stressed, and when the latter can be used to facilitate the former.

When multilateral diplomacy is appropriate, greater attention should be given to diminishing the possibilities of conflict and increasing the likelihood that a problem-oriented consensus can emerge. Weighted voting which reflects the real interests of the states involved is one possibility, particularly for new organizations with special functions. The use of working groups made up of countries having a direct interest in certain issues, rather than the full membership of a general purpose organization is another. Though such arrangements may be difficult to achieve, their use could enhance the possibility of responsible outcomes.

Another means of making multilateral organizations more useful is to help make them more effective and efficient in operation. The U.S. Government should do what it can to see that better qualified people are made available to manage the programs of international organizations. A related step would be to encourage the recruitment of U.S. citizens for the staffs of these organizations, which would have the added virtue of helping the United States perspective on important issues to be better understood.

In [illegible] of multilateral organizations and our relationships to them, the Commission recommends (as first proposed

* This section draws upon a study prepared for the Commission under the direction of Joseph S. Nye and Robert Keohane on "Organizing for Global Environmental and Resource Interdependence," and on papers on "The Management of Multilateralism," by Harlan Cleveland, "Foreign Policymaking in a New Era—the Challenge of Multilateral Diplomacy," by Richard N. Gardner, and "Conduct of Multilateral Diplomacy in the United States Government," by Charles W. Yost, all of which were prepared at the request of the Commission. These materials may be found in Appendices [illegible]. An informal paper by N. A. Pelcovits was also helpful in the Commission's work on this topic.

Approved For Release 2003/02/27 : CIA-RDP86B00269R000600030001-1

Approved For Release 2003/02/27 : CIA-RDP86B00269R000600030001-1

by the Lodge Commission*, on the 25th Anniversary of the United Nations) that:

Each incoming administration should create a nonpartisan commission, including representatives of the Congress, charged with reassessing on a broad front U.S. participation in multilateral agencies and programs, and recommending changes in our policies and programs as necessary.

The Conduct of Multilateral Diplomacy. Multilateral diplomacy is one instrument of U.S. foreign policy, representing a distinctive channel and method of operation. Because it involves the responsibilities and concerns of an increasing number of U.S. departments and agencies, multilateral diplomacy cannot be regarded as within the sole purview of any single department or bureau. Nor can multilateral diplomacy be treated in isolation from other ways of carrying out policy, and it is highly desirable not to approach participation in an international organization on important substantive issues from the perspective of an agency committed to that organization primarily for its own sake. Finally, foreign affairs management is now heavily weighted toward the advancement of bilateral relations with other nations, and if both kinds of diplomacy are to be used effectively, our multilateral capabilities must be enhanced.

We believe that this reasoning suggests an organizing principle; namely, that pursuing U.S. interests in multilateral forums must be the responsibility of all governmental units with a stake in the issues taken up in such forums, and not simply of one central office or department. Some major and essentially political issues, such as peacekeeping, will need to be handled in a bureau primarily concerned with the United Nations. But others, including some of a political and security nature (e.g., Mutual and Balanced Force Reduction) and especially technical problems (e.g., oceans and energy matters) can be best pursued by those who are not principally concerned with promoting multilateral institutions.

Traditionally, the Department of State has been regarded as the agency that should coordinate foreign policy throughout the Government, although observers have repeatedly lamented its failure to do so effectively. As a multitude of agencies become increasingly involved in foreign policy, with high-ranking officials taking an interest, it becomes even more difficult for officials at the Assistant Secretary or Deputy Assistant Secretary level in the State Department to influence, let alone coordinate actions of other agencies.

The Commission believes that the White House and State Department must therefore collaborate closely to develop policy and to coordinate the activities of various operating agencies. To play its proper role in this process, however, the State Department will need a major internal transformation. Our approach to this problem is described in Chapter 4.

United Nations Affairs. The Bureau of International Organization Affairs (IO), is currently characterized by inadequate staffing, limited influence, largely mechanical responsibilities, and a relatively small policy role. These current weaknesses, coupled with our belief that it is impossible for any one organizational unit or bureau to take the lead with respect to all multilateral issues, and the growing multilateral importance of issues which are the responsibility of functional bureaus of the department lead us to recommend that:

The Bureau of International Organization Affairs (IO) should be reconstituted as a smaller Bureau for United Nation Affairs, serving primarily as a Washington point of reference for U.S. missions in New York and Genera, and responsible for international organization budgetary contributions and international conference support. IO's policymaking functions should be allocated to functional bureaus for the relevant issue areas, and through them, to the functional Under Secretaries. Responsibility for arranging international Conferences might go to the Under Secretary for management.

This change should not be seen as indicating any desire on the part of the Commission to downgrade the role of international organizations. On the contrary, we believe that international organizations are sufficiently important for United States policy that all of the functional bureaus of the Department of State must take them continuously into account.

The analogy of the evolution of multinational business enterprises may be helpful here. When these firms first become involved in world business, they usually establish international divisions. But after a certain point is passed—after they have become heavily multinationalized—the international division is generally dropped in favor of an organizational structure that gives the whole firm an international orientation. In the same way, as dealing with multinational forums loses its exotic character and becomes a customary way of doing diplomatic business, a special Bureau is no longer required, except to provide limited support functions, such as planning for the organization's future, developing budgets (contributions as well as U.S. mission support), evaluation of performance, and providing a repository of information and experience about the organization's past and current history.

*The President's Commission on the Observance of the 25th Anniversary of the United Nations, Henry Cabot Lodge, Chairman. Report submitted to the President on April 26, 1971 (Washington Government Printing Office, 1971).

Approved For Release 2003/02/27 : CIA-RDP86B00269R000600030001-1

Approved For Release 2003/02/27 : CIA-RDP86B00269R000600030001-1

Coordination and Consistency in Multilateral Forums. Any system of State Department organization, including the one proposed, will need to provide procedures ensuring consistency among United States policies advanced in various international agencies. The fact that the U.S. Government has been officially represented in more than 700 international conferences in each recent year, underscores the magnitude of this problem. IO is not well-situated to perform this function. Since many of the economic, scientific, and technical issues which will concern of the United States in the future will necessarily involve multilateral organizations and relations, we recommend that:

The multilateral policy function for such issues of global interdependence should be allocated to the Under Secretary for Economic and Scientific Affairs. The policy function for political or military multilateral issues, such as peacekeeping, should be assigned to the new Under Secretary for Political and Security Affairs.

Collectively, the Under Secretaries would be concerned with the consistency of our policy and practice in different international organizations; and would work accordingly with the agencies involved. They would also attempt to consider how issues, and U.S. policies on them, relate to one another, and how to avoid excessive fragmentation of policy. One important device designed to focus attention on multilateral issues would be the development of the Critical List described in the section of this report concerned with policy planning. (Chapter 10)

Another device which may be appropriate is the use of special purpose advisory groups and consultants as an adjunct to government resources when preparing for specific negotiations in multilateral forums. Whether the issue is trade, seabed and ocean problems, or food and population, such groups can provide broader views on the issues involved and help generate widespread support for the policy agreed upon.

The outcome of the proposed reorganization would be a streamlined system, much more responsive to functionally-based issues and better able to coordinate strategies toward international organizations. This system would be directed not at advocacy of multilateralism in the abstract, but at better planning and more sophisticated attention to multilateral options, increasing the likelihood of outcomes being responsive to U.S. interests. The activities of the regional bureaus of the Department would remain unimpaired. Indeed, they should benefit from the early warnings and expert advice that functionally-oriented bureaus could provide. Policy toward international organizations would be built into the relevant functionally-defined bureaus.

The foregoing structure and organization reflect our view that the time has passed when the State Department—whether through an International Organization Affairs Bureau, its geographic bureaus, or as a whole—can manage by itself those issues likely to be conducted through multilateral organizations. Multilateralism is not a specialty reserved for one group or office in government, but a matter for much broader concern.

Both in Washington and in the field, experts must be on hand to deal with such subjects as food, population, energy and the environment; thus other agencies must be intimately involved in the diplomatic effort. Moreover, because of the nature of the subjects involved, there must be close links between the State Department and the White House. In this system, representatives of State would ensure that the U.S. diplomatic posture is consistent with respect to these issues to be handled in multilateral institutions, but would normally rely on others in the Government to provide specific substantive expertise.

Transgovernmental Relations. Transgovernmental policy coordination—direct contacts among officials of technical agencies of different governments, working together as an adjunct to or in addition to formal international negotiations to find solutions to joint problems—will be essential to effective management of complex issues of interdependence. The State Department and particularly the office of the Under Secretary for Economic and Scientific Affairs should encourage constructive transgovernmental contacts of this type.

At the same time, such transgovernmental coordination bears watching, since it may shade over into the construction of coalitions among like-minded agencies in various countries against other elements of their own governments. If separate agencies—for example those concerned with drug control, ocean use, or monetary policies—not only coordinate policies directly with their counterparts in other countries, but adopt their own independent foreign policies through informal alignments, the prospect of achieving a rational synthesis for American policy a whole is seriously impaired. Close monitoring by the State Department and the White House is important to avoid these disadvantages inherent in transgovernmental contacts, while preserving their advantages for decentralized problem-solving. A bureaucratic context which provides this capability and which encourages operating agencies to take a broader view than their own functional concerns, as we have suggested above, is essential.

Delegations to Multilateral Organizations and Conferences

The Commission recommends that

In most policy areas the Department of State should select the heads of delegations for multilateral negotiations, seeking the best qualified individuals in or out of government.

Approved For Release 2003/02/27 : CIA-RDP86B00269R000600030001-1

Approved For Release 2003/02/27 : CIA-RDP86B00269R000600030001-1

This responsibility is particularly appropriate given the overall coordinating role of the Under Secretaries of the Department. In some instances, Ambassadors-at-large might be assigned specific responsibility for managing complex, long-term negotiations. In particularly important or technically difficult negotiations, however, an explicit designee of the White House or of one of the technical agencies might usefully be appointed, with a representative from the State Department as the Deputy.

As a general principle in deciding upon representation on multilateral delegations, we recommend that the United States should look not only to the nature of U.S. resources involved, but toward the purposes of multilateral negotiation and participation in organizing delegations. For example, United States representation to the World Bank and regional development banks should reflect not only the Treasury Department's financial perspectives, but also and more vigorously than has sometimes been the case, those of the State Department for general policy coniderations, and of the Agency for International Development, since the purpose of these international lending institutions is to promote development.

An additional complicating factor is that discussions in international organizations may raise issues that U.S. officials have not considered, or reveal new perspectives from which problems may be viewed. It is important that the U.S. Government be so structured that agencies dealing with a particular set of issues are sensitive to the views of other governments. This implies that U.S. delegations to international conferences and policymakers at home need to be both politically and technically sophisticated, and that there be close cooperation between technical, operating agencies of the Government on the one hand and the Department of State on the other. It also implies that strict quality controls should be applied to delegate selection, and that delegates to the UN General Assembly and similar meetings should be chosen on the basis of merit and not for political reward.

Related to delegation composition is the need to coordinate policy and to provide administrative and budget support in a way which will assure accountability and responsiveness to government-wide interests. Currently, such services are provided by the Department of State, and the Commission recommends that this pattern should continue in those cases where State is the lead agency in a delegation. In other instances, it may prove more efficacious to have the major agency involved fill this role.

Staffing Permanent Missions. In general, the Commission recommends:

Staffing for permanent missions should be accomplished through both the Foreign Service and Civil Service systems. Assignment, training, and promotion practices should be devised which (a) develop a measure of expertise in multilateral diplomacy without creating a separate core of specialists, and (b) permit wide flexibility to utilize substantive specialists from many agencies.

Staffing permanent U.S. missions to international organizations is likely to become increasingly difficult. Given the involvement of many additional agencies, these missions will be increasingly called upon to provide support for visiting experts engaged in specific negotiations in many fields. Moreover, they will have to monitor the proceedings and make sure that the positions of technical specialists and agency representatives are consistent with overall U.S. policy. The Commission regards these duties as particularly important and believes that the Foreign Service should place a career premium on such assignments in order to attract to them particularly able, broad gauged people. These functions will be particularly important at the U.S. Mission to the European Office of the U.N. and Other International Organizations. In some cases, assignments to multilateral posts should offer special perquisites and opportunities for advancement.

At the same time, the Commission recommends that Multilateral organization affairs should not be the exclusive domain of a specialized group within the career service. Such a "cone" of officers would lack both the breadth and the technical competence required for dealing with the complex issues involved. But careers heavily weighted toward multilateral diplomacy should not be regarded as exceptional. The traditional political orientation of State Department country specialists is clearly inadequate for these requirements. Broader training and a greater mix of specialized talents is essential for the conduct of multilateral diplomacy. For example, as an increasing portion of the work of the U.N. is focussed on economics and other specialized matters, the skill levels and competence of the staff of the U.S. Mission to the United Nations must reflect these new requirements. The same is obviously true for our OECD and European Community missions. Exchange tours between Foreign Service Officers dealing with multilateral diplomacy and representatives of technical agencies increasingly involved in multilateral issues would be a useful corrective to the possible parochialism of each group.

Finally, the Commission recommends that:

The head of the U.S. delegation to the U.N. should be a prominent personage with a close relationship to the President, and should hold Cabinet rank.

The Commission believes that Congress must be increasingly involved in precisely those issues of a global nature which find their way into multilateral organizations, since these mat-

Approved For Release 2003/02/27 : CIA-RDP86B00269R000600030001-1

Approved For Release 2003/02/27 : CIA-RDP86B00269R000600030001-1

ters of interdependence are weighted so heavily with domestic consequences. Congress will have to make sure that many issues traditionally considered the purview of domestic committees are also assessed for their foreign policy ramifications. This may require joint staff work between foreign affairs and domestic committees, and in some cases joint referral and possibly joint hearings.

The executive branch should be more sensitive to the interests of Congress in multilateral diplomacy. Congress should be seen as an important participant with legitimate interests in the multilateral arena. The Commission strongly recommends:

> *The appointment of Members of Congress to international delegations whenever feasible, as a particularly useful way of keeping Congress involved and informed about multilateral foreign policy issues.*

Even if they are not normally invited as voting delegates, Members of Congress can strengthen the delegation by providing congressional perspectives to supplement those of executive branch representatives.

In conclusion, the Commission believes that the choice which confronts the U.S. is not whether to participate in a variety of multilateral institutions, for that is unavoidable. Rather it is whether to exercise vigorous leadership in endeavoring to strengthen them so that they are better equipped to service U.S. interests in bearing the burdens of international interdependence and building world order, or to use them in a routine way with a minimum of conviction. The current mood of the country is skeptical about many international organizations, and may well become more so as our influence in them weakens. Therefore, it will be especially important for policymakers to decide when our national interests are best served by their use, and to explain their continuing importance to our policies in a way which will preserve necessary domestic and Congressional support. To fail to do so would divert us from the fundamentally important goal of building an international order and machinery capable of managing mankind's common problems.

PUBLIC DIPLOMACY

As we have noted elsewhere in this report, American foreign policy in the future will be required to operate in a different environment than existed in the post-war period in which most of the organizational arrangements still in use first evolved. In the 1950s and 1960s, many of the nations of the non-communist world depended heavily on the economic and military power of the U.S. [illegible] was correspondingly great. The hallmark of the next decade or two—as indeed it is a characteristic of the current day—will be the existence of many centers of economic and military power, loosely connected by ties of common interest and common values.

In such an environment, with the U.S. interdependent with others, and the others no longer grouped in tight alliance with the U.S., the ability of this country to make its views prevail and its policies succeed will derive less from its wealth and power, and more from such respect and support as the rest of the world accords to its values and purposes.

Moreover, just as the bi-polar world of the post-war period has given way to a greater dispersion of power among a large number of nations, so power and authority have undergone dispersion within states. International relations are increasingly affected by the way in which events and actions of governments throughout the world are viewed by citizens, not simply by officials. Although diplomatic relations are undertaken with and through foreign governments, greater popular concern with issues of foreign relations make it important that broad segments of foreign populations understand and support U.S. policies and purposes.

It is in that light that we turn to the problem of the organization of the government for the conduct of cultural and information programs, known collectively as "public diplomacy." These programs have two purposes:

—The projection, interpretation and advocacy of current U.S. foreign policies abroad; and

—The portrayal abroad of American society as a complex, pluralistic, tolerant and democratic community.

Distribution abroad of the text of a press conference or policy speech by a U.S. official serves the first function. American libraries and bi-national centers abroad, presentation of American performing arts, English language classes, and student exchanges, academic travel grants, lectures and seminars serve the second. Other activities of the printed and electronic media partake sometimes of policy projection and sometimes of culture communication. Even here, however, it is generally possible to distinguish by purpose the magazine articles and the radio broadcasts of longer or general character from the "fast media" associated with the news and policy commentary.

The twin tasks of explaining U.S. foreign policy and of conducting educational and cultural activities abroad are presently each split between the State Department and the U.S. Information Agency (USIA). The State Department, through its press officers in Washington and its political and economic officers in embassies and missions abroad, sets forth and explains current foreign policy. In addi- [illegible] Educational Exchange programs seek to portray American society. Through its media officers and its library

Approved For Release 2003/02/27 : CIA-RDP86B00269R000600030001-1

Approved For Release 2003/02/27 : CIA-RDP86B00269R000600030001-1

and language services. USIA also projects current American policy and also seeks to portray the American scene. The Voice of America, now part of the USIA, communicates directly by radio with the peoples of the world; presenting official U.S. policies and commentary, and projecting American thought. All three agencies, therefore, participate separately in both foreign policy and cultural affairs. Moreover, in present practice, USIA officials in the field receive instructions from both the State Department and USIA. The VOA receives its policy guidance from the State Department filtered through the USIA.

The result, we believe, is that neither foreign policy advocacy nor the building of long-range understanding between the U.S. and other nations is now being handled with full effectiveness. The Commission concludes, therefore, a realignment of responsibilities is needed.

Our recommendations are that the advocacy function be placed in the State Department alongside the responsibility for policy itself, and that the longer range functions of cultural communication and general information—in media, in exchange of persons, in cultural presentations—be combined in a single agency separate from but responsible to the State Department. This is how most other countries meet the same or similar needs; we believe it will prove appropriate and more effective here as well.

In arriving at these conclusions the Commission has had the benefit of a comprehensive review undertaken by the Panel on International Information, Education, and Cultural Relations under the Chairmanship of Dr. Frank Stanton.* The following recommendations coincide with the Stanton Panel findings.

The Spokesman Role

Programs which project and explain U.S. foreign policy, now split between the State Department and USIA, should be combined in a new State Department Office of Policy Information.

This change makes the direct support of U.S. foreign policy through advocacy and interpretation the clear and sole responsibility of the Department of State, to be carried out by officers of the Department itself and by the political and economic sections of the embassy under direction of the Department.

The objections to this proposal which have been heard are of three kinds. Some find unwelcome the fragmentation of information programs, believing that the articulation and advocacy of policy is inseparable from other press and media activity and, moreover, should not be undertaken by those conducting foreign policy. Others believe the State Department, oriented as it is in its press relations primarily to domestic U.S. audiences, will be unable to fulfill satisfactorily this aspect of the information role. Still others claim the application of this realignment of functions in embassies would prove unworkable on the grounds of an inseparability of press relations for policy and for longer range, cultural communication. The Commission does not find these objections convincing, and believes that the Panel's recommendations will be fully sustained in operation.

The logic of holding the senior State Department officers in Washington responsible for those information activities and press relations which directly concern the interpretations of foreign policy appears particularly strong; linking the process of formulation of policy to the responsibility for its advocacy and interpretation should improve the quality of both.

Some doubts arose concerning the application of the principle to embassy activities. After careful review, however, we find ourselves in agreement that the policy interpretation aspects of press relations could and should be handled by press officers closely integrated with the political and economic side of the Embassy under instructions from the Department, not from a separate information and cultural affairs agency. The Ambassador and his Deputy Chief of Mission will be fully capable of coordinating this activity with the related but separate function of media relations involved in the cultural section of the embassy. Under this arrangement, the Public Affairs Officer's position becomes unnessary and should be abolished.

The Cultural and General Information Role

All general (non-policy) information and cultural activities which are now carried out by the Department of State or the U.S. Information Agency, other than those of the VOA, should be combinded in a new semi-autonomous (or associated) Information and Cultural Affairs Agency (ICA). The ICA Director would report to the Secretary of State, or alternatively, if the President wishes, the Director could report directly to the President while receiving day-to-day policy guidance from the Secretary of State.

The need to combine these functions in one agency is almost universally accepted. The principal differences arise over whether the combined agency should be fully independent, fully integrated into the State Department, or placed in some intermediate status. The [illegible] Panel foresees difficulties with either a full integration into, or a full separation from, the State Depart-

* The Panel was a privately funded Commission, organized by Georgetown University's Center for Strategic and Int[illegible] jointly by the U.S. Advisory Commission on Information and the U.S. Advisory Commission on International Education and Cultural Affairs.

Approved For Release 2003/02/27 : CIA-RDP86B00269R000600030001-1

Approved For Release 2003/02/27 : CIA-RDP86B00269R000600030001-1

ment. It believes that these are largely avoided if the cultural and general informational functions are placed in an autonomous agency under the policy guidance of the Secretary of State, having a working relationship with State comparable to that of Arms Control and Disarmament Agency (ACDA). The problem of adequate funding has given us some concern. On balance, however, the Commission believes an ICA agency having such a relationship to the State Department would stand as good a chance of receiving adequate financial support as it would in its present, fully independent, state.

The Voice of America

The Voice of America should be set up as an independent federal agency under a Board of Governors, with a mandate to broadcast accurate, objective, and comprehensive news as well as to represent American society in its totality, and with the State Department responsible for that portion of its programming which presents or explains U.S. foreign policy.

The VOA presented a harder dilemma. It necessarily serves both the major functions of public diplomacy but it cannot be split down the middle. It must present U.S. policy and it should reflect American culture and society. In addition, however, it must be a source of news—comprehensive and authoritative enough to gain attention and respect in all parts of the world. Standing "at the intersection of journalism and diplomacy," the Voice has to steer the perilous course between independence on the one hand and adherence to U.S. policy on the other. No organizational formula can fully satisfy these requirements. The Commission finds the recommended plan to be the most acceptable. Full integration within the Department of State would take it too far from its important journalistic missions; it would have great difficulty in winning a substantial listener audience. Alternatively, giving the Voice a total independence would make it simply another private radio station. Putting it under the proposed ICA would invite the worst of both worlds, neither direct guidance nor full freedom. An agency under a mixed Board of government and non-government members appears to us to offer the best solution.

Even with this formula many would be concerned about the distance of VOA from policy control where policy is importantly at stake. But the Commission is impressed with the suggestion that the problem of policy commentary—the function where guidance really matters—might be resolved by the simple device of having State Department officials placed within VOA directly [illegible] which presented or explained U.S. foreign policy positions.

Approved For Release 2003/02/27 : CIA-RDP86B00269R000600030001-1

In the personnel area, the Stanton Panel suggests that it would be desirable to absorb USIA's FSIO service into the State Department's FSO Corps. The Commission disagrees with this finding for reasons which are developed in the Personnel section of the Report. (Chapter 12) Instead it recommends that the FSIO Corps maintain its separate structure, albeit closely aligned to the Foreign Service. Throughout this report the Commission emphasizes the need to bring a new focus to the work of the State Department and the core operations of the Foreign Service. Accordingly, emphasis should be placed on the role of assessment and bilateral government-to-government communication. Specialized programs, with fully as much emphasis as heretofore, should be placed more directly in the hands of the responsible agencies and their own field representatives. Consistent with this concept, we believe a professional corps of media specialists and those expert in cultural communication should be maintained as a separate entity, though linked closely to other elements of the foreign affairs personnel system, and particularly the Foreign Service.

Separate Advisory Commissions now exist for the U.S. Information and Cultural Activities. Over the years these Commissions have served a useful purpose in evaluating the work of our government in the cultural and information fields and making appropriate recommendations for improvements. The Stanton Panel recommends that the two Commissions now be discontinued and in their stead Congress create a single Advisory Commission on International Information and Cultural Affairs. The Commission strongly endorses this proposal.

Approved For Release 2003/02/27 : CIA-RDP86B00269R000600030001-1

CHAPTER 10

PLANNING FOR FOREIGN POLICY

In a rapidly changing, interdependent world, foreign policy to be effective must achieve coherence over time. Shaping an international order or managing interdependence will be possible only by actions which reinforce each other over an extended period. While it remains adaptable to changing conditions, policy must therefore serve consciously developed long-term goals and priorities.

The processes and institutions for making and carrying out foreign policy thus face a multiple challenge: *

—To identify future trends and developments which, in the absence of action, would present major problems or missed opportunities;

—To define comprehensively and yet with precision the long-term purposes and the world-wide priorities of the U.S.;

—To assure that day-to-day decisions take account of the longer term priorities;

—To modify strategies and develop new courses in response to changing conditions and the outcomes of past actions.

The entire process of conducting foreign policy can be said to be directed at fulfilling these requirements. Experience shows, however, that those engaged in day-to-day operations, or those with limited jurisdictions, tend to neglect or resist these needs under the press of the demands of the moment. The reason for establishing planning or "strategic thinking" as a separate function is precisely to overcome this deficiency and to compensate for such tendencies in the system as a whole. We believe that planning in these terms has not been exploited to its full potential and that much greater attention to planning as a separate function will be necessary in the future.

As we use the term, planning comprises four major functions:

1. ***Strategic Concepts.*** Consistent policies over time must be built upon coherent definitions of long-term purposes and priorities, developed from a broad perspective of national interest. Such strategies need to be given the most careful articulation: they

* For fuller exposition of some of the ideas contained in this section, see the paper prepared for the Commission by Lincoln P. Bloomfield, "Organizing for Policy Planning," and comments by Robert R. Bowie, Chester L. Cooper, and Henry Owen. All are published separately in Appendix F.

Approved For Release 2003/02/27 : CIA-RDP86B00269R000600030001-1

Approved For Release 2003/02/27 : CIA-RDP86B00269R000600030001-1

form the basis for policymaking throughout the government and, in addition, they convey publicly the sense of purpose for the entire foreign affairs effort. The "State of the World Report," formerly prepared on an annual basis, was in many ways, this kind of statement of strategy. It was discontinued because the few officials who could conceptualize the full sweep of policy, including the Secretary of State himself, were too occupied with pressing operational demands. Planners should do the job.

2. ***Anticipation and Initiative.*** The shape of the future is influenced by the decisions of today. Short-term decisions, therefore, as well as long-term strategies must be informed by a sense of the long term movement of events. Planners must extrapolate from current trends the probable outline of future developments. They must also suggest ways in which the future can be modified. Department policy officers and diplomats, however, have as an important charge the maintenance of good and friendly relations with other countries. In this framework innovation and new directions of policy are often resisted. The President and the Secretary of State, if they are to affect the future, need planners, not encumbered with existing arrangements, to look at the future impact of current decisions, constantly to search for new directions and to suggest initiatives.
3. ***Review and Challenge.*** Operational officials tend to become advocates of the policies they have adopted. Policy inertia is an occupational hazard. Planners therefore, independent of policy responsibility, must take an adversary role, testing the rationale of decisions, questioning assumptions, checking data, asking whether full account has been taken of longer term objectives.
4. ***Reevaluation.*** However well informed in conception, however balanced in formulation, however deft in execution, policies still may fail. The ultimate test is not input but outcome; it is the test of events. Planners must observe the actual effects of policy, and reevaluate assumptions accordingly.

In examining the organization and procedures needed to fulfill those planning functions, we have been impressed by several considerations. In the first place planning activities have a close affinity to the intelligence function. Often it is difficult to see where one leaves off and the other begins. In at least one aspect of policy, the anticipation of the probable affects of alternative courses of action, the role of intelligence and the role of policy planning are indistinguishable. In general, both must look to the future: the processes of prediction, anticipation and forecasting are critical to both activities. For this reason we emphasize the need for the closest collaboration between the planners and the intelligence analysts, and for the attention of both to the development and use of improved forecasting and predictive techniques.

In the second place it is clear that planners must be insulated from operational tasks, but not isolated from operational realities. Organizationally this presents a dilemma. The history of planning staffs demonstrates that most influential planners have stayed close to operations, at some cost to the quality and independence of their planning. Planning staffs which have achieved full insulation from the drafting of next week's speech or tomorrow's cable have had little impact. A blend is needed.

Finally, the national and world trends frequently highlighted in this report—the interaction of domestic and foreign concerns, and the press of global issues such as food, population and energy—bring a major new dimension to the problem of organizing for planning in foreign affairs. Planners must move into a number of specialized fields as well as the more traditional foreign policy and national security areas. Moreover these trends and issues, more than political and national security subjects, cut more sharply across agency interests; planning has a government-wide dimension.

Mindful of these considerations, the Commission sets forth its recommendations in two parts: those which concern the *products* of policy planning and those which relate to the *organization* and structure of the government for planning.

PRODUCTS OF THE PLANNING PROCESS

The results of the planning process will be varied. In some cases, planners will argue alternative interpretations orally to senior policymakers. In others, they will prepare written memoranda or briefs, or be active participants in interagency exercises. In still others, they should develop extensive papers of an advocacy or forecasting nature, or introduce timely initiatives into policy development. All of these are appropriate to the planner's role. Adaptation to the particular needs is healthy, and an attempt to force planning products into a single framework would be counterproductive and sterile.

Two sorts of planning products, however, are of special importance. Neither is the exclusive responsibility of formal planning staffs, but both depend upon them for success. One is the periodic "State of the World Report"; the other, a "Global Systems Critical List."

"State of the World Report." We have suggested that an essential element of any effective system for the conduct of foreign policy is clear enunciation of national goals, priorities and interests, and of the current world situation in relation to them; that is, a strategic concept for foreign policy. We therefore strongly recommend that:

The practice of developing and making public a periodic Presidential "State of the World Report," be reintroduced.

Such a report could have a major impact in developing a policy consensus. The need for a new articulation of national purpose is strongly felt. Although a Presidential document, the strat-

Approved For Release 2003/02/27 : CIA-RDP86B00269R000600030001-1

Approved For Release 2003/02/27 : CIA-RDP86B00269R000600030001-1

egy should be developed under the leadership of the Secretary of State, who should assign its preparation to his planning staff, which in turn should draw upon the expertise of the many departments involved and especially on the NSC staff. It should have a strategic focus; a comprehensive statement of the nature of U.S. purposes, the structure of U.S. policies and the extent—and limits—of U.S. responsibilities in the world. It should also have an economic component. While a variety of schedules for preparation of such a report would be possible (annual, biennial) the Commission considers the best approach to be a major report during the first year of each new administration which would then be updated annually.

Global Systems Critical List.* The Commission believes that farsighted and comprehensive policy cannot be developed in the absence of a better awareness of both the possible catastrophic effects and the major new opportunities arising out of the uses of the world's physical resources and environment, and from new developments in science and technology. An authoritative inventory of these dangers and opportunities should be developed to alert both government and public to those problems which must receive prompt and intensive attention if serious long-term problems are to be avoided. Such an inventory would be an integral part of the "anticipation" role for policy planning. Since it should draw on the highest and most objective levels of scientific skill, and since it must be protected from political pressures, we believe that responsibility for the development and updating of such a listing should be jointly delegated by both branches of government to a prestigious and independent organization of scientists. Accordingly, we recommend that:

A "Global Systems Critical List of Problems and Opportunities" be authorized by act of Congress to be prepared by an organization such as the National Academy of Sciences.

Such a List should probably be organized in terms of specific areas—for example, ocean use, atmospheric degradation, or world food supplies—and the problems and opportunities ranked in importance, according to established criteria. The criteria would focus on the social and economic costs of adverse developments, or of opportunities foregone. Tentative findings might first be evaluated by a system of panels and then submitted by the Academy to the Congress and the President. We believe that relevant committees of the Congress might hold hearings. By resolution or otherwise the Congress could express its views on the Critical List.

Such a List should be revised periodically, the versions serving as a stimulus to the reordering of governmental priorities. The President, probably with the assistance of his principal science adviser, might prepare a "President's Report on the Global Systems Critical List"—an "impact statement"—which would indicate the Administration's estimate of how United States' interests are affected by developments included in the Critical List, and what the Administration proposed to do about them. The science adviser can also have a follow-up responsibility.

ORGANIZATION FOR PLANNING

Given the mixed success of foreign policy planning efforts in the past, conscious effort is needed to build a planning process which will facilitate the viewing of current policy choices in the light of forecasts of the future and longer term national goals. Many activities which currently characterize planning, and some that do not, will need to be linked together in a way which provides necessary separation of functions but close interaction among them. It will not be simple to find a pattern of organization which will permit the planners to concentrate on long-range issues and avoid diversion into day-to-day operations. Certain broad lines are evident, however.

To begin with we believe planning for foreign policy must have a government-wide dimension. Though a strong Policy Planning Staff in the State Department is a clear necessity, the manifold kinds of issues facing the nation, the interaction of foreign and domestic aspects of those issues, and the involvement of multiple departments in the issues—all point to the need for a Presidential capability for planning. We recommend, therefore, that:

The President should create a Council of International Planning (CIP), modeled in structure on the Council of Economic Advisers (CEA), to serve him directly and in a manner of his choosing in the planning for foreign policy.

We visualize that this CIP, like the CEA, would be composed of a few—3–5—respected "thinkers," knowledgeable in foreign affairs and supported by a minimum staff. The CIP presumably would concentrate on a few carefully selected problems—the Global Systems Critical List would be of special interest—and would call upon the resources of the departments and agencies, as well as the academic world, for research support. We would hope that the CIP would be close enough to operations to give its work a necessary relevance, but sufficiently detached to give it freedom to walk less traveled roads.

The history of Department of State planning organizations since 1947 clearly suggests that each Secretary of State will have his own notions of how such groups can be most useful. It also reveals that pro-

*The Global Systems Critical list Procedure suggested here is discussed in detail in the report to the Commission by Robert [illegible] "Organizing for Global Environmental and Resource Interdependence." (Appendix B)

Approved For Release 2003/02/27 : CIA-RDP86B00269R000600030001-1

Approved For Release 2003/02/27 : CIA-RDP86B00269R000600030001-1

posals to insulate planners from operations so that they do not become mired in day-to-day concerns are partially misguided. Unless a planning organization is useful to the Secretary and the Department in helping them cope with current situations, it is likely to atrophy or decline into irrelevance. No planning staff, however well organized and adroitly managed, will be effective if the Secretary himself does not believe in the planning function.

The Commission believes that organization of the Planning Staff in the State Department should reflect the emphases described earlier. It should be constantly pressed to concentrate on the key concerns of strategic concepts, anticipation and initiative, review and challenge, and reevaluation.

The organizational structure of the staff will probably not in itself be important, the selection of personnel being far more critical. Nevertheless, we would make the following broad recommendations concerning staffing organization:

A single, highly competent officer, personally selected by the Secretary, should be given full time responsibility for the work on the "State of the World Report."

Regular members of the Policy Planning Staff would normally be expected to involve themselves at one time or another in each of the planning functions—anticipation, challenge, reevaluation, and the formulation of strategic concepts.

The Director of the Policy Planning Staff should have one deputy to lead the work of the staff in fulfilling the role of anticipation and initiatives, and another deputy responsible principally for the challenge and reevaluation functions.

We have concentrated our attention on the government-wide coordination of planning and forecasting, and on the organization of the State Department's Policy Planning Staff as the most critical elements for general foreign policy. We believe that improved planning capacities are also needed in other parts of government.

The use of external experts assembled through the National Academy of Sciences to prepare the "Global Systems Critical List" is but one example of what we believe will be an increasing need to draw upon outside resources in order effectively to accomplish many planning functions. The development of new problems and the use of emerging new analytical techniques will require the highest competence available, sometimes on relatively short notice. In many cases the appropriate persons will be unable or unwilling to leave current positions for full-time government employment.

The Commission has considered the possibility of formalizing a link to outside scholars by establishing an external analytic group linked to the Policy Planning staff but outside the government and maintained by contractual funds. Such an arrangement might help insure that valuable expert opinions, advice and research—including the latest "academic" techniques—are available to help meet the official planners' needs. We have not presented such a recommendation, however, being persuaded that such a single external resource would tend to inhibit the utilization of a broader range of experts throughout the country, and it would therefore prove restrictive in actual operation. At least for the present, therefore, we believe it preferable that steps be taken to seek more widely, and more selectively, expert assistance wherever it can be found, rather than attempting to induce the ablest individuals to leave the institutions in which they are already working. To assist in this purpose we recommend that:

An Advisory Committee be created by the State Department, consisting of outside scholars and experts who can assist the Planning Staff keep abreast of new developments of substantive and methodological kinds. An officer of the Policy Planning Staff should be charged with matching the Staff's needs with outside researchers best qualified to meet them, and with being its link to the Advisory Committee and the external research community.

The closest collaboration between the planning office and the external research arm of the Bureau of Intelligence and Research (INR) is of course imperative. In order for this external participation in planning to be effective, additional resources will be needed, and better management of the sometimes difficult relationship between government and outside researchers and consultants must occur. The responsible officer should identify needed policy research in time to be relevant to policy concerns. He must establish necessary priorities among them. Within the State Department, individual planners or groups of planners working on specific projects should be allocated funds to acquire the services of consultants. The relationship between planners and outside experts should not necessarily be a comfortable one; a major purpose of the relationship between the two groups would be to compel planners periodically to reevaluate their own guiding assumptions.

One major impediment to effective longer-range forecasting and planning for foreign policy has been a strong reluctance to employ new methodologies and analytic techniques. The instinctive feeling of many foreign affairs practitioners that their area is only intermittently susceptible to analysis and that intuition derived from experience is the only sure guide to policy and action is reinforced by the complexities of some of these tools and by exaggerated claims some times made by people who have little experience with the realities of the policy process.

Approved For Release 2003/02/27 : CIA-RDP86B00269R000600030001-1

Approved For Release 2003/02/27 : CIA-RDP86B00269R000600030001-1

But as policy issues become more complex and technical, and as new data are created bearing upon them, we believe that sustained attention must be given to the applicability of computerized information processing and analysis, more sophisticated decision aids, gaming and simulations, and a variety of forecasting techniques for policy analysis.* Much of the necessary refinement will come from the outside scholarly community, but making them more relevant to the problems of policymakers and planners will depend upon a closer interplay between those in government who appreciate what is needed, and those outside with the requisite technical skills. Much more needs to be known about where such approaches can be helpful, and where they are not.

* A fuller discussion of these techniques, prepared for the Commission by C.A.C.I., Inc., is printed separately in Appendix G.

CHAPTER 11

BUDGETING AND FOREIGN AFFAIRS

All foreign policy measures involve resources in some form or degree—e.g., money, people, commodities, equipment, investment capital, and technical know-how.* Sometimes the resources appear in the budgets of foreign affairs agencies; sometimes in budgets of Defense or Agriculture or other agencies; sometimes in the private sector.

The effective treatment of resources in foreign policy analysis and coordination has been a continuing problem for the foreign affairs community. In 1962, the Herter Commission noted that the State Department paid insufficient attention to the translation of foreign policy objectives into action programs, personnel requirements, and resource costs. A White House Task Force report in 1967 noted that:

—Outside the annual agency by agency budget review conducted by the Bureau of the Budget, no office or institution reviews the budgets of the foreign and national security affairs agencies from the perspective of the priorities, commitments and requirements of foreign policy.

In 1970, the State Department's program for self-improvement—*Diplomacy for the 70's*—stated that "the inability to link resource allocation to policy analysis was one of the Department's most serious weaknesses." The report endorsed the view that "some form of foreign affairs programming system is essential to the conduct of foreign affairs and indispensable to the Department of State's responsibilities." We agree, and in the discussion which follows we propose a number of specific reforms.

Complexities of Budgeting in Foreign Affairs. A number of factors makes the budget process less effective as a policymaking, decision-forcing activity in foreign affairs than in other areas.

First, in many cases, the resource aspect of foreign policy decision is quite small relative to the importance of the policy, and is frequently not a major factor in whether a decision is taken. For example, a $20-$20 million grant of military equipment to Turkey or a $200 million economic aid grant to Egypt may be a small price relative to a possible improvement in our relations with that country at a

*Much of this chapter is based upon the two studies: *Budgeting Programming and Foreign Affairs*, by [illegible] and *Congressional Use of its Money Power to Control Foreign Policy*, by Allen Schick, which appear in Appendix T.

Approved For Release 2003/02/27 : CIA-RDP86B00269R000600030001-1

Approved For Release 2003/02/27 : CIA-RDP86B00269R000600030001-1

critical point. Overall, outlays for all foreign affairs programs, including military assistance, are proposed at $9.1 billion in the FY 1976 budget, or about 3% of the Federal total that cannot in any way be a measure of the relative importance of foregin policy activities.

Second, there may be no direct connection between the budget process and policy decisions in the foreign affairs area. For example, the importance of the decision to recognize a new country is in no way related to the costs of opening an Embassy. Major decisions on foreign economic policy—the floor price on oil, actions to bolster the dollar on foreign exchanges, actions to reduce trade tariffs and barriers—are largely made outside the budget, and may only indirectly affect Federal outlays.

Third, difficulties arise in planning and budgeting for foreign policy effectively within the annual budget process because so much of policy depends upon external developments—actions and reactions of others over which the U.S. policymakers have little or no control. Swift-moving events do not fit the timing of the annual budget process, causing either: (a) deferral of costs to a supplemental budget request or (b) budgets no longer in tune with events (e.g., a U.S. withdrawal in S.E. Asia).

Fourth, the problem is further complicated by the fact that benefits are often hard to measure. The major foreign affairs expenditure programs over the last 10–15 years have been resource transfers to developing countries in various forms—AID programs or project loans, technical assistance agreements, military aid, PL 480 shipments. They helped provide the foreign exchange and capital required for modernization. Usually our aid was tied to certain self-help or policy changes intended to improve the development process. But to measure real benefits from the U.S. transfers, one would have to deal with the entire economy and all economic variables, which would be difficult in any case.

A fifth complexity in treating resource allocation in the foreign affairs area stems from the growing intermingling of foreign and domestic programs in support of foreign policy. The impacts related to foreign policy may be spread through the budgets of many domestic areas. For example, expanded energy research and development outlays or new gasoline taxes have direct foreign policy relationships. Investment by Mid-Eastern oil countries in U.S. airlines or aircraft companies can trade off against direct budget or tax subsidies to these companies. Outlays to produce or stockpile wheat may relate more to the world food situation than to domestic needs. Research and development on desalting reactors, fertilizers, rice production, or military equipment may improve exports and allied capabilities more than U.S. capabilities. Space cooperation with the USSR is funded in the NASA budget.

Finally, non-Federal resources may be most critically impacted by foreign policy actions and must increasingly be taken into account. These impacts may relate to stability of the dollar; the price consumers pay for coffee, copper, and oil; the flow of investment capital to or from the U.S., taxes on foreign earnings of multinational corporations; and the rate of overall inflation including the derivative economic effects.

Despite these many and important difficulties, the budget process is a critically important instrument for planning and control in the conduct of foreign affairs, by no means confined to "heavy resource activities."

With increasingly sophisticated techniques budgeting has been able to relate activities only indirectly tied to major resource allocations to program direction. We believe that the State Department and other foreign affairs agencies under Cabinet level leadership, must utilize the budgeting procedures to improve the overall conduct of foreign policy.

In addition, the significant resources flowing through the Federal budget related to international activities, must be dealt with on an improved basis. The major programs within the $9.1 billion are mainly for economic and financial assistance ($5.5 billion) and military assistance ($2.8 billion). To these sums should be added the budgetary affect of loans of the Export-Import Bank when it is included in the Federal Budget starting in October, 1976 (estimated at $1.7 billion in FY 1976).

The budgetary issues in foreign affairs will grow rather than diminish in the future, even as some of the bilateral aid programs decline. The new budgetary needs will relate primarily to U.S. response to increasingly critical issues of global interdependence which cut across almost all areas of governmental concerns: energy, food, commodity stockpiling, monetary arrangements use of space and oceans, narcotics control. A Mid-East settlement could involve substantial U.S. resource transfers. SALT negotiations will have important impact on Defense and intelligence programs.

Organizational Levels of Concern. A comprehensive budgetary approach (incorporating planning, programing and evaluation as well as the budget itself) will serve various decision-makers in different ways. For example, an Ambassador can use a comprehensive country program, covering the resources of all U.S. agencies, as a means both of developing an optimum U.S. policy toward the country and of controlling agencies' activities within policy directions. A Regional Assistant Secretary of State may use the system to ensure balance and consistency among programs in a region. An agency head, such as the AID administrator, may use the system to ensure that U.S. re-

Approved For Release 2003/02/27 : CIA-RDP86B00269R000600030001-1

Approved For Release 2003/02/27 : CIA-RDP86B00269R000600030001-1

sources are targeted to the sectors in which they can make the greatest developmental difference.

The Secreary of State, through the Policy Planning Staff and other departmental staffs, can take all budget and nonbudget resource implications into account in formulating policy initiatives related to multinational issues (food, oil, oceans, arms control, etc.) and ensure that allocations to regions and countries are consistent both with long-term foreign policy objectives and move immediate tactical considerations.

Thus what are the general principles which should guide more effective use of resource management in the international arena?

We propose no radical or unconventional solutions. The processes have largely been established; the "actors" are in place; and the techniques of analysis are available. But the systems have worked ineffectively and sporadically. The issue is to make existing processes in the foreign affairs area work as they should, and this is frequently harder than inventing new machinery.

Improving the Executive Budget Process. We recommend, first, that

The President should direct a key foreign policy advisor (logically the Deputy Secretary of State) to become more deeply involved in the review of significant budget and related activities of foreign affairs agencies and domestic agencies which have international implications; thus to ensure that these programs effectively express the President's foreign policy objectives.

Past efforts to achieve this review have not been very successful, primarily because the principals were too busy, the mandate was unclear, the payoff uncertain, and staff work inadequate. For example, OMB staffs have on several occasions discussed with the Deputy Secretary and Regional Assistant Secretaries of State budget issues of other agencies late in the OMB review process. But the efforts were not fruitful, primarily because of the eleventh hour approach to complex issues.

To carry out this recommendation, State would have to designate specific staffs at the Secretary's level and in the regional and functional bureaus to participate throughout the year with OMB and the agencies involved in the review of international programs and issues. OMB, for its part, should be responsible for seeing that State is more effectively involved in the budget decision processes, including those related to domestic activities (e.g., energy programs, commodity stockpiling, narcotics control, etc.).

Particularly close relations between OMB and NSC should be developed: the OMB Director and his staff should participate more in the foreign policymaking process, and NSC personnel must be involved in the budget process.

Here again some steps have been taken. NSC staff members now sit on the OMB Director's Review of economic, military assistance and PL 480 programs. But the contact and mutual involvement should be broadened, and the division of responsibilities clarified.

Both agencies, with State, should work to improve the Federal Government's capacities to collect, process, and analyze global data relating to increasingly central issues of interdependence.

As foreign and domestic policy and programs become more intertwined, OMB must develop new ways of flagging and analyzing issues which do not fall neatly into the foreign/domestic pattern in its staffing. Coordination has been effective among the OMB program divisions on matters like food, aid, space, desalting reactors, etc.; but the issues are getting more complex and the ramifications harder to deal with. Program analysts on domestic programs must comprehend the foreign policy implications, and vice versa. Thus, some further degree of procedural innovation, perhaps involving establishment of new analytic staff or ad hoc staff teams, is required.

A limited interchange of personnel of State, NSC, and OMB should be instituted to improve these interfaces. In addition procedures for assessing the cross-agency budgetary impact of new international commitments should be reviewed and modified as appropriate.

Country and Regional Programming. The record to date on country and regional programming has been spotty. Yet there have been some significant results, and the techniques, if intelligently applied, can in other areas improve policy discussions, decision-making and program implementation. It is clear, however, that the main utility is going to be for those regional and country managers in the Department of State where major resource related programs are involved.

The Country Analysis and Strategy Papers (CASP) of the Latin American Bureau of State have been the most effective, enduring example of foreign affairs programming. The CASP papers are country based, strategy papers which relate U.S. interests and objectives to the changing country conditions and to proposed program actions and resource levels. The papers are developed by the Country Team under the supervision of the Ambassador and reviewed by an Interdepartmental Group chaired by the Assistant Secretary of State. Representatives of OMB and NSC participate. The reviews have been effective in sharpening policy and objectives in relation to resources and ongoing activity. But no institutional vehicle exists for review of CASP's at higher levels of the State Department or the NSC system, nor for monitoring consistency of agency budget requests with CASP guidance.

In other regions a CASP-like procedure has been tried in the last few years, known as *Policy Analysis and Resource Alloca-*

Approved For Release 2003/02/27 : CIA-RDP86B00269R000600030001-1

Approved For Release 2003/02/27 : CIA-RDP86B00269R000600030001-1

tion (PARA). PARA documents are not necessarily reviewed by the Interdepartmental Regional Groups, though they may be in some cases. The PARA process has been useful to the Bureau of African Affairs, particularly in introducing realism into analyses of objectives and field generated programs but has fallen into disuse.

Programming systems, if not carefully managed, can become paper mills in which the cost in time and effort outweigh the benefit. We are led to observe that the approach to these procedures should be selective and tailored to the needs and capabilities of country and regional staffs. For example, the needs of Latin America and Europe will differ considerably. Within a given region, not every country program may need review each year; effort should be concentrated on areas of priority and change. The techniques should not be attempted without adequately trained staff. Finally, the time involved in the effort should be kept within reasonable limits commensurate with the benefits received. Our recommendations, therefore, are that:

The State Department, through the Deputy Secretary, should continue to lead in extending Foreign affairs programming techniques on a selective, step-by-step basis, supported by NSC and OMB. Responsibility of the Assistant Secretaries of State for the coordination of government programs in regions and countries should be reaffirmed.

Annual policy and program reviews of specific country and regional programs should be instituted with recommendations by the Assistant Secretaries on agency programs to be cycled into the budget process.

Staff capabilities in regional bureaus for program analysis and coordination should be appropriately strengthened.

The foreign policy machinery (NSC and State) should continue to direct from time to time country and regional studies by ad hoc teams with designated leadership where the above cited interagency programming reviews might not produce the "fresh" policy options and resource analysis required in the President's perspective.

Ambassadors, particularly in large countries, should promote country programming techniques to meet their managerial needs. These efforts should be directly integrated with State-led regional and country reviews and with the agency-based budget processes.

Agency systems are essential to meet the responsibilities of agency heads for resource management. Even within negotiated foreign policy directions and country levels, each agency must see that programs are targeted and implemented in the most effective manner. Thus, the agency systems must continue to be strengthened under OMB's leadership. Moreover, these analytic and budgetary efforts must both feed and reflect the central foreign policy processes (NSC studies, OMB cross-cutting analysis, country programming at State and Ambassador levels, etc.).

A Foreign Affairs Budget. From time to time recommendations are made for a "Foreign Affairs Budget" directed by the Secretary of State. The proposal, often modeled on the Defense Department experience, suggests that all programs of whatever agency which relate directly to foreign affairs be consolidated into a single presentation on which both the President and the Congress could act.

The Commission concludes that this device would not be a fruitful approach in the present circumstances. In part the concept is a misreading of what a budget actually is—an instrument of decision and control, not an informative presentation. A budget requires a decision-maker. A Foreign Affairs budget could be a valid instrument only if the Secretary had direct responsibility for the programs involved. Moreover, the diffusion of responsibility in the Congress over various elements of Foreign Affairs related programs presents great obstacles.

It may well be useful, however, to develop for analytic purposes a display of all budget—and perhaps all private—resources bearing directly on foreign affairs. Such a document could place before Executive policymakers and the Congress a broader framework of resources bearing on international matters. It might start with direct Federal outlays and over time be refined to include tax expenditures together with some indication of indirect costs and benefits related to the non-Federal sector. We would endorse such an effort.

Improvements in the Congressional Process. The appropriation and authorization processes have up to now been a prime vehicle for Congressional influence over foreign policy. Thus Congress has added provisions to the authorization bills for economic assistance, military aid and sales bills, USIA, State and Peace Corps annual authorizations, as well as Defense procurement and R&D authorizations. In some cases, Congressional views have been signaled by budget reductions or delay in enactment.

In the Congress, the interpenetration of foreign and domestic policy brings about involvement of a larger number of Committees in international activities. On the authorization side, this involvement includes the House International Relations and the Senate Foreign Relations Committees, the Banking and Currency Committees (multilateral aid), the Armed Services Committees (military assistance), Ways and Means and Finance (trade and tax), the Agriculture Com-

Approved For Release 2003/02/27 : CIA-RDP86B00269R000600030001-1

Approved For Release 2003/02/27 : CIA-RDP86B00269R000600030001-1

mittees, to name a few. A similar lineup occurs with regard to the appropriations subcommittees.

The new Congressional budget procedures now being implemented are designed to improve Congressional consideration of overall revenue and outlay totals in the budget and the establishment of priorities of National need within them. For the time being, it adds to the number of Congressional bodies reviewing resource allocations in the international area.

Finally, it must be recognized that the way in which the existing committees and the new entities address issues in their resource reviews can either strengthen or weaken the programming and analysis capabilities in the executive branch. Congress sets the tone through the nature of the questioning, focusing on substantive, longer-term issues using analysis, or employing primarily arbitrary and detailed approaches (e.g., State travel allowances). Our recommendations are that:

The two foreign relations committees should be given opportunity to review and comment on the views and estimates of the Appropriations Committees (submitted by March 15 to the House and Senate Budget Committees) so that the latter committees could consider the foreign policy implications of the recommendations on appropriation items (for example, on agricultural production or defense posture).

The two foreign relations committees should have representation on the Budget Committees of both Houses to improve consideration of issues which relate to domestic and international considerations.

Congress should move to simplify the process either by (a) limiting the authorization bills to general levels of expenditure and by placing more detailed revisions in more permanent legislation not repeated each year (e.g., AID and MAP), or (b) adopting multi-year authorizations which could focus review more effectively on the direction and longer-term effectiveness of programs.

The latter procedure would be in line with domestic Federal grant programs. For example, it may be desirable to adopt two-year authorization for both economic and military assistance and, by alternating them, to consider one in greater depth each year. This procedure would help to expedite the authorization process. It also should make possible review of foreign relations authorizations for the foreign relations committees on more expeditious time schedules, much as the Armed Services Committees do for far larger programs.

Although not presenting a recommendation on the matter, the Commission concludes that the role of the [illegible] been substantially altered by the advent of short-term authorizations and the new Congressional budget process. As a logical extension of the establishment of this process, it might be appropriate to explore the possibility of combining authorizations and appropriations into a single process handled by one set of House-Senate "Program" Committees. The "Program Committees" could meaningfully operate within the overall budget and fiscal guidance provided in the Congressional budget process.

Approved For Release 2003/02/27 : CIA-RDP86B00269R000600030001-1

Approved For Release 2003/02/27 : CIA-RDP86B00269R000600030001-1

CHAPTER 12

PERSONNEL FOR FOREIGN AFFAIRS*

THE PROBLEM—THE NEED FOR A STRATEGY

The environment for international relations is changing at an accelerating rate, confronting the foreign policymaker with new challenges and complexities.

Personnel systems and the people in them, however, tend to adapt more slowly. In fact, unless personnel systems are managed effectively, they and the "cultures" they produce can become obstacles to change and vital adaption.

People are the most important ingredient in making foreign policy. As all executives know, getting the right people in the right jobs makes the difference between good or mediocre performance, or even failure, in any enterprise. And people at the top who direct organizations count most.

However, sustained attention to personnel management and executive development in the federal career service appears to be at a low ebb today. What is needed is a new initiative: a signal from the top that Government is concerned about recruiting and developing talented people, putting them to work productively on the complex problems we face, and providing them with the opportunity to rise to top responsibilities in the Nation's service.

Foreign affairs personnel management is of sufficient importance to the Nation that it should lead other areas of government. An opportunity exists to introduce new concepts of personnel management, particularly executive development. The experience can at an appropriate time be applied more broadly to the Federal Service.

Our proposed strategy for improving foreign affairs personnel systems is intended to provide the President, the Secretary of State, and the heads of other involved agencies with the best qualified people for the many kinds of tasks involved in formulating and executing U.S. foreign policy in a rapidly changing environment. To this end, we present recommendations in subsequent sections which deal with

*This chapter draws upon a number of studies produced for the Commission by James W. Clark, Theodore P. LeVino and William K. Cordier, John P. White and David S. C. Chu, William T. McDonald, Charles Parker, and R. B. Moon, all of which are reprinted separately in Appendix P to the Commission's Report. Other participants in the Personnel project are listed therein.

579-209 O - 75 - 12

Approved For Release 2003/02/27 : CIA-RDP86B00269R000600030001-1

Approved For Release 2003/02/27 : CIA-RDP86B00269R000600030001-1

the needs of the Department of State, of the Foreign Service, and of the government as a whole in six major problem areas. Specifically, these recommendations are designed:

—to build the State Department's capabilities for interagency leadership in the functional issues of foreign policy.

—to define the role of the Foreign Service and deepen its foreign assessment capabilities.

—to improve the State Department's Personnel management capabilities.

—to broaden and accelerate the Foreign Service career.

—to institute an executive development program for the State Department and the international activities of Government.

—to establish improved arrangements for employee-management relations in the foreign affairs agencies.

The President and the Secretary of State must lead in developing and implementing such a foward-looking personnel strategy in the international area. They alone have the constitutional and legal responsibility and the executive power to initiate and carry out reforms and to overcome bureaucratic inertia and obstacles. A long view is required in this area. While there are short-term benefits from personnel reform, major changes in recruitment and executive development require 5–15 years for full payoff.

Congress also has an important responsibility in personnel matters. It is, in effect, a Board of Directors for reviewing the operation, effectiveness, and fairness of our personnel systems. In many ways more continuity of viewpoint is found in the Congressional than in Executive leadership. One might therefore expect Congress to take the longer view in personnel management, but in practice this is not the case. It tends to be more at home in dealing with the specifics of legislation, cases of individuals needing redress, and the investigation of problem areas. What is needed from Congress is consistent pressure on the executive branch for tackling the hard issues of basic reform.

Before presenting our recommendations, we believe it is useful to set forth in the following section our findings, particularly concerning the fundamentally important area of executive development, which emerge from our exploration of comparable personnel practices in other fields.

LESSONS OF EXECUTIVE DEVELOPMENT

To most people in a system, their personnel problems are felt to be unlike those of other organizations. Unique features and problems exist in any system, but the similarities in problems faced by large organizations of many kinds are often striking. This comparability is especially true in the area of executive development—the preparation of leaders for the future. Accordingly, the Commission undertook studies of executive development (a) in multinational corporations considered to be leaders in the field, (b) in the military establishment, and (c) in federal agencies. Our main interest was in developing a framework for approaching the problem in the foreign affairs area and in identifying the basic criteria and conditions precedent in making these systems work.

Corporations. The needs which lead corporations to undertake special executive development are remarkably similar to those faced in foreign affairs. The core problem is one of meeting challenges and new dimensions, which force changes in executive tasks. Companies growing in size, diversifying product lines and businesses and expanding from national to international markets demand executives who can adapt. In many cases, companies that made their names in one business or set of products in the U.S. market over a matter of a few years have become conglomerates with 10–12 major subsidiaries, each with varied product lines and operating in 20–30 national markets. The production, marketing, financial, and legal complexities involved in running these enterprises have mounted geometrically.

Such growing companies often find themselves with an executive corps no longer attuned to the business they were in. An executive usually had grown up primarily within one function or product line. His approach to management, shaped by this predominant experience, was not judged to be fully relevant to running either new businesses or directing at the top corporate level.

The companies found executive broadening for top levels is not easy. Each subsidiary has its own traditions and performance pressures; its management husbands its own executive talent. Vision and will are required for corporate management to overcome parochial resistance and to select and develop executive talent across decentralized units. Only thus can an organization survive in a changing and competitive world.

The fundamental approach to executive development of such companies has important lessons even for government. At junior professional levels, companies recruit the best talent available to fill specific jobs in a particular function. The junior officer is a "specialist" first. On the basis of proven performance in a succession of specialist jobs, plus training, he demonstrates his "generalist" or integrative capabilities and works his way to executive levels to the top. The [illegible] more.

The Commission study indicates also that the executive manpower

Approved For Release 2003/02/27 : CIA-RDP86B00269R000600030001-1

Approved For Release 2003/02/27 : CIA-RDP86B00269R000600030001-1

systems of leading multinational companies tend to have the following characteristics in common:

1. The top executive is personally committed to and involved in the system. He personally inspects plans, reviews progress, and evaluates results.
2. Individual managers throughout the hierarchy are held accountable for the development of subordinates. They recognize and fulfill their obligations for delegating, coaching, encouraging, helping subordinates get promoted, removing personnel who can't perform, etc.
3. Producing an internal upward flow of competent executives is a long-term proposition. No quick miracles are expected. Executive development is a "way of life."
4. Executives are promoted on the basis of performance and achievement, not loyalty, longevity or old school ties.
5. Employees understand they can realistically aspire to positions at all levels in the hierarchy, including the very top. No class or layers of positions are reserved for an external or elite candidate stream.
6. Executives develop primarily on-the-job, and jobs are used developmentally. Patterns of experience, exposure, and challenge have been identified as career planning frameworks, but not rigid tracks. Training courses and workshops supplement work experiences.
7. Special executive development staff functions are required. Although line managers make the system work, staff dedicated to this function with corporate-wide perspective serve as talent scouts, candidate data sources, career counselors, systems consultants to executives, etc.
8. An annual manpower plan review is commonly employed and judged to be the single most potent tool in producing the desired results.

In almost every personnel system studied, executive development supplements but is separate from ongoing personnel and employee-management activities. It is precisely because these regular processes do not serve the needs of executive development that the special systems exist.

The Military. The process of developing the military executive (defined as Major General/Rear Admiral and above) is similar in some respects to that of business. Each of the four Services has multiple subservices and specialties (artillery, submarines, fighters, missiles, intelligence). A wide variation exists between skills required at the beginning of careers and those needed in executives. In early years, the Services need specialists proficient in weapons, unit command, and tactics. In the career progression, a rigorous process is applied to find and develop men who have strategic, cross-specialty, and service-wide capabilities. Quality is maintained by the highly competitive selection process at the top (only .5% of the officer corps reach the executive level), an orderly progression of broadening assignments in line and staff capacities, and an extensive training component throughout the career.

Personnel management is taken seriously by the military services. The Director of Personnel is a three-star General reporting directly to the Service Chief of Staff, who himself devotes considerable time and attention to the personnel system. The Services build functional competence into personnel management—both officers and civilians. They use sophisticated manpower planning techniques.

The Federal Service. By and large, executive development in the Federal Service is an agency responsibility. In response to guidance and encouragement from OMB and the Civil Service Commission, most agencies have established programs for developing and training executives within their own confines. Some of these programs, such as the Veterans Administration, TVA, and Internal Revenue Service have been adjudged highly successful. But the larger Departments have had difficulty in developing effective systems which cross the large and highly autonomous bureaus.

The CSC's effort to establish a cross-agency Federal Executive Service has considerable interest for this analysis. A bill was introduced in Congress in 1971 which had five salient purposes:

—to provide agency heads with more flexibility in administering supergrade executives, both as to numbers and pay scales (executive grades would be abolished and the numbers established by agencies, after central review, with congressional approval after a 90-day wait).

—to reduce the distinction between career and non-career executives (the latter could be 25% of the total), both selected on merit.

—to introduce a renewable three-year contract for career executives, which if not extended by the agency, would result in retirement or return to GS–15 status.

—to provide for flexible assignment or reassignment of career and noncareer executives to any duties within the scope of the Service.

—to encourage executives to participate in training and development programs.

This bill attempted to recognize the realities of executive employment and to introduce flexibility in managing and developing executives across bureaus and agencies. The legislation failed to pass the [illegible] Commission is planning new and modified proposals.

Approved For Release 2003/02/27 : CIA-RDP86B00269R000600030001-1

Approved For Release 2003/02/27 : CIA-RDP86B00269R000600030001-1

STRENGTHENING THE STATE DEPARTMENT

Problems and Strengths. Over the last generation, the performance of the State Department and its personnel has been subject to substantial criticism by Presidents, Secretaries of State, and other top level foreign policy practitioners. A pattern to these criticisms can be identified:

—slowness or lack of responsiveness to the needs and wishes of Presidents and Secretaries.

—lack of Presidential or Secretarial perspective—the tendency to be advocates of country and regional concerns rather than rigorous integrators of U.S. national interests, domestic and foreign.

—lack of innovation or policy leadership.

—a preoccupation with bilateral relations in a world where foreign policy issues are rapidly becoming multilateral.

—lack of both a specialization of talent and a managerial competence and ability to interact constructively with "expert" agencies in developing policy which reflects national interests.

—lack of appreciation of the currents of domestic opinion and interests which affect foreign policy, particularly those coming to focus in the Congress.

All of these criticisms reflect upon the quality of State's general organization and direction as well as its personnel management.

In the more specific terms of personnel management, the problems we found are similar to those of previous studies:

—sharply limited functional competence and a corresponding lack of continuity in key areas.

—poor classification procedures and overgrading of jobs.

—overstaffing at senior levels (20% of FSOs are at senior levels—FSO-2 and above).

—serious mismatching in rank of people and jobs.

—cumbersome promotion procedures.

—slow growth in responsibility and in promotion, especially in middle grades.

—an archaic and unresponsive recruitment process.

—inability to make effective use of Civil Service and FSR authorities.

—a continuing dichotomy in thinking about the Foreign Service Officer and the rest of the Department.

—negligible manpower planning, including [illegible] if not disdain for, any executive development.

The fact that the Department has not been able to deal adequately with these problems has given rise to the disproportionate number of external studies of personnel management which, together with the history of unaccepted and unimplemented recommendations, stands as convincing testimony to the dimensions of the problem.

On the other hand, the Department does have basic strengths in the personnel area which should be built upon:

—the individuals in State, especially in the Foreign Service, are considered to be of high quality, even by the senior officials who decry State's corporate performance (a paradox which can be resolved only by effective management).

—State possesses a wider variety of personnel authorities and thus greater flexibility than almost any Department.

—foreign affairs is considered an attractive and challenging subject matter, a strong plus in recruitment.

Strengthening Functional Competence in Washington. In 1955, a public committee appointed by Secretary Dulles and chaired by Henry M. Wriston conducted a landmark study of both Washington and overseas aspects of State's personnel management. The problems of the mid-1950's, however, were significantly different from those of today:

—The FSO Corps was small (about 1300) and, because of its aversion to lateral transfer and troubles with recruitment, could not meet the expanded demands of postwar diplomacy in Washington and abroad.

—The Departmental Service was strong and too clearly delineated from the FSO Corps. It was predominantly Civil Service personnel who did not go overseas.

—The FSO spent too much time abroad, and in fact many officers were not meeting the statutory requirement of 3 years in Washington out of their first 15 years in the Service.

The adopted solution, known as Wristonization, was to increase the number of jobs designated to be filled by Foreign Service Officers, notably in headquarters, and to blanket into the FSO Corps by lateral entry Civil Service and FSR personnel filling those positions. In the two years 1955–56, some 1100 officers were "Wristonized." By the end of 1960, the FSO Corps had grown from 1300 to over 3700. Civil Service professionals in Washington declined 18% in the same period.

Today, the major personnel problem facing the Department is not the size and quality of the overseas staff or its competence in bilateral politicial relations. It is the expertise and continuity of the Washington staff to support the Secretary in dealing with the complex policy issues in the difficult interagency arena. The principal concern is whether the Department has the functional competence and bureau-

Approved For Release 2003/02/27 : CIA-RDP86B00269R000600030001-1

Approved For Release 2003/02/27 : CIA-RDP86B00269R000600030001-1

cratic skill to play an effective role at home and abroad in the development and coordination of policy in complex fields of trade and investment, international monetary matters, food production, energy, deep ocean rights, environment, military and arms control policy, technology exchange, promoting nongovernment exchanges, etc. All of these, it should be noted, are areas where domestic and foreign policy are intermingled.

The Commission found widespread agreement that the effectiveness of State Department personnel in these functional areas (in both functional and geographic bureaus) is at a low ebb. The basic problems, it would appear, stem from two shortcomings:

—the ineffective use of Civil Service and FSR authorities to hire special competence required.

—the excessive reliance upon the FSO's in filling key jobs in Washington calling for functional competence.

The process of hiring functional specialists is revealing. When an assignment comes open in a functional bureau, existing policy is to use FSO's who are in need of Washington assignments. A functional bureau chief may have identified a highly qualified candidate from outside the Department, but such appointment requires an exception to the policy by the Director General of the Foreign Service. The exception is granted after a time-consuming determination that no available FSO has the necessary qualifications: a process which can be expected to take from nine months to two years, by which time, the outside candidate has gone elsewhere.

Moreover, even if the FSO's have the requisite functional competence, they usually do not like assignments in the functional bureaus. They tend to suffer through the 2-year tours, negotiating their next assignment back in the "mainstream." In some instances, officers sent to functional bureaus are those deemed less qualified for the mainline assignments. Some are in senior grades and are "parked" in the functional bureaus until retirement.

The problem is not statutory. The Department has flexible personnel authorities to obtain all of the talent it requires from a variety of sources. Rather, it is strictly a policy imposed by the Department in operating the current systems: a policy to use Foreign Service for all possible jobs; a policy based on the dual assumption that anyone in State should be willing to serve overseas and that everyone who is useful in diplomatic relations overseas can be useful in Washington.

Focusing attention on the problem of increasing functional competence in Washington is not to drive a wedge between the field service and the headquarters—the Foreign Service and the home service. It is not to advocate going back to pre-Wristo[illegible] quarters assignments for Foreign Service officers. Rather it is to say that modern foreign policy, in support of the President and Secretary of State, cannot be developed without a multitude of skills covering a range of fields almost as broad as the Government itself. Not all these skills can be in the State Department or Foreign Service, but the State Department and Foreign Service should have enough to fulfill their special function of assessing foreign implications of policy and actions, and to play an appropriate role in developing national policy. We recommend that:

The Department should develop an annual manpower plan in which each bureau chief should specify the kinds and mix of functional and bilateral competence required for a 3-year period and the way in which this talent will be acquired or developed.

Within the annual plan, to be approved by the Secretary, bureau chiefs (functional and geographic) should proceed to acquire the personnel required, making effective use of all personnel authorities without case-by-case approval of personnel authorities.

A viable professional system within the Civil Service authority should be developed for adequate career appointments to attract and retain qualified personnel.

The Department should request the necessary GS supergrades to provide meaningful career ladders in the Civil Service category.

Functional bureau directors should participate in the informal FSO assignments process and career planning to the same extent that geographic bureaus do.

Role of the Foreign Service Officer. To come to a truly departmental personnel strategy, it is necessary to think clearly about the role of the Foreign Service Officer Corps and its contribution to the making of national foreign policy. The 3500 FSOs comprise about 44% of the total American professionals in the Department.

As background to the study of this issue, the Commission made an extensive analysis of the "average" career in the Foreign Service and its unique "culture." Several findings with respect to the career should be stressed in summary:

—Two-thirds of the average career is spent abroad; one-third in Washington in training and in duty assignments in State and details to other agencies.

—The Foreign Service occupied positions have a very high representational and operational content and experience (handling cables, filing reports, handling visitors, communicating with the foreign government, etc.). A smaller part of the career is devoted [illegible] analysis.

—Career development is slow, with a long middle period involving

Approved For Release 2003/02/27 : CIA-RDP86B00269R000600030001-1

Approved For Release 2003/02/27 : CIA-RDP86B00269R000600030001-1

fairly routine work and little increase in job responsibility and content from one assignment to the next.

—Relatively little opportunity is available for management experience; ordinarily, opportunity to supervise 10 or more people does not occur until after 20 years (individual in his late 40's).

—In spite of the cone system, most substantive officers are essentially "generalists" on entrance and remain so during the career. With limited exposure to the specialties (some strides have been made in economics), primary emphasis in training and career development remains with area studies and language.

—The career concept is the opposite of that found in industry and the military, which take top performing specialists and make generalist executives. The Foreign Service takes generalists and attempts to introduce them sufficiently to fields of specialization to produce executives with integrative capability.

In developing a personnel strategy and suggesting change, a number of aspects of the Foreign Service "culture" need to be recognized:

—The entering FSO class in FY 1974 still comes predominantly (60%) from the history/political science disciplines; economics represented 13% of the total.

—The surest road to the top is considered to be the political cone.

—Tours of duty in another agency, a functional bureau, and even most training courses are considered lost time out of the "mainstream."

—Outsiders (lateral entrants) are often resented.

—Specialists and administrators are tolerated but second class citizens.

—There is an exaggerated respect for rank and hierarchy.

—Good officers accept discipline and do not differ with supervisors, especially ambassadors.

—If you pass the threshold review (FSO-6 to FSO-5) and "keep your nose clean," you will make senior levels of the service with a shot at the top.

—The mores of the system, its hierarchical structure, its professional style, and its system of rewards are not conducive to creative thinking.

—If you have not served abroad, you cannot really make foreign policy.

From the foregoing, it is reasonable to conclude that the Foreign Service Officer is first and foremost a diplomat—which is to say, an expert in conducting bilateral relations. His major task is to man the diplomatic posts and missions overseas [illegible] operational and policy expertise in Washington.

The FSO in our view, though now recruited as a generalist, becomes essentially a specialist in conducting bilateral relations. In today's world, he is not a "foreign affairs generalist" in the sense of seeing national policies in Presidential and Secretarial perspectives. There are too many streams of consideration and competences which must be integrated with bilateral competence to produce foreign policy in a world where multilateral issues will increasingly predominate. However, the FSO should have the opportunity to earn the broader designation by solid achievement in many subject matter areas, by reaching out to broaden himself through assignments and training and by competing with others within and outside the Departments.

In one area in particular the FSO must intensify his efforts and develop his talents: the rigor and depth of foreign assessment. Some analysis and assessment is now performed in connection with political, economic, military, and technological reporting. But studies for this Commission and others indicate that present reporting, while voluminous, too often focuses on description of events and conversations and too little upon the meaning and longer-term possibilities. In Chapter 9 we have discussed in considerable length the nature of this assessment role.

An increase in analysis and in the ability to explore and present bold policy and program options does not come simply by willing it at the Secretary's level. It can only be the product of a broad, well-conceived strategy which includes recruiting, developing, promoting and encouraging people who are at home in this task. If we want innovators and free systematic exploration of ideas, management must set a new framework and behave in a way which demonstrates its commitment. The Commission recommends that:

The Foreign Service should be recruited, trained, and sized to its historic mission—that of representing U.S. interests in foreign countries. This requires people willing to and psychologically attuned to serve in alien and difficult situations and who have strong basic competence in area studies and language.

A major change in emphasis, however, should be directed toward improvement in rigorous short and longer term assessment of U.S. interests and analytic reporting.

The officers should be broadened by experience and training for the new assessment emphasis, particularly in the area of economics.

Improving Departmental Personnel Management. The problems of personnel management, whether those of the functional bureaus or the Foreign Service, are symptoms of a more fundamental problem. The top management of State is of necessity so policy and externally oriented that it has little time for sustained attention to internal man-

Approved For Release 2003/02/27 : CIA-RDP86B00269R000600030001-1

Approved For Release 2003/02/27 : CIA-RDP86B00269R000600030001-1

agement. All Secretaries of State have shown interest in management and a desire to make lasting improvements in the working of the Department. But sustained attention to internal management strategy and implementation has been lacking since the era of Marshall and Acheson.

Past studies have focused on the number two man in the Department, now the Deputy Secretary. Many have felt he should play the role of "Mr. Inside," and preeminently concern himself with Departmental management. As the alter ego of the Secretary, however, he faces heavy policy pressures. He serves as Acting Secretary when the Secretary is out of the country. He is on tap with the White House and bears a large share of the burden of Congressional testimony. He is also absorbed in interagency problems, particularly with Defense. This problem is frequently exacerbated by fuzzy delineation of duties between the Secretary and his Deputy. The "one-two relationship" is always difficult, even with experienced managers involved.

The greatest need is to develop a clear Secretarial view in the management of the Department. We conclude that it is feasible and logical to use the Deputy Under Secretary as the major vehicle for meeting this need. There should be a clear Presidential and Secretarial charter as to what is to be done. The individual selected for this position must have the management and foreign policy stature and closeness to the Secretary to do the job; there must be adequate arrangements for reporting to the Secretary through the Deputy and for keeping abreast of the evolving substance of foreign policy.

It is important to emphasize that the Secretary remains responsible for the management of the Department and its personnel and that the Deputy Under Secretary is acting for him. Also, personnel management should be coupled with budget management under the Deputy Under Secretary for Management. The combination of budget and personnel provides the necessary strength to plan and carry out this difficult assignment.

The vacuum in consistent management direction from the top has been filled by the Foreign Service, the continuing body which cares most. Today, it dominates the Department through the personnel management function. The assignment process is, of course, a critical element in this control.

The chief of personnel in the State Department is the Director General of the Foreign Service, who by law, must be a Foreign Service Officer. The rotation in the job is high; there have been 13 Directors General in 28 years. The person with the title of "Director of Personnel" reports to the Director General and is also an FSO. Moreover, the four Deputy Directors of Personnel heading the major personnel functions are FSOs, as are most of the other major subordinate jobs in the personnel area.

Approved For Release 2003/02/27 : CIA-RDP86B00269R000600030001-1

This condition makes for a tendency to visualize personnel policy for the Department in terms of the needs and aspirations of the Foreign Service Corps. It results in high turnover and lack of professionalism in personnel activities. It must be changed if the Department wants to develop a professional personnel function which meets in optimum fashion its needs for special competence and continuity.

The Board of the Foreign Service is advisory to the Secretary of State on procedures and policies related to administration of the Foreign Service. It is established by Executive Order and all functions are vested in the Secretary. The Board is composed of four officials of State, one representative each from AID, USIA, Commerce, Labor and the Chairman of the Civil Service Commission. OMB has observer status. The current chairman is the Deputy Secretary.

In light of the proposals herein to strengthen Departmental personnel management, the role, functions, and membership of the Board of the Foreign Service should be reviewed. Its main continuing function might be to advise the Secretary on cross-agency aspects of overseas representation and reporting by the Foreign Service. Perhaps it should be given a wider role in advising on executive development and cross-agency exchange and training.

The Commission recommends that:

Responsibility for Department-wide personnel management functions should be centered in the Deputy Under Secretary for Management, who should be made Under Secretary.

A modern, professional personnel function should be established at the Department level, with a Director reporting to the Under Secretary for Management. His task would be to see that viable careers are developed within all personnel categories and that all systems work to the full benefit of the Department.

The Director General of the Foreign Service should report to the Director of Personnel and should focus upon the administration of the high mobility officer component (FSOs) within prescribed Departmental policy.

The Board of the Foreign Service should be reviewed and reoriented to a new cross-agency mission as discussed above. The Under Secretary for Management should lead the review and be designated Chairman of the reconstituted Board.

The Under Secretary for Management should be responsible for developing, for the Secretary's approval, an annual Department manpower plan as a vehicle for determining the needs for and deployment of people and skills over 3–5 years.

The Policy Planning Staff should play a key role in developing for the Secretary's approval basic guidance as to the policy direc-

Approved For Release 2003/02/27 : CIA-RDP86B00269R000600030001-1

tions, shifts in deployment emphasis at overseas posts, and critical competences to be acquired.

Executive Development. The Department needs a strong executive development program to produce the pool of career executives to fulfill its policy leadership role. The program should be based upon the following key principles:

—All personnel in all systems in the Department should have the opportunity to rise to the top career jobs in Washington and overseas based upon merit and performance.

—The GS, FSR/U, FSO, and FSS, and the major career ladders created within each, would be considered "feeder systems" leading to a Foreign Affairs Executive Service at the top (GS–16 and FSO/R, 0–2 and above).

—Jobs in the Executive Service, as designated by the Secretary, would be filled, when vacant by a special "selection-in" process involving full review of all potential candidates and recommendations by line managers and the proposed Executive Development Staff.

—Key "stepping-stone" jobs throughout the Department would be identified and used for career development purposes for candidates from all systems.

—Supervisors at home and abroad would be made responsible for identifying and developing candidates with executive potential, and the supervisors would be evaluated on the performance in this score.

The responsibility for administering State's Executive Development Program on behalf of the Secretary should be placed on the Under Secretary for Management. Based upon the experience in industry, a professional Executive Development Staff should be established reporting directly to the Under Secretary and separate from the Department's regular personnel activities. This staff, which might number 10–12, would work with the Director of Personnel and other Departmental officials in performing the following functions:

—knowing in depth the best promotion candidates in all systems in the grades just below the executive level who might be qualified for designated jobs;

—recommending to the Secretary candidates for designated executive job openings;

developing overall policy and procedures for an executive manpower system;

—assisting units of State in defining executive jobs accurately and in developing annual executive manpower reviews; and

—monitoring the operation of the program from the perspectives of the Secretary.

The Executive Development Staff must be highly competent, objective professionals, and perceived as such throughout the organization. They are not kingmakers. Their recommendations on filling designated executive jobs, however, would supplement those of Department managers and would be based upon independent and extensive investigations, including interviews with the candidates, their subordinates, their peers, and their supervisors. This procedure would provide the Secretary with a new viewpoint in the selection of executive talent.

We further believe that the executive search and development process in State is so important that it should look beyond the confines of the Department. State's Executive Development Staff should be aware of high potential candidates for the Executive Service from other agencies and from outside the Government. This staff should also actively create and monitor interagency assignments and private sector exchanges for State personnel which contribute to the broadening of experience.

Presidential appointments to key Departmental posts including ambassadors, would continue to be made from the White House. It is assumed, however, that the President would build his selection process on State's Executive Development Program and would use the pool of career executive talent to a large extent in making such appointments.

The Commission recommends that:

The Under Secretary for Management should establish an Executive Development Program administered by a professional staff reporting directly to him (outside but related to regular Personnel functions).

Promotions to designated executive jobs (largely FSO–2 and GS–16 and above) should be subject to special procedures of a Foreign Affairs Executive Service (FAES).

Candidates would be "selected in" to executive jobs in the FAES by the Secretary on the basis of recommendations from line managers and the executive development staff.

The purpose of the Executive Development program would be to find the best talent from all categories within the Department based on the Secretary's defined needs. It should be part of a community-wide approach.

IMPROVING THE FOREIGN SERVICE CAREER

The Foreign Service, the most prestigious element of the State Department, was established as a professional service by the Rogers Act of 1924. Two basic elements of its British model were incorporated into the U.S. version: (1) recruitment by examinations which meas-

Approved For Release 2003/02/27 : CIA-RDP86B00269R000600030001-1

Approved For Release 2003/02/27 : CIA-RDP86B00269R000600030001-1

ured "generalist" talents, and (2) recruitment at university graduating age. These fundamentals—together with "rank-in-the-man," promotion based on merit, and selection out—have formed the basis of the present-day service.

The Service currently has just under 3500 officers, representing about 28% of State's total Americans, and 44% of its professionals. Unlike most Personel systems the Service is not a pyramid tapering to the top. The largest classes are in the mid-career (05–03). 20% are in the senior levels, 02 and above (this compares with .5% in the military services). Senior levels exceed the numbers in the junior levels, distribute (as of December 1974) over the various ranks as follows:

Career ambassadors and ministers		47	Senior levels (665)
Senior threshold:	01	271	
	02	347	
	03	609	Middle levels (2,181)
	04	836	
	05	736	
Junior threshold:	06	280	Junior levels (566)
	07	215	
	08	71	
Total		3, 412	

The FSO strength analyzed at a different time is distributed over six "cones of specialization" as follows:

	Number	*Percent*
Executive/program direction	342	10
Political	1, 210	35
Economic/Commercial	813	23
Subtotal, substantive cones	2, 365	68
Consular	484	14
Administrative	608	18
Special (medical, etc.)	8	--
Total	3, 465	100

The Service is essentially a closed system with relatively few lateral entrants at middle grades or above. In the last five years, lateral entrants have averaged about 100 per year, most of whom have been transfers from within the Department. Moreover, the Service is highly selective in its entrance requirements. For example, in FY 1974, 9,300 took the written foreign service exam; 1,300 passed; 400 took the oral exam; and 144 entered the Service.

Major issue areas related to our proposed strategy are discussed below.

Rank-in-the-man. A key characteristic of the Foreign Service is the so-called rank-in-the-man, where individuals are promoted not because they hold jobs of certain responsibility, but because their records indicate to peers that they have over the years equalled the standards of the Service.

The rationale for rank-in-the-man appears to be threefold: it is best suited to a high mobility service where the jobs are considered to have very similar elements. It also reflects the needs of a disciplined service in manning hardship posts and where there must be rotation to achieve equity of treatment. It provides flexibility, since officers can be assigned to jobs below their personal rank based upon the needs of the government without penalizing their careers. In general, it provides personal security in a highly transient business and permits spreading officers of a more uniform competence over posts which vary in hardship and professional demands.

The current rank-in-the-man system is appropriate to an overseas high mobility service. But problems arise with such a system, limiting its overall usefulness:

(a) A tendency exists to assume that all jobs are the same, leading to loose position description and classification and making more difficult the effective match of man and job. This situation encourages overgrading and reduces the control that "positions" provide in the numbers of people in senior ranks.

(b) Less emphasis is put on performance in these jobs and on accountability for results.

(c) Supervisors tend to have less say about who they are given by a centralized assignment system and thus have less accountability for building an effective team to do the job.

(d) Overt criteria are lacking as a basis for performance rating, except "cooperating" and "staying out of trouble."

Thus, the rank-in-the-man system is not a panacea for all personnel in the foreign affairs community. It is a device to be used sparingly for the specific purposes for which it is best suited. For example, with average tours of 2–3 years, it wreaks havoc with many Washington headquarters assignments where the need is strong for greater substantive depth, continuity, and bureaucratic skill. Aside from the military, most of the Government and all of the private sector use rank-in-the-job systems—fully 96% of the U.S. labor force.

Several important modifications need to be made in the rank-in-the-man approach to amerliorate some of its worst features.

First, we believe that the Service should operate on a rank-in-the-job basis at the top similar to that of the CIA and the military. In such an approach, after an officer has reached 03, his further promotions would only be based upon selection by management into specific jobs in the Foreign Affairs Executive Service which are classified at 02, 01, or above. Once in the Service, promotion would be based on performance and job openings.

Approved For Release 2003/02/27 : CIA-RDP86B00269R000600030001-1

Approved For Release 2003/02/27 : CIA-RDP86B00269R000600030001-1

Second, it may be desirable to adopt in the Executive Service some of the features being considered by the CSC for the Federal Executive Service—for example, the fixed term contracts renewable at the election of both parties. If the Government does not renew the contract, the officer would have the election of retiring (with 20 years or more service), or accepting a job at the top career level (03).

Third, to increase the focus on achievement, the use of the annual work statement should be explored. This statement (sometimes called a "job contract") would be developed by the officer and his supervisor to indicate the specific goals and areas of emphasis required for good performance in the job. Evaluation at the end of the year would focus on performance relative to these goals. This practice is increasingly used in industry and has been introduced by CIA.

We recommend that:

A substantial improvement be made in job description and classification practices for all positions in the field and in Washington. This is a prerequisite for responsible personnel management.

Rank-in-the-man should run only through 03. All promotions to 01 and 02 should be related to specific jobs.

Greater emphasis should be placed on performance and accountability in the job through annual work statement.

The Service should adopt some form of "climate analysis" or reverse appraisal to get a better understanding of officer views of the performance of supervisors.

Functional Competence in the Service. How much functional competence can or should be built into an FSO system heretofore generalist in outlook? There is no simple answer; but functional specialty should be emphasized as much as the individual and the system can take consistent with the basic mission of representation and foreign assessment. Such specialization should be achieved through entrance procedures, lateral entry, and job experience and training.

The cone system as an administrative device does appear to encourage and nurture a limited degree of special competence at least for the short run. But it hardly produces the full range of special knowledge at posts overseas, or more importantly, in Washington. For example, economics as offered in the FSI 26-week course provides basic tools that all FSO's in substantive jobs require. However, modern foreign policy analysis requires far more intensive specialties at home and abroad; such as in petroleum economics, international monetary system and banking, labor economics, agricultural economics, technology exchange, and trade promotion. FSO's should be encouraged to develop some measure of these deeper skills.

Solid incentives must be built into the FSO career pattern to encourage "self study" in needed specialties. To this end there should be a one-year program to be designed by individual officers at mid-career to deepen substantive knowledge.

We recommend that:

The cone system should be continued (although the program direction cone would be rendered superfluous by the executive development recommendations). Its basic purpose is to protect the consular and administrative activities as viable career specialties and to continue to upgrade the economic competence of the Service. Its continued effectiveness should be reviewed from time to time.

All political officers should have the 26-week FSI course in economics or its equivalent. The techniques, as well as substance, are essential to good policy analysis.

Over time, the distinction between political and economic cones should be dropped. Economics today provides a major context to all international relations.

Intercone assignments should be increased where the purpose is to broaden experience, rather than to accommodate an excess of political officers. The exchange should be a two-way street where Consular and Administrative officers receive political assignments.

Officers should be given incentives to pursue deeper substantive issues of foreign policy. They should be rewarded for initiative (self study) and excellence in their chosen fields through promotions, assignments in their chosen fields, awards, and mid-career work-study programs.

Recruitment. Methods of recruitment should be overhauled and professionalized as a Departmental function. Moreover, the process should be made much more effective both at the junior level and for lateral entrance to acquire the needed, qualified people. The Department must define far more clearly the type of people and characteristics it wants and develop an effective new recruitment strategy to broaden its appeal to ability groups and to increase the responsiveness of the intake process. Junior professional recruitment should be on a Department-wide basis, with the opportunity to choose between predominantly headquarters or overseas service after two tours of satisfactory performance.

We recommend that:

The Board of Examiners should be abolished and the Department establish a professional recruitment capability within its personnel management function.

The examination procedures, written and oral, should be revised

Approved For Release 2003/02/27 : CIA-RDP86B00269R000600030001-1

Approved For Release 2003/02/27 : CIA-RDP86B00269R000600030001-1

to place more emphasis on testing aptitudes, creativity, and analytic capabilities than specific knowledge. New techniques being employed in industry can be adopted for this purpose.

The time from examination to entrance into the service should be sharply shortened to fit more nearly the needs of high-quality applicants.

The Department should systematically interview officials of colleges and universities to determine whether the Foreign Service is obtaining the best qualified students from among those who might be interested in a foreign affairs career.

More weight should be given to recruiting people at graduate level or who have demonstrated desired competence in specialties, especially those with economic training and experience.

The Department should review entering salaries and take steps to ensure that the Foreign Service is reasonably competitive with other areas of Government and industry for the kind of talent it seeks.

For the first two tours of duty, or through the 06 level, Departmental entrants should be on probationary status. Following careful screening and the junior threshold review, the individual would be given tenured officer status.

The individual should be able to opt at this point for a predominantly Washington or mobility career and for his area of specialization.

Lateral transfers should be actively recruited—particularly of people with demonstrated economic or appropriate technical expertise.

Promotion, Assignment and Selection Out. The present promotion system based upon the rankings of all individuals in a class by peer panels based solely on written records is ineffective, costly, and perhaps counterproductive. We agree with the five Task Forces in *Diplomacy for the 70's* which concluded that "the present highly competitive promotion system tends to stifle creativity and promote conformity." The cost, including loss of productive work, involved in gathering promotion panels for the various classes and cones is high. With good recruitment process, performance ratings in the probationary period, and the junior threshold review, the current system of almost annual reviews by promotion boards in mid-career would appear unnecessary. Moreover, the promotion by class based roughly on seniority is not far from existing practice.

In any system, adequate provision must be made for faster promotion of outstanding performers. Fast promotion should be governed by Departmental guidelines and based primarily on the recommendation of line supervisors. These could of course be reviewed centrally for accuracy and consistency.

By the same token, provisions should allow for "passing over" for promotion or selecting out those persons who do not meet standards. In light of current legal and procedural problems with selection out, the passing over of promotions may be a more effective, and equitable way to respond to less than satisfactory performance in a given period in an officer's career. This process also should be based upon the line manager reports (immediate supervisor and next higher echelon). Perhaps selection out might require substandard ratings by two or more raters and then be subject to review by a Special Review Panel now being proposed.

Assignment is a management responsibility to be taken with full knowledge of the needs of the Department and the desires of the individual. In general, line managers at home and abroad who are accountable to the Secretary for the performance of their units should have greater responsibility for personnel assignments, subject to requirements of the central process.

In the longer term, it would appear that the assignment process of rank-in-man mobility services must reckon more and more with desires of individuals for self-development and with personal and family considerations. One step in this direction would be a system of formal notification of assignments coming open in the upcoming transfer season (May-August).

We recommend that:

A new system be installed of semiautomatic promotions in the middle grades from FS 0–5 through FS 0–3. The junior threshold examination (FS 0–6 to FS 0–5) should be continued.

Provision should be made for more rapid promotion based on exceptional performance on the job, and for "passing over promotion" for those with less satisfactory performance in a given period, but who might not be eligible for selection out in the current environment.

Selection out for time in class and low performance should be continued but adapted to the semi-automatic promotion approach.

The Department should seek authority for 20-year retirement to help reduce the pressures toward overstaffing in higher grades and to permit officers who are not selected into the Executive Service to pursue second careers.

The Under Secretary for Management should exercise greater oversight over the assignment process.

Approved For Release 2003/02/27 : CIA-RDP86B00269R000600030001-1

Approved For Release 2003/02/27 : CIA-RDP86B00269R000600030001-1

A form of job posting should be adopted under which all officers are notified of assignments coming vacant and have an opportunity to make their preferences known and to participate in career planning.

Career Development. A major concern for the younger officers in the service is the nature of assignments in the early stages of the career and the long, slow progression through jobs with little policy and managerial content. Indeed, many believe this midcareer problem to a major impediment to effective development and retention of bright young officers.

Various solutions to this problem must be considered:

First, the most important improvement to the FSO career at junior and middle echelons would be to slim the top of the Corps, halt the overgrading of jobs, and to place real responsibility earlier in an officer's career. This change will help officers develop earlier and indicate those with potential for the top.

Second, a large number of jobs in the service need not be manned by the college-trained, generalist officers and can be filled more effectively from other sources. The Department may have gone too far in blanketing routine jobs into the Service. This determination can only be made on the basis of job-by-job analysis.

Third, assignments to other executive agencies and the private sector at mid-career levels can provide the variety of programmatic and managerial experience required. This broadening should also include assignments to Congress, foundations, industries, labor unions, state and local governments to fit the FSO for the role he must play in today's world. This arrangement is not an easy prescription to carry out; but it must be done as a part of a vigorous Executive Development Program.

It is recommended that:

All FSO jobs should be rigorously reexamined to determine which can be reclassified downward and made available to more junior officers. This should apply to ambassadorial and DCM positions.

Routine jobs at the bottom of the Service should be reviewed to be sure they require university trained "generalists." Those jobs which do not should be filled from other sources of talent as appropriate.

The 200 or so stepping-stone jobs which provide managerial experience should be clearly identified and husbanded for developments of those with indicated management potential.

More assignments should be made outside the Foreign Service for the Department in jobs with managerial and programmatic content. State should take initiative to reinvigorate and expand the exchange programs underway.

All DCM's at larger posts (Class I and II) should have had a prior tour of duty with significant management experience in or out of State.

"Leave-without-pay" service outside the Executive Branch in activities which broaden managerial or functional experience should be encouraged, and the service outside should count for purposes of promotion and retirement. Such services could include industry (e.g., petroleum, banking), foundations, universities, congressional staffs, or state and local governments.

The detail of FSO's to state and local governments should be effectively implemented under the Pearson Act. (This will require changes in the law and appropriations limitations.)

For high performance/potential officers, a new program should be mounted for deepening functional competence through one-year period of work-study at mid-career levels (12–15 years in the service), to be designed by the officers involved, with guidance and approval by the Department.

GOVERNMENT-WIDE APPROACH

A President with responsibilities for the conduct of foreign relations in today's world must be concerned with the quality of people and effectiveness of personnel management beyond the State Department. This concern recognizes the increasing importance of other Foreign Affairs and "domestic" agencies in this arena.

The Foreign Affairs Agencies. Four agencies comprise this category: AID, USIA, ACDA, and ACTION. All have separate personnel systems, but are under the general policy supervision of the Secretary of State. Many of the foregoing considerations and recommendations relating to the State Department and the Foreign Service also apply to AID and USIA (e.g., relation of mobility elements to Washington functional experts recruitment, promotion, selection out, executive development, etc.) and particularly to the FSIO's of USIA. However, even though their personnel systems are closely related to those of the State Department, there are major issues relating to personnel management in AID and USIA which require separate attention.

AID is in the painful process of shrinking its work force to fit several conditions: the reductions in levels of development lending; greater [illegible] personnel and country nationals in implementing technical assistance initiatives; and the withdrawals from Southeast

Approved For Release 2003/02/27 : CIA-RDP86B00269R000600030001-1

Approved For Release 2003/02/27 : CIA-RDP86B00269R000600030001-1

Asia. When completed, AID management hopes to have a slimmed down agency in line with program and foreign policy directions. The short-term problem is to accomplish the reduction in force (RIF) without completely demoralizing key personnel.

AID's greatest problem in personnel management lies in the uncertainties as to the future of the Agency. If one wanted to create a difficult context to try to attract and retain high-quality development professionals, it would be hard to outdo the present situation. AID has no permanent authorization. Each year Congress debates the very existence of the program, and for four out of the last five years did not pass an authorization or appropriation bill until well into the year in question, relying instead on continuing resolutions.

A recommendation in Chapter 5 suggests that AID continue to be the State Department operating arm for the implementation of bilateral assistance, including security, development, and disaster relief programs. The forms and techniques of AID may change over time. The sectoral emphasis may shift as they have in the past (from agriculture, to health, to population control, etc.), the countries of concern may vary, but it is hard to conceive of a nation of wealth and economic and technological know-how without substantial involvement in bilateral aid.

We recommend that:

The executive branch and Congress should undertake a comprehensive assessment of the role and scope of the economic development program. An effective personnel program cannot be operated in the present conditions of uncertainty. It is a propitious time to reexamine AID's longer-term mission.

If the program is to be continued, AID or its successor agency should develop a "compatible" but separate personnel system designed to attract and retain high-quality development professionals.

USIA is currently an independent agency reporting to the President. In Chapter 9 we have recommended combining information and cultural activities, now carried out by the State Department and USIA into a new autonomous agency called the Information and Cultural Affairs Agency (ICA). The Director of ICA would report to the Secretary. Press relations programs would be transferred directly to State, and VOA would be established with its own Board as a separate entity.

The principal personnel issue stemming from the foregoing proposals is whether the FSIO's should continue to be administered as a separate but related service under the jurisdiction of the Director of ICA, or whether they should be administered as a new cone in the FSO Corps. Treating FSIO's as a cone of State's Foreign Service would tend to emphasize the close relationship to the Department and theoretically make the interchange of assignments easier. It might give the FSIO's a better chance at becoming a DCM and Ambassador. However, we believe that the arguments for a separate but related personnel system somewhat outweigh those for amalgamation. USIA has generally been a better administered agency whose Director pays considerable attention to the assignment and development of personnel. Its smaller size (only 900 FSIO's) worldwide means that its personnel problems are more manageable. Also, its function is essentially a specialty of its own.

Until the State personnel management capability is considerably improved, we conclude that USIA (ICA) personnel functions, like budget and administration, should remain separate. The proposed conal amalgamation always remains as a future option.

We recommend that:

USIA's personnel system, under the new agency we have proposed, should continue as a separate system with "compatible" regulations. FSIO's should not be merged as a cone of the FSO Corps. The new agency should develop the unique kind of staff required to coordinate and manage the increasingly important exchanges and contracts through private channels.

The "Domestic" Agencies. The so-called "domestic" agencies have entered the world of international relations in a large way. Today, some 6,600 employees of domestic agencies serve in international activities on a full-time basis in Washington and overseas. Perhaps 5,000 of these can be considered involved in a policy rather than an operational capacity. Of the 5,000 total, 3,000 are considered professionals, and 250 are at executive levels, GS-16 or above.

Most of the major Departments have Offices of International Affairs, some headed by Assistant Secretaries. Most carry on extensive contacts with foreign governments, professional groups, and individuals either from locations abroad or from headquarters. Many more people in these agencies have part-time or intermittent concern with international activities.

Several of the Agencies, notably Agriculture and Treasury, have distinct personnel services related to international activities. They tend to recruit university graduates for a career entirely within the international area. The international careerist, usually with a primary background in economics, is put through a planned career path which includes initial headquarters experience. On the basis of performance in this area, the individual is selected for a tour abroad, followed by alternating tours at higher levels, both at home and abroad as Agricultural (430) or Treasury (34) attachés. The overseas tours may be in several countries. Language and country training is increasingly stressed, and is obtained through the Foreign Service Institute. By

Approved For Release 2003/02/27 : CIA-RDP86B00269R000600030001-1

Approved For Release 2003/02/27 : CIA-RDP86B00269R000600030001-1

and large, the professional quality of the people is high, and these attachés serve as valued members of the embassy staffs, usually within the Economic section. The attachés are Civil Service employees and do not have many of the benefits of the Foreign Service. The question of "diplomatic status" has been a frequent matter of contention between these agencies and the State Department.

Commerce and Labor have similar, though not as well developed, international services. Their activities in the foreign area are growing, particularly in Commerce, with the emphasis on trade promotion, East-West trade, and technology exchange. These agencies however, do not have separate services for persons abroad; the commercial and labor work is performed by FSOs. (Commerce does have about 15 trade fair directors overseas.) Personnel exchange programs are in effect with both agencies (the Commerce-State exchange runs about 20 people each way).

The time has come to give more systematic attention to the quality of these "domestic" international functions. They are important contributors to the substance of foreign policy. The President is best served if they are strengthened.

We recommend that:

The President should direct key domestic agencies (through the Secretary of State, OMB, and the Civil Service Commission) to take steps to strengthen their personnel systems in order to participate more effectively in the development and execution of foreign policy.

General rules and standards should be issued to guide development of a family of compatible, agency-run systems.

The Foreign Affairs Executive Corps. The importance and complexity of foreign policy development and implementation today requires experienced, broadly trained executives. The need is evident for a more comprehensive approach to this problem; i.e., developing a government-wide pool of such executives who can direct staff and line operations in the international arena. A President can no longer assume that executive talent will be available to develop imaginatively and to administer sensitively the foreign policy required. He cannot assume that job experience in any one agency "feeder" system, or subsystem, is broad enough to permit handling the streams of variable which will confront the foreign affairs executive.

An initiative in foreign affairs executive development is urgently needed. The populations are small enough to work with (some 2,150 out of 10,000 Federal executives). The President's special concerns for international relations are clear. Moreover, one cabinet officer, the Secretary of State, has leadership responsibility in the area and "owns" a large portion of the "assets."

Our study has identified about 2,155 *executive level jobs* (supergrade or FSO–2 and above) in the foreign affairs area as follows:

	Washington	*Overseas*	*Total*
State	562	479	1, 041
Other Foreign Affairs agencies	445	401	846
Other departments and agencies	236	32	268
Total	1, 243	912	2, 155

All but about 100 of the above are career officials.

We recommend that:

The President designate certain executive jobs and the men who hold them as part of a Foreign Affairs Executive Service. The designated jobs would be filled only after a systematic executive search across the various agencies' feeder systems.

The President should instruct the Head of each Agency involved to improve Executive Development Programs within his agency, based on policy guidelines to ensure that each "feeder" system makes an optimum contribution to the government-wide approach.

Prime responsibility for support to the President in implementing the Foreign Affairs Executive Service would be placed in the Secretary of State, under a Presidential charter. It would be accomplished largely through expansion of the Executive Development Staff reporting to the Under Secretary for Management.

This staff should also organize an annual executive manpower review to monitor progress of agency programs and key individuals with executive potential.

Legislation may eventually be required to give the government-wide function more teeth. However, we believe it could operate initially as outlined within existing law, relying on the President's general responsibilities as Chief Executive and for conducting foreign policy.

The way in which the State Department reacts is important to the success of this program. If agencies believe that all the best jobs go to the Foreign Service Offices, there will be little interest in the system. The key will be the perceived quality of the candidates and the fairness of State's administration of these activities.

The Foreign Affairs Executive Service could be staffed from the Executive Office of the President rather than the Department of State. This approach has substantial organizational logic. But Congressional history, the desirability of placing responsibility in a Department with

Approved For Release 2003/02/27 : CIA-RDP86B00269R000600030001-1

Approved For Release 2003/02/27 : CIA-RDP86B00269R000600030001-1

an adequate charter, and the climate of the times support putting the function in State.

The Foreign Service Institute (FSI). Improving the quality of personnel and executives across the government in international affairs will depend very heavily on the FSI. The FSI should be considered a national training institution operated by State to meet the needs of all agencies in this field. Its curriculum should be reviewed and developed accordingly. Its effort should be coordinated with some of the management training offered by the Civil Service Commission and the universities.

We recommend that:

The FSI program should be expanded to handle the principal language and foreign affairs training for all agencies. Its name should be changed to Foreign Affairs Institute (FAI) to recognize the broader mission.

The funding of FAI should be made entirely reimbursable with State and other participants paying their share of the costs in the form of tuition. A revolving fund should be established to permit financial planning on a long-term basis.

Steps should be taken to provide better FAI facilities in the Washington area. Appropriations should be sought for this purpose.

State should develop a process for providing an annual statement of training requirements and for evaluation of performance in meeting those requirements.

The current Director has done a commendable job and deserves strong Department support in developing plans for the new mission and facilities. When the position does become vacant, a new Director should be sought nationwide in an effort to find a person of distinguished attainments in foreign policy administration, both as a practitioner and educator.

The faculty mix should be altered to include more members from relevant graduate schools who have demonstrated ability to work with experienced adults; some should also come from other training centers engaged in development of public and private executives. This is not a job for FSOs.

EMPLOYEE-MANAGEMENT RELATIONS

Recent developments in employee-management relations (EMR) in many ways add to the inflexibilities and uncertainties of effective personnel management in the foreign [illegible] perspective in this complex field, the Commission conducted, through consultants and staff, an extensive review of history and operations under the relevant Executive Orders.

From the point of view of effective personnel management, the compromise arrangement which led to E.O. 11636 has not in general worked well, and the future problems under the order will probably grow. What was intended originally as continuing consultation within the family of the Foreign Service is fast becoming a complex adversary, legalistic personnel governance system where the lines between management and the "union" are hard to find. The need again is to foster a truly departmental management position in dealing with EMR matters.

Management Role. The State Department was slow in organizing itself to handle employee-management relations. It has not yet developed the professional expertise and continuity required. A small Employee-Management relations (EMR) office is attached to the Director General. However, The American Foreign Service Association (AFSA), which is at once a professional organization and the employee representative organization, has tended to ignore this office and to deal directly with senior levels, and the Department let this happen. Moreover, it has never been clear who in the Department senior levels was in charge of EMR. The Deputy Under Secretary for Management and the Deputy Secretary have dealt with various issues depending on whom AFSA approached.

The Role of the Board of the Foreign Service. The Board was chosen as the keystone of the EMR system apparently because it seemed to fit its policy responsibilities related to the Foreign Service. However, it has proven particularly ill-suited to labor relations. Its members, particularly the majority of seven from the foreign affairs agencies, have little experience in labor relations. It has fashioned no machinery to keep itself alerted to upcoming issues, has inadequate staff for these purposes, and has not monitored sufficiently the consultation among the three foreign affairs agencies.

Conflict of Interest. The employee-management procedures for both E.O. 11491 and E.O. 11636 were made for the traditional rank-in-the-*job* employment systems rather than a rank-in-the-*man* system such as the Foreign Service. The distinction between management and employee is almost impossible to define in the latter. Most of the senior officials of the Department—that is, management—are members of AFSA, the employee agent. All would benefit from concessions to AFSA relating to overseas benefits which are under the Secretary of State's jurisdiction. Thus, FSO's serving under special Presidential appointment sit on both sides of the employee-management table in the "consultation" situation, a situation which does not fit established

Approved For Release 2003/02/27 : CIA-RDP86B00269R000600030001-1

Approved For Release 2003/02/27 : CIA-RDP86B00269R000600030001-1

practice in the labor-relations field. It does not conform to the role the Foreign Service wants to play (the diplomat-manager) in supporting the Secretary and the President. It certainly does not adequately protect the public.

The Commission concludes that the best interests of all parties would be served by exempting at least the Presidentially appointed FSO's from the adversary, bargaining arrangements of E.O. 11636. In this sense, the original position of the Department requesting an exclusion of the Foreign Service from E.O. 11491 appears to have been correct.

Foreign Service Officers operating in disparate posts abroad do have a right to express their needs collectively through negotiators who represent the best qualities of the Service. This representation could continue to be done by AFSA, not as an agency-wide, exclusive bargaining agent, but as a professional organization. Individual grievancies could be handled through the existing Grievance Panel or some similar arrangement.

Consultation. In the Department's employee-management procedures, consultation has become an adversary proceeding where the Department's personnel manual is considered the "contract." All Manual changes are checked with AFSA; where AFSA opposition is known, delay and paralysis in the personnel function results. To remedy this problem the Executive Order should be clarified so that the management of the three agencies cannot be stopped from taking action on any pending matter whose "consultability" is being urged by the employee organization. Moreover, management must be free, without prior consultation, to change personnel policies and practices in areas reserved for management under the Order.

Rolling Negotiations. The system of item-by-item negotiations based on the Executive Order's provision for regular consultation should be amended to provide for more comprehensive written agreements over a fixed period. This change would help reduce the confusion which arises from the large number of agreement understandings being processed piecemeal in the Department at any one time. Moreover, contrary to good labor-management practice, the agreement once signed can be reopened under pressure from the employee organizations.

Only one solution would appear to deal adequately with the foregoing problems, is administratively simple, and fits longer term needs. We recommend an approach along the following lines:

Revoke E.O. 11636 as it now stands.

Continue to exempt Foreign Service Officers as Presidential appointees from the main provisions of E.O. 11491.

Extend a similar exemption to FSIO's and FSR's of the three agencies—i.e. all rank-in-the-man professionals.

Provide for representation of the above officers through AFSA, or other organizations, as professional associations.

Provide all other employees of State, AID, and USIA representation and bargaining rights under E.O. 11491.

At the same time, Department should take appropriate steps to improve its ability to cope with employee-management relations, including:

Establishing a single focal point in State for mobilizing the necessary management resources to conduct effective EMR: the proposed Under Secretary for Management, supported by an experienced professional staff with continuity.

Enforcing the use of this Office as the management channel in dealing with employee organizations.

Clarifying its EMR policies.

It is not easy to roll back the clock. But there are times when this must be done, when the alternative is to proceed in a direction which may be harmful to all parties. It is not clear, for example, that the present drift toward making AFSA an agency-wide industrial type "union" is in the long-term interests of Foreign Service Officers. There would appear to be longer-term costs, not only to the prestige of the FSO Corps in Congress and the public but also to the effectiveness of its members as a part of foreign affairs management.

If a separate Executive Order for Foreign Affairs agencies is deemed necessary, a new Executive Order is recommended to strengthen the program along the following lines:

The Board of the Foreign Service should be taken out of the employee-management relations business. In its place, general oversight should be given to a new seven-man Foreign Affairs Council composed of representatives of State (two members including the chairman), AID, USIA, Labor, CSC and OMB who have expertise in the EMR field. The council would be advisory to the Secretary as to the operation of the EMR system and as to policy required to make the system work.

The Disputes Panel should continue to settle all cases brought, subject only to review by the heads of Foreign Affairs agencies.

There should be provision for fixed-period contracts, thus eliminating the current "rolling" negotiations.

Interagency consultation requirements should be strengthened.

Approved For Release 2003/02/27 : CIA-RDP86B00269R000600030001-1

Approved For Release 2003/02/27 : CIA-RDP86B00269R000600030001-1

Discretionary benefits should be removed from the bargaining either by amending the Order or by assigning the determination to OMB, CSC, or some agency outside State.

CONGRESSIONAL-EXECUTIVE RELATIONS AND THE ORGANIZATION OF CONGRESS

Approved For Release 2003/02/27 : CIA-RDP86B00269R000600030001-1

Approved For Release 2003/02/27 : CIA-RDP86B00269R000600030001-1

CHAPTER 13

EXECUTIVE-CONGRESSIONAL RELATIONS

Looking to the problems ahead, the Commission believes that a new era of cooperation between the executive and legislative branches in foreign relations is vital to the security of our nation and to the peace of the world. We need a new unity in the government that builds, both at home and abroad, a renewed spirit of confidence.

In the first 12 chapters of this Report, we have sought to anticipate future challenges to American foreign policy. We have analyzed the need for adaptation of current organizational arrangements within the Executive Branch to help meet those challenges in the best interests of the American people during the years ahead.

In Chapter 14, the Commission will address itself to the need for changes in the organizational arrangements of Congress that will strengthen the Congressional role in the conduct of foreign policy.

We have noted two future challenges to American foreign policy, and the need to improve current organizational arrangements to meet those challenges. The first is that the major foreign policy problems of the future will increasingly arise from the tightening economic and physical interdependence of nations. The second is that problems of interdependence will sharply affect the domestic economy of this country and therefore merge with domestic political issues, but the processes of our foreign policymaking are still too much designed as though foreign and domestic policy are distinct.

These two perceptions place a special burden on the Commission to examine Congressional-Executive relationships, and the internal organization of the Congress. The Commission believes that, even with respect to the traditional diplomatic and national security issues of foreign policy, the Congress until recently has deferred excessively to executive leadership, and allowed some of its powers to lapse. The Executive filled the vacuum created by Congressional deference. We have examined how a better balance might be struck without constitutional surgery or excessive reliance by Congress upon its power of the purse. We have been guided in our search for improvement by our view of the probable issues of the future, not by an attempt through organizational means to correct mistakes of the past.

If we are correct in believing that the foreign policy agenda of the future will be less concerned with such traditional questions as the

Approved For Release 2003/02/27 : CIA-RDP86B00269R000600030001-1

Approved For Release 2003/02/27 : CIA-RDP86B00269R000600030001-1

recognition or non-recognition of foreign regimes, the overseas basing of U.S. forces, or levels of supporting assistance to allied governments, and focused more on the newer problems of global resource access, labor migration, commodity pricing, the relations of currencies, protection of the global environment and the like, then foreign policy will far more intimately affect domestic politics and the domestic economy. It will touch the American public more directly, and will involve the Congress to a greater degree. Moreover, the Constitution gives the Congress the sole power to regulate commerce with foreign nations. As that commerce becomes central to our foreign relations, the Congressional role must inevitably grow. The Congress, then, must be prepared to play, effectively and responsibly, a broader role than before in those issues with both foreign and domestic dimensions.

This conclusion seems to be at least broadly accepted by the Congress itself. From November 1973 through June 1974, the Commission conducted an extended survey of the views of Members of Congress on the making of U.S. foreign policy. (The survey is presented as Appendix M to this report, which also includes a listing of the major political and foreign policy actions of the period.) A number of views expressed in the survey will be referred to in this report; the central themes of the survey responses were a deep dissatisfaction with the role of Congress in the making of foreign policy, the desire that Congress play a larger foreign policy role, despite an acceptance of the major direction of U.S. foreign policy.

Under the Constitution, the Congress and the executive share important responsibilities with the executive in regard to foreign policy—war powers, treaty powers, and the appointive process. As we have already noted, Congress has the sole power to regulate foreign commerce, but in practice substantial powers have been delegated to the executive. In order to meet these responsibilities there must be genuine communication and a full flow of information between the two branches of government. The exercise of these shared responsibilities in an increasingly competitive and complex world places an extraordinary burden on the executive and legislative leaders of this great democracy.

We seek balance and effectiveness in the future conduct of our international relations. We seek no radical shift in power between the branches. The Commission believes that in the future, as in the past, the executive branch must conduct our relations with other countries. In fulfilling his constitutional responsibilities the President must have the flexibility to negotiate effectively and provide responsible leadership in meeting international demands of increasing complexity. But to provide for a fuller sharing of responsibilities in that broad region where both branches must act together, [illegible] the Congress can fulfill its constitutional responsibilities to participate in the formulation and implementation of foreign policy, we make suggestions of two kinds. This chapter discusses those concerning the relation of the executive to the Congress. The next proposes several means of strengthening the capacities of the Congress to meet its expanded role and enlarged responsibilities. The Commission notes that the Congress has already made substantial progress in dealing with both issues. Indeed, many of our recommendations seek merely to strengthen or qualify steps already taken or proposed.

TOWARD A MORE EFFECTIVE SHARING OF AUTHORITY AND RESPONSIBILITY

Both the Constitution and the political realities of our system require that major issues of foreign policy be resolved only on the basis of shared participation and responsibility between the Congress and the executive. The Commission offers a number of proposals to facilitate that sharing. These are offered in the knowledge that, historically, whenever there has been a shift of influence from one branch toward another, the shift has initially been accompanied by conflict and excess. The Commission does not believe that Congressional control of foreign policy is an appropriate remedy for executive control, or that either can act alone. The Commission believes cooperation is requisite if the nation is to deal steadily, thoughtfully, and responsibly with the broad and complex range of foreign policy concerns now before us. The basic theme of these proposals, therefore, is to seek new ways in which the President and Congress participate jointly in the formulation and maintenance of policies responsible both to the exigencies of the outer world and the concerns of the American electorate.

WAR POWERS

Probably the greatest source of friction and misunderstanding between the Congress and the executive branch in recent years has been the heated controversy over the President's use of the armed forces in hostilities abroad. The Commission has reviewed the efforts already made to ensure shared responsibility and joint action with respect to the Nation's war powers, and it endorses the principles of P.L. 93–148, enacted in 1973 and known as the War Powers Resolution, though it recognizes that there may be constitutional questions to be resolved. It does so in the belief that the Resolution is in keeping with the intent of the Founding Fathers and the public expectation, rooted in that intent, that Congress participate in the decisions of war and peace. The Resolution establishes procedures for the President and Congress in the exercise of war powers and is designed, through reporting and consultation requirements, to result in an early sharing of responsibility for such decisions.

Approved For Release 2003/02/27 : CIA-RDP86B00269R000600030001-1

Approved For Release 2003/02/27 : CIA-RDP86B00269R000600030001-1

There appear to be public misconceptions about the Resolution's purpose. The most concise statement of Purpose is recited in the legislation. We quote:

> "It is the purpose of this joint resolution to fulfill the intent of the framers of the Constitution of the United States and insure that the collective judgment of both the Congress and the President will apply to the introduction of United States Armed Forces into hostilities, or into situations where imminent involvement in hostilities is clearly indicated by the circumstances, and to the continued use of such forces in hostilities or in such situations."

The first tests of the Resolution have come in the past few months. Pursuant to its requirements, reports were submitted by the President to the Congress concerning military evacuations at Da Nang, Phnom Phen and Saigon, and the recovery of the merchant ship, *Mayaguez*, and its crew. All four reports, filed as required within 48 hours after armed forces were introduced, involved military operations of an emergency nature and of short duration. As a result, only the consultation and reporting sections of the Resolution have been tested.

If the War Powers Resolution is to produce increased cooperation between Congress and the executive branch, there must be a willingness on the part of the executive to consult with Congress and a Congressional willingness to assume new responsibilities for the sensitive and urgent decisions concerning the use of force abroad. In the discussion of a new Joint Committee in the following chapter we suggest one device for assisting the Congress to meet those responsibilities.

EXECUTIVE AGREEMENTS

A second source of confrontation and dispute in recent years between Congress and the executive branch has been the use of sole executive agreements with foreign governments. "Sole executive agreements" are international agreements not concluded as treaties or as executive agreements to which Congress has concurred, but by executive action alone. Some agreements have made or implied commitments to foreign countries concerning matters for which Congress shares constitutional responsibility. Some have required appropriations of money or the use of armed forces or have altered terms of an existing treaty.

The Commission believes that the advantages to the executive for freedom to enter into such arrangements must be balanced against the necessity for public awareness of them and the opportunity, through the Congress, for review and recourse as to their terms. Congressional views, as the survey earlier referred to indicates, are similar. Two recent developments should be helpful in bringing about a more cooperative system for the formulation and implementation of international agreements. The Department of State has revised its regulations concerning these agreements. They now provide that there should be consultation with Congressional leaders and appropriate committees whenever there is a question whether an international agreement should be concluded as a treaty or by executive agreement. If this procedure is followed, Congress will have an early opportunity to comment upon proposed sole executive agreements and to examine the constitutional authority for such agreements along with its own constitutional responsibilities.

In 1972 Congress enacted a law on the transmittal of U.S. agreements to Congress (1 U.S.C. Section 112(b)), requiring that the text of all executive agreements be submitted to Congress within 60 days after they are concluded. Special provisions were made for transmittal of executive agreements on a confidential basis when, in the opinion of the President, disclosure would be prejudicial to national security.

The Commission believes that these executive and legislative actions would be strengthened, and shared responsibility for international agreements further assured if Congress made clearer its view as to when the nation is committed to assist another nation by use of armed force, or material or financial resources. The Senate provided precedent for this in 1969 in enacting Senate Resolution 85 on "National Commitments," and again in 1970 when it passed a resolution concerning the Spanish Bases agreement, stating that nothing in that agreement "shall be construed as a national commitment by the U.S. to the defense of Spain."

Rather than relying upon its power of the purse or using a case-by-case basis for proclaiming its opposition to a particular sole executive agreement it seems advisable that:

> *The Congress should adopt, by concurrent resolution, a statement that a national commitment—meaning a promise to assist a foreign country, government or people by the use of the armed forces or financial resources of the United States, either immediately or upon the happening of certain events—results only from affirmative action taken by the Legislative and Executive Branches of the United States Government by means of a treaty, statute, or concurrent resolution of both Houses of Congress specifically providing for such commitment.*

EMERGENCY POWERS

The scope of a third set of executive powers, and the procedures appropriate to their use should also, we believe, be established by the Congress. These are the far reaching powers deriving from national emergencies. As the work of the Special Committee on the Termination of the National Emergency has shown, four Presidential proclamations of national emergency are currently in effect. Of these, two—declared in 1950 by President Truman in response to the Korean

Approved For Release 2003/02/27 : CIA-RDP86B00269R000600030001-1

Approved For Release 2003/02/27 : CIA-RDP86B00269R000600030001-1

conflict, and in 1971 by President Nixon to implement currency restrictions and enforce controls on foreign trade—were generated by problems of foreign relations.

Pursuant to these proclamations, over 470 provisions of federal law have come into effect, delegating extraordinary authority to the executive. The actual emergencies have now ended, but the formal states of emergency endure and the country remains, in effect, in a state of emergency rule. The matter is no mere technicality: the prolonged continuation of such powers diminishes the constitutional role of Congress in foreign policy, and puts at unnecessary risk the Constitutional balance of government.

The Commission believes, therefore, that:

*The national emergencies should be terminated by law and that all statutes delegating authority in time of national emergency should be repealed or revised to conform to the provisions of the proposed National Emergencies Act.**

The Commission further recommends that:

Any future declarations of national emergency should specify the statutory powers required to meet such an emergency; that all national emergencies should be terminable at any time by concurrent resolution or by Presidential proclamation; and that in the absence of extension by Congress, provision should be made for termination.

EXECUTIVE PRIVILEGE

As Congressional responses to the survey questions indicate, many Members of Congress appear deeply concerned about the inadequacy of its information relating to foreign policy issues. A number of the recommendations made in this report seek to address that problem. Here we address two of its aspects: first, executive privilege; then the security classification system.

Despite recent changes in attitudes of both the Executive and Congress concerning the sharing of information, the possibility of future constitutional confrontations, particularly over information relating to the formulation and implementation of foreign policy, has led the Commission to explore means to avert or diminish that possibility. The Commission is mindful that any request by Congress for information may present a direct conflict between the right of Congress to know and the duty of the President to protect the national interest and the confidentiality of his advice.

*We assume that non-emergency legislation and certain other statutes that cannot be immediately repealed will be retained until Congress enacts appropriate new legislation. In its actions thus far on emergency legislation Congress has followed this practice.

The Commission therefore believes it useful to note a number of general principles, and to recommend the establishment of certain clarifying procedures.

We believe that a claim of executive privilege with respect to matters within the purview of the executive departments should be asserted only by the President personally. When so asserted, any such claim should be considered carefully and respectfully both by the Congress and, if the matter should come to litigation, by the judiciary. There are kinds of information—involving, for example, confidential advice, or information received under assurances of confidentiality, or matters properly subject to claims of individual privacy—which present a substantial basis for claims of executive privilege. On the other hand, Congress has a right to the fullest access to information necessary for the fulfillment of its own constitutional responsibilities in the making of national defense and foreign policy.

We believe, therefore, that:

Congress should establish procedures to limit the occasions for dispute between the two branches, and to provide for the swiftest resolution of conflicts should they arise. These procedures should regularize the process whereby either House or a committee of either House may seek information. They should also establish the steps whereby, if that information is denied and the House or committee in question should deem the claim of privilege unjustified, the matter can be referred to the federal courts for expeditious resolution.

A CLASSIFICATION SYSTEM BASED ON STATUTE

One assertion on which virtually all informed observers of the conduct of U.S. foreign affairs agree is that far too much information has been classified, classified too highly, and classified too long. As a result of the wide consensus on this point, a number of corrective actions have recently been taken, most notably the Freedom of Information Act Amendments of 1974. These reforms, however, have not touched what we regard as the root of the problem; namely, that the current classification system operates without any statutory basis. We believe that procedures so important and potentially so dangerous as those which restrict the ability of a free people to review the operations of its own executive departments must be defined and circumscribed by law. We believe, moreover, that the provisions of such a law, while fully responsive to the executive's legitimate requirements for secrecy in foreign policy, should balance those interests more evenly against the nation's rights to examine what is being done in its name and why.

Accordingly:

We propose that the Congress consider legislation establishing

Approved For Release 2003/02/27 : CIA-RDP86B00269R000600030001-1

Approved For Release 2003/02/27 : CIA-RDP86B00269R000600030001-1

a comprehensive system for classification based on the following guidelines:

—The mandatory classification, in one of several degrees of classification, of specified types of information relating principally to the national defense and the sources and methods of intelligence.

—The mandatory exemption fom classification of other specified types of information, relating principally to U.S. actions in violation of U.S. law.

—The discretion, lodged in appropriate officials, to classify or exempt from classification all other information on the basis of specified criteria which balance the need for secrecy against the potential value of disclosure.

—A comprehensive system of automatic downgrading and declassification.

—The application of specified sanctions to persons violating the terms of the system, including criminal penalties for the unauthorized release of properly classified information, and significant administrative sanctions applicable to overclassification.

—The availability of legal process to resolve any questions arising from classification decisions.

Oversight of this system, we believe, should become the responsibility of the Joint Committee on National Security proposed in the following chapter, or if such a committee is not established, of the appropriate standing committees of the House and Senate.

CONGRESS AND THE APPOINTMENT PROCESS

In recent years the Senate Foreign Relations Committee has made several changes in the process of confirmation of Ambassadors and other foreign policy officials designed both to improve the competence and suitability of nominees, and to insure their greater responsiveness to later inquiries from the Congress. The Commission strongly endorses these measures. It believes that nominees should be questioned closely concerning possible conflicts of interest and political contributions, and that, as the Committee now requires, they should assure their willingness to later appear in order to provide requested information and, with proper safeguards of confidentiality, to express personal as well as administration views. Every effort should be made by both the executive and legislative branches of our government to insure that every ambassador sent abroad has the ability and the qualifications to represent our country with distinction.

In both the review of candidates and in the consideration of nominees, the Senate should continue to require of persons under consideration familiarity either with the country to which the nominee is to be accredited, or experience in the formulation or practice of U.S. foreign policy, or some other substantial and relevant set of qualifications.

INCREASED USE OF REPORT-BACK AND TIME-LIMIT PROVISIONS

Our final recommendation on the sharing of responsibility for foreign policy between the two branches of government relates to Congressional responsibility for the review and oversight of policies and programs. This is a subtle and complex process, not a mechanical one. Much of the most effective oversight is necessarily performed informally and depends upon good working relations between the two branches. Nevertheless, we believe that the expanded use of two specific devices should prove useful.

The Commission recommends greater use of report-back requirements for both executive testimony and written reports from executive officials to the Congress, and more frequent incorporation of statutory time limits in proposed legislation, particularly on new programs and policies.

At present, executive officials rarely know when, whether, or how they will be required to account to the Congress for their actions in implementing particular foreign policy programs or policies. The use of statutory provisions incorporated in authorizing legislation, specifying the times at which executive officials should expect to appear before appropriate committees to report on program performance would better assure both timely executive attention to program review and evaluation, and more considered and regular performance by Congress of its own oversight responsibilities. Similarly, greater use of statutory provisions automatically terminating program and policy authority in the absence of Congressional renewal establishes a schedule of regular and substantial Congressional review.

Achieving a better relationship between the executive and Congressional branches is not enough. Indeed, by requiring more of the Congress, such a balance simply increases the need to ensure that the Congress is organized and equipped to meet its new responsibilities effectively. The following chapter addresses those needs.

Approved For Release 2003/02/27 : CIA-RDP86B00269R000600030001-1

Approved For Release 2003/02/27 : CIA-RDP86B00269R000600030001-1

CHAPTER 14

CONGRESSIONAL ORGANIZATION AND PROCEDURES

In the previous chapter we have addressed the changing relation of the Congress to the executive in foreign affairs. The effect of our recommendations—as of the inevitable trend of events—is to place a greater burden on the Congress. But new responsibilities may require improved capabilities. We turn now, therefore, to consideration of changes in the organization and procedures of the Congress which might assist the Congress to meet its growing foreign affairs responsibilities. We begin with three aspects of the roles and functions of Congressional committees.

MODIFICATIONS OF COMMITTEE JURISDICTION

Since economic relations seem certain to constitute a growing proportion of future foreign policy, the Commission has considered at some length how to improve the ability of the Congress to consider economic questions in the light of their foreign implications. We conclude that some further adjustment in Committee jurisdictions may be helpful.

In the House we propose that the Committee on International Relations be accorded "special oversight functions" over reciprocal tariff agreements, in addition to its other responsibilities for trade policy issues.

Moreover, we believe it important that, with increasing reliance on foreign trade instead of aid, and with greater use of international financial organizations to dispense foreign aid funds:

The House Committee on International Relations should exercise concurrent legislative oversight over international financial organizations, together with the House Committee on Banking and Currency.

Two related recommendations appear in Chapter 11. One proposes that the Foreign and International Relations Committees should have some opportunity to comment on estimates of the Appropriations Committees. The other suggests that, in both Houses, those two committees should be represented on the Budget Committees.

Approved For Release 2003/02/27 : CIA-RDP86B00269R000600030001-1

Approved For Release 2003/02/27 : CIA-RDP86B00269R000600030001-1

We believe that these changes will substantially improve the ability of the House to act on foreign economic issues with a greater awareness of their implications for our relations with other countries as well as of their domestic significance.

In the Senate, Committee jurisdictions in the foreign affairs field seem more nearly satisfactory. The Senate Foreign Relations Committee has considerably broader jurisdiction than the Committee on International Relations, including "measures to foster commercial intercourse" and international financial institutions. The rules of the Senate, furthermore, provide far greater jurisdictional flexibility allowing the referral of legislation to two or more committees. However, Senate committee jurisdiction and workloads have not been systematically reviewed for nearly 30 years (the last review culminated in the Legislative Reorganization Act of 1946). And despite the heavy workloads which spread Senators far too thin, the number of subcommittees has increased since then from 34 to more than 120—many with overlapping foreign policy responsibilities. This tendency to proliferate subcommittees, the Commission believes, defeats one of the main purposes of the Legislative Reorganization Act.

Moreover, while precise congruence between House and Senate jurisdiction is not essential, recent House changes affecting foreign policy matters may suggest useful adjustments in the Senate.

From the point of view of improving Congress' ability to consider foreign policy matters efficiently and effectively, therefore, a review by the Senate of its own committee system now seems appropriate. The Commission strongly recommends such a review.

THE USE OF SUBCOMMITTEES

The Commission has noted the increased use of foreign policy subcommittees in the Congress. Subcommittees have distinct advantages over full standing committees as working units. They can respond more quickly to changing developments. Their procedures can be relatively informal, facilitating the exchange of views among Members and between Members and witnesses. They present greater opportunities for Members to develop expertise and to establish direct relationships with executive branch officials. Finally, they facilitate the holding of joint hearings, both within and among committees of the House and Senate, thus improving coordination in the Congress, and at the same time reducing the multiple demands for testimony from key executive officials.

Even in the Senate, where competing demands make it especially difficult for Members to participate fully in all the subcommittees to which they are assigned, hearings and preliminary deliberations by two or three interested Senators in subcommittee may be preferable to less frequent and detailed deliberations at the full committee level. In short, despite practical limitations, particularly in the Senate, active subcommittees can increase both the scope and depth of Congressional consideration of foreign policy matters.

The Commission therefore recommends fuller utilization of subcommittees to strengthen the basis of committee action, and to provide greater interchange with working-level executive officials at the Assistant and Under Secretary levels. It also recommends increased use of joint hearings by subcommittees to meet part of the need, expressed clearly in Congressional responses to the survey, conducted by this Commission, for better coordination of the actions of the Congress in the foreign policy field.

In view of the growing links between nations, and the growing importance of problems—like resource access, arms sales, oceans policy, food and population—which affect many states, the Commission believes that subcommittees on foreign affairs may be most useful if organized on a functional rather than a regional basis. The Commission therefore commends the experimental use of such functional subcommittees by the Committe on International Relations, and the creation of a Foreign Assistance and Economic Policy Subcommittee by the Foreign Relations Committee.

A NEW JOINT COMMITTEE

However useful the recommendations above concerning committee jurisdictions may prove, and however powerfully they may be reinforced by the proposals made below concerning committee staffs and analytic support, those recommendations leave untouched at least two major problems. One is that since political, military and economic aspects of foreign policy have become interlocked—and since many foreign and domestic policy issues undoubtedly will become so—Congress should contain some forum in which those interrelations can be directly weighed. This is particularly true in time of crisis when specialized standing committees, pressed for action, might benefit from help in appreciating how particular aspects of policy decisions relate to those being considered by other committees.

The second is that the Congress is requiring increased consultation with senior foreign policy officials of the executive branch at the same time that an increasing number of specialized committees are necessarily concerning themselves with the foreign policy aspects of their responsibilities. The result is the potential for a burdensome and unsustainable demand on senior executive officials for multiple appearances before Congress—a problem particularly severe when fast-moving events require the full and direct attention of the same officials in the conduct of policy.

Approved For Release 2003/02/27 : CIA-RDP86B00269R000600030001-1

Approved For Release 2003/02/27 : CIA-RDP86B00269R000600030001-1

Neither speed nor policy coordination are Congress' particular strengths—nor can they be. The greatest strength of the legislative process is its unique ability to explore alternatives and to weigh and resolve widely disparate points of view. Its strength in deliberation however, does not relieve Congress of responsibility for reasonable efficiency and coordinating capacity. Indeed, if Congress is to play the greater foreign policy role which this Commission endorses, those capacities will increasingly be demanded of it. And as the staff survey of Congressional views indicates, most Members, while regarding policy coordination primarily as the responsibility of the executive, also favor changes to improve Congress' own efficiency in the coordination process.

With these problems in mind, the Commission considered a number of proposals. It concluded that a single innovation may be materially helpful.

In the Commission's view, a Joint Committee on National Security should be established. It should perform for the Congress the kinds of policy review and coordination now performed in the executive branch by the National Security Council, and provide a central point of linkage to the President and to the officials at that Council. In addition it should take responsibility for Congressional oversight of the Intelligence Community.

We believe this Committee should serve as the initial recipient and reviewer of reports and information from the executive branch on matters of greatest urgency and sensitivity directly affecting the security of the nation. It should advise the party leaders and relevant standing committees of both Houses of Congress on appropriate legislative action in matters affecting the national security, and should assist in making available to them the full range of information and analysis needed to enable them to legislate in a prompt and comprehensive manner.

The existence and activities of such a Joint Committee should in no way substitute either for direct consultation between the President and Congressional party leaders, or for the regular legislative and investigative functions of the present standing committees in each House. Rather, it should supplement these—providing a more systematic and comprehensive exchange of information, analysis and opinion than has proved possible under the existing committee and leadership system.

For both operational and security reasons, the Joint Committee should be small—containing not more than 20 Members. It should include the leaders of the key foreign, military, and international economic policy committees from each House, and several Members-at-Large appointed by the party leaders to represent them and to enhance the Committee's representativeness of the Congress as a whole.

The Commission recommends that the Joint Committee be vested with the following specific jurisdictions and authorities:

—*Receipt, analysis and referral (along with any recommendations it may consider appropriate) of reports from the President under the War Powers Act.*

—*Receipt and review of analytic products of the intelligence community.*

—*Oversight (in conjunction with the executive branch) of the system of information classification discussed above.*

—*Establishment and maintenance of facilities and procedures for storage and handling of classified information and materials supplied to the Congress.*

—*Establishment of a code of conduct to govern the handling by Committee members of classified or sensitive information.*

The successful experience of the Joint Committee on Atomic Energy illustrates the usefulness of legislative authority in helping assure a Committee's effectiveness. The Commission does not recommend that the proposed Joint Committee be vested with broad authority to report proposed legislation to the House and Senate. In general, any legislative recommendations of the Joint Committee should be reported to relevant standing committees for their consideration. The Commission finds, however, two narrow and specific areas in which the Joint Committee might usefully have authority to report legislation directly to the floor of each House just as the Joint Committee on Atomic Energy is empowered to do.

We propose that the Joint Committee:

—*Consider the creation of a statutory system of information classification, and (if intelligence oversight is assigned to it).*

—*Be granted authority for annual authorization of funds for the intelligence community.*

The Commission believes strongly that more systematic arrangements for Congressional oversight of the intelligence community are needed on a permanent basis. It believes that such oversight should be conducted by a Joint Committee of the Congress, and preferably [illegible] of reviewing intelligence products and activities in the context of our total foreign policy. The Commission therefore believes

Approved For Release 2003/02/27 : CIA-RDP86B00269R000600030001-1

Approved For Release 2003/02/27 : CIA-RDP86B00269R000600030001-1

the proposed Joint Committee on National Security would be the appropriate body for that task.

In the event that this Committee is not established, however, the Commission recommends that a Joint Committee on Intelligence be established to assume the task of Congressional oversight of the intelligence community.

The Commission well understands that establishing a Joint Committee on National Security, and making it function effectively, would be difficult. While the Congressional survey indicates majority support among Members for greater joint efforts in Congress, it also suggests many doubts and practical problems. The Commission has carefully considered these difficulties. It concludes, nevertheless, that the likely impact of the Joint Committee upon Congress' capacity to play a more meaningful foreign policy role fully justifies the efforts and concessions necessary to create it and to make it work.

CAPACITIES FOR EVALUATION AND REVIEW

The Commission believes that the necessity for closer supervision of foreign programs and policies is not limited to the intelligence field. Many programs outlive the circumstances which made them useful, and we expect that in the future, as the world changes at increasing rates, many more will do so. We believe, therefore, that the Congress must meet far more systematically than before its responsibilities for the evaluation and review both of major programs and of the policies on which they are based. The expanded use of time-limit and report-back provisions, discussed in the previous chapter, should contribute to that end. We offer here several additional proposals.

More Effective Use of Reports. Increased efforts should be made to consolidate, rationalize, and improve the quality and use of written reports to Congress from executive branch agencies required by law. At a minimum, we believe that:

A central Congressional repository for such reports, efficient procedures for making them available to all interested Members, and convenient means for maintaining security of classified reports, should be developed, as proposed above, by the Joint Committee on National Security.

Attaining the Promise of CRS. Equally important is the availability of supporting analytic resources to supplement committee staffs. Over the last several years Congress has substantially expanded the Congressional Research Service, strengthened the General Accounting Office and created the Office of Technology Assessment and the Congressional Budget Office to supplement its other facilities. But this rapid growth in research capability has still not provided Congress with adequate research and informational capacity on foreign policy issues. The central problem, we believe, is that the Congressional Research Service has never reached the levels of usefulness that either the Congress or CRS itself have sought. Despite more than a doubling in size since 1970, a substantial growth in committee requests for policy research, and the imaginative use by CRS of automated information systems, the relationship between CRS and the Congress is characterized on both sides by a certain amount of frustration. Researchers lack the freedom and support to address major policy issues in depth; the Congress lacks assurance that CRS will provide timely and useful studies of program alternatives.

The Commission finds that the major difficulty is that there exists no body representing the interests of the Congress as a whole and authorized to provide CRS with policy guidance, assistance in securing resources, and some measure of insulation against the lower priority concerns which deflect it from sustained work on major issues.

The Commission therefore recommends that Congress designate the Joint Committee on Congressional Operations as responsible for performing those functions, thus insuring that some part of the CRS staff is able to focus steadily on issues to which Congress as a whole accords high priority.

The General Accounting Office and International Organizations. The Commission believes that the GAO, working with executive officials, can usefully assist international organizations to develop more comprehensive capabilities for financial review and program evaluation. The objective review by the Congress of the work of international organizations should form the major basis for the support of such organizations as they come to play increasingly important roles. Meanwhile, the Congress should continue to press, through both executive branch representatives and GAO, for more adequate accounting of international programs to which the U.S. has contributed, and for better information on the work and effectiveness of international organizations.

More Effective Use of Analytic Resources. The remaining deficiencies in Congressional use of program information and research result, we believe, from insufficient central supervision of its own growing resources, and relatively low levels of Congressional use of independent non-governmental sources of analysis. Accordingly:

The Commission recommends that the House Commission on Information and Facilities, created as part of the Committee Reform Amendments of 1974, look with special care at the research support available to Congress when legislating in foreign policy. We also suggest that the [illegible] Commission seek better management of Congressional use of research by designating the Joint Committee

Approved For Release 2003/02/27 : CIA-RDP86B00269R000600030001-1

Approved For Release 2003/02/27 : CIA-RDP86B00269R000600030001-1

on Congressional Operations to oversee research organizations; and that it seek to facilitate wider use by the Congress of the policy research capabilities of universities and non-profit research centers.

One ready means of helping to achieve this last goal would be for the Foreign and International Relations Committees periodically to publish a summary of their research interests and priorities. The summary should specify the major questions pertinent to future foreign policy determinations on which the Congress would most welcome assistance, and should note the major study requests from foreign policy committees to CRS. Such a document, we believe, would encourage many public and private research organizations to orient planned research toward Congressional interests and concerns, and thus to increase the availability of independent analysis and information useful to the Congress without need for additional research bureaucracies.

The Commission recommends the publication of such a summary of Congressional foreign affairs research interests.

Congressional Staff Support. One of the most important developments on Capitol Hill since World War II has been the creation of a professional staff to help the Congress in its consideration of significant policy issues. Prior to Legislative Reorganization Act of 1946 the committees of Congress dealing with foreign policy had little or no professional assistance. Committee reports—as well as speeches and background materials for the Congress—were normally prepared in the executive branch of the government or by outside sources. As a result, Congress was simply not equipped to discharge its responsibilities effectively.

Since their inception in 1947, the professional staffs on Capitol Hill have grown considerably in size. This has been a necessary development for two reasons: the growing complexity of foreign policy problems; and the increasingly heavy legislative burdens that have fallen on all Members of Congress and the resultant need for staff help in all areas.

Both the Senate Foreign Relations Committee and the House International Relations Committee have by custom hired professional bipartisan staffs. The Commission notes, however, that this tradition has been eroded somewhat in recent years as divisions over foreign policy have developed both within the major political parties and between them. In particular, the authority of the committee staff directors has diminished as their ability to recruit their own staffs has been limited. The present practice is for members of the Committees to request that one staff member be assigned to them alone. Whatever the merits of this procedure, the Commission believes that committee staff members should be appointed because of their professional qualifications and be available to serve members of both parties as the need arises. This principle should prevail whether or not the committee chooses to designate minority and majority staff members.

The Commission understands the desire of many Members of Congress for more professional assistance. This is especially true of some junior members of the Senate and House whose status in those bodies does not entitle them to very much staff support. In this connection, we note the recent action of the Senate to enable junior members to employ the professional assistance they need to handle their major committee responsibilities. We caution that the benefits of this action will not be worth the costs in lowered professional standards if staff directors do not have some voice in the hiring of such staff.

The Commission has no general recommendations to make with respect to congressional staffing, but makes two further observations. First, in any further expansion of congressional staff the emphasis should be on quality rather than quantity. Clearly the Congress should not seek to duplicate the vast array of professional talent found in the executive branch; it should emphasize *good* staffs rather than *large* ones. Second, the Commission believes it advisable for the Congress to add some expertise in the fields of international economics and in the relationship between science and technology and foreign policy. These are fields which will engage the attention of Congress increasingly as the years go by.

E. *Increasing Attentiveness to Foreign Affairs.*

We conclude our observations on the Congress and foreign affairs with three proposals intended to better equip Congress and the public to deal knowledgeably with a world in which foreign affairs in all aspects will touch our lives more powerfully and directly than heretofore.

International Contact. The Commission believes that substantial international contacts, by familiarizing Members of Congress with overseas conditions and foreign perspectives, have a beneficial effect upon the making of U.S. foreign policy and on the ability of Members to perform their legislative responsibilities wisely.

In the judgment of the Commission, more extended travel by Members, the preparation of special reports based on staff travel abroad (particularly Foreign and International Relations Committees investigative staff), and increased travel by teams of Members rather than individuals are highly desirable.

Full, written reports by staff and Members prior to and following travel abroad, as required by [illegible] under Foreign Relations Committee rules, are particularly valuable in helping assure coordinated,

Approved For Release 2003/02/27 : CIA-RDP86B00269R000600030001-1

Approved For Release 2003/02/27 : CIA-RDP86B00269R000600030001-1

purposeful travel and a broad sharing of findings among interested Members and staff.

Foreign travel reporting requirements should be extended to the entire Congress, and an improved system of circulating, monitoring, and evaluating these reports developed.

Policies issued in 1974 by each House regarding financing of staff travel might serve as a model and first step toward more comprehensive guidelines.

The Commission endorses detailed and timely financial disclosure, in a form conveniently accessible to the public and the press, of the costs of all foreign travel and the sources of travel funds, whether utilized by Members of Congress or other Government officials.

Congressional Participation in International Negotiations. Similarly, the Commission endorses greater participation by Members of Congress in international negotiations, particularly multilateral negotiations, as an important means of increasing the first-hand information available to Members on foreign policy and its conduct. With the possible exception of Congressional delegates to the annual meetings of the UN General Assembly, however, we believe the roles of Congressional participants in such negotiations should ordinarily be limited to those of observers and advisers rather than plenary participants, particularly in cases where agreements growing out of such negotiations may be subject to specific Congressional review or approval. Congress might usefully specify the appropriate degree of advisory participation of Members in important international negotiations in the legislation directing or authorizing such negotiations.

Public Understanding of Foreign Policy Issues. At many earlier points in this report we have stressed the importance we attach to the development and articulation of guiding conceptions of U.S. purpose and policy in the world. We have proposed a number of measures designed to encourage greater attention to this need in the executive branch. But Congress has an important parallel function to perform.

Through carefully organized hearings Congress can provide the critical review of U.S. purposes, and of their relation to shorter-term policy, necessary to test their soundness and coherence, and to generate the public understanding and support without which, in the end, they cannot succeed.

The Foreign and International Relations Committees have a special responsibility in this regard. History suggests, moreover, that the public will respond positively to the thoughtful and probing review of major foreign policy issues; the China Policy hearings of the Senate Foreign Relations Committee in 1966 provide an excellent model.

Those hearings, moreover, demonstrated the importance of television coverage. The Commission believes that public awareness of foreign policy questions requires television coverage of major foreign policy hearings and Committee deliberations.

We recommend that:

Recent trends toward opening the deliberations of Congress on major foreign policy issues be encouraged. Committee hearings should routinely be open for television. At the discretion of the House and Senate, under their respective rules, consideration should also be given to making floor debates on major foreign policy issues available to public and commercial television on a case-by-case basis.

The Commission believes that whatever strains on the normal functioning of Congress might occur as a result would be more than offset by increased public understanding of the foreign policy issues facing the nation, and by public support for some of the difficult choices ahead.

Approved For Release 2003/02/27 : CIA-RDP86B00269R000600030001-1

Approved For Release 2003/02/27 : CIA-RDP86B00269R000600030001-1

ANNEXES

Approved For Release 2003/02/27 : CIA-RDP86B00269R000600030001-1

Approved For Release 2003/02/27 : CIA-RDP86B00269R000600030001-1

Annex A

COMMENTS AND SUPPLEMENTARY VIEWS

Approved For Release 2003/02/27 : CIA-RDP86B00269R000600030001-1

Approved For Release 2003/02/27 : CIA-RDP86B00269R000600030001-1

Supplementary Statement of Congressman William S. Broomfield

In the spirit of candor, objectivity, and tolerance of dissent that has characterized the deliberations of the Commission, I have received permission from the Chairman, the Honorable Robert D. Murphy, to have the following supplemental statement included as an annex to the Commission Report.

The submission of these remarks should not be construed as either dissent from the bulk of the Commission recommendations or as criticism of the manner in which the Commission has conducted its important business. During my association with the Commission I have consistently been impressed with the professionalism and fairness of the Chairman, the members, and the staff.

The purpose of this statement is to register my strong opposition to the Commission recommendations on "Public Diplomacy", especially as they pertain to the reorganization of United States Information Agency (USIA) and increased autonomy for the Voice of America (VOA); to underscore my strong support for the establishment of a Joint Committee to oversee intelligence activities; and to offer some comments regarding the Defense Intelligence Agency (DIA) and the military attaché system.

The Commission on the Organization of the Government for the Conduct of Foreign Policy, in Chapter 9, has endorsed the recommendations of the Stanton Panel to restructure the United States Information Agency by (a) giving greater autonomy to the Voice of America, (b) creating an Information and Cultural Agency (ICA), on the model of the Arms Control and Disarmament Agency (ACDA), to handle our "long-range" public diplomacy and (c) incorporating USIA's daily informational activities into a new State Department Office of Policy Information.

I endorse the Stanton Panel findings citing the importance of our public diplomacy effort and the substantial achievements of USIA in this field. I acknowledge that the current relationship between Cultural Affairs (in the State Department) and USIA is cumbersome and ineffective. However, I have yet to see any convincing evidence that the Stanton recommendations on the reorganization of USIA would increase the effectiveness of our informational activities overseas. I maintain that, if implemented, they might well lead to bureau-

Approved For Release 2003/02/27 : CIA-RDP86B00269R000600030001-1

Approved For Release 2003/02/27 : CIA-RDP86B00269R000600030001-1

cratic confusion and neglect of this important aspect of our diplomacy. Specifically, I would cite the following considerations:

—There is something to be said for the continued existence of an independent agency of the United States Government concerned solely with our information policy abroad. USIA has had its problems, but by and large it has performed a difficult and thankless task in a credible, highly professional manner. If the Agency is split up and subsumed under the State Department, there is a good possibility that our informational activities overseas will receive less—rather than more—high level attention and coordination than is the case today.

—There is no good reason to assume that the Department of State could manage an expanded, world-wide information apparatus more effectively than the United States Information Agency.

—The recommendations of the Stanton Panel regarding the reorganization of USIA are opposed by various professional organizations such as the American Foreign Service Organization, the American Federation of Government Employees, and the AFL–CIO. They are also opposed by several former Directors of USIA and the VOA. The State Department has yet to comment officially on them.

The proposed fragmentation of USIA functions would increase the problems of Congressional oversight and would, in all probability, result in increased costs to the taxpayer.

—The present logical inconsistencies in our public diplomacy effort can best be rectified by the simple expedient of transferring Cultural Affairs to the United States Information Agency and permitting the Agency to retain its present status.

I am particularly concerned with the proposal to grant increased autonomy to the Voice of America for the purpose of making it more "objective." I strongly believe that, as long as VOA is supported by the United States Government, it should reflect Government policy. The American taxpayer cannot reasonably be expected to support an "international CBS" or an American BBC.

I am concerned over what will happen in the future when it comes to public attention that the VOA is broadcasting to the world, at public expense, news and commentary contrary to U.S. policy or the convictions of many Americans. We could well face a situation in which VOA comes under strong public attack, with its very future in jeopardy.

While I would not object to an autonomous, privately financed VOA that could broadcast anything acceptable to its contributors, I will continue to oppose any move toward independence for the Voice as long as it is publicly supported and designed to serve as an instrument of American foreign policy.

Joint Committee on National Security. I support the Commission's recommendation (Chapter 14) that a Joint Committee on National Security be established, but believe responsibility for oversight of the intelligence community should be vested in a separate joint committee.

I will accordingly introduce legislation designed to establish a 14-member Joint Committee on Intelligence Oversight effective January 3, 1976. This proposal in no way obviates the need for the Joint Committee on National Security recommended by the Commission.

Defense Intelligence Agency (DIA)/Military Attaches. During its deliberations, the Commission devoted considerable time to the status and performance of the Defense Intelligence Agency. The Commission report, however, makes no recommendations regarding DIA and its place in the intelligence community (Chapter 7). I am not convinced that DIA, as presently constituted, is either an effective or an essential element in our intelligence effort. If the Agency is to be preserved as a separate entity, serious consideration should be given to means of strengthening it and making it more effective.

I will propose that the House International Relations Subcommittee on Oversight hold hearings this year to evaluate the mandate and performance of DIA, with the objective of identifying areas in which the Agency can be strengthened and made to operate more effectively. I endorse the Commission's suggestion to upgrade the military attache system.

Approved For Release 2003/02/27 : CIA-RDP86B00269R000600030001-1

Approved For Release 2003/02/27 : CIA-RDP86B00269R000600030001-1

Supplementary Remarks of Mrs. Charles Engelhard

To be introduced to the intricacies of the organization of our government as it is devoted to the formulation and implementation of foreign policy is to be reminded again of how complicated modern life is. To receive that introduction against the background of the events that took place between June, 1973 and July, 1975 is to understand how difficult it is to disentangle ourselves from the mistakes of the past in order to better prepare for the future. My inability for reasons of health, to participate directly in the final deliberations of the Commission at which final judgments were reached compounds my dilemma in taking a position on the commission report. Accordingly I am filing for publication with the report these supplementary remarks.

I believe the Commission has made important contributions. One in particular, which I hope will not be overlooked, is the Commission's examination of the problem of personnel management in the State Department (Chapter 12). It is refreshing to have it stated clearly that the function of the United States Foreign Service is diplomacy and that the nourishment of that ancient art is the continuing professional purpose of that Service. It is equally refreshing to see recognized the fact that proficiency in diplomacy does not automatically lead to proficiency in the management of large organizations. The Commission's recommendation to the President that he establish a Foreign Affairs Executive Service to man the heights of the foreign affairs bureaucracy appeals to me as a very helpful innovation, since Foreign Service Officers should constitute the bulk of this service, but to enter they would have to compete with others in the foreign affairs agencies.

I am sorry that the implications of this management innovation were not more consistently considered throughout the Commission report. This is particularly the case in the several discussions of economic policy, rightly considered by the Commission to be the generator of most new issues on the foreign policy agenda. In my view the Commission assigns to the State Department an unrealistic degree of responsibility for the formulation of foreign economic policy (Chapter 5).

No foreign office in a major country has that responsibility. This is because in all countries, not just ours, economic [illegible] analysts be created in the neighborhood of the White House. Given the necessarily fragmented missions between foreign policy and domestic policy. The Economic Committee of the Commission received what was to me very persuasive testimony, particularly from the Committee's Special Advisor, to the effect that in the future the Treasury Department and the Secretary of the Treasury would increasingly become the President's principal Cabinet advisor on economic policy. This is already happening, not as a result of conscious plans but rather through the force of events. I believe the time has come to recognize and assist the evolution and broadening of the Treasury Department as a kind of ministry of finance and economics in the United States and to begin to equip that department for its enlarged tasks. In international economic matters this is even more important than strengthening the State Department. Indeed, the State Department may only be effective in economic matters to the degree that it can count on the support of a strong Treasury Department.

This is a novel idea in the United States because the public does not yet perceive the Secretary of the Treasury to be the first among cabinet equals in economic policy. Yet this is increasingly the fact because in the cabinet only the Secretary of the Treasury can devote full time to economic policy in its broad aspects. The Secretary of State needs the support and the responsibilities of a strong Treasury Department in economic policy just as he needs the support and the responsibilities of a strong Defense Department in military-security policy. If in foreign policy the Secretary of State is first among equals in his relations with the Secretaries of Treasury and Defense, he can only be as effective as are the bridges built between State and Treasury on the one hand, and State and Defense on the other.

I am pleased that the Commission report leans in the direction of giving greater responsibilities to cabinet officers and urging that these officers, rather than White House staff, serve and, be seen to serve, as the President's closest foreign policy advisors. The alternative is to continue the practice of giving to the National Security Advisor and related White House offices line responsibilities for which they cannot be held accountable by the Congress. The Commission report is right in cautioning against trying to lay down the law to future Presidents about the organization of future White Houses. However, the general principle of encouraging a greater degree of "cabinet government" in the United States is one to which I adhere. For this reason such suggestions as the installation of a White House Council on International Planning (Chapter 10) appear to me to be inconsistent with the general philosophy of the report. Nor has the Commission made a persuasive case for such a Council.

I am pleased that the Commission in the end rejected suggestions [illegible]

Approved For Release 2003/02/27 : CIA-RDP86B00269R000600030001-1

Approved For Release 2003/02/27 : CIA-RDP86B00269R000600030001-1

and tasks of the intelligence community, and the fact that the most important intelligence decisions are inevitably political, the risks of over-centralization of intelligence operations in a democracy are to me greater than the risks of too little central control. It will take time to restore public confidence in our intelligence operations, but I do not believe that the time would be shortened by pretending that faulty organization was a primary cause of the loss of public confidence. Testimony before the Commission did not support such a conclusion.

On the other hand the suggestion that the Director of Foreign Intelligence have an office in the White House does seem sensible to me. This officer is now appointed by the President, subject to confirmation by the Congress. He is charged, in addition to managing his agency, with acting as "chairman of the board" of the intelligence community. He must have ready and constant access to the President to perform his duties effectively. Giving him an office in the White House underlines his dual role and also underlines the need today for continuity as well as correction in intelligence operations. I am persuaded by what I have learned in service to this Commission that this country's security has already been weakened by interruptions in the orderly work of the intelligence community, however inevitable those interruptions may have been. We must all hope that the damage is repaired as soon as possible.

In my view the Commission report pays too little attention to the greatly increased vibrance of American democracy over the past decade, the great increase in the number of legitimate participants in the day-to-day workings of the political process. Infinite possibilities lie hidden in this fact, but very real problems as well. It is not, for instance, for lack of information that our democracy has such a hard time making up its mind these days. It is that the decision making processes have become clogged both in the Executive and in the Congress.

I am sorry that the Congressional chapters (13 and 14) and chapter 8 fail to recognize these facts. These chapters discuss important subjects without, I think, asking the right questions. An important exception is the recommendation for a Joint Committee of the Congress on National Security and Intelligence. This could be a hopeful step in the direction of a better working relationship between the Congress and the Executive.

The important thing is that that relationship be kept "working," not that it be forced into a rigid pattern of legal rituals. It is natural that Congress in its effort to lessen the likelihood of a repetition of past mistakes should wish to enact new laws governing such subtle and evolving matters as Executive Privilege. Insofar as such laws illustrate principle, they may do some good and little harm. But insofar as they suggest to the public that the Federal courts should be invited into these matters (except in a Constitutional crisis) they create the impression that questions such as the information the President deems to be "privileged" should be adjudicated legally rather than resolved politically. In these matters we must look to the strengthening of our politics, rather than our legal system.

Finally, I think that the Commission's dissertation on "multi-lateral diplomacy" (Chapter 9) is rather mis-leading. If it is true that international problems will be aired with ever greater frequency in international organization, it does not follow that the character of diplomacy has significantly changed—or will do so. For the most part "multi-lateral diplomacy" is simply the extension of government-to-government diplomacy into international organizations. The difference is one of quantity more than quality, for international organizations rarely decide matters or resolve problems; rather they ratify decisions that have been negotiated previously through government-to-government channels.

It is a mistake in my view to compound organizational problems by pretending that "multilateral diplomacy" is more than it really is. I do not argue for less participation in international organizations, but for more realistic participation. This means promoting a diversity of views through a diversity of official presences, rather than a conformity of views that could result from too much State Department authority relative to other departments. The State Department should maintain firm political oversight of international organizations, but that should involve the objective of promoting a diversity of views. Too many debates in the United Nations, among other places, convey a false picture of conformity among the governments whom the debaters represent. This is possible because these organizations lack real authority, and delegations, therefore, feel they can promote the image of conformity, under such slogans as "the Third World," when in reality little real conformity exists.

These remarks should not be construed to be a formal dissent from the Commission report. On the contrary I was honored to be asked to serve as a Commissioner and welcome the publication of the report for the stimulus to public debate it should provide. One of the consequences of the "rapidly changing" world to which the Commission report so frequently refers is the difficulty of reaching consensus over a broad range of issues. That the Commission failed to do this is in my view only realistic. Earlier official reports covering the same broad ground were in general based on a broad consensus. They also were notably ineffective insofar as the implementation of their recommendations is concerned. Perhaps this Commission, by airing its different views, can in the end make a greater contribution.

Approved For Release 2003/02/27 : CIA-RDP86B00269R000600030001-1

Approved For Release 2003/02/27 : CIA-RDP86B00269R000600030001-1

Comments By Senator Mike Mansfield

With regret I must record my differences with some segments of the Report of the Commission on the Organization of the Government for the Conduct of Foreign Policy. My regret stems from several sources. I recognize how much time and attention Ambassador Robert Murphy gave to the activities which he faithfully chaired. Other members of the Commission are distinguished, busy citizens whose service in this undertaking obviously is not diminished by my disagreement with some of their decisions. My own participation in the arduous, frustrating work of editing staff-offered language necessarily had to be minimal because of my Senate duties.

My expression of personal disappointment naturally does not mean that there are not useful observations, wise comments and helpful recommendations contained in the pages of the Commission's report. On the whole, however, I fear that the ratio of effort to result has not been up to expectations. A surfeit of words masks an absence of clarity. Thin gruel is being served in a very thick bowl.

Whatever the reasons, the Commission paid little attention to the circumstances in which the legislative mandate for the Commission was created. The declared purpose was to look determinedly forward and not backward but the result is not in harmony with that purpose. In establishing the Commission, the Cominttee on Foreign Relations of the Senate called for an investigation of the mechanisms for the conduct of foreign policy at a time of intense confrontation between the executive and legislative branches of the U.S. Government. But the Commission seems to have interpreted its mandate largely as an invitation to conduct a sort of elaborate management study of certain Executive Departments, notably the Department of State.

Looking back to 1972, one has to remember that at that time the executive branch had sought to block every avenue to deny Congress a role in U.S. foreign policy, mainly in regard to Indochina. The so-called doctrine of Executive privilege had been invoked and extended to the point where it was offensive to representative government;* efforts by Senate committees to obtain information were blocked, evaded or ignored; the White House had come to a point of virtual belligerancy in its relations with the Senate Foreign Relations Committee.

One can read the several hundred pages of the Commission's report without gaining much more than an inkling of this background. That is not to imply that a partisan or institutional bias should have been the motivating force behind the Commission's work. But to ignore the atmosphere in which the Commission created represents a distortion of its purpose.

Even a cursory reading of the Commission's report is likely to impress the reader with its timidity and its paucity of substance. The Commission's mandate was to make a full and comprehensive study of all Government agencies concerned with foreign policy and to come up with recommendations which might be quite sweeping in character—including the abolition of certain "services, activities and functions not necessary to the efficient conduct of foreign policy * * *." Unfortunately, the obvious lack of any consensus among the Commissioners has meant that in the various drafts of the report it has been necessary to water down progressively every recommendation. What is left leaves much to be desired.

Perhaps most remarkable is the almost total absence—until one reaches the concluding chapters—of any consideration of the role of the Congress in foreign policy. It may be argued that there are references to the Congress scattered through the report. These often amount to little more than a passing notation that there is indeed a legislative branch of our Government. It is astonishing to discover that the first article of the Constitution of the United States seemingly has been almost overlooked in the Commission's report. It may be that the reversal of roles which has placed Article II in the preeminent position is a mere recognition of fact. If so, then the American people should be informed accordingly by this report. The entire thrust of the Commission report goes toward enshrining the preeminence of the executive branch in the conduct of foreign policy. This appears to reflect a belief that the inflated role of the Presidency should not only be continued but bolstered, notwithstanding the experiences of the last several years.

---

*See the testimony of former Attorney General Kleindienst on April 10, 1973, before three Senate subcommittees, as follows:

"Senator Muskie. I am talking about 2½ [illegible] branch: * * *

(Continued)

(Continued)

"Mr. Kleindienst. You do not have the power to compel me to come up here if the President directs me not to * * *

"Senator Muskie. Does that apply to every one of the employees of the Federal branch of the United States?

"Mr. Kleindienst. I think if the President directs it, logically, I would have to say that is correct." (p. 46, Vol. 1, Hearings on Executive Privilege, Secrecy [illegible] before the Subcommittee on Intergovernmental Relations of the Committee on Government Operations and the Subcommittees on Separation of Powers and Administrative Practice and Procedure of the Committee of the Judiciary, U.S. Senate).

Approved For Release 2003/02/27 : CIA-RDP86B00269R000600030001-1

Approved For Release 2003/02/27 : CIA-RDP86B00269R000600030001-1

The structuring of the Commission itself did little to counter the emphasis on the executive point of view. While Congressional members and appointees were named soon after the enactment of Public Law 92-352, the White House delayed its appointments process for a half-year. Moreover, far from serving as a balancing force, much of the staff talent was not used, or was diverted into "make-work" projects. Most of the material printed in the appendices apparently had almost no effect on the Commission's findings.

The Commission is made up of duly appointed members. However, on occasion, a spokesman for an absent member who, in fact, had no legal status in the Commission's study, was accorded unusual weight. This spokesman sat at the table as a quasi-alternate Commissioner, despite my relayed objections. This dubious practice had the effect of a further diminution in the consideration of the Congressional role in foreign policy.

Lack of appreciation of the role of Congress appears as early as the second page of Chapter I. An illustration is provided to underscore the supposed importance of differences in the decision-making process—and the story is both incomplete and misleading. The fact is that after the Geneva Protocol was sent to the Senate for advice and consent to ratification it was discovered that there was no clear policy on whether tear-gas and herbicides were covered, and a letter went to the President of the United States from the Chairman of the Senate Foreign Relations Committee requesting clarification. It took several years of argument before the issue was at least theoretically resolved. The renunciation of use in herbicides, in fact, did not come until well after the ending of U.S. military actions in Vietnam. It is not likely—as stated—that the decisions of the two Presidents "would have been similar."

There are typical exhortations in the Congressional report about creating a new era of cooperation between Congress and the executive branch. We have heard such language for twenty or more years. Invariably what is proposed is a one-way street. In practice, it is Congress that is expected to "see the light" and accept the executive position. Much of the discussion in Chapters 13 and 14 would not be needed if the executive branch took seriously its duty to share information and to consult fully and freely with the Congress. The pendulum has swung so far toward the executive for so long that anything like a return to a vertical position is greeted with cries of outrage from the Executive Departments. By the same token, proposals for new committees and other such devices would be seen as irrelevant if proper use were made of the existing standing committees.

This last point leads me to a discussion of the Commission's major proposal of a new "Joint Committee on National Security." This should not be confused with the idea of a Joint Committee on Intelligence—a subject to which I will return). First, the report speaks approvingly of a proliferation of subcommittees and staffs—a concept with which I entirely disagree—and then it finds that the executive branch will have problems dealing with such an increased number of power centers. So the old idea of a Joint Committee on National Security is brought out once again.

My objections to such a new committee are numerous. First, such a committee would cut across the jursidictions and tasks assigned existing standing committees and in time inevitably would decrease their authority and powers. Second, it would become a favorite tool of the executive for centralizing Congressional oversight functions and diminishing their scope. Third, the committee would have no promise of access—quite the contrary—to NSC materials and deliberations, so it would be a one-way street. Fourth, the report anticipates that the Committee would be composed of the most senior members of Congress and would squeeze out the junior members. Fifth, it would presumably take over intelligence oversight in time, but that would not be the main function and it could easily drop out of view. Sixth, it could become a barrier to the dissemination of sensitive material to standing committees, while having little or no power itself to initiate legislation. Seventh, and not necessarily finally, giving such a committee control over report means control over information and soon over action; a "super-committee" might easily fall under executive dominance and reduce the overall authority of the Congress.

The Commission report reiterates time and time again themes like interdependence, the inter-relationships between foreign and domestic policies and the importance of economic issues. One might think these themes only recently discovered, instead of ideas we have long considered truisms. They certainly do not justify the creation of some amorphous Joint Committee on National Security.

Although the discussions of war powers, executive agreements, executive privilege and comparable topics are relatively brief, they do raise questions that require answers not yet forthcoming from the executive branch. In my view, Congress should move slowly on the issues of executive agreements and executive privilege: in the first case because before legislating we need further information, which even the State Department apparently does not possess; in the second case because I am fearful of giving the Presidency under the rubric of Congressional reform more power than the office now has under the Constitution. As for the war powers resolution, however, I believe there is every reason to press the executive vigorously on the consultation and reporting sections of the law. These have been tested several times in recent months and the executive responses have been far from adequate.

[illegible] conference, I would strongly emphasize the fact that both the executive and legislative branches have been

Approved For Release 2003/02/27 : CIA-RDP86B00269R000600030001-1

Approved For Release 2003/02/27 : CIA-RDP86B00269R000600030001-1

inexcusably lax in supervising intelligence activities. But I am also disappointed with the Commission's findings in this regard. After giving a brief outline of the "intelligence community" the report goes on to make some modest suggestions which represent little if any advance over the conclusions of the Rockefeller Commission, which had a substantially more restricted mandate. Everything is accepted as given and some delicate tinkering with the machinery apparently is considered a sufficient response to the profound issues which have emerged in this connection.

It is intolerable that the public should still be burdened with a swollen, expensive and inefficient intelligence "community." Since the Defense Intelligence Agency (DIA) was established in the early 1960s to consolidate and replace the several military intelligence agencies, I recommend that the task be accomplished and the latter abolished as soon as possible. If the Service chiefs say that is impossible, then the DIA should go out of existence forthwith as an expensive redundancy.

I would also recommend that the National Security Agency (NSA), thousands of employees larger than the CIA, be dramatically reduced in size—especially so long as each of the armed services maintains its own cryptologic agency.

My belief is that the CIA, with all its blemishes, remains at the heart of our intelligence operations. A full house-cleaning must be undertaken as the facts come in (obviously some may never be known) and the agency's standing thereafter at the center of the intelligence community should be restored and strengthened. I agree that the Director of Central Intelligence (DCI) should be given enhanced control over coordinating intelligence and should have the fullest access to the President. I do not, however, agree that a White House office is needed or is desirable for that purpose—it would be far too seductive a place for the DCI. While the DCI's deputy clearly must take over more of the running of the CIA, I believe the time is long overdue to make both officials civilians. The practice of having either one a military man began a generation ago when the CIA was just beginning; it is no longer necessary or desirable especially when virtually every other intelligence component is run by military officers.

To accomplish the necessary restructuring of the so-called intelligence community I would look primarily to the Senate Select Committee on Intelligence. Thereafter, I would hope to see the creation of a Joint or Senate Committee on Intelligence, which was first proposed twenty-one years ago. Such a Committee should have the most extensive oversight powers possible, it should include members of more recent vintage in its ranks. There might very well be, moreover, a limited term of office (on the order of four to six years) for members serving on such a Committee.

Finally, on the intelligence issue, I must register my dissent from two propositions in the Commission's report. Granted there is a certain logic in renaming the CIA the Foreign Intelligence Agency, the accompanying implication that we need a "domestic intelligence agency" is distasteful and subject to misinterpretations; the frequent name changes experienced by the Soviet KGB also cause me to reject such a course. Secondly, I disagree with the Commission's views of the President's Foreign Intelligence Advisory Board (PFIAB) which has long been of dubious value as an impartial reviewing agency. It would be easier, cheaper and logical to abolish it.

With the several exceptions described briefly above, I would like to associate myself with a number of Supplementary Remarks of Commissioner Engelhard. This is especially the case with her views on the value of the Commission's effort to strengthen the departments and the cabinet, on the proper balance between State and Treasury on economic policy responsibilities, and on the cliches surrounding the phrase "multilateral diplomacy." At the same time, I would warn against stressing the importance of economic events and the need for economic "experts" to the point where they become fads.

In conclusion, I would repeat my belief that there are a number of useful ideas and observations in the Commission's report, but that they seem to me too few in volume and significance to have justified all the time, effort and money required for their production.

Approved For Release 2003/02/27 : CIA-RDP86B00269R000600030001-1

Approved For Release 2003/02/27 : CIA-RDP86B00269R000600030001-1

Supplementary Remarks by Hon. Nelson A. Rockefeller, Vice President of the United States

In July 1972 when the Commission on Organization of the Government for the Conduct of Foreign Policy was established, the situation, both at home and abroad, was quite different from the situation in the world today.

—American forces were deeply involved in helping South Vietnam meet an all-out invasion from North Vietnam.

—The President had made historic first trips to the Peoples Republic of China, where the important Shanghai Communique was issued, and the Soviet Union, where the first Strategic Arms Limitations Agreement was signed.

—An uneasy tension loomed over the Middle East.

—News of a break-in at the Watergate had just come to the public's attention.

—There were important elements of strained relations between the Administration and the Congress.

Much has happened in the intervening three-year period, during which the Commission's report has been developed. Dramatic events have tested the vitality and resilience of our great nation:

—The President and the Vice President resigned from office and were replaced under the provisions of the 25th Amendment of the Constitution.

—A dangerous war in the Middle East has been followed by negotiations which may lead toward a lasting peace.

—An oil embargo has demonstrated our growing lack of energy independence, and a quadrupling of oil prices has affected the economies of industrial nations around the world.

The resulting inflation and subsequent recession have caused high unemployment and a great challenge to the free nations of the world.

—Our sacrifices to support the independence and freedom of Indochina came to a traumatic and tragic end.

—The Cyprus dispute between Greece and Turkey and Communist gains in Portugal and elsewhere have threatened the solidarity of NATO's western and southern Mediterranean flanks.

—A younger, more restive Congress has been elected.

The United States has rebounded from this difficult period under the leadership of a strong new President. In President Ford we have gained a great leader with the courage and vision to deal with the difficult challenges we face in the international area. He is especially dedicated to working constructively and openly with the Congress.

The President is backed by an extraordinarily skillful Secretary of State to whom America owes a great debt for steady and imaginative initiatives in U.S. foreign policy during a tumultuous and complex period. His brilliant contributions are in many ways unprecedented in our history. In his joint capacities as Assistant to the President and Secretary of State, he has been able to be most effective in assisting the President in building a safer and better world.

In trying to develop a report which both reflects the lessons of history and anticipates the organizational problems we will face in the future, the Commission has had to cope with this difficult period of transition. Although I was only privileged to participate in Commission deliberations during the final five months of its existence, I have been impressed with the ambitious range of issues it undertook to study and with its dedicated efforts to grapple with extremely complex problems.

Creative organizational recommendations can help us better meet economic, military and ideological challenges.

One of the limiting aspects of this Commission's interpretation of its charter has been the decision not to attempt to project American purposes and objectives for the future as a framework for evaluating various organizational mechanisms.

If we do not act on the basis of a clear conception of our national interests—our human goals, economic and financial needs, and political purposes—the assessment of organizational structures must necessarily be narrow.

We must be organized in the years ahead to ensure that democracy will continue to be a dynamic force in the world, dedicated to the best interests and well being of peoples everywhere and to respect for human dignity, justice and freedom. We must enhance our economic strength and national vitality. We must recognize that threats to our national security while far more complex are as real today as in the past and far more serious for the future.

But while the third century of our national existence presents complex dangers, at this same time it offers increased and exciting new opportunities for building a better world.

Approved For Release 2003/02/27 : CIA-RDP86B00269R000600030001-1

Approved For Release 2003/02/27 : CIA-RDP86B00269R000600030001-1

A question we must face is how an open society, dedicated to the ideals of freedom, democracy and human rights, can protect itself and work in partnership to strengthen those who share the same ideals, in a world of ideological, military, political, and economic competition with closed societies. For this reason we must have a strong sense of national purpose and dedication to our basic beliefs in human justice and freedom with a powerful military, a skillful intelligence service, and a vigorous and healthy economy, which is essential for the protection and expansion of equal opportunity and respect for human dignity.

In competing with authoritarian governmental structures, a democracy has inherent organizational disadvantages. Our system depends on effective Executive leadership together with effective and constructive cooperation between the Congressional and Executive branches.

The Commission has made a number of excellent suggestions for future organization. I believe, however, that more creative proposals might have been developed in some areas for strengthening our democracy to meet the challenges we face. This is particularly true in the area of Congressional-Executive relations.

Congressional-Executive Relations. The Congress shares the responsibility with the Executive in regard to foreign policy, but the relationship can be destructive if it paralyzes the President in meeting his broad responsibilities for national security and world peace.

The process of conducting and implementing our foreign policy is complex. The Congress has injected itself more assertively into that process. There has been a return swing of the power pendulum—which has tended to shift over the years between the President and the Congress.

Although tension between branches is inherent in our system, we need a renewed unity of purpose and a spirit of confidence, both at home and abroad, especially at this moment in history.

This thought was cogently expressed by the Prime Minister of Singapore in a May 8, 1975 toast to the President when he called for the

> * * * restoration of confidence in the capacity of the United States to act in unison in a crisis. No better service can be done to non-Communist governments the world over than to restore confidence that the American government can and will act swiftly and in tandem between the Administration and Congress in any case of open aggression, and where you have a treaty obligation to do so.

Disunity within Congress itself, like organizational problems within the Executive, can also complicate the process of cooperation. Today, some of the challenges to past practices within the Congress make it more difficult for the President and the Congress to find a concerted position.

These developments have contributed to [illegible] difficulties, and to the appearance in recent times of a disorganized, fragmented, and often immobilized American foreign policy. The following are just a few examples:

—The exclusion of four important friendly oil producing nations from many benefits of the 1974 Trade Act, even though they did not participate in the oil embargo of 1973.

—The exclusion of the Soviet Union from Most Favored Nation trading status, with a markedly negative impact on Jewish emigration.

—The cutoff of military assistance and sales to Turkey, a key member of NATO with borders on both the Soviet Union and the volatile Middle East.

Broad goals have usually not been at issue. Rather, it has more often been a question of different views on tactics to achieve objectives. The situation is complicated by the fact that lobbies, both domestic and foreign, are increasingly influential in Congress on foreign policy issues. Failure to develop a concerted position has resulted in legislation and policies which are counter-productive, in most cases, to the aims of the sponsors of these restrictive resolutions.

The dangerous result has been an international perception by some that the U.S. does not always act responsibly—even in accordance with its own interests. The image of 536 individuals' hands on the tiller of the Ship of State does not inspire confidence that we will hold a steady course.

Surely, the Founding Fathers did not intend the Congress to have a veto on the day-to-day conduct of foreign affairs. The President must have the flexibility to manage our foreign relations, to negotiate with foreign governments, and to take those measures necessary to safeguard our national interests, always with appropriate participation by the Congress.

We need the proper measure of Congressional involvement and the processes which best serve our national interests. We need to build mutual confidence and genuine communication. Greater understanding and cooperation from the Executive must be matched by a sense of responsibility and trust on the part of the Congress.

Our co-equal branches of government need to build together a new spirit of cooperation. A dynamic Executive-Congressional partnership can usher in a new period of achievement in foreign relations.

The Commission's report could have made more creative suggestions for bolstering this essential cooperation.

> In the chapters on the Executive branch there is not enough emphasis on the shared responsibilities of the two branches and the important Executive responsibility of liaison with Congress. In recognition of this, the new President, his staff, and Cabinet officers have been [illegible] about to strengthen contact and communication with the Congress.

Approved For Release 2003/02/27 : CIA-RDP86B00269R000600030001-1

Approved For Release 2003/02/27 : CIA-RDP86B00269R000600030001-1

—In Chapter 13, which deals directly with Executive-Congressional relations, the collective impact of the recommendations seems to amount to a further curtailment of Executive flexibility.

The Commission has also attempted in the chapter on Executive-Congressional relations to cover in a short space questions which raise deep and difficult Constitutional issues that do not lend themselves to brief treatment. The questions of war powers, executive privilege and executive agreements are three of these complex issues which have a long history of Judicial, Congressional and Executive argument.

Although I have some reservations about the formulations on these subjects, I am gratified by modifications during Commission deliberations. I commend to the attention of those interested in the complicated questions of executive privilege and executive agreements the attached letter from Attorney General Levi, which he thoughtfully prepared on behalf of the Commission during the course of earlier discussions.

The net impact of the formulations in these areas and in other areas addressed in the chapter, such as time limiting provisions in legislation and a system for statutory classification, may restrict the needed flexibility of the Executive in day-to-day operations.

While I question the practicality of defining by statute, rules for the entire classification system of the government, I wholeheartedly endorse the Commission's call for legislation to provide criminal sanctions for persons who endanger the national interest by releasing classified information. I endorse, as well, the Commission's call for more responsible handling of classified materials on Capitol Hill, believing this will facilitate a fuller exchange of information without jeopardizing security interests.

Executive. In the Executive area, there is a commendable tendency in the report to encourage greater participation by the various departments involved with foreign policy. However, some de-emphasis on the role of the President's staff is also implied. It would be a mistake to take any step that would diminish the President's ability to receive a full presentation of conflicting views on broad questions of national interest and to make decisions.

The President must have a competent staff to be well informed, to ensure that the views of the many departments and agencies concerned with foreign policy are fairly represented, and to convey his policies to the departments which must implement them. The President must take the lead in providing policy guidance and ensuring that the activities of our government are consistent with that policy.

Pitting one department against another without systematic resolution of controversial issues at the Presidential level would lead to uncoordinated policies by competing agencies. The President would have less understanding of the implications of conflicting views. He might well be deprived of well-thought-out options for the many significant policy decisions which only he can make.

Intelligence. Because of the growing complexities of the challenges to free societies, no national requirement is more important today than an effective intelligence service.

With regard to the question of direction of the intelligence community, the Commission was divided on the issue of whether the National Security Council Intelligence Committee should be chaired by the Assistant to the President for National Security Affairs or the Director of Central (Foreign) Intelligence. The Committee is designed to provide policy guidance on intelligence from the perspective of the intelligence user. I believe it would be a mistake to give leadership of this Committee to anyone other than a policymaker. That guidance is best provided, under the current system, by the Assistant to the President for National Security Affairs, who is in a position to understand the concerns of the President, the principal intelligence consumer.

Another committee associated with Intelligence is the Forty Committee which considers proposals for actions that lie in that grey area between diplomatic action and declared war. The report may be overly critical of a supervisory system which has functioned well. The primary reason the Committee has met less frequently over the last year has been a cutback of activity resulting from concern about the large number of persons who must be informed about such operations. The proposals in Chapters 7 and 14 of the report for establishing a small committee on intelligence or one on national security could well provide the solution to this problem.

With regard to oversight of intelligence, the Commission has noted the recommendations of the Commission on CIA Activities Within the United States concerning the President's Foreign Intelligence Advisory Board. These recommendations have important implications for improved Executive oversight, including the assessment of the quality of foreign intelligence collection, estimates, organization, and management; and assessment of compliance by CIA with its statutory authority.

Other Areas. Although I have minor reservations about other aspects of the lengthy report, I mention here only five areas:

United States Information Agency. The Stanton recommendations concerning USIA deserve most careful consideration and appear to have merit. However, there should be further evaluation of them, and an especially careful study of the pros and cons associated with creating an independent Voice of America (VOA). In contemplating any change it would be necessary to [illegible] guidance from the Department of State.

Approved For Release 2003/02/27 : CIA-RDP86B00269R000600030001-1

Approved For Release 2003/02/27 : CIA-RDP86B00269R000600030001-1

—*Defense Budget.* Although I strongly favor taking those measures necessary to guarantee continued American military security, I do not believe that the Commission's suggestions will overcome existing organizational problems associated with Defense budgeting. The President needs to be presented with genuine alternatives for structuring our forces in order to make those decisions which will safeguard our security and most effectively utilize our national resources. Military security has first priority, but it must be harmonized with domestic concerns and economic constraints.

—*Embassy Communications.* In endorsing a strong role for the Ambassador in managing the country team overseas, the formulations in Chapter 9 of the report concerning his right to access to all communications, rather than just official communications, goes beyond his actual requirements.

—*Energy.* The Commission was not able to deliberate sufficiently to develop proposals for solving the immense organizational problems associated with obtaining energy independence. These need urgent examination.

—*General Research.* The studies commissioned by the Staff are of uneven quality and, as indicated in the preface, have not been reviewed or approved by the Commission as a whole.

Overall, the report contains a number of imaginative and valuable contributions. A thorough consideration by the Executive and the Congress of the findings of the Commission will undoubtedly lead to constructive improvements in organization.

I have thoroughly enjoyed working with the distinguished members of the Commission and have great respect for the diverse views of the individual members. We are all indebted to the skillful leadership of our Chairman, Ambassador Robert M. Murphy, and to the dedicated efforts of Director Francis O. Wilcox, Counsel William B. Spong, Jr., and the other devoted members of the Staff. I am especially grateful to General Andrew J. Goodpaster, USA (Ret), and Captain Jonathan T. Howe, USN, who have so ably assisted me in meeting my own responsibilities to the Commission.

Enclosures:

(1) Letter of June 13, 1975 from Attorney General Edward H. Levi to the Vice President.

(2) Statement of Assistant Attorney General Antonin Scalia before the Subcommittee on Separation of Powers, Committee on the Judiciary, United States Senate, May 15, 1975.

Enclosure (1)

OFFICE OF THE ATTORNEY GENERAL,
Washington, D.C., June 13, 1975.

HON. NELSON A. ROCKEFELLER,
Vice President, Executive Office Building, Washington, D.C.

DEAR MR. VICE PRESIDENT: You have asked for [illegible] in the practical necessities of draft report which deal with executive privilege and executive agreements. The draft is now being considered by the Commission on the Organization of the Government for the Conduct of Foreign Policy, of which you are a member.

The areas of executive privilege (or confidentiality) and executive agreements do not lend themselves to easy description or analysis. The draft proposals present legal and practical problems of considerable difficulty.

I. EXECUTIVE PRIVILEGE

The proposal before the Commission with respect to executive privilege recognizes there are circumstances in which the confidentiality of the Executive must be preserved. But in proposing to legislate the bounds of that confidentiality, the proposal, it seems to me, overleaps the initial question of whether such legislation would have any utility.

I think it must be emphasized at the outset that this supposed utility should not be taken for granted. If confidentiality is a constitutionally-based doctrine, its limits may not be determined by statute. Although the statute may have some persuasive force, the scope of the doctrine must necessarily be defined in a common-law manner by a series of specific congressional demands and executive acquiescences or refusals, followed, perhaps, by litigation over the latter. If executive privilege is not rooted in the Constitution, the question remains whether it might not be preferable for Congress to determine the question of the reasonableness of refusal of access on a case-by-case basis, rather than in advance when the variety of circumstances surrounding each demand cannot be foreseen.

I believe the broadest recorded use of executive privilege occurred in the 1950s when President Eisenhower forebade any employee of the Department of Defense from testifying, with respect to internal advice, in what was then known as the "Army-McCarthy hearings." The President felt that the hearings were harassing employees of the Department down to the lowest levels and that his order was necessary to preserve morale and insure forthright advice-giving within the Department. The Committee and the Congress declined to challenge that Presidential assertion of confidentiality—and I think rightly so in the particular context. I would not, however, contend that such a broad assertion of confidentiality against the Congress would always be reasonable and should always go unchallenged. This is precisely the result, however, that the present proposal (assuming its constitutionality) would produce. I would no more like the opposite prescription, rendering such an assertion of confidentiality always unlawful.

The lesson of history is that the reasonableness of an assertion of confidentiality simply cannot be determined in advance on the basis of neat categories. It depends upon an incalculable number of factors. I think it would be unfortunate for Congress to commit itself to a position—either accepting or rejecting the assertion—in advance, on the basis of abstract criteria and in ignorance of the factual context in which the issue is posed. Though some confidentiality should be permitted, even if there were no constitutional right, it would seem preferable for Congress to determine that question on a case-by-case basis. These considerations lead me to suggest that legislation in this area will not only be extremely difficult to draft, but may not be in the best interests of either the Congress or the Executive.

Executive confidentiality is a constitutional doctrine

The doctrine of executive privilege, like the companion doctrines of legislative and judicial privilege, arises from the necessity to protect the decisional processes and communications essential to the effective functioning of one of the great branches of government.

The constitutional doctrine of executive confidentiality draws support from [illegible]

Approved For Release 2003/02/27 : CIA-RDP86B00269R000600030001-1

Approved For Release 2003/02/27 : CIA-RDP86B00269R000600030001-1

government. Practical necessity is the basis for much constitutional doctrine. Examples are numerous. In *McCulloch v. Maryland*, 4 Wheaton 316 (1819), Mr. Chief Justice Marshall upheld the power of Congress to create the Bank of the United States and the immunity of the Bank from state taxation, basing his decision on the federal government's need for such an instrumentality to operate effectively and the concomitant impropriety of state interference with essential federal functions. In *In re Neagle*, 135 U.S. 1 (1890), the Supreme Court upheld the inherent executive power to protect a Justice of that Court by assigning a federal marshal to travel with him to California and the consequent immunity of the marshal from state prosecution for a killing necessarily performed by him in carrying out his duties.

Some confidentiality is inherent in the existence, purpose, and structure of the government created by the Constitution. As I have stated elsewhere,* protections against unwarranted intrustions, whether by the governor or the public, have become an essential feature of our legal system. The recognition of the need for confidentiality reflects a basic truth about human beings, whether in the conduct of their private lives or in their service with the government. Confidentiality is a prerequisite to the enjoyment of many freedoms we value most. This need applies not only to individuals but also to groups, professions, and other social organizations. The effective pursuit of social, economic, and political goals often demands privacy of thought, expression, and action. The claim of the news media for a privilege to protect the confidentiality of their sources of information is based on a belief that public disclosure of news sources, coupled with the embarrassment and reprisals that might ensure, could well deter informers from confiding in reporters. It would diminish the free flow of information. Another manifestation of the need for confidentiality of groups may be found in the law's protection of trade secrets. The exercise of First Amendment rights also includes the right of the people to make their wishes known to their representatives. *Eastern Railroad Presidents Conference v. Noerr Motor Freight, Inc.*, 365 U.S. 127 (1961). Communications protected by the First Amendment may require confidentiality so that they will not be chilled. Many will not speak candidly to their government about the problems of politics and economic interest if they know their remarks may be made public in some future law suit. The Supreme Court applied the right of confidentiality to membership lists in *NAACP v. Alabama*, 357 U.S. 449 (1958). Although the state had a legitimate interest in seeking the NAACP's membership lists, the interest was not sufficiently strong to overcome the First Amendment value in preserving the organization's advancement of its beliefs and ideas from the chilling effect that disclosure of the identity of its members would probably have.

Last term in *United States v. Nixon*, 418 U.S. 683, 705 (1974), the Supreme Court noted that confidentiality at the highest levels of government involves all the values normally deferred to in protecting the privacy of individuals, and in addition, "the necessity for protection of the public interest in candid, objective, and even blunt or harsh opinions in presidential decision-making." The Court observed that "human experience teaches that those who expect public dissemination of their remarks may well temper candor with a concern for appearances and for their own interests to the detriment of the decision-making processes." *Id.*, at 708. For these reasons, the Court held that the Executive's right of confidentiality is based in the Constitution. The Court stated:

> "The privilege is fundamental to the operation of government and inextricably rooted in the separation of powers under the Constitution." *Id.*, at 708.

* See Address by Attorney General Edward H. Levi, Association of the Bar of the City of New York, April 28, 1975.

* * * * * * *

> "Nowhere in the Constitution, * * * is there any explicit reference to a privilege of confidentiality, yet to the extent this interest relates to the effective discharge of a President's powers, it is constitutionally based." *Id.*, at 711.

These considerations lead me to conclude that executive confidentiality is a constitutional doctrine and that "to the extent this interest relates to the effective discharge of a President's powers," it cannot be diminished by legislation. This indicates, as I have noted above, that the proposal for legislation now before the Commission could not narrow the scope of the privilege but might conceivably broaden it.

There is, of course, no reason why Congress might not allow greater confidentiality than the Constitution requires, but the instances in which that would be prudent are better determined individually than by broad and rigid rules made in advance. There are simply too many variables involved in each case to enable any abstract general scheme to be satisfactory. Since, by definition, the entire matter is always within the initiative of Congress anyway (it is congressional requests that we are considering), it makes more sense to handle the problems as they arise on a case-by-case basis.

The considerations discussed so far relate to the inadvisability of any legislation in these complex fields where every case will involve a blend of constitutional law and prudential choice. There are also, however, particular aspects of the proposal now before the Commission that pose serious problems. I turn next to these.

The criteria for disclosure

The outline of the recommendation is that executive privilege may be claimed only by the President in person and only with respect to three types of information:

> (1) Confidential advice concerning policy choices, excluding, however, factual information underlying or included in such advice;
> (2) Information the disclosure of which would violate established rights of individual privacy, or breach of understandings with foreign governments concerning information supplied by them;
> (3) Information as to which it can be shown that the harm to the national interest flowing from disclosure outweighs any congressional needs.

It should first be noted that there appears to be no warrant in the case law for a requirement that the President claim the privilege in person. There is no constitutional reason, for example, why he cannot delegate his privilege to the Secretary of State where matters of foreign relations are concerned. Indeed, in *United States v. Reynolds*, 345 U.S. 1, 8 (1952), dealing with the government's evidentiary but related privilege against disclosure, the Court expressly stated that the privilege could be invoked by a department head. No reason has been offered as to why a different rule should obtain when the privilege invoked is of a constitutional order, especially since the result in either case is the same—the information is denied. As you are no doubt aware, current Presidential directives reserve the assertion of executive privilege against the Congress to the President alone. I believe this is a sound policy expressive of the mutual respect which should exist between the branches. But it is not in my view constitutionally required, nor can it be legislatively imposed.

Each of the three criteria for the application of the privilege poses serious problems. It is doubtful, for instance, that a realistic distinction can always be drawn, as the first rule requires, between confidential advice concerning policy choices and the factual information underlying or included in such advice. [illegible] constitutes "established rights of individual privacy." There are many legitimate expectations of privacy that

Approved For Release 2003/02/27 : CIA-RDP86B00269R000600030001-1

Approved For Release 2003/02/27 : CIA-RDP86B00269R000600030001-1

decent government ought to humor that are not "established" by the Constitution or any statute or regulation.

But it is the third criterion that may be the most objectionable aspect of the proposal, and it is objectionable both from a practical and legal standpoint.

As applied specifically to the field of foreign affairs, it may be useful to recall briefly the long constitutional tradition which the proposal on executive privilege would affect. On January 24, 1794, the Senate requested the President to lay before the Senate the correspondence between the Minister to France and the Department of State. 1 Senate Executive Journal 147. President Washington complied with that request "except in those particulars, which, in my judgment, for public consideration, ought not to be communicated." 1 Richardson, Messages and Papers of the Presidents 152. Secretary of State Randolph advised President Washington that the message "appears to have given general satisfaction" and that "Mr. M-d-n" (presumably James Madison) recognized "that the discretion of the President was always to be the guide." *The Writings of George Washington* (Bicentennial Edition) Vol. 33, p. 282 fn. 8.

It is, of course, well known that resolutions of inquiry seeking information in the field of foreign relations traditionally contained the clause "if not incompatible with the public interest." See *United States* v. *Curtiss-Wright Export Corps.*, 299 U.S. 304, 321 (1936). And there have been many instances in which members of the legislative branch recognized that even in the absence of such clause the Executive had the right and indeed the duty to withhold information the disclosure of which in his opinion would be injurious to the public interest. See, e.g., Congressman Sprague, Register of the Debates in Congress, 19th Con., 1st Sess., col. 1274 (1826) Congressman Mitchell, ibid; Senators Teller, Allison, and Lodge, 40 Con. Rec. 24–25 (1905).

I do not really believe that the standard for the assertion of executive privilege in the foreign affairs field which the present proposal would establish is any different from that which Presidents have heretofore used. To be sure, refusals to disclose have generally been based simply upon the "public interest"—but I do not believe that was meant to assign some absolute value to the secrecy of certain information, without regard to the purpose for which it was sought by the Congress. I think, in short, that the proposal's formulation—that the harm of disclosure must outweigh any congressional need—is as apt an expression of the proper test as can be devised. The issue, however, is who will be the judge of the proper application of the test. Historically, it has been the President. Under the present proposal, it will be the courts. A volume could be written about the problems which this disposition raises. I shall limit myself to one particular point—namely, that the Supreme Court has clearly indicated its unwillingness and, indeed, its inability to assess military and foreign policy considerations, much less balance them against congressional needs.

In *C. & S. Airlines* v. *Waterman Corp.*, 333 U.S. 103, 111 (1948), the Supreme Court said the following:

> "The President, both as Commander-in-Chief and as the Nation's organ for foreign affairs, has available intelligence services whose reports are not and ought not to be published to the world. It would be intolerable that courts, without the relevant information, should review and perhaps nullify actions of the Executive taken on information properly held secret. *Nor can courts sit in camera in order to be taken into executive confidences.* But even if courts could require full disclosure, the very nature of executive decisions as to foreign policy is political, not judicial. Such decisions are wholly confided by our Constitution to the political departments of the government, Executive and Legislative. They are delicate, complex, and involve large elements of prophecy. They are and should be undertaken only by those directly responsible to the people whose welfare they advance or imperil. They are *of a kind for which the Judiciary has neither aptitude, facilities nor responsibility* and which has long been held to belong in the domain of political power not subject to judicial intrusion or inquiry." (Emphasis supplied).

Again, in *United States* v. *Reynolds*, 345 U.S. 1, 10 (1953), the Court held with respect to military and state secrets.

> "It may be possible to satisfy the court, from all the circumstances of the case, that there is a reasonable danger that compulsion of the evidence will expose military matters which, in the interest of national security, should not be divulged. When this is the case, the occasion for the privilege is appropriate, and the court should not jeopardize the security which the privilege is meant to protect by insisting upon an examination of the evidence, even by the judge alone, in chambers."

It is true that these cases, especially *Waterman*, rest to some extent on the political question doctrine which was narrowed by *Baker* v. *Carr*, 369 U.S. 186 (1962). Nevertheless, even in that case the Court acknowledged and defined political questions from the decision of which the courts will abstain:

> "* * * A texturally demonstratable constitutional commitment of the issue to a coordinate political department, or *a lack of judicially discoverable and manageable standards for resolving it;* or the impossibility of deciding without an initial policy determination of a kind clearly for nonjudicial discretion; or the impossibility of a court's undertaking independent resolution without expressing lack of the respect due coordinate branches of government; or an unusual need for unquestioning adherence to a political decision already made; or the potentiality of embarrassment from multifarious pronouncements by various departments on one question." At p. 217. (Emphasis added).

I conclude from this statement that the degree of necessary protection for military and state secrets—at least when the issue arises in the context of a disagreement between the legislative and executive branches—is a political question into which the courts will not intrude. The case law following *Baker* v. *Carr* supports this analysis.

With respect to the confidentiality of intra-governmental communications, the Supreme Court has taken the position that courts may determine whether, in the context of a criminal trial, the need for disclosure outweighs the need for keeping the infomation confidential. See *United States* v. *Nixon*, 418 U.S. 683, 705–713 (1974). In that case, however, the Court expressly pretermitted the question whether courts may similarly determine, in the context of the legislative process, whether the need for disclosure to Congress outweights the Executive's need for keeping the information confidential. It should be evident that this latter task would often require courts to make judgments of a distinctly political nature, including predictions on the scope and consequences of proposed legislative actions, and would be alien to the traditional role and expertise of the judiciary. The wisdom of assigning that responsibility to courts is open to serious doubt, as well as is the very justiciability of the issues which the Commission's scheme seeks to have resolved. Plainly enough, the precedent established by the *Nixon* case cannot easily be extended to encompass Congressional demands for information, even where the basis for withholding the information rests solely on the general need of government for confidentiality in its decision making processes.

In addition, the Court in the *Nixon* case emphasized that a more difficult question would be presented if "diplomatic or sensitive national security secrets were involved," and noted that "[a]s to these areas of Art. II duties of the courts have traditionally shown the utmost deference to presidential responsibilities." 418 U.S. at 706, 710. The Court then specifically reaffirmed the holdings in *Waterman* and *Reynolds* that the courts will not reexamine the President's determinations in the field of state secrets, for the reason (as) that the judiciary must defer

Approved For Release 2003/02/27 : CIA-RDP86B00269R000600030001-1

Approved For Release 2003/02/27 : CIA-RDP86B00269R000600030001-1

to the President's superior expertise in that field, and (b) that such examination—even *in camera*—might compromise the information.

The balancing of incommensurable interests contemplated by the third rule, then, presents a non-justiciable question.

The provision for in camera inspection

The proposal contemplates that disagreements over confidentiality between the Executive and the Congress shall be resolved by the Judiciary and that the latter should proceed upon *in camera* inspection of the disputed materials. This procedure would prove unsatisfactory for all parties concerned. Obviously, even *in camera* inspection has some undesirable chilling effect upon the candor of the decision-making processes within the Executive branch. But that is not the only point.

The first problem is that of security, especially where the documents involved reveal national security or foreign policy information. The very process of *in camera* inspection increases the possibility that the confidentiality of documents will be violated. The documents must be removed from their usual custodians, assembled, and then analyzed by new personnel, themselves unfamiliar with the problems to which they relate. When they reach the court, the documents are accessible to the judge and any other personnel whose assistance he requires. If an appeal follows, the documents must pass through the hands of the district judge, the judges of the Court of Appeals, and the Justices of the Supreme Court, including any number of clerks whose assistance the various judges think necessary. In these circumstances, it is simply impossible that confidentiality could consistently be maintained. This conclusion implies no disrespect for the federal judiciary. It is a simple fact of life that as the circle of persons who know a secret widens, the likelihood of a leak increases until it becomes a virtual certainty.

If *in camera* inspection is unsuited to the needs of the Executive, it is equally unsuited to the processes and needs of the Judiciary. *In camera* procedures make it impossible for the courts to develop an intelligible law of privilege. Each judge will make his determination to maintain the confidentiality of documents in secrecy. Since the document is confidential, he will be unable to explain his decision. A district judge faced with an *in camera* decision will not have the benefit of guidance from candid and extensive opinions either by other district judges or by appellate judges. This will serve to make the outcome of the process unpredictable and thus create an uncertainty that will itself threaten the expectation of confidentiality.

For good and sufficient reasons, the courts have not made use of *in camera* procedures in their consideration of other privileges. Privileges comparable to executive privilege (lawyer-client, priest-penitent, husband-wife) come into being upon a showing that the relationship required by the law exists. In no privilege of this sort does the court examine documents or testimony. Rather, when the relationship is shown, the privilege comes into operation and the matter is at an end. The traditional practice with respect to other privileges should give pause to those who would impose a wholly different procedure for executive privilege in the present context.

Those same considerations led the Supreme Court in *Alderman* v. *United States*, 394 U.S. 165 (1967), to reject the government's suggestion that the district judge should examine the fruits of an illegal wiretap in camera to determine if they were relevant to the case before turning them over to the defendant. "Although this may appear a modest proposal," the Court stated, "* * * winnowing this (irrelevant) material from those items which might have made a substantial contribution to the case against a petitioner is a task which should not be entrusted wholly to the court in the first instance." The Court then went on to point out the difficulties of the task in an *in camera* proceeding. "An apparently innocent phrase, a chance remark, a reference to what appears to be a neutral person or event, the identity of a caller or the individual on the other end of the telephone, or even the manner of speaking or using words may have special significance to one who knows the more intimate facts of an accused's life * * *. In our view the task is too complex, and the margin for error too great, to rely wholly on the in camera judgment of the trial court." 394 U.S. at 182.

The Court of Appeals for the District of Columbia Circuit—perhaps the most experienced appellate court in the country with procedures of this type, and certainly in times past an exponent of *in camera* procedures (see *Committee for Nuclear Responsibility, Inc.* v. *Seaborg*, 463 F.2d 788 (D.C. Cir. 1971)—has commented on the difficulties of in camera inspection in Freedom of Information Act cases. In *Vaughn* v. *Rosen*, 484 F.2d 820 (D.C. Cir. 1972), *cert. denied*, 415 U.S. 977, the Court stated: "Such an examination may be very burdensome, and is necessarily conducted without benefit of criticism and illumination by a party with the actual interest in forcing disclosure." *Id.* at 825. "The problem is compounded at the appellate level. * * * Frequently trial courts' holding * * * are stated in very conclusory terms." *Ibid.* The Court concluded: "Such an investment of judicial energy might be justified to determine some issues. In this area of the law, however, we do not believe it is justified or even permissible." *Ibid.*,

* * * * * * *

The fundamental difficulty with the present proposal, in my opinion, is that it seeks to achieve certainty, and to provide for easy resolution of disagreements between the two elected branches, where, in the nature of things, those goals are simply not achievable. The degree of confidentiality which should be accorded the Executive in various fields, and the degree of access to the innermost workings of the Executive which should be accorded to the Congress, will (and in my view must) vary from era to era, depending upon many factors which are inherently not within the competence of courts to assess—factors as fundamentally political as the degree of confidence which the Nation has in its Chief Executive, and the degree of support which it gives to the particular congressional inquiry at hand. To be sure, the Commission's proposal may initially appear to have the virtue of definition. But it is the very uncertainty and tension inherent in the separation of powers doctrine that has long been thought to be the source of the genius for government that is manifest in our Constitution.

II. EXECUTIVE AGREEMENTS

The draft report on Executive agreements proposes that Congress pass legislation requiring, among other things, that all international agreements be sent to Congress within 30 days of signing and come into effect 60 days following transmittal unless either House passes a resolution of disapproval. International agreements subjected to this process would include bilateral or multilateral Executive agreements; diplomatic notes embodying agreements; significant agency-to-agency agreements, or any other administrative arrangements which purport to bind the United States. According to the draft, agreements would be reviewed in this manner even when already authorized by existing legislation, treaty, or the constitutional authority of the President.

Since 1972, the Secretary of State has been required to transmit to Congress "the text of any international agreement, other than a treaty" under the Case Act, Public Law 92-403, 1 U.S.C. 112b (Supp. III, 1973).* The legislative history

* The Act does not interfere, however, with the existing powers of the President to conclude agreements pursuant to statutes, treaties, and the Constitution.

Approved For Release 2003/02/27 : CIA-RDP86B00269R000600030001-1

Approved For Release 2003/02/27 : CIA-RDP86B00269R000600030001-1

of that Act, and the administrative practice under it have given the words "international agreement" a meaning in keeping with the purpose of the statute—to keep Congress informed of significant agreements. Thus the House Report on the Case Act states:

> "*What constitutes an international agreement.*—During committee hearings a State Department spokesman raised the question of what kind of arrangements constitute international executive agreements within the meaning of the legislation. He pointed out that many exchanges involve administrative working details for carrying out a treaty or agreement or are in the nature of commercial contracts relating to sales of equipment and commodities.
>
> "Clearly the Congress does not want to be inundated with trivia. At the same time, it would wish to have transmitted all agreements of any significance." H. Rept. 92-1301."

The draft goes far beyond the understanding reflected in the House Report and would include not only agreements of significance but "any other administrative arrangements which purport to bind the U.S." Such administrative arrangements and agreements are "as broad as the scope of our foreign relations." See *Digest of United States Practice in International Law* (Rovine ed., 1973), p. 187. Although the numbers may have increased in recent years, there is nothing new about this practice. A classic exposition was furnished in 1905 by the famous American scholar on international law, John Bassett Moore:

> "The conclusion of agreements between governments, with more or less formality, is in reality a matter of constant practice, without which current diplomatic business could not be carried on. A question arises as to the rights of an individual, the treatment of a vessel, a matter of ceremonial, or any of the thousand and one things that daily occupy the attention of foreign offices without attracting public notice; the governments directly concerned exchange views and reach a conclusion by which the difference is disposed of. They have entered into an international 'agreement'; * * * the secretary of state of the United States * * * has engaged in routine transactions of this kind. * * * since the foundation of the government. * * * Without the exercise of such power it would be impossible to conduct the business of his office." *Treaties and Executive Agreements*, 20 Pol. Sci. Quarterly 385, 389-90 (1905).

Under the draft proposal no agreement or arrangement could take effect for at least 60 days from the time of transmittal. It should be obvious, however, that many types of agreements and arrangements, such as those for cease fire or disaster relief, must be put into force immediately if they are to have any effect. Moreover, anyone who has been involved in complex negotiations can appreciate the delicacy of compromise often involved and the danger that agreements once negotiated can "come unravelled" if not concluded immediately. See, *e.g.*, *Congressional Oversight of Executive Agreements, Hearing before the Subcommittee on Separation of Powers of the Senate Judiciary Committee*, 92d Cong., 2d Sess., p. 259 (1972). To take an example from recent events, suppose that the President had been able to negotiate an agreement for the release of the crew of the Mayaguez. Would it have made sense to postpone the implementation of such an agreement—and indeed even to withhold our acceptance of it—for a period of 60 days?

I have been speaking only of the impracticality of the restrictions which this proposal would place upon Presidential action. Ordinarily, such impracticality relates only to the desirability of suggested legislation. When, however, it reaches such a level that it seriously impairs the performance of constitutionally prescribed Presidential functions, it raises constitutional as well as pragmatic difficulties. I believe that to be the [illegible]

The effect of an across-the-board transmittal and 60-day delay requirement might be so severe that "current diplomatic business could not be carried on." See J. B. Moore, *supra*. As a result, the power of the President as "sole organ of the federal government in the field of international relations" would be impaired. *United States* v. *Curtiss-Wright Export Corp.*, 299 U.S. 304, 318, 320 (1936); *United States* v. *Pink*, 315 U.S. 203, 229 (1942); *United States* v. *Belmont*, 301 U.S. 324, 330 (1937). In *Pink*, the Supreme Court noted the importance of the power of the President to enter an Executive agreement which removed obstacles to United States recognition of the Soviet government. As to that power, the Court said:

> "Effectiveness in handling the delicate problems of foreign relations requires no less. Unless such a power exists, the power of recognition might be thwarted or seriously diluted. No such obstacle can be placed in the way of rehabilitation of relations between this country and another nation, unless the historic conception of the powers and responsibilities of the President in the conduct of foreign affairs (see Moore, Treaties and Executive Agreements, 20 Pol. Sc. Q. 385, 403-417) is to be drastically revised." 315 U.S. at 229-30.

The obstacles to foreign relations in all spheres presented by the proposed bill might be such that it would reach to the very ability of the President to perform "that control of foreign relations which the Constitution vests in the President as part of the Executive function." 39 Op. A.G. 484, 486 (1940). Thus, as broadly applied the bill would be unconstitutional.

Even assuming, however, that the transmittal and 60-day suspension requirement would not, in its general application to all Executive agreements, violate the Constitution, there are at least some Executive agreements which Congressional restrictions, however reasonable, cannot reach. Some subjects, such as the recognition of foreign governments and the conclusion of operational arrangements on the battlefield, are confided exclusively to the President by the Constitution, and are not subject to limitation by Congress. See Art. II, sections 2 and 3; *United States* v. *Pink*, *supra*; *Ex parte Milligan*, 71 U.S. 2, 139 (1866).

The serious constitutional problems I have alluded to—arising from incapacitating overall impairment of Presidential foreign affairs powers, and, more narrowly, from any attempted restriction of the Presidential authority in those few areas where that authority is exclusive—pertain to the *effects* of the present proposal. An independent constitutional problem appears when one considers the *means* by which those effects are sought to be achieved. Even in those broad areas in which Presidential action is subject to congressional control, that control cannot be asserted through the device of one-House veto, which is not a constitutional permissible form of legislative action. This is so for two reasons: First, because it evades the clear constitutional provision for Presidential participation in the legislative process through the veto power. And second, because it represents an impermissible delegation of legislative authority, which the Constitution vests in both Houses, to only one of them.

The Department has discussed these points at length before the Subcommittee on Separation of Powers of the Senate Judiciary Committee, in connection with consideration of pending legislation which would treat Executive agreements in a manner somewhat similar to the present proposal. I attach a copy of the testimony presented by Assistant Attorney General Antonin Scalia, which, at pages 14-23, treats the points here at issue. In my opinion the provisions of the Constitution, their legislative history, and the historical practice demonstrated with unusual clarity that the one-House veto here proposed is invalid.

Approved For Release 2003/02/27 : CIA-RDP86B00269R000600030001-1

* * * * * * *

Approved For Release 2003/02/27 : CIA-RDP86B00269R000600030001-1

It should be clear that the issues raised by executive privilege and executive agreements are exceedingly complex. Both subjects touch close upon the center of our governmental process—and the former, of course, extends much beyond merely the field of foreign affairs. It would be unrealistically ambitious to seek to discuss even one of these subjects with any completeness in a letter of this sort. There is an enormous body of scholarship on both subjects which warrants consideration. There have also been extensive congressional hearings—which have not induced the Congress to take any generalized action in the area of executive privilege, and have caused it to exercise its supervision over executive agreements only through individual statutes limiting the nature of agreements which the President may make (*e.g.*, Public Law 480, relating to the sale of agricultural commodities, 7 U.S.C. 1701) and through the notice provisions of the Case Act. With respect to both executive privilege and executive agreements, there is ample reason for proceeding with such caution and deliberateness.

I will be pleased to provide whatever further assistance I can to facilitate your consideration of these issues.

Respectfully,

EDWARD H. LEVI, *Attorney General.*

Enclosure (2)

STATEMENT OF ANTONIN SCALIA, ASSISTANT ATTORNEY GENERAL, OFFICE OF LEGAL COUNSEL ON EXECUTIVE AGREEMENTS (S. 1251 AND S. 632); BEFORE THE SUBCOMMITTEE ON SEPARATION OF POWERS, COMMITTEE ON THE JUDICIARY, U.S. SENATE, MAY 15, 1975

Mr. Chairman and members of the subcommittee: The Office of Legal Counsel has often participated in hearings conducted by this Subcommittee concerning separation of powers problems. The records of those hearings remain as useful studies on issues that few had focused on previously. This is particularly so in the case of executive agreements. The hearings on that subject which you conducted in 1972 collected the views of scholars, both in and out of government, and brought together important source materials; the 668-page printed record is a basic reference tool for students of this area. *Congressional Oversight of Executive Agreements, Hearing before the Subcommittee on Separation of Powers of the Senate Judiciary Committee on S. 3475*, 92d Cong., 2d Sess. (1972).

As a result of that earlier work, your deliberations today have been greatly simplified. The 1972 hearings clearly established not only that the executive agreement was a useful tool for the conduct of this Nation's business, but also that its constitutional ligitimacy was solidly based. Our own 1972 statement described that basis in some detail. We noted that executive agreements had a history going back to the First Congress (1 Stat. 232, 239), and that they had been upheld in major opinions of the Supreme Court. *E.g., United States v. Belmont*, 301 U.S. 324 (1937). See Statement of Ralph E. Erickson, Assistant Attorney General, in *Hearing, supra* at 307–328.

By the time the hearings were completed, we believe a consensus was reached on legal fundamentals. Thus, when this Subcommittee issued its report on Congressional Oversight of Executive Agreements (Committee Print, 93d Cong., 1st Sess.), it recognized that other types of international agreements besides treaties exist and have been approved by the Supreme Court (p. 4). The Subcommittee report explains (p. 6):

> "American constitutional law recognizes, in the Constitution itself and in judicial opinion, three basic types of international agreement. First, in order of importance is the treaty, an int[illegible] compact that requires consent by a two-thirds vote of the Senate prior to ratification . . . Next is the congressional-executive agreement, entered into pursuant to statute or to a preexisting treaty. Finally, there is the 'pure' or 'true' executive agreement, negotiated by the Executive entirely on his authority as a constituent department of government.
>
> "It is the prerogative of the Executive to conduct international negotiations; within that power lies the lesser, albeit quite important, power to chose the instrument of international dialog."

Although the Subcommittee believed that Congress should have a greater role in the review of international agreements, it refrained at that time from recommending specific legislation. It did not endorse the Ervin bill (S. 3475, 93d Cong.) which made all executive agreements subject to veto by concurrent resolution of Congress. The Report recognized that the bill was not "a finished product of legislative drafting" but "a basis for beginning a study and dialog which may lead to more detailed and refined legislation" (p. 12).

The bills before us today, S. 632 introduced by Senator Beutsen and S. 1251 introduced by Senator Glenn, differ in significanct respects from the original Ervin bill. Both provide for review of executive agreements, the former by concurrent resolution of Congress and the latter by resolution of the Senate alone. We do not believe that either is an appropriate measure that we can support.

S. 632 more closely resembles the bill on which the 1972 hearings were held, but contains a major difference: The original bill purported to regulate all executive agreements and to make them subject to veto by concurrent resolution; section 5 of S. 632, however, excepts "any executive agreements entered into by the President pursuant to a provision of the Constitution or prior authority given the President by treaty or law." [1] Presumably, this change reflects the conclusion drawn by the Subcommittee from its earlier hearings—that there are legitimate, well accepted areas for the conclusion of executive agreements under existing law. The problem with S. 632 is that, by including all these areas within the exception, it leaves nothing upon which the bill would operate—nothing, that is, except unlawful executive agreements, which it is not the President's intent ever to conclude. In other words, in my view S. 632 has no effect, unless one adopts an interpretation which would cause it to expand rather than to constrict Presidential power.

Let me explain: All executive agreements rely for their authority upon the Constitution, which empowers the President, and the President alone, to make agreements with foreign nations. In addition to the agreement-making authority, however, the President also requires authority to deal with the particular substantive area which the agreement affects. In some cases this authority is likewise conferred by the Constitution—as is the case, for example, with an agreement to recognize a foreign nation or to coordinate military tactics in the event of an attack upon the United States. When, however, the substance of the agreement is a matter over which the Congress exercises control, then if the President is relying upon the Constitution alone he must expressly or impliedly either (a) condition the performance of the agreement upon the enactment of appropriate legislation or (b) condition the very effectiveness of the agreement upon the enactment of appropriate legislation. Thus, for example, the President could, under the Constitution alone, enter into a bilateral agreement for the reduction of tariffs which states that the reductions will only occur when the Congress passes implementing legislation—or which recites that the agreement itself will be effective only upon the passage of implementing legislation. (A prominent historical example of an agreement of the latter sort was the executive agreement providing for establishment of the United Nations Headquarters District in New York City, which was to be "brought into effect" only

[1] [illegible] S. 632 [illegible]

Approved For Release 2003/02/27 : CIA-RDP86B00269R000600030001-1

Approved For Release 2003/02/27 : CIA-RDP86B00269R000600030001-1

after appropriate action by the Congress 22 U.S.C. 287, note; see Op. A.G. 469 (1946).) If the President desires to do any more than this with respect to a substantive area that is within congressional control, he must rely not upon the Constitution alone but also upon the laws and treaties of the United States. When, to take a common example from actual practice, he makes an executive agreement for the distribution of United States funds to foreign countries, he relies not merely upon the Constitution but also upon the provisions of the Freign Assistance Act of 1961, 22 U.S.C. 2151, et seq.

It should appear from the foregoing that executive agreements made under the Constitution alone and those made under the Constitution and the laws and treaties of the United States comprise the totality of executive agreements which the President can now lawfully make; and since both categories are covered by the exception in S. 632, I am at a loss to explain what remains to be covered by the other provisions of the bill.

The one possible explanation does not seem to me a plausible estimate of the congressional intent. It might be argued that S. 632 is meant to be an implied grant of authority to the President to enter into unconditional executive agreements with any substantive content whatever—so long as those which deal with matters not within his constitutional power, or not previously placed within his power by statute or treaty, are submitted to the Congress pursuant to the concurrent resolution feature of the legislation. This would amount to an increase rather than a decrease of the President's executive agreement authority. I think it unlikely that was intended; and even if it were intended, we would oppose it. There is no reason why the need for congressional approval, when it exists, cannot be met—as it is under current law—through the normal legislative process rather than by the artificial concurrent resolution procedure which S. 632, if interpreted as I have just described, would establish.

The fact that Section 5 of S. 632 swallows the rest of the bill can only be understood (if not entirely explained) by referring to the history of its development. Last year, a bill similar to S. 632 was introduced, exempting only executive agreements made pursuant to "specific" provisions of the Constitution or laws. S. 3830, 93d Cong., 2d Sess. That language would, of course, have left substantial areas of lawful executive agreement upon which the remainder of the bill could operate. The Senate Judiciary Committee reported the bill out, but deleted the requirement that authority be "specific." It explained that the change was made, "to make clear that the bill would not deprive the President of any implied powers which he may have to make executive agreements." S. Rep. 93-1286 on S. 3830. The bill thus amended was reported out without hearings and passed the Senate without debate. 120 Cong. Rec. S19867-69 (Nov. 21, 1974, daily ed.). It is consistent with this history to surmise that, in its concern to preserve implied Presidential authority, the Judiciary Committee overlooked the fact that it was reducing the effective scope of the bill to coverage of only unauthorized agreements.

The other bill before you, S. 1251, has a broader scope than S. 632. Indeed, it can be read as being wider than existing understandings of what normally constitute executive agreements. Section 3 of S. 1251 defines executive agreement to include "any bilateral or multilateral international agreement or understanding, formal or informal, written or verbal, other than a treaty, which involves, or the intent is to leave the impression of, a commitment of manpower, funds, information, or other resources of the United States." No exceptions are made. Under Section 2(a) all such agreements must be transmitted to the Senate and are subject to a 60-day waiting period unless the Senate sooner passes a resolution of approval or disapproval. (The Ho[illegible] S. 1251.)

I had intended to say that the Department of Justice is rarely involved in the making of executive agreements, and thus would leave discussion of the practical problems involved in the 60-day waiting period to other agencies. With the broad definition that S. 1251 contains, however, I am not sure such a statement would be accurate. On any one day there may be innumerable informal arrangements made by individuals or units in the Immigration and Naturalization Service, the Drug Enforcement Administration and the Federal Bureau of Investigation which might be considered to fall within the definition. For example, an oral agreement between I&NS officials and Mexican authorities that the Service will deliver over certain illegal immigrants on a certain day at a certain time could be thought to qualify.

I will indeed leave it to the other agencies to expand further upon such examples, since I am sure their problems would be even greater than ours. I do want to note however, my strong view that the definition of S. 1251 is inadvisably broad—so broad that, if interpreted literally, it is plainly unworkable. You should also be aware, moreover, that even at this cost it does not achieve the apparent intent of eliminating all doubt that every possible agreement must be submitted to the Congress. That isto say, one can reasonably take the position that "informal understandings" do not ordinarily constitute, or even give the impression of, a *binding* commitment of the United States to provide manpower, funds, information, or other resources. In other words, your dependence upon good-faith submission of important agreements by the executive branch would not be eliminated by this strange definition; nothing will have been accomplished but a muddying of the waters.

Thus, each of the two bills presents at the outset difficult questions of construction. In this respect, they represent extremes. S. 632 is on its face so narrow that one is at a loss to construe it sensibly without making it meaningless; S. 1251 is so broad that, if taken literally, it could create serious administrative problems for the executive branch.

Beyond this, both bills raise fundamental issues concerning the proper roles of Congress and the Executive. They have the potential of precipitating constitutional conflict affecting virtually the entire field of our foreign affairs. No one can deny that in many areas Congress can and does legislate standards for the making of executive agreements. A good example is the P.L. 480 program, under which the President is authorized to negotiate and carry out agreements with friendly countries for the purchase and sale of agricultural commodities. 7 U.S.C. 1701. Congress has frequently reviewed and amended that program, through normal legislative methods, to adapt it to changing conditions. Congress has set the standards, in as much detail as it wished, for making the agreements, and the executive branch has carried out the law. By thus focusing on a particular subject area over which it has clear legislative competence under the Constitution, Congress has carefully and intelligently controlled the executive agreement process.

Unfortunately, the bills before us do not legislate on specific substantive areas of concern to the Congress; but attempt to subject all executive agreements to a requirement of subsequent Congressional approval. In doing this, they carry Congress beyond its proper function of making laws under Article I of the Constitution and thrust it into the role of executing the laws, reserved to the President under Article II. The balance of my testimony will be devoted to a discussion of the precise manner in which these bills would violate specific provisions of the Constitution; but my basic appeal is to the inherent repugnance of the overall scheme to our accepted constitutional framework. As our [illegible] laws, within its fields of competent authority, in as much detail as it desires; the President executes those laws,

Approved For Release 2003/02/27 : CIA-RDP86B00269R000600030001-1

Approved For Release 2003/02/27 : CIA-RDP86B00269R000600030001-1

with due regard for the congressional intent; and the Judiciary determines the laws to be of no effect when they exceed congressional authority and determines the President's application of the laws to be of no effect when it is inconsistent with valid congressional prescription. This rough division of government power is what the doctrine of separation of powers is all about.

Under this proposed legislation, however, the Congress would seek to control executive action not by passing laws before the fact, but by requiring authorized actions under existing law to be submitted for its approval. These bills are the approximate equivalent, in the foreign affairs field, of a law that would purport to render all executive orders and regulations under domestic law ineffective until presented for congressional endorsement. I would hope it is apparent upon the face of the matter—and even to one who is not familiar with the specific clauses of the Constitution violated by such an arrangement—that this is simply not the manner in which the United States Government is supposed to function. When, under such an arrangement, the Congress attempts to deny effect to an executive action validly taken under existing law, it is usurping the function of the Executive; and when it purports to invalidate such action on the basis that the action was not authorized, it is usurping the function of the Judiciary. I would hope, in short, that it would be entirely clear, even without the more technical discussion which I am about to embark upon, that when the Constitution established a system in which the Congress makes the laws and the President executes them, it did not envision or permit a system in which the Congress could pass a law which says: "The President may do anything within his authority we have not otherwise prohibited, so long as he submits all of that action for our prior approval."

Turning now to a more legalistic discussion of the problem: As the bills are drafted, there are two basic constitutional defects. First, Congress cannot in any manner restrict or modify powers which the Constitution reserves to the President alone. Second, as to those Presidential powers—conferred by the Constitution, treaty or statute—which are subject to congressional restriction or modification, Congress cannot impose such restriction or modification by the device of concurrent resolution or Senate resolution. As far as the first point is concerned, it is clear that some subjects, such as the recognition of foreign governments or the conclusion of operational arrangements on the battlefield are exclusively Presidential in nature and not subject to limitation by Congress, even by statute. See Art. II, sections 2 and 3; *United States* v. *Belmont*, 301 U.S. 324 (1937); *United States* v. *Pink*, 315 U.S. 203, 229 (1942). *Cf. Ex parte Milligan*, 71 U.S. 2, 139 (1866). It would be difficult to anticipate or describe all of the circumstances in which the President's exclusive powers might form the subject matter of executive agreements. In practice they have done so rarely, and executive agreements of this sort constitute by far the smallest category. The 1973 Report of your Subcommittee (p. 34) includes an ingenious and not unlikely example: an executive agreement to grant a Presidential pardon to an alien in this country in exchange for like treatment of an American abroad. Since the pardon power is vested in the President alone (see Art. II, section 2), it would be difficult to see how Congress could negate such an agreement, even by statute passed over the President's veto. *A fortiori* the concurrent resolution and Senate veto established by the present bills would be ineffective. With respect to executive agreements asserting only exclusive Presidential powers, then, the present bills would contravene the Constitution.

I turn next to agreements whose subject matter involves Presidential powers (conferred by the Constitution, statute or treaty) which are constitutionally subject to congressional control. In my view it is clear that such agreements are valid and binding unless Congress limits the Presidential powers in question by the one means available to it under the Constitution: legislation passed by both Houses and submitted to the President for his approval. Congress cannot repeal or amend or restrict Presidential powers by concurrent resolution as provided in S. 632 or by resolution of the Senate alone as provided in S. 1251, since this would distort the constitutional legislative process by avoiding the President's veto.

The difficulty is not solved by the fact that this legislation itself must pass over the President's veto. For this legislation does not purport to remove Presidential power to enter executive agreements (it is doubtful that it could constitutionally do so) or Presidential power to act in all of those substantive areas which the category of executive agreements we are now discussing might deal with. The legislation would leave the power, but subject it to a congressional restriction which is simply not envisioned by the Constitution. One might reasonably ask, if the Congress can do the greater (take away the power entirely), why can it not do the lesser (subject the use of the power to congressional approval)? I can best explain by an analogy to the law of property: A person is entirely free under the common law to refuse to sell his real property, but if he chooses to sell it he cannot subject it to continuing restrictions, so-called "restraints on alienation," which are inconsistent with full title in the new owner. So also, the Congress has authority to deprive the President completely of substantive powers in a number of fields; but unless it is willing to take that drastic step, it cannot leave the powers intact and yet subject them to formal restrictions other than those that can subsequently be imposed by the normal legislative process. The need for this doctrine should be obvious: Without it, the carefully drawn legislative procedure of the Constitution could be entirely evaded by a congressional grant of enormously broad powers and authorities to the President, subject only to the condition that Congress approve their exercise by concurrent resolution. In effect, our laws would thereafter be made by the Congress alone, without any effective Presidential participation.

The language and history of the Constitution indicates that the veto power of the President was intended to apply to *all* actions of Congress which have the force of law. It would be difficult to conceive of language and history which make the point more explicitly. Two provisions of Article I, section 7 are involved. The Constitution provides, first, that every bill which passes the House of Representatives and the Senate, shall, before it becomes a law, be presented to the President for his approval or disapproval. If disapproved it does not become law unless repassed by a two-thirds vote of each House. (Art. I, sec. 7, clause 2).

The problem that we face today was foreseen by the Framers. At the Constitutional Convention it was recognized that Congress might evade the above-described provision by passing "resolutions" (the precise language of these proposals) rather than the bills. During the debate on this clause, James Madison observed that

> "if the negative of the President was confined to bills; it would be evaded by acts under the form and name of Resolution, votes &c * * *."

Madison believed that additional language was necessary to pin this point down and therefore

> "proposed that 'or resolve' should be added after 'bill' * * * with an exception as to vote of adjournment &c."

Madison's notes show that "after a short and rather confused conversation on the subject," his proposal was, at first, rejected. 2M. Farrand, *The Records of the Federal Convention of 1787*, 301-02 (1937 Rev. ed.) ("Farrand"). However, on the last day of the convention's session, Mr. Randolph, "having thrown into a new form" Madison's proposal, renewed it. It passed by a vote of 9-1. 2 Farrand 303-05. Thus, the Constitution today provides—not in clause 2

Approved For Release 2003/02/27 : CIA-RDP86B00269R000600030001-1

Approved For Release 2003/02/27 : CIA-RDP86B00269R000600030001-1

of section 7, dealing with the passage of legislation (which has its own Presidential veto provision), but as an entirely separate clause 3—the following:

> "Every Order, Resolution, or Vote to which the Concurrence of the Senate and House of Representatives may be necessary (except on a question of Adjournment) shall be presented to the President of the United States; and before the Same shall take Effect, shall be approved by him, or being disapproved by him shall be repassed by two-thirds of the Senate and House of Representatives, according to the Rules and Limitations prescribed in the Case of a Bill."

It should be apparent from the wording of this provision, and from its formulation as a separate clause apart from the clause dealing with legislation, that it was intended to protect the President against all congressional evasions of his veto power, and not merely those that were formally connected with the legislative process. Of course, the fact that it refers only to concurrent resolutions, and not to one-House resolutions such as S. 1251 would provide, was not meant to sanction avoidance of the Presidential veto by the latter process; rather, the omission was meant to exclude from the veto requirement those instances in which, under the Constitution, the Senate has authority to take binding action on its own—to wit, in ratifying treaties and in confirming the appointment of Federal officers (Article II, section 2). The Framers probably never even envisioned that, apart from those constitutionally prescribed instances, a single House would purport to take any legally effective action on behalf of the entire Congress. In other words, the provision of S. 1251 for a one-House resolution is not in literal violation of section 7, clause 3 of the Constitution only because it has, in addition to the defect which that provision addresses, the defect of being an unlawful delegation of congressional power to one of its Houses.

The purpose of the veto was not merely to prevent bad laws but to protect the powers of the President from inroads of the kind represented by S. 632 and S. 1251. Leading participants in the Convention of 1787, such as James Madison, Gouverneur Morris and James Wilson, pointed out that the veto would protect the office of President against "encroachments of the popular branch" and guard against the legislature "swallowing up all the other powers." 2 Farrand 299–300, 586–87. In *The Federalist* (No. 73), Hamilton states that the primary purpose of conferring veto power on the President is "to enable him to defend himself." Otherwise he "might be gradually stripped of his authorities by successive resolutions, or annihilated by a single vote." We are faced in this proposed legislation with precisely the situation these quotations describe. The actions of the President in carrying out one of his principal functions—as the sole instrument for the actual conduct of our foreign relations—will be subjected to impairment and reversal by congressional vote without protection of the Presidential veto.

Despite the explicit language of the Constitution and the clear evidence of the original understanding contained in the remarks of the Framers, statutes have existed for some years which provide for congressional action by concurrent resolution. Moreover, although Presidents have vetoed proposed laws because of the unconstitutionality of such provisions, and have even more frequently registered their constitutional objections in signing statements, they have sometimes accepted such provisions in silence, and have on several occasions even proposed legislation containing them. This is to be explained, one presumes, by the Presidential determination of acute need for legislation which could not be obtained without the objectionable provision. Former Justice (and before that Attorney General) Jackson recounted that when President Roosevelt signed without objection the Lend Lease Act of 1941, 55 Stat. 32, he addressed an internal memorandum to the Attorney General stating, for the record, his view that section 3(c) and the House veto provisions [illegible] importance of the legislation he felt constrained to sign the bill in spite of the fact that in his view section 3(c) purported to give legislative effect to congressional action not presented to the President and this violated Article I, section 7 of the Constitution. Jackson, *A Presidential Legal Opinion*, 66 Harv. L. Rev. 1353, 1357–58 (1953).

The argument suggests itself that repeated congressional use of such provisions, and occasional Presidential acceptance, comprise a constitutional practice which establishes their validity. This cannot be so. Custom or practice may indeed give conclusive content to vague or ambiguous constitutional provisions, but it cannot overcome the explicit language of the text—especially when that text is supported by historical evidence that shows it means precisely what it says. Moreover, if one is to rely upon practice, it must be both accepted and long standing. Repeated Presidential objections destroy the first of these characteristics, and the clear record of history eliminates the second. Use of the concurrent resolution is in fact a very recent phenomenon, and flatly contradicts what was the accepted understanding and usage until the second third of this century. A careful analysis of the historical practice was compiled by the Senate Judiciary Committee in 1897. It shows that from the First Congress through the nineteenth century concurrent resolutions were limited to matters "in which both Houses have a common interest, but with which the President has no concern." They never "embraced legislative provisions proper." S. Rep. No. 1335, 54th Cong., 1st Sess. 6 (1897). The report concluded that the Constitution requires that resolutions must be presented to the President when "they contain matter which is properly to be regarded as legislative in its character and effect." *Id.* at 8, quoted in part in 4 Hinds' *Precedents of the House of Representatives* § 3483. A concise formulation of the understanding may be found in Congressman Mann's statement that a concurrent resolution has "no force beyond the confines of the Capitol". 42 Cong. Rec. 2661 (1908).

It was not until the 1930's that enactments of the present sort first appeared, see R. Giannane, *The Control of Federal Administration by Congressional Resolutions and Committees*, 66 Harv. L. Rev. 569, 575 (1953), and not until very recent years that they became fairly frequent. It has been recognized, even by their supporters, that they raise difficult constitutional issues. See, *e.g.*, Memorandum of Senator Javits on the Foreign Assistance Act of 1961, 107 Cong. Rec. 15039 (1961); L. Henkin, *Foreign Affairs and the Constitution* 120–123 (1972). If, then, we are to give any credit to constitutional custom, we believe that it argues persuasively against the validity of congressional action by concurrent resolution. The tradition begun with the adoption of the Constitution and continued uniformly until relatively recent years is entitled to far greater weight than a disputed current practice.

I may add, that while the present bills present the occasion for our expression of concern about the concurrent resolution, they alone are by no means what prompts it. The Office of Legal Counsel has been concerned for some time with the dramatic increase in the number of legislative proposals which provide for concurrent resolutions, one-House vetos, and committee vetos. Unless the Congress comes to see the necessity of adhering to the clear language of the Constitution I fear that erosion of the separation of powers in this fashion will continue rapidly to accelerate. It is for this reason that I have discussed the point in such depth.

* * * * * * *

I apologize, Mr. Chairman, for the length of this statement which, as long as it is, does not exhaust the difficult and important problems with which it deals. For both the reasons I have discussed—the inappropriate scope of coverage and [illegible] and the House veto provisions—we oppose the enactment of both S. 632 and S. 1251.

Approved For Release 2003/02/27 : CIA-RDP86B00269R000600030001-1

Approved For Release 2003/02/27 : CIA-RDP86B00269R000600030001-1

ANNEX B

AUTHORIZING LEGISLATION

Public Law 92-352
92nd Congress, H. R. 14734
July 13, 1972

An Act

Foreign Relations Authorization Act of 1972.

To provide authorizations for certain agencies conducting the foreign relations of the United States, and for other purposes.

Be it enacted by the Senate and House of Representatives of the United States of America in Congress assembled, That this Act may be cited as the "Foreign Relations Authorization Act of 1972".

TITLE VI—STUDY COMMISSION RELATING TO FOREIGN POLICY

FINDINGS AND PURPOSE

SEC. 601. It is the purpo of this title to establish a study commission which will submit fi ings and recommendations to provide a more effective system for the formulation and implementation of the Nation's foreign policy.

COMMISSION ON THE ORGANIZATION OF THE GOVERNMENT FOR THE CONDUCT OF FOREIGN POLICY

SEC. 602. (a) To carry out the purpose of section 601 of this Act, there is established a Commission on the Organization of the Government for the Conduct of Foreign Policy (hereafter referred to in this title as the "Commission").

(b) The Commission shall be composed of the following twelve members:

(1) four members appointed by the President, two from the executive branch of the Government and two from private life;

(2) four members appointed by the President of the Senate, two from the Senate (one from each of the two major political parties) and two from private life; and

(3) four members appointed by the Speaker of the House of Representatives, two from the House of Representatives (one from each of the two major political parties) and two from private life.

(c) The Commission shall elect a Chairman and a Vice Chairman from among its members.

(d) Seven members of the Commission shall constitute a quorum. Any vacancy in the Commission shall not affect its powers, but shall be filled in the same manner in which the original appointment was made.

Compensation.

(e) Each member of the Commission who is not otherwise employed by the United States Government shall receive $145 a day (including traveltime) during which he is engaged in the actual performance of his duties as a member of the Commission. A member of the Commission who is an officer or employee of the United States Government shall serve without additional compensation. All members of the Commission shall be reimbursed for travel, subsistence, and other necessary expenses incurred by them in the performance of their duties.

DUTIES OF THE COMMISSION

SEC. 603. (a) The Commission shall study and investigate the organization, methods of operation, and powers of all departments, agencies, independent establishments, and instrumentalities of the United States Government participating in the formulation and implementation of United States foreign policy and shall make recommendations which the Commission considers appropriate to provide improved governmental processes and programs in the formulation and implementation of such policy, including, but not limited to, recommendations with respect to—

(1) the reorganization of the departments, agencies, independent establishments, and instrumentalities of the executive branch participating in foreign policy matters;

(2) more effective arrangements between the executive branch and Congress, which will better enable each to carry out its constitutional responsibilities;

(3) improved procedures among departments, agencies, independent establishments, and instrumentalities of the United States Government to provide improved coordination and control with respect to the conduct of foreign policy;

(4) the abolition of services, activities, and functions not necessary to the efficient conduct of foreign policy; and

(5) other measures to promote peace, economy, efficiency, and improved administration of foreign policy.

Report to Congress; termination.

(b) The Commission shall submit a comprehensive report to the President and Congress, not later than June 30, 1974, containing the findings and recommendations of the Commission with respect to its study and investigation. Such recommendations may include proposed constitutional amendments, legislation, and administrative actions the Commission considers appropriate in carrying out its duties. The Commission shall cease to exist on the thirtieth day after the date on which it files the comprehensive report under this subsection.

POWERS OF THE COMMISSION

Hearings.

SEC. 604. (a) The Commission or, on the authorization of the Commission, any subcommittee or member thereof, may, for the purpose of carrying out the provisions of this title, hold such hearings and sit and act at such times and places, administer such oaths, and require, by subpena or otherwise, the attendance and testimony of such witnesses and the production of such books, records, correspondence, memorandums, papers, and documents as the Commission or such subcommittee or member may deem advisable. Subpenas may be issued under the signature of the Chairman of the Commission, of any such subcommittee, or any designated member, and may be served by any person designated by such Chairman or member. The provisions of sections 102 through 104 of the Revised Statutes of the United States (2 U.S.C. 192–194) shall apply in the case of any failure of any witness to comply with any subpena or to testify when summoned under authority of this section.

Subpenas.

(b) The Commission is authorized to secure directly from any executive department, bureau, agency, board, commission, office, independent establishment, or instrumentality information, suggestions, estimates, and statistics for the purposes of this title. Each such department, bureau, agency, board, commission, office, establishment, or instrumentality is authorized and directed, to the extent authorized by law, to furnish such information, suggestions, estimates, and statistics directly to the Commission, upon request made by the Chairman or Vice Chairman.

STAFF OF THE COMMISSION

SEC. 605. (a) The Commission shall have power to appoint and fix the compensation of such personnel as it deems advisable, without regard to the provisions of title 5, United States Code, governing appointments in the competitive service, and without regard to the provisions of chapter 51 and subchapter III of chapter 53 of such title relating to classification and General Schedule pay rates.

80 Stat. 378.
5 USC 101 et seq.
5 USC 5101, 5331.

Approved For Release 2003/02/27 : CIA-RDP86B00269R000600030001-1

Approved For Release 2003/02/27 : CIA-RDP86B00269R000600030001-1

86 STAT. 499

(b) The Commission is authorized to procure the services of experts and consultants in accordance with section 3109 of title 5, United States Code, but at rates not to exceed the daily rate paid a person occupying a position at GS-18.

80 Stat. 416.

EXPENSES OF THE COMMISSION

SEC. 606. There are authorized to be appropriated such sums as may be necessary to carry out the provisions of this title.

Approved July 13, 1972.

Public Law 93-126
93rd Congress, H. R. 7645
October 18, 1973

An Act

87 STAT. 451

To authorize appropriations for the Department of State, and for other purposes.

Be it enacted by the Senate and House of Representatives of the United States of America in Congress assembled, That this Act may be cited as the "Department of State Appropriations Authorization Act of 1973".

Department of State Appropriations Authorization Act of 1973.

STUDY COMMISSION RELATING TO FOREIGN POLICY

SEC. 4. Section 603(b) of the Foreign Relations Authorization Act of 1972 (22 U.S.C. 2823(b)), relating to the reporting date for the Commission on the Organization of the Government for the Conduct of Foreign Policy, is amended by striking out "June 30, 1974" and inserting in lieu thereof "June 30, 1975".

ANNEX C

LIST OF WITNESSES

June 25, 1973

ZBIGNIEW BRZEZINSKI—*Professor*, Columbia University
HERMAN KAHN—*Director*, The Hudson Institute
McGEORGE BUNDY—*President*, The Ford Foundation

July 30, 1973

Panel: Members from the United Nations Association—United States of America, National Policy Panel on Foreign Policy Decision Making.

- HOWARD C. PETERSON—Chairman of the Board, The Fidelity Bank, Philadelphia
- BERNARD L. GLADIEUX—*Vice President and Executive Director;* Knight, Gladieux & Smith, Inc.
- THOMAS L. HUGHES—*President*, Carnegie Endowment for International Peace
- DAVID A. MORSE—*Partner*, Surrey, Karask, Morse & Sehan
- ADAM YARMOLINSKI—*Ralph Waldo Emerson University Professor*, University of Massachusetts
- HUGH SMYTHE—Department of Sociology, Brooklyn College and the Graduate Center, City University of New York
- ELMORE JACKSON—*Vice President for Policy Studies* (UNA-USA)
- DEAN RUSK—*Professor*, University of Georgia Law School

September 17, 1973

Panel #1: Intelligence and Information for Policy and Operations

- RAY C. CLINE—*Director*, Bureau of Intelligence and Research, Department of State
- RODGER P. DAVIES—*Deputy Assistant Secretary of State*, Bureau of Near Eastern and South Asian Affairs, Department of State
- RICHARD L. SNEIDER—*Deputy Assistant Secretary of State*, Bureau of East Asian and Pacific Affairs, Department of State
- SAMUEL C. FRY, JR.—*Director*, Operations Center, Executive Secretariat, Department of State

Panel #2: Overseas Establishments

- WILLIAM G. BOWDLER—*Deputy Assistant Secretary of State*, Bureau of Inter-American Affairs, Department of State
- LEWIS HOFFACKER—*Special Assistant to the Secretary and Coordinator for Combating Terrorism*, Department of State
- [illegible]—*Vice Director*, Bureau of African Affairs, Department of State

Approved For Release 2003/02/27 : CIA-RDP86B00269R000600030001-1

Approved For Release 2003/02/27 : CIA-RDP86B00269R000600030001-1

EDWARD L. PECK—*Special Assistant to the Under Secretary of State for Political Affairs*, Department of State
THOMAS W. MCELHINNEY—*Inspector General of the Foreign Service*

Panel #3: Domestic Interests and Foreign Affairs
W. MARSHALL WRIGHT—*Assistant Secretary of State for Congressional Relations*, Department of State
JULIUS L. KATZ—*Deputy Assistant Secretary of State*, Bureau of Economic and Business Affairs, Department of State.
ABRAHAM KATZ—Director, Office of OECD Affairs, Department of State
ANTHONY GEBER—*Director*, Office of Economic Policy, Bureau of East Asian and Pacific Affairs, Department of State

Panel #4: Personnel for Foreign Affairs
WILLIAM O. HALL—*Director General*, Foreign Service
MARY S. OLMSTEAD—*Deputy Director of Personnel for Policy, Classification and Evaluation*, Department of State
HEYWARD ISHAM—*Minister-Counselor*, American Embassy in Paris
HARRY A. BARNES, JR.—*Deputy Executive Secretary*, Executive Secretariat, Department of State

October 15, 1973

JOHN A. HANNAH—*Former Administrator*, Agency for International Development (AID)
MICHAEL P. BALZANO—*Director*, ACTION/Peace Corps
NICHOLAS CRAW—*Associate Director Designate*, ACTION/Peace Corps
DONALD HESS—*Associate Director for International Operations*, ACTION/Peace Corps
WALTER C. HOWE—*Deputy Director*, ACTION/Peace Corps
MAURICE T. WILLIAMS, *Administrator*, AID
JAMES R. FOWLER—*Special Assistant to the Director*, USIA

October 16, 1973

JAMES KEOGH—*Director*, USIA
EUGENE P. KOPP—*Deputy Director*, USIA
G. RICHARD MONSEN—*Special Assistant to the Director*, USIA

November 19, 1973

WILLIAM E. COLBY—*Director*, Central Intelligence
JOHN WARNER—*General Counsel*, CIA
WILLIAM J. PORTER—*Under Secretary of State for Political Affairs*
RAY C. CLINE—*Director*, Bureau of Intelligence and Research, Department of State

November 20, 1973

ALBERT C. HALL—*Assistant Secretary of Defense for Intelligence*

Vice Admiral VINCENT DE POIX—*Director*, Defense Intelligence Agency
Maj. Gen. WILLIAM M. SCHONING, USAF, *Director of Policy Planning*, ISA, Department of Defense

December 14, 1973

JAMES R. SCHLESINGER—*Secretary of Defense*
ROBERT C. HILL—*Assistant Secretary of Defense for International Security Affairs*, Department for State
Maj. Gen. WILLIAM M. SCHONING, USAF—*Acting Deputy Assistant Secretary for Policy Plans and National Security Council Affairs*, Department of Defense
Adm. THOMAS H. MOORER—*Chairman*, Joint Chiefs of Staff
Vice Adm. RAY PEET—*Head of the Security Assistance Agency and Deputy Assistant Secretary, Security Assistance*, Department of Defense
Lt. Gen. LOUIS T. SEITH—*Director of the Plans and Policy Directorate*, JCS
DENNIS J. DOOLIN—*Deputy Assistant Secretary of Defense*, ISA
JAMES H. NOYES—*Deputy Assistant Secretary of Defense*, ISA
ROGER E. SHIELDS—*Deputy Assistant Secretary of Defense*, ISA

February 25, 1974

Hon. GEORGE P. SHULTZ—*Secretary of the Treasury*
Hon. FREDERICK B. DENT—*Secretary of Commerce*
Hon. EARL L. BUTZ—*Secreaary of Agriculture*
Hon. WILLIAM D. EBERLE—*President's Special Representative for Trade Negotiations*

February 26, 1974

PETER M. FLANIGAN—*Executive Director*, Council on International Economic Policy (CIEP)
Hon. WILLIAM J. CASEY—*Under Secretary of State for Economic Affairs on International Economic Policy*, Department of State.

March 25, 1974

Panel: Former Officials
JOHN J. MCCLOY—Partner, Milbank, Tweed, Hadley & McCloy
GEORGE BALL—Senior partner, Lehman Bros.
CLARK CLIFFORD—Partner, Clifford & Miller

March 26, 1974

Panel: Young Government Officers
PETER O. SUCHMAN—*Director*, Office of Trade Policy, Department of the Treasury

Approved For Release 2003/02/27 : CIA-RDP86B00269R000600030001-1

Approved For Release 2003/02/27 : CIA-RDP86B00269R000600030001-1

THOMAS D. BOYATT—*Director*, Office of Cypriot Affairs, Bureau of Near Eastern and South Asian Affairs, Department of State
KENNETH H. TORP—*FSO*, Urban Mass Transportation Group, Department of Transportation
MICHAEL A. G. MICHAUD—Office of Iranian Affairs, Department of State
SANDRA VOGELGESANG—Bureau of Economic and Business Affairs, Department of State
RAYMOND F. SMITH—Bureau of African Affairs, Department of State

Panel: Young Former Government Officials
WALTER B. SLOCOMBE—*Partner*, Caplin & Drysdale
ANTHONY K. LAKE—*Director*, International Voluntary Services
C. FRED BERGSTEN—*Senior Fellow*, The Brookings Institution
ROGER MORRIS—*Program Director*, Humanitarian Policy Studies, Carnegie Endowment for International Peace
JAMES WOOLSEY—*Attorney*, Shea & Gardner

April 22, 1974

Congressman RICHARD BOLLING—*Chairman*, Select Committee on Committees, U.S. House of Representatives

Panel: Academic Experts on Congress
RANDALL B. RIPLEY—*Chairman of Department of Political Science*, Ohio State
ALTON FRYE—*Director*, Institute for Congress Project, Carnegie Endowment for International Peace
Dr. LEWIS A. DEXTER—*Fellow*, Woodrow Wilson International Center for Scholars, The Smithsonian Institution

Panel: Is Congress Equipped To Fulfill Its Responsibilities in the Formulations and Implementation of Foreign Policy?
CARL MARCY—*Former Staff Director*, Senate Foreign Relations Committee
PAT M. HOLT—*Staff Director*, Senate Foreign Relations Committee
MARIAN A. CZARNECKI—*Chief of Staff*, House Foreign Affairs Committee
CHARLES N. GELLNER—*Chief*, Foreign Affairs Division, Congressional Research Division, The Library of Congress
J. KENNETH FASICK—*Director*, International Division, General Accounting Office

April 23, 1974

JEROME LEVINSON—*Counsel*, Subcommittee on Multinational Corporations, Senate Foreign Relations Committee

Panel: Coordinating Foreign Economic and Agricultural Policy
Senator JAMES B. PEARSON
Senator JACOB K. JAVITS
Senator CLIFFORD P. HANSEN
Congressman BARBER B. CONABLE, JR.

May 20, 1974

Panel: The Constitution and Foreign Policy
LOUIS HENKIN—*Hamilton Fish Professor of Constitutional Law*, Columbia University
GERHARD CASPER—*Professor of Law and Political Science, University of Chicago*
THOMAS EHRLICH—*Dean*, Stanford University Law School
RICHARD FALK—*Albert Milbank Professor of International Law and Practice*, Princeton University
EUGENE ROSTOW—*Sterling Professor of Law and Public Service*, Yale University

Panel: Congressional Budgeting, Appropriations and Oversight of Foreign Policy Expenditures
Senator EDMUND S. MUSKIE
Senator CHARLES H. PERCY
Senator LAWTON CHILES
Congressman JOHN B. ANDERSON

Panel: The Role of the President in Foreign Policy
ARTHUR SCHLESINGER—*Albert Schweitzer Professor of Humanities*, City University of New York
LOUIS W. KOENIG—*Professor of Government*, New York University.
HARRY C. MCPHERSON—*Attorney*
Senator CHARLES MCC. MATHIAS, JR.
WILLIAM G. MILLER—*Staff Director, Special Committee to Terminate the National Emergency*

June 17, 1974

Panel: The Foreign Policy Role of Party Leaders in Congress
Senator MIKE MANSFIELD—*Majority Leader*, U.S. Senate
Senator HUGH SCOTT—*Minority Leader*, U.S. Senate
Congressman THOMAS P. O'NEILL, JR.—*Majority Leader*, House of Representatives
Congressman JOHN B. ANDERSON—*Chairman*, House Republican Conference

June 18, 1974

Panel: Constitutional Aspects of Congressional-Executive Relations
JOHN MURPHY—*Professor of Law*, University of Kansas
STANLEY FUTTERMAN—*Associate Professor of Law*, New York University School of Law
RITA HAUSER—*Attorney*
W. TAYLOR REVELEY III—*Attorney*
RICHARD FRANK—*Director of the International Project, Center for Law and Social Policy*

Panel: National Security
Congressman CLEMENT J. ZABLOCKI
Senator STUART SYMINGTON
Senator SAM P. NUNN
Congressman WILLIAM G. BRAY

Approved For Release 2003/02/27 : CIA-RDP86B00269R000600030001-1

Approved For Release 2003/02/27 : CIA-RDP86B00269R000600030001-1

July 22, 1974

Senator J. WILLIAM FULBRIGHT—*Chairman*, Senate Foreign Relations Committee
Senator GEORGE D. AIKEN

July 23, 1974

Senator HUBERT H. HUMPHREY
Dr. FRED C. IKLE—*Director*, U.S. Arms Control and Disarmament Agency (ACDA)
ALBERT M. CHRISTOPHER—*Special Assistant to the Director and Executive Secretary*, ACDA

September 23, 1974

Panel: Some Lessons from Other Reports of Previous Commissions
ISAIAH FRANK—School of Advanced International Studies, Johns Hopkins University
JAMES FREY—Office of Management and Budget, Executive Office of the President.
ANDREW M. ROUSE—*Executive Vice President*, Insurance Co. of North America (INA) Corp.
MILTON S. EISENHOWER—*President Emeritus*, The Johns Hopkins University

September 24, 1974

ELLIOTT L. RICHARDSON—*Fellow*, Woodrow Wilson International Center for Scholars, the Smithsonian Institution
GEORGE F. KENNAN—Institute for Advanced Study, Princeton University

October 8, 1974

Public Hearings: Philadelphia, Pa.
ROBERT L. PFALTZGRAFF, Jr.—*Executive Director*, Foreign Policy Research Institue
GEORGE PACKARD—*Executive Editor*, The Evening and Sunday Bulletin
JAMES A. MICHENER—*Author and Member of U.S. Advisory Commission on Information*
HAROLD E. STASSEN—*Former Special Assistant to President Eisenhower*
JOSEPH S. CLARK—*Former U.S. Senator and Chairman*, Coalition of National Priorities and Military Policy
ARCHIBALD ALEXANDER—*Former Assistant Director*, Arms Control and Disarmament Agency
NORMAN D. PALMER—*Professor of Political Science*, University of Pennsylvania
HELEN CARROLL—*Former President*, Women's International League for Peace and Freedom, Pennsylvania Branch
HOWARD FRAZIER—*Executive Director*, Promoting Enduring Peace, Inc.
LEWIS VAN DUREN—*President*, Pennsylvania Bar Association
JEROME SHESTACK—*Chairman*, Int[illegible] Rights of Man
SAMUEL HAYES—*President*, Foreign Policy Association
COVEY T. OLIVER—*Former Assistant Secretary of State for Inter-American Affairs*
PATRICIA PARKMAN—*Policy and Legislation Secretary*, Friends Peace Committee
JAMES DOUGHERTY—*Professor of Political Science*, St. Joseph's College
PETRO DIACHENKO—*Executive Board Member of the Ukrainian Political Science Association*

November 12, 1974

Public Hearings: Atlanta, Ga.
JOHN CROWN—*Associate Editor*, Atlanta Journal
Hon. MAYNARD JACKSON—Mayor of Atlanta
RONDO CAMERON—*Fellow*, Woodrow Wilson International Center for Scholars, the Smithsonian Institution
His Excellency, JIMMY CARTER—Governor of Georgia
RICHARD WALKER—*Director*, Institute of International Studies, University of South Carolina
DAVID ANTHONY—*Chairman*, Asian Studies Department, Randolph-Macon Women's College
PAUL KATTENBURG—*Professor*, Department of Government and International Studies, University of South Carolina
PAUL BLACKSTOCK—*Professor*, Department of Government and International Studies, University of South Carolina
JEFFREY ARPAN—*Professor*, Institute of International Business, Georgia State University
HARRY H. RANSOM—*Professor*, Department of Political Science, Vanderbilt University
CRAWFORD BARNETT—*Chairman*, Atlanta Committee on Foreign Relations
STANLEY JONES—*President*, Atlanta Chapter, United Nations Association
DWIGHT FERGUSON—Atlanta Friends Committee

December 3, 1974

Public Hearings: Chicago, Ill.
ALEX R. SEITH—*Deputy Chairman*, Foreign Affairs Task Force, National Democratic Party
MORTON A. KAPLAN—*Professor of Political Science*, University of Chicago
LOWELL LIVEZEY—*Executive Director*, The World Without War Council
HAROLD G. MAIER—*Professor of Law and Director of Transnational Legal Studies*, Vanderbilt University
ROBERT McLELLAN—*Vice President*, International and Government Relations, FMC Corp.
Panel: Businessmen
PHILIP ODEEN—*Vice President for Planning*, Wilson Sporting Goods
STEVEN LAZARUS—*Executive Vice President*, Baxter Laboratories International

Approved For Release 2003/02/27 : CIA-RDP86B00269R000600030001-1

Approved For Release 2003/02/27 : CIA-RDP86B00269R000600030001-1

JAMES H. INGERSOLL—Vice President, International, Borg-Warner Corp.
Dr. ROBERT ALIBER—*Professor of International Economics*, University of Chicago Business School
EDNA ROBERTS—*Program Chairman*, Women's International League for Peace and Freedom, Chicago North Shore Branch
GEORGE D. KARCAZES—*President*, Hellenic Foundation.
EVERETTE B. HARRIS—*President*, International Monetary Market, Chicago Mercantile Exchange
DAVID P. EARLE III—*Senior Attorney*, First National Bank of Chicago
ALFRED F. MIOSSI—*Executive Vice President*, Continental Illinois National Bank & Trust Co.
MAURICE R. GREENBERG—*President*, American International Group

January 28, 1975

Public Hearings: San Francisco, Calif.
GEORGE CHRISTOPHER—*Former Mayor of San Francisco; President*, Christopher Commercial Corp.
WILLIAM M. ROTH—*Former Ambassador in Charge of Kennedy Round*, GATT Negotiations; President, Roth Properties.
ROBERT NORTH—*Professor of Political Science*, Stanford University
JOHN A. BOHN, JR.—*Vice President*, International Division, Wells Fargo Bank
DENNIS O'BRIEN—*Associate Professor of History and International Affairs;* California State University
ROBERT GOMPERTS—*President*, California Council for International Trade
Panel: International Economic Policy
THOMAS CHRISTIANSEN—*Manager*, International Trade Relations, Hewlett-Packard Co.
RICHARD HOLTON—*Dean*, Graduate School of Business Administration, University of California
B. T. ROCCA, JR.—*Director*, Pacific Commodities Exchange
HARRY ASHMORE—*Senior Fellow*, Center for the Study of Democracy
ROBERT PICKUS—*President*, World Without War Council
ROBERT ARELLANES—*Director of Ethnic Studies*, California State University
MILLIE LIVINGSTON—Women's International League for Peace and Freedom
EUGENE MIHALY—*Former Director of Planning*, the Peace Corps
JEROME DODSON—*Management Consultant, former Foreign Service Officer*
JOHN H. KLINGER—Coalition to Cut Military Spending

January 29, 1975

Public Hearings: San Francisco, Calif.
DONALD GREEN—*Associate Executive Director*, Stanford Research Institute
HENRY W. SPIELMAN—*Vice Chairman*, Executive Committee, Friends Committee on Legislation of California

Approved For Release 2003/02/27 : CIA-RDP86B00269R000600030001-1

ROGER DAVIDSON—*Professor of Political Science*, University of California at Santa Barbara
RICHARD CONLON—*Senior Vice President*, Business International Corp.
RALPH GOLDMAN—*Professor of Political Science*, San Francisco State University
Representatives of the United States Labor Party
ERNST B. HAAS—*Professor of Political Science*, University of California

March 3, 1975

Hon. HENRY KISSINGER—*Secretary of State*

March 17, 1975

General ANDREW GOODPASTER—*Consultant to the President*

March 31, 1975

Hon. WILLIAM P. ROGERS—*Former Secretary of State*
Hon. WILLIAM E. SIMON—*Secretary of Treasury*

April 3, 1975

Subcommittee Meeting
American Foreign Service Association
American Federation of Government Employees
KENNETH R. GIDDENS, *Assistant Director*, USIA (VOA)
JAMES KEOGH, *Director*, USIA

April 28, 1975

American Foreign Service Association
American Federation of Government Employees

May 12, 1975

Hon. JAMES R. SCHLESINGER—*Secretary of Defense*

Approved For Release 2003/02/27 : CIA-RDP86B00269R000600030001-1

ANNEX D

RESEARCHERS AND CONSULTANTS

The Effectiveness of Organizational Change

Principal Investigator: National Academy of Public Administration, Roy W. Crawley, Executive Director

Other Investigators: John E. Harr, Melbourne Spector, Manuel DeAngelis, Michael Harmon, Chester Crocker, Dominick DelGuidice, Leland Barrows, William T. McDonald, Erasmus H. Kloman

Reviewers: James W. Fesler, Frederick C. Mosher, Richard Barratt, Harold Seidman, Wayne Thompson, I. M. Destler, Edmund Gullion

The Adequacy of Current Organization: The Interaction of U.S. and Foreign Economics

Principal Investigator: Griffenhagen-Kroeger, Inc., Edward K. Hamilton, President

Other Investigators: Matthew Golden, Joan Ann Hochman, William Seelbach, Elizabeth Stabler, Edward Skloot, Katheryn Voight, Linda S. Graebner, Bruce Brittain, L. Peter Henschel, Anne Rightor-Thornton, Edward Graziano

Reviewers: Richard N. Cooper, Anthony Solomon, I. M. Destler, Francis Bator, Sidney Weintraub

The Adequacy of Current Organization: National Security (Defense and Arms Control)

Principal Investigator: Graham T. Allison, Harvard University

Other Investigators: John P. Crecine, Frederick A. Morris, Ted Greenwood, Thomas Garwin, John Steinbruner, Robert Coulam, Arthur Alexander, Henry S. Rowan, Gregory F. Treverton, Richard Neustadt, Jay Philip Urwitz, J. Mark Iwry, Priscilla Clapp, Henry B. Miller, Ernest May, Burton E. Rosenthal, Barry Carter, Forrest Frank, Robert Klitgaard, Robert L. Galucci, Edwin A. Deagle, Jr., Ann Karalakas

Reviewers: Francis Bator, Henry Rowen, Richard Neustadt, William Capron, Thomas Schelling, Morton Halperin, Lawrence Lynn

The Adequacy of Current Organization: Coordination in Complex Settings (South Asia)

Principal Investigators: Lloyd I. and Susanne Hoeber Rudolph, University of Chicago

Other Investigators: Philip K. Oldenburg, Roger E. Sack, Muzammel Huq, Gerald A. Heeger, Stephen P. Cohen, Stephen Blake, James W. Bjorkman, Stanley Kochanek, Charles Lenth, Barnett Rubin, Allen Emdin, Harinder Shourie, Anthony Moulton, Susan G. Hadden, Robert F. Rich, Walter Andersen

Approved For Release 2003/02/27 : CIA-RDP86B00269R000600030001-1

Approved For Release 2003/02/27 : CIA-RDP86B00269R000600030001-1

Reviewers: William Barnds, Charles E. Lindblom, Anthony K. Lake, I. M. Destler, W. Evan Howells, L. Bruce Laingen, Howard Wriggins, John Lewis, Eric Griffel, Lee T. Stull

The Adequacy of Current Organization: Global Environmental and Resource Interdependence

Principal Investigators: Joseph S. Nye/Robert O. Keohane

Other Investigators: Raymond F. Hopkins, Elihu Bergman, Gordon MacDonald, Ann Hollick, Irvin Bupp, J. C. Darian, Eugene Skolnikoff, Thomas Schelling, Victor Basiuk, Alton Frye, Dixon Long, Ernst B. Haas, John Ruggie, Abram Chayes

Reviewers: Harvey Brooks, James Grant, Henry Nau, Roger Williams, Graham T. Allison, I. M. Destler, Nathaniel McKitterick

The Conduct of Routine Relations (Latin America)

Principal Investigator: Abraham F. Lowenthal (Council of Foreign Relations, and Center for International Affairs, Princeton)

Other Investigators: Edward Gonzalez, Harry Weiner, Robert Pastor, Gregory F. Treverton, Roger Sack, Donald Wyman, Marie Jones, Ernest May

Reviewers: Joseph S. Nye, Stephen P. Krasner, Harrison Wagner, Stephen Spiegel, Robert Trice, I. M. Destler, Anthony K. Lake, Morton Halperin, Roger Morris, William D. Rogers, Harry Schaludeman, Graham T. Allison

Minimizing Irrationality in Decision-Making

Principal Investigator: Alexander L. George (Stanford Univ.)

Other Investigators: David K. Hall, Charles Herrmann, Margaret Herrman, Ole Holsti, David Homburg, Richard Smoke, Robert Keohane

Congressional Survey

Principal Investigator: Roger Majak (Commission Staff)

Other Investigators: William B. Carter III, Philip Marcus, D. Alan Rudlin, James Schwartz, Margaret E. G. Vanderhye

Consultants: Booz, Allen and Hamilton, Roger P. Davidson, Lewis A. Dexter, John Kingdon, Donald Matthews, Warren Miller, Institute for Social Research (University of Michigan)

Problems in the Conduct of United States Foreign Policy: A Compilation of Recent Critiques

Principal Investigator: J. Daniel O'Flaherty

Survey of Previous Reports on Organizational Reform in the Foreign Affairs Community

Principal Investigator: John Elting Treat (Commission Staff)

The Future Environment

Principal Investigator: Peter L. Szanton (Commission staff)

Other Investigators: Ernest May, Francis Bator, Jean Meyer, David Apter, Karl Deutsch, Robert R. Bowie, Samuel P. Huntington, Lawrence Krause, Franklin Lindsay, Abraham F. Lowenthal, Edwin O. Reischauer, Adam B. Ulam

Intelligence Analytical Issue Papers

Principal Investigator: William R. Harris, Jr.

Other Investigators: William Barnds, Robert Macy, Frank Schaf, Clinton Kelly, Taylor Belcher, Th[illegible] Chester Cooper, R. Jack Smith, John Huizenga, Laurence Lynn, Harry Ransom, Hugh Cunningham, John Bross

Reviewers: John Huizenga, Laughlin Campbell, Ray Cline, Paul Blackstock, Laurence Lynn, Robert Kiley

All-Source Study

Principal Investigator: James J. Hitchcock

Economic Analytic Papers

Investigators: Kenneth Dam, Mortimer Goldstein, Myer Rashish, Nathaniel McKitterick

Reviewers: Theodore Geiger, Willis Armstrong, I. M. Destler, Sidney Weintraub, Bernard Norwood, Robert Burt, Charles Levy

Policy Planning

Principal Investigator: Commission Staff

Other Investigator: Lincoln P. Bloomfield

Reviewers: Robert R. Bowie, Chester L. Cooper, Henry Owen

Confidentiality

Principal Investigator: Commission Staff

Other Investigator: Emily Scheketoff

Ethical Considerations

Principal Investigator: William B. Carter, III (Commission Staff)

Other Investigators: Francis Winters, Donald McHenry, Fred K. Kirchstein

Reviewers: Robert Osgood, Paul Nitze, Charles Runyon, Clyde Ferguson, John Salzberg, Ernest LeFever, Carl Marcy, William O'Brian, Albert Jakira

Advisory Commissions

Principal Investigator: Chester A. Crocker

Posts and Missions

Principal Investigators: Foy D. Kohler, William O. Hall, Robert Schaetzel, Godfrey Harris, T. McAdams Deford

Multilateral Diplomacy

Principal Investigators: Richard Gardner, Harlan Cleveland, Charles W. Yost

Reviewers: Joseph S. Nye, Gerard Mangone, William O. Hall, Samuel DePalma, Nathaniel Peleovits

Improvement of Foreign Service Reporting

Principal Investigators: William D. Coplin and Michael K. O'Leary (Prince Analysis, Inc.)

Other Investigators: Robert F. Rich, Rodger M. Govea, David I. Kapuscinski, Donald J. McMaster, Terry Ann Richmond

Modern Techniques

Principal Investigators: Warren R. Phillips and Richard E. Hayes (CACI, Inc.)

Public Opinion

Principal Investigators: Commission Staff

Reviewers: Edward Korry, Richard Broady, Bernard Cohen, William Watts, Chalmers Roberts, Hon. Jonathan Bingham, Hon. Carol Laise, Hon. William Mailliard, Hon. George McGhee, Murray Marder, Pat Holt, William Bundy, David Cohen, Edward Kerr

Approved For Release 2003/02/27 : CIA-RDP86B00269R000600030001-1

Approved For Release 2003/02/27 : CIA-RDP86B00269R000600030001-1

Resources for Foreign Affairs: Personnel
Principal Investigator: James W. Clark
Other Investigators: William T. McDonald, Richard B. Moon, Peter W. Bridges, Susan Irving, Theodore P. Levino, William Cordier, David S. L. Chu, John P. White, Charles Parker, Jr., Lewis Silverberg, James Mackle, Godfrey Harris, Frederick Bohen, Louis Schwartz, Jr.
Reviewers: L. Dean Brown, Stanley M. Cleveland, William J. Crockett, T. McAdams Deford, Ralph A. Dungan, Roger W. Jones, Frederick C. Mosher, George S. Newman, Alfred Puhan.
Comparable Patterns of Other Governments (Britain, France, Germany)
Principal Investigator: Atlantic Institute for International Affairs, John W. Tuthill, Director General
Other Investigators: William Wallace, Helen S. Wallace, Judith D. Trunzo, Francois Sauzey, Xenia Ryschenkow, James Sattler, Wolfgang Hager, Karl Kaiser, Pierre Uri, Joseph W. Harned.
Resources for Foreign Affairs: Budget
Principal Investigators: Allen Schick, Arnold Nachmanoff
State Department Response to a New Foreign Policy Objective: The Narcotics Control Case
Principal Investigator: Thomas J. Peters

OTHER CONSULTANTS

Graham T. Allison	Edward Fried	Carl Marcy
Fred Bergsten	Hugh Heclo	Richard Moorsteen
Lincoln Bloomfield	Grant Hilliker	Roger Morris
Robert Bowie	Thomas L. Hughes	Michael O'Leary
Emilio Collado	Arnold Kanter	Randall B. Ripley
Richard N. Cooper	Robert Komer	Vincent Rock
William Coplin	Anthony K. Lake	Walter B. Slocombe
I. M. Destler	John Leddy	Carl Stover
Philip Farley	Abrham Lowenthal	James Woolsey
Isaiah Frank	Lawrence Lynn	Peter Zimmerman

ANNEX E

CONTENTS OF APPENDIX VOLUMES I THROUGH VII

VOLUME I

APPENDIX A: FOREIGN POLICY FOR THE FUTURE

1. The Future World Environment: Near-term Problems for U.S. Foreign Policy by PETER L. SZANTON.
2. The International Community in the Next Two Decades by ZBIGNIEW BRZEZINSKI.
3. The Tasks Ahead for U.S. Foreign Policy by ROBERT R. BOWIE.
4. Toward an Open Foreign Policy by McGEORGE BUNDY.

APPENDIX B: THE MANAGEMENT OF GLOBAL ISSUES

Organizing for Global Environmental and Resource Interdependence by J. S. NYE, ROBERT O. KEOHANE, *et al.*

APPENDIX C: MULTILATERAL DIPLOMACY

1. The Management of Multilateralism by HARLAN CLEVELAND.
2. Foreign Policymaking in a New Era—The Challenge of Multilateral Diplomacy by RICHARD N. GARDNER.
3. Conduct of Multilateral Diplomacy by the United States Government by CHARLES W. YOST.

VOLUME II

APPENDIX D: THE USE OF INFORMATION

Towards a More Soundly Based Foreign Policy: Making Better Use of Information by ALEXANDER L. GEORGE, Stanford University, *et al.*

APPENDIX E: FIELD REPORTING

Towards the Improvement of Foreign Service Field Reporting by WILLIAM D. COPLIN, MICHAEL K. O'LEARY, ROBERT F. RICH, *et al.*, Prince Analysis, Inc.

APPENDIX F: POLICY PLANNING

1. Organizing for Policy Planning by LINCOLN P. BLOOMFIELD.
2. Commentaries by ROBERT R. BOWIE, CHESTER L. COOPER, and HENRY OWEN.

APPENDIX G: ANALYTIC TECHNIQUES FOR FOREIGN AFFAIRS

Utilization of Computer Technology and Formal Social Science in Foreign Policy Decision-making by WARREN R. PHILLIPS and RICHARD E. HAYES, CACI, Inc.

Approved For Release 2003/02/27 : CIA-RDP86B00269R000600030001-1

Approved For Release 2003/02/27 : CIA-RDP86B00269R000600030001-1

Volume III

APPENDIX H: CASE STUDIES ON U.S. FOREIGN ECONOMIC POLICY: 1965–74

Cases on a Decade of U.S. Foreign Economic Policy: 1965–74 by Edward K. Hamilton *et al.*, Griffenhagen-Kroeger, Inc.

APPENDIX I: CONDUCT OF ROUTINE RELATIONS

The Making of U.S. Policies Toward Latin America: The Conduct of 'Routine' Relations by Abraham F. Lowenthal *et al.*

APPENDIX J: FOREIGN ECONOMIC POLICY

1. Economic Intelligence and Analysis by Kenneth W. Dam.
2. Personnel for U.S. Economic Activities Overseas by Mortimer D. Goldstein.
3. The Personnel System for the Conduct of Foreign Economic Policy by Sidney Weintraub.
4. A Critical Appraisal of U.S. International Economic Policy Coordination by Stephen D. Cohen.

Volume IV

APPENDIX K: ADEQUACY OF CURRENT ORGANIZATION: DEFENSE AND ARMS CONTROL

Findings, Recommendations and Case Studies on the Adequacy of Current Organization: Defense and Arms Control, by Graham T. Allison, *et al.*

Volume V

APPENDIX L: CONGRESS AND EXECUTIVE-LEGISLATIVE RELATIONS

1. The Constitution and Foreign Policy
   a. "A More Effective System" for Foreign Relations: The Constitutional Framework, by Louis Henkin.
   b. Comments by Gerhard Casper, Thomas Ehrlich, Eugene Rostow, and Richard A. Falk.
2. Congressional Organization
   a. Foreign Policy Aspects of the House Select Commission on Commissions by Representative Richard Bolling.
   b. The Role of the President in Foreign Policy by Arthur Schlesinger, Jr.
3. Congressional Leadership
   a. Congressional Leadership and Foreign Policy by Senator Mike Mansfield.
   b. Congressional Party Leadership and the Impact of Congress on Foreign Policy by Randall B. Ripley.
4. Foreign Economic Policymaking by Senator James B. Pearson.
5. Congress and Foreign Policy by Senator J. W. Fulbright.
6. Problems in the Conduct of Foreign Policy
   a. Public Participation in the Foreign Policy Process by Richard A. Frank.
   b. Foreign Policy Information by Stanley N. Futterman.
   c. Executive Privilege in the Conduct of Foreign Policy by Rita A. Hauser.
   d. The Power to Make War by W. Taylor Reveley III.

APPENDIX M: CONGRESSIONAL SURVEY

Report of a Staff Survey of Congressional Views on the Organization of Government Conduct of Foreign Policy by R. Roger Majak.

APPENDIX N: CONGRESS AND NATIONAL SECURITY

1. Congress and National Security: A Look at Some Issues by Representative Clement J. Zablocki.
2. Foreign Policy and Unnecessary Nuclear Secrecy—the Need for More Coordination Among the Committees Involved by Senator Stuart Symington.
3. Department of Defense Response to Senator Mike Mansfield: Information for Consideration by the Commission. . . .

Volume VI

APPENDIX O: MAKING ORGANIZATIONAL CHANGE EFFECTIVE: CASE STUDIES

Making Organizational Change Effective: Case Analysis of Attempted Reforms in Foreign Affairs by staff and consultants of the National Academy of Public Administration.

APPENDIX P: PERSONNEL FOR FOREIGN AFFAIRS

1. Foreign Affairs Personnel Management by James W. Clark.
2. The Foregin Service Personnel System by R. Bartlett Moon.
3. Developing the Military Executive by David S. C. Chu and John P. White.
4. Executive Manpower Systems and Overseas Assignment Practices in Multinational Corporations by Theodore P. Levino and William K. Cordier.
5. Organization for Presidential Personnel Management Responsibilities with Particular Reference to Foreign Affairs Personnel by Charles Parker.

APPENDIX Q: POSTS AND MISSIONS

1. The Role of the Ambassador by Foy D. Kohler.
2. Is the Ambassador an Endangered Species, or Merely Obsolete? by J. Robert Schaetzel.
3. The Organization and Management of United States Overseas Missions—Issues and Options by William O. Hall.
4. Overseas Posts and Missions by T. McAdams Deford.

APPENDIX R: COMPARATIVE FOREIGN PRACTICES

Problems in the Organization of United States Foreign Policy: Comparative Foreign Practices," by staff and consultants of the Atlantic Institute for International Affairs.

APPENDIX S: ADVISORY PANELS

The President's External Advisors in Foreign Policy by Chester A. Crocker.

Approved For Release 2003/02/27 : CIA-RDP86B00269R000600030001-1

Approved For Release 2003/02/27 : CIA-RDP86B00269R000600030001-1

APPENDIX T: BUDGETING AND FOREIGN AFFAIRS COORDINATION

1. Budgeting, Programming, and Foreign Policy by ARNOLD NACHMANOFF.
2. Congressional Uses of its Many Powers to Control Foreign Policy by ALLEN SCHICK.

VOLUME VII

APPENDIX U: INTELLIGENCE FUNCTIONS ANALYSES

1. Intelligence Functions by WILLIAM J. BARNDS.
2. Intelligence and Policymaking in an Institutional Context by WILLIAM J. BARNDS.
3. Comments on Barnds' papers by JOHN W. HUIZENGA, LAWRENCE E. LYNN, JR. and HARRY HOWE RANSOM.
4. Issues on Intelligence Resource Management by ROBERT M. MACY.
5. Clandestine Operations by TAYLOR G. BELCHER.
6. Intelligence Support for Foreign Policy in the Future by RUSSELL JACK SMITH.
7. Congress and American Secret Intelligence Agencies by HARRY HOWE RANSOM.
8. Intelligence, Covert Operations, and Foreign Policy by PAUL W. BLACKSTOCK.

APPENDIX V: COORDINATION IN COMPLEX SETTINGS

The Coordination of Complexity in South Asia by LLOYD I. RUDOLPH, SUSANNE HOEBER RUDOLPH, University of Chicago, *et al.*

APPENDIX W: ETHICAL CONSIDERATIONS: FOREIGN POLICY

1. Ethical Considerations and Foreign Policy by DONALD F. MCHENRY, with the assistance of FRED K. KIRSCHSTEIN.
2. Ethical Considerations and National Security Policy by FRANCIS X. WINTERS, S.J.

APPENDIX X: THREE INTRODUCTORY RESEARCH GUIDELINES

1. The Commission's Studies Program by PETER L. SZANTON.
2. Alternative Organizational Models for the Conduct of Foreign Policy by WILLIAM I. BACCHUS and R. ROGER MAJAK.
3. Problems in the Conduct of United States Foreign Policy: A Compilation of Recent Critiques by J. DANIEL O'FLAHERTY.

U. S. GOVERNMENT PRINTING OFFICE : 1975 O - 579-209

Approved For Release 2003/02/27