Sanitized Copy Approved for Release 2011/08/22 : CIA-RDP89B00487R000300650003-9

THE PERKIN-ELMER CORP. IPIEC ENGINEERING REPORT

ENGINEERING REPORT NO. 399

TITLE: Preliminary Discription of a Sighting and Memory System

COPY NO. 2 DATE: 5/13/55

PREPARED FOR: Projector Project - SPO 24390

[redacted] STAT

PROJECT ENGINEER

[redacted] STAT

DIRECTOR OF ENGINEERING

NUMBER OF PAGES 48

Sanitized Copy Approved for Release 2011/08/22 : CIA-RDP89B00487R000300650003-9

Sanitized Copy Approved for Release 2011/08/22 : CIA-RDP89B00487R000300650003-9

TABLE OF CONTENTS

SECTION		PAGE
I	Introduction	1
II	Description of the Coordinates	2
III	Triangle Solver and Tracking Mechanism	7
IV	The Timing Method	12
V	The Periscope Drive Mechanism	14
VI	Introducing the Hand Control Function	21
VII	Characteristic Rotation of the Periscope Field	26
VIII	The Drift Problem	28
IX	The Digital Memory Unit	34
X	The Coding Method	39
XI	Conversion From Stored Code to Shaft Rotations	44
XII	Conclusion	47

Sanitized Copy Approved for Release 2011/08/22 : CIA-RDP89B00487R000300650003-9

Sanitized Copy Approved for Release 2011/08/22 : CIA-RDP89B00487R000300650003-9

PRELIMINARY DESCRIPTION OF A SIGHTING AND MEMORY SYSTEM

I INTRODUCTION

The material contained in this report describes the basic methods that have been proposed for use in a periscopic sight and memory device. The detailed requirements for which this system is to be put to use are given in Projector Division Technical Specifications No. 6, dated February 18, 1955, and No. 7, dated February 28, 1955. A brief summary of these requirements are as follows:

A. Various objects which pass near an observer are to be sighted with the aid of an optical periscope containing a set of cross hairs.

B. Provision must be made for the observer to track one of the objects for a short time so as to acquire certain information on the relative velocity of object and observer.

C. Certain groups of objects move with the same velocity relative to the observer and hence the measurement of velocity is usually performed on only one object in a group.

D. As each object is sighted in a group whose velocity is already known, it must be possible to store information on the present position of that object in order that the time of its arrival at some predetermined future position may be automatically computed.

E. As the time is approached when each object will arrive at its predetermined position, certain angular data relative to this position is to be generated and an electrical impulse is to be created that will designate the instant of arrival.

F. The equipment for this system must be extremely light weight and use as little electrical power as possible.

Sanitized Copy Approved for Release 2011/08/22 : CIA-RDP89B00487R000300650003-9

Sanitized Copy Approved for Release 2011/08/22 : CIA-RDP89B00487R000300650003-9

A block schematic of the proposed system is illustrated in Figure 1. This schematic is merely illustrative of the basic functions in the system and does not necessarily designate the different packages of which the system is composed. Ordinarily, control of the periscope sight line is introduced by the observer to a hand control unit. This is a joy stick type of input and is related to the movement of the cross hairs in such a way that the observer moves the joy stick in the direction it is wished the cross hairs to move. When measuring the velocity of an object being sighted, the observer must also make adjustment of the drift and velocity inputs until satisfactory tracking is obtained. The tracking unit creates the relationship between hand control and velocity inputs and the outputs needed to drive the periscope and the storage unit. The storage unit will only preserve data when it receives a storage instruction input from the observer. This will be a simple push-button operation. The digital convertor mechanism is necessary to provide the desired output from the storage unit.

II DESCRIPTION OF THE COORDINATES

For the problem imposed on the sighting and memory system it is convenient to recognize a set of mutually perpendicular coordinate axes, X_o, Y_o, and Z_o, with origin at the observer. The position of an object sighted by the observer may be stated relative to the observer in terms of three distance values, x, y, and z, measured along the axes just described. This is illustrated in Figure 2. The angle β is defined as the angle between the Z_o axis and the projection of the object sight line onto the Z_oY_o plane. The angle β is further defined by the relationship:

$$\tan \beta = y/z \qquad (1)$$

Sanitized Copy Approved for Release 2011/08/22 : CIA-RDP89B00487R000300650003-9

Sanitized Copy Approved for Release 2011/08/22 : CIA-RDP89B00487R000300650003-9

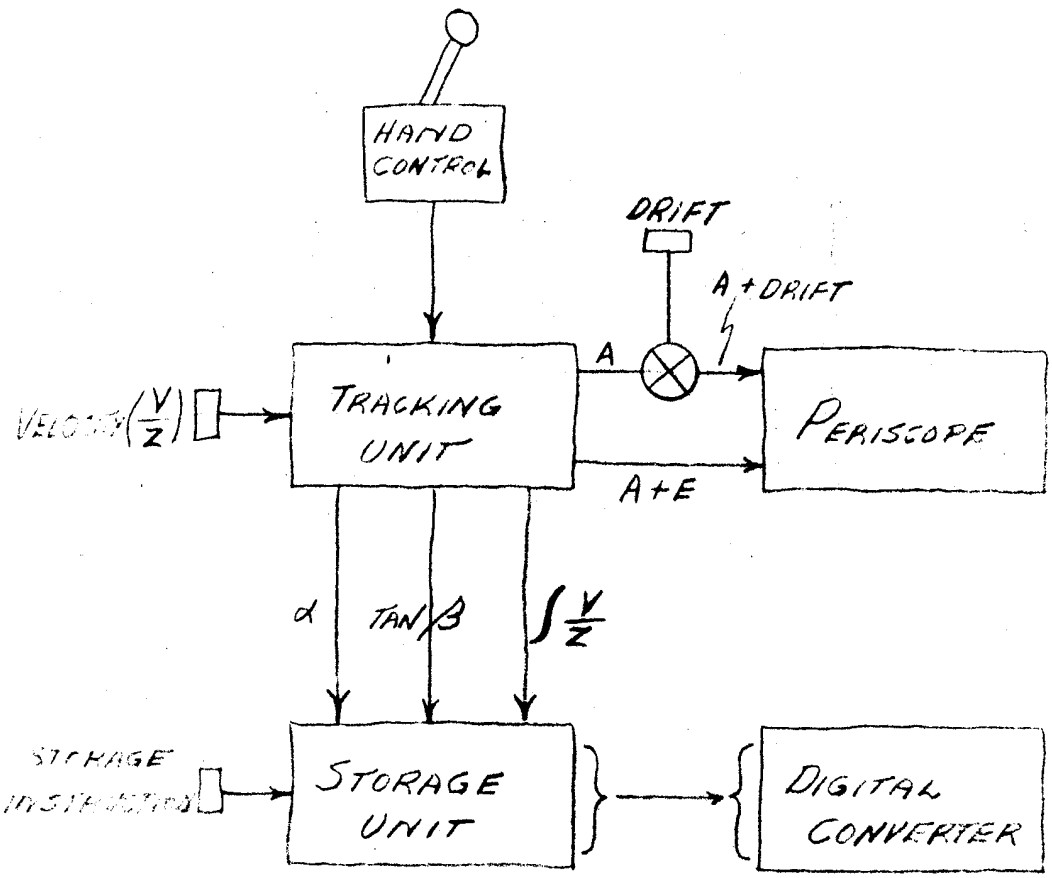

FIG. 1 BLOCK SCHEMATIC OF SIGHTING AND MEMORY SYSTEM.

Sanitized Copy Approved for Release 2011/08/22 : CIA-RDP89B00487R000300650003-9

Sanitized Copy Approved for Release 2011/08/22 : CIA-RDP89B00487R000300650003-9

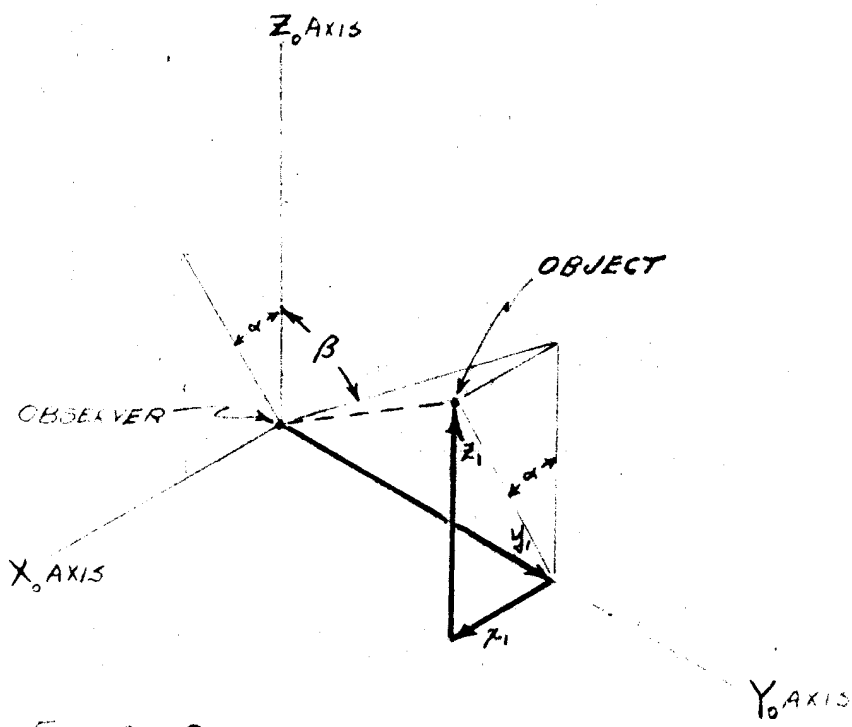

FIG. 2. OBSERVER'S COORDINATE SYSTEM

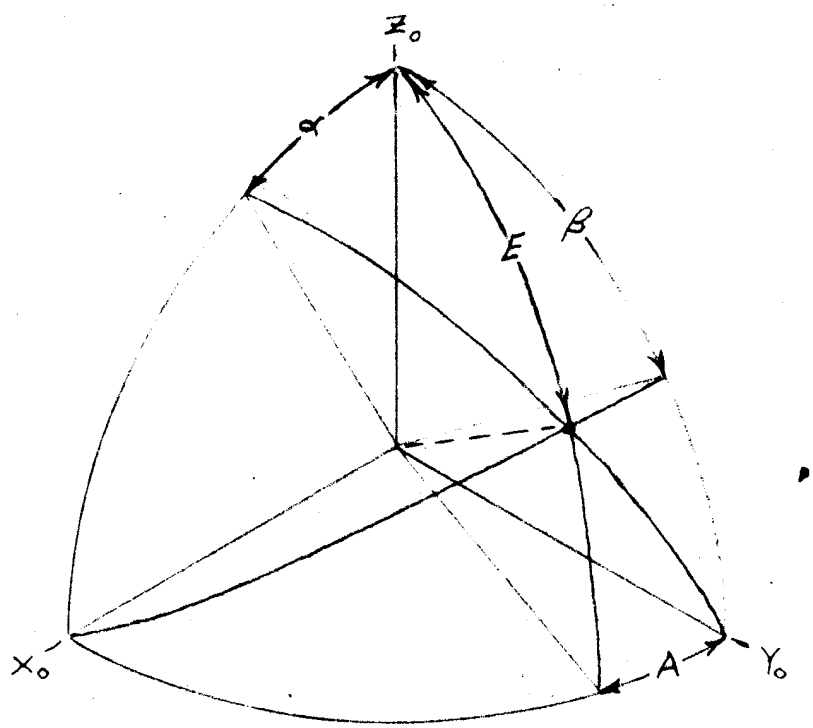

FIG. 3 ANGLE RELATIONSHIP IN THE SIGHTING AND MEMORY SYSTEM

Sanitized Copy Approved for Release 2011/08/22 : CIA-RDP89B00487R000300650003-9

FE3

Sanitized Copy Approved for Release 2011/08/22 : CIA-RDP89B00487R000300650003-9

Another angle α is defined as that angle between the Z_0 axis and the projection of the object sight line onto the Z_0X_0 plane. The angle is also defined by the relationship: $\tan \alpha = x/z$ (2)

The motion of objects in this problem are characterized by the following conditions:

For all objects which are members of the same group and in the absence of so-called drift,

$$\frac{dx}{dt} = 0 \tag{3}$$

$$\frac{dy}{dt} = \text{constant } (V) \tag{4}$$

$$\frac{dz}{dt} = 0 \tag{5}$$

$$z = \text{constant} \tag{6}$$

In the presence of drift, the conditions stated by Equations (3) and (4) are replaced by:

$$\frac{dx}{dt} = V \sin \theta \tag{7}$$

$$\frac{dy}{dt} = V \cos \theta \tag{8}$$

where the angle θ is defined as the drift angle. Further discussion of the drift angle will be postponed, however, for a later section of this report.

Two other angles must now be defined since the angles of motion of the scanning mechanism on the periscope do not necessarily coincide with

Sanitized Copy Approved for Release 2011/08/22 : CIA-RDP89B00487R000300650003-9

Sanitized Copy Approved for Release 2011/08/22 : CIA-RDP89B00487R000300650003-9

the angles α and β, already defined. An inherent characteristic of any simple two-axis scanning mechanism is that the secondary axis rotates about the primary axis. Since the angles α and β are measured about axes both of which remain fixed, any optical scanning mechanism which could use these angles as inputs would be considerably more complex than the usual type of mechanism. Because of other problems associated with an optical scanning mechanism it is usually desired to use the simplest axis configuration that is possible. While it is true that it would have been possible to retain one of the angles, α or β, as the primary rotation angle of the optical scanner assembly, it has been decided preferable to make the primary or polar axis of the periscope scanning head lie along the Z_o axis. One reason for selecting the Z_o axis as the primary axis of the periscope is, as will be discussed later, that the drift correction may be handled as a simple differential adjustment to the angle A. Were it not for this fact, it may possibly have been preferable to select the X_o axis as the primary axis for the periscope, since this would employ the angle β as one of the inputs to the periscope. Thus, the periscope input angles are as illustrated in Figure 3. Angle A is measured about the Z_o axis and is the primary or polar angle of the periscope. The angle E is measured about an axis which is at right angles to the Z_o axis, but is rotated through the angle A just defined.

The purpose in retaining recognition of all four angles illustrated in Figure 3 is that the angles α and β are inherently needed in the solution of the tracking and memory problem, whereas the angles A, and E are needed to drive the periscope. The basis for this statement will be more clearly understood as the discussion progresses.

Sanitized Copy Approved for Release 2011/08/22 : CIA-RDP89B00487R000300650003-9

Sanitized Copy Approved for Release 2011/08/22 : CIA-RDP89B00487R000300650003-9

III TRIANGLE SOLVER AND TRACKING MECHANISM

The tracking problem which is encountered by the sighting and memory system involves the tracking of objects whose velocity measured in rectangular coordinates is considered to be constant during the tracking interval. Since the tracking periscope must be driven in angular coordinates, the simplest form of tracking device will involve the use of a coordinate transformer mechanism for relating one type of coordinate to the other. By including the use of such a coordinate transformation, it then suffices to generate a constant rate of change in the rectangular coordinate portion of the tracking mechanism whereupon the needed variations in angular coordinate data will be produced.

One such coordinate transformer mechanism is the simple triangle solver illustrated schematically in Figure 4. This is a mechanical device whose behavior is analogous to a portion of the sighting problem. It contains two sliding members, one of whose displacement represents the variable z occurring at right angles to the displacement of the other sliding member representing the variable y. The z slide possesses a pivot which supports a member representing the projection of the line of sight in the X_pY_p plane. The other end of the member is a yoke straddling a pivot on the y side. By making the displacement of the y and z pivots proportional to the y and z components of the sight line, the angle β is then created by the angular displacement of the sight line member about the z pivot. Rotation about the z pivot may then be used to generate the necessary periscope drive. The reader is asked to neglect for the moment the question as to how the β angle so generated could be transmitted to the periscope scanning mechanism.

In order to create the proper variation in the angle β, it is only

Sanitized Copy Approved for Release 2011/08/22 : CIA-RDP89B00487R000300650003-9

Sanitized Copy Approved for Release 2011/08/22 : CIA-RDP89B00487R000300650003-9

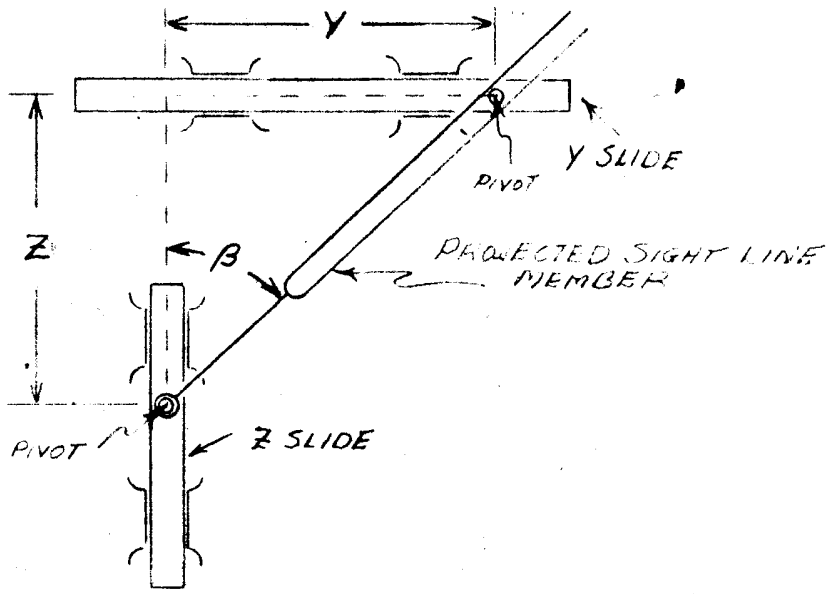

FIG 4 TRIANGLE SOLVER

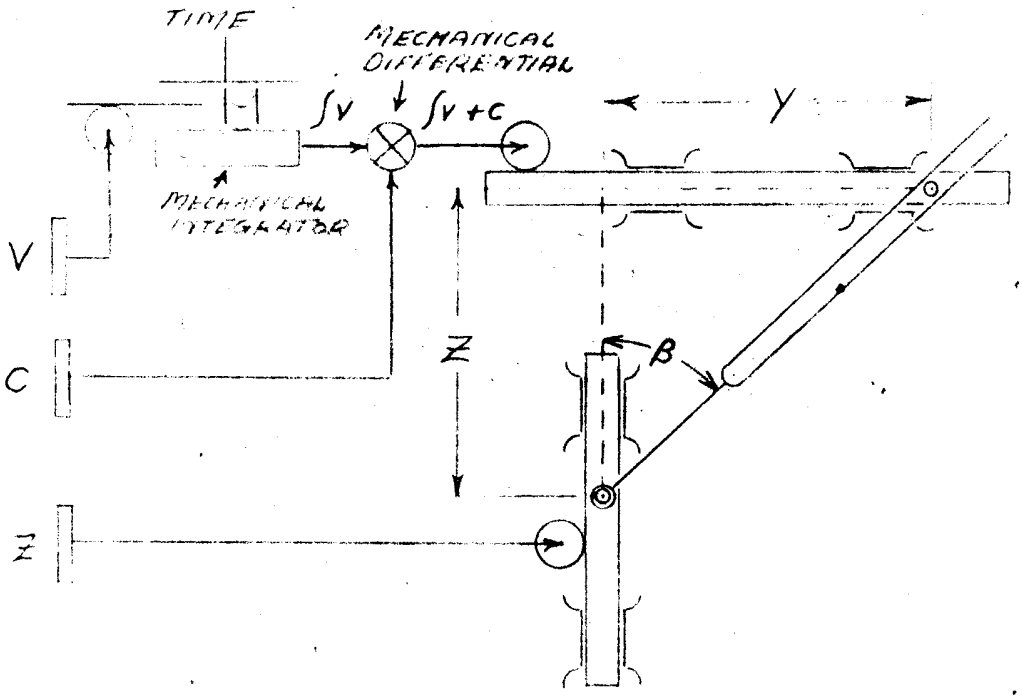

FIG 5 RATE DRIVE FOR TRIANGLE SOLVER

Sanitized Copy Approved for Release 2011/08/22 : CIA-RDP89B00487R000300650003-9

Sanitized Copy Approved for Release 2011/08/22 : CIA-RDP89B00487R000300650003-9

necessary to displace the y slide at a constant rate. The rate of change of y is only considered to be constant, however, during any one tracking interval. Hence, a provision must be made for changing the rate of displacement of the y slide from time to time as groups of objects having a different velocity are encountered. Similarly, it must be possible to introduce additive corrections to the y coordinate corresponding to the action of shifting the sight line from one object to another. The value of x may also be considered constant during any one tracking interval, but it would, of course, be necessary to change this value also from time to time.

A suitable mechanism which will provide these functions involves the use of a mechanical integrator driven by a constant speed motor. This is illustrated schematically in Figure 5. The constant speed motor input to the integrator possesses the dimension of time and the other input possesses the dimension of velocity ($\overline{V}$) which is brought out as one of the manual adjustments. The output of the integrator is in reality the time integral of V and, in the case of a mechanical device such as it being illustrated, consists of a shaft rotation whose rotation rate is proportional to V. The integrator output is introduced to a mechanical differential whose other input (labeled C) is also brought out as a manual adjustment. This input enables the observer to make additive corrections to the output of the integrator since the mechanical differential acts merely as a device for summing shaft rotations. The output of the differential then passes to a pinion engaged in a rack which is part of the y slide. Through the V and C inputs the observer may then adjust both the displacement and rate of change of displacement of the y slide. A third manual adjustment is connected to a pinion driving the x slide

Sanitized Copy Approved for Release 2011/08/22 : CIA-RDP89B00487R000300650003-9

Sanitized Copy Approved for Release 2011/08/22 : CIA-RDP89B00487R000300650003-9

which makes it possible to adjust this variable. Assuming an appropriate value for z, an adjustment of the V and C inputs that will cause the sight line to appropriately track an object not only achieves the desired tracking, but also measures and stores the velocity V at the input to the integrator. To track any other object having the same coordinate z and moving with the same velocity V, it would then only be necessary to readjust the value C by an amount necessary to move the sight line to the new object. The foregoing, of course, pertains only to that component of the tracking problem projected in the Y_oZ_o plane.

An important simplification in the mechanism just described is possible. Suppose that all of the dimensions of the mechanism shown in Figure 5 are considered to be continuously divided through by the quantity z. Under such a condition, the position of the z slide becomes fixed for all time and the displacement of the y slide becomes proportional to the quantity (y/z). This is illustrated in Figure 6. With appropriate scale factors the displacement of the y slide is simply the quantity tan β. It may immediately be realized that the rate of change of this quantity appearing at the input of the integrator is now V/z. Thus, one of the important advantages of this simplification is that two of the input quantities (V and z) now occur as a ratio which may be adjusted by a single control. A further advantage in the construction of a real mechanism occurs by having fixed the position of the z pivot since the rotation about this point must be transmitted to another device. The mechanism now described has been widely used for tracking purposes, one of the most pertinent examples being in the M series Norden Bomb Sight.

Having chosen the simplified tracking mechanism the possibility is, of course, prevented of observing either V or Z as independent

Sanitized Copy Approved for Release 2011/08/22 : CIA-RDP89B00487R000300650003-9

Sanitized Copy Approved for Release 2011/08/22 : CIA-RDP89B00487R000300650003-9

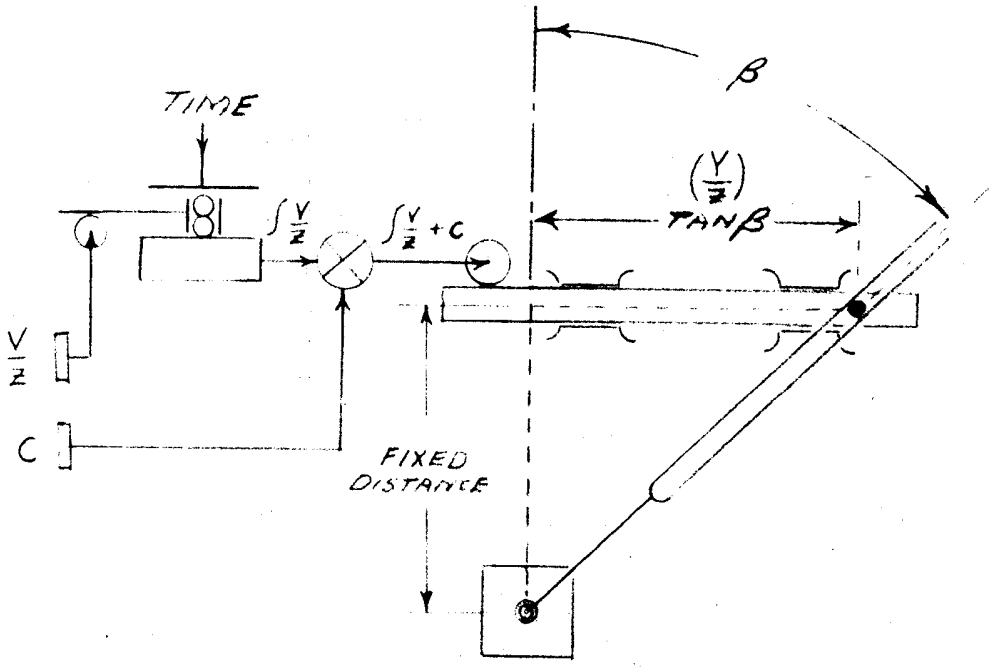

FIG 6 SIMPLIFIED RATE DRIVE MECHANISM

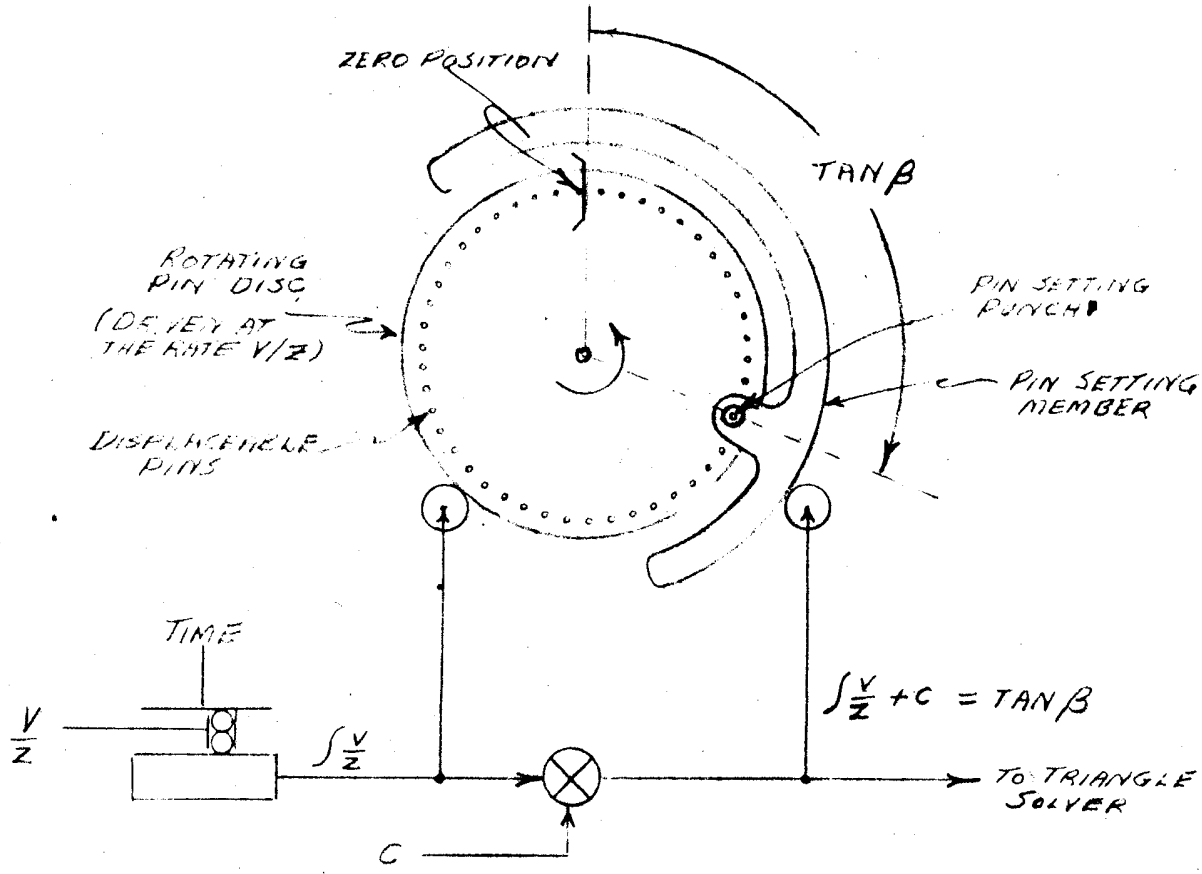

FIG. 7 THE TIMING MECHANISM

Sanitized Copy Approved for Release 2011/08/22 : CIA-RDP89B00487R000300650003-9

Sanitized Copy Approved for Release 2011/08/22 : CIA-RDP89B00487R000300650003-9

quantities. This is understood to be of no consequence in the present problem, however, since the ratio of these quantities is constant during any tracking interval and since it has also been stated that there is no requirement to have the mechanism measure these quantities independently.

IV THE TIMING METHOD

It has already been stated that one of the requirements for the sighting and memory system is that it be possible to store information on the position of an object that has been tracked and to signal the time at which such an object crosses a predetermined position. This predetermined position is the same for all objects and is the Z_oX_o plane; in other words, where the value of the coordinate y reaches zero. Now the time it will take an object to move from some position where its coordinate is y_1 to a position where y = zero is simply y_1/V, since V is assumed to be constant. Therefore the time at which such an object would cross the Z_oX_o plane is given by the expression:

$$t = t_1 + \frac{y_1}{V} \qquad (9)$$

where t_1 is the time at which the object possessed the coordinate value y_1. Now to mechanize the operations indicated by this expression would prove cumbersome. Notice, however, that by multiplying equation (9) by the quantity V/z and by rearranging, the expression is obtained:

$$\frac{y_1}{z} - \frac{V}{z}(t - t_1) = 0 \qquad (10)$$

Furthermore, by remembering that V/Z is constant during the tracking interval, and by replacing y_1/z by $\tan \beta_1$, the previous expression may be seen to equal:

Sanitized Copy Approved for Release 2011/08/22 : CIA-RDP89B00487R000300650003-9

Sanitized Copy Approved for Release 2011/08/22 : CIA-RDP89B00487R000300650003-9

$$\tan \beta_1 - \int_{t_1}^{t} \frac{V}{z} = 0 \qquad (11)$$

The two terms in this expression may be recognized as quantities created by the simplified rate drive mechanism illustrated in Figure 6 of the previous section. All that is needed then, to perform the timing computation is a means for recording a particular value of tan β and subtracting from that the integral of V/z taken from that time until the time when the difference of tan β and the integral of V/z is equal to zero. A convenient mechanism that will perform this function is illustrated in Figure 7. A disc containing a large number of axially displaceable pins around its periphery and a second member containing a punch in alignment with the pins just mentioned are mounted to rotate concentrically about a common shaft. The pin setting member is driven by a connection to the tan β drive of the rate mechanism such that the angular displacement in a clockwise direction of the pin setting punch from some zero position is proportional to the instantaneous value of tan β. The pin disc is driven by connection to the output of the integrator in the rate mechanism and is driven continuously in a counterclockwise direction at a rate proportional to V/z. Now, if at the time it is wished to begin the timing operation for a particular object, the pin setting punch is depressed so as to displace the pin directly underneath in the pin disc, then the distance this displaced pin will have to travel in order to reach the zero position will be proportional to the value of tan β which existed at the time it was displaced. Furthermore, this pin will travel toward the zero position at the rate V/z and therefore just as it reaches the zero position the conditions of equation (11) will be satisfied. The

Sanitized Copy Approved for Release 2011/08/22 : CIA-RDP89B00487R000300650003-9

Sanitized Copy Approved for Release 2011/08/22 : CIA-RDP89B00487R000300650003-9

displaced pin could therefore actuate a switch which would create the desired timing signal after which the displaced pin may be returned to its original position in readiness for another pin setting operation.

It should be clear from the explanation of the timing mechanism that it is not necessary to await the arrival of one displaced pin to the zero position before being able to displace another. One of the detailed requirements of the sighting and memory system is that it be able to possess as many as 6 such pieces of stored data at any one time. There, of course, have to be many more than this number of pins in the pin disc since the timing uncertainty is inversely proportional to the number of pins. Fortunately, it is possible to achieve the necessary timing accuracy with a very moderate number of pins. Certain other features of the timing mechanism will be illustrated in a later section.

V THE PERISCOPE DRIVE MECHANISM

In the previous sections the method for generating the tracking function was explained and it was realized that the timing operation was derived through the use of a function of the angle β. All of these considerations involved that portion of the tracking problem which is projected in the Z_0Y_0 plane. All objects that are to be tracked, however, will not lie in this plane, whereupon it becomes necessary to accommodate the X_0 coordinate of object position.

Under the conditions that were stated for object motion it will be remembered that in the case of zero drift the rate of change of the X_0 coordinate for any object is zero. The X_0 coordinate is expected to be different, however, from object to object. Remembering the definition for the angle α that was stated in equation (2) and remembering also

Sanitized Copy Approved for Release 2011/08/22 : CIA-RDP89B00487R000300650003-9

Sanitized Copy Approved for Release 2011/08/22 : CIA-RDP89B00487R000300650003-9

that the coordinate s holds a constant value during the tracking interval, the conditions of motion for an object may be restated by saying that the angle α is constant during the tracking interval. Numerous methods could be employed to insure the condition that motion of the periscope line of sight will occur with α constant without actually having a measure of this quantity. However, as a part of the memory operation it is desired to know the value of α for any object as it passes through the Z_oX_o plane. Thus, it becomes necessary that somewhere in the sighting and memory system a physical quantity such as a shaft rotation be generated which is proportional to this angle. The manner in which the angle α associated with a given object is stored and later generated as an output when that object passes the Z_oX_o plane will be discussed in a later section.

What is needed then is a mechanism that will create the angle relationship illustrated previously in Figure 3. Such a mechanism may be created through the use of gimbal devices which form a mechanical analogy of the problem. Such a mechanism is illustrated in Figure 8. A rod supported in what resembles a universal joint, represents the line of sight and passes through two yokes, one of which pivots about the β axis and the other about the α axis. By positioning the two yokes in proportion to the angles α and β the corresponding angles A and E are generated at the pivots supporting the line of sight member. Thus, if the yoke driven in β were connected to the β output of the tracking mechanism described previously, the appropriate rotation angles or the periscope (A and E) would be generated.

A possible variation of the angle converter is noteworthy. This variation arises from the fact that nowhere in the system is the angle β required to be measured explicitly. Thus, as illustrated in Figure 9, the yoke that was formerly visualized to rotate about the β axis could be replaced by a yoke attached to a sliding member such that the motion of this yoke describes a plane that is perpendicular to the axis about which

Sanitized Copy Approved for Release 2011/08/22 : CIA-RDP89B00487R000300650003-9

Sanitized Copy Approved for Release 2011/08/22 : CIA-RDP89B00487R000300650003-9

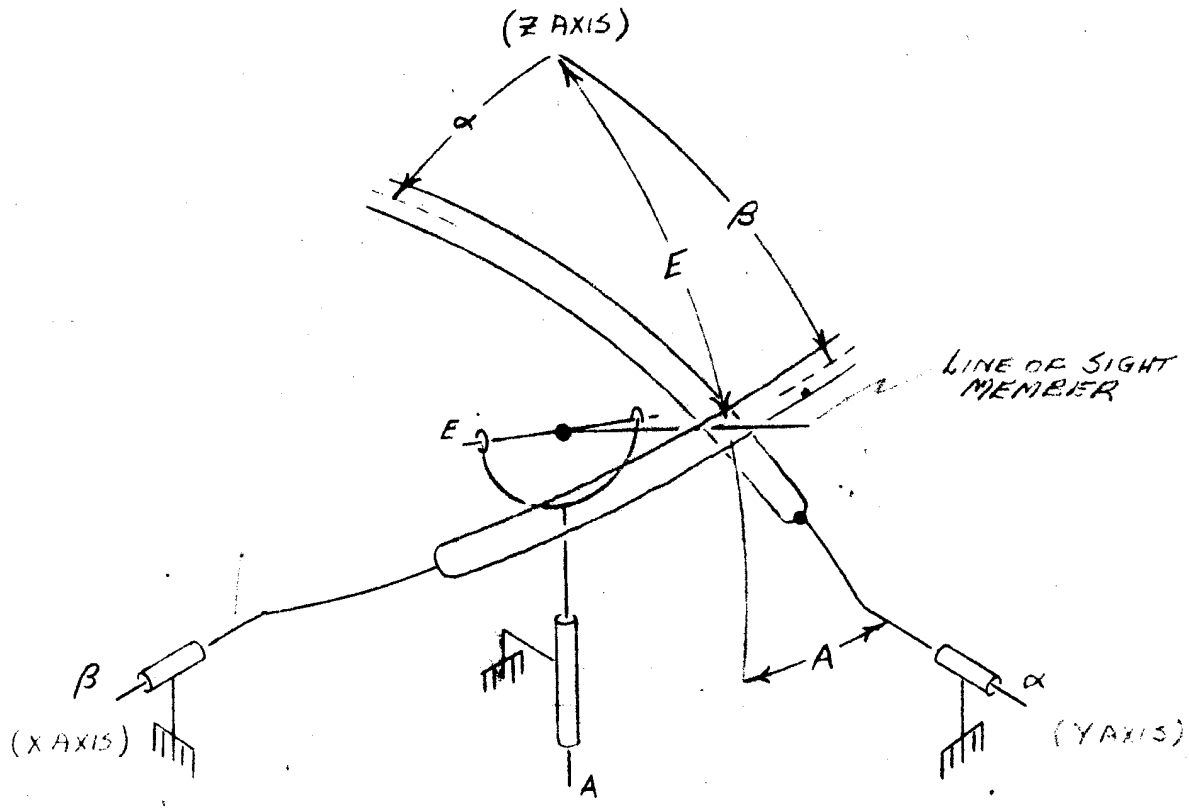

FIG. 8 ANGLE CONVERTER

Sanitized Copy Approved for Release 2011/08/22 : CIA-RDP89B00487R000300650003-9

Sanitized Copy Approved for Release 2011/08/22 : CIA-RDP89B00487R000300650003-9

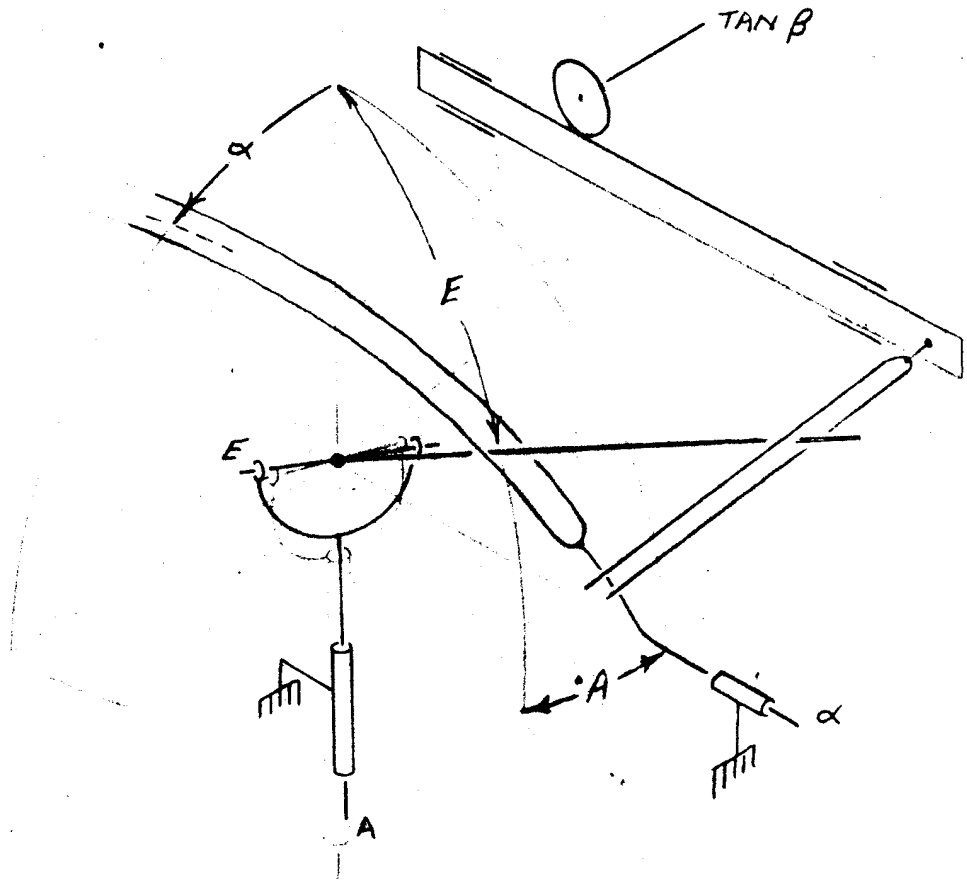

FIG. 9 VARIATION OF ANGLE CONVERTER

Sanitized Copy Approved for Release 2011/08/22 : CIA-RDP89B00487R000300650003-9

Sanitized Copy Approved for Release 2011/08/22 : CIA-RDP89B00487R000300650003-9

the angle A is measured. It should then be clear that the displacement of this yoke would be proportional to the tangent of β and hence would replace the triangle solver mechanism discussed previously. Under these circumstances, the angle converter and triangle solver would be combined in such a way that the angle β never appears explicitly.

Consider now the problem of bringing the angles A and E out of the angle converter. The simplest arrangement would be as illustrated in Figure 10 where a bevel gear mounted on the axel turned through the angle E is meshed with a second bevel gear supported by a shaft that is concentric with the A axis. It may be realized on inspection that the rotation of this latter shaft will be not in the angle E alone, but the angle A + E. If, for some reason, it were desired to obtain a shaft rotation proportional to E alone, it would be a straightforward procedure to subtract the rotation due to A by the use of a mechanical differential. In this instance, however, the simplest arrangement for driving the periscope scanning prism requires that one of the inputs be the angle A + E and hence, the need for a mechanical differential which will create the angle E alone does not exist. This may be appreciated by referring to the illustration of the periscope scanning head shown in Figure 11. In such an arrangement the axis of the objective lens assembly is parallel to the Z_0 axis of the coordinate system and a housing which is concentric with the objective lens assembly rotates about the Z_0 axis by an amount proportional to the angle A. This housing supports the elevation axis (about which the angle E is measured) and this axis supports some form of scanning prism which serves the purpose of deflecting the line of sight away from the Z_0 axis by an amount proportional to the angle E. The elevation drive to the scanning prism must be transmitted through an idler

Sanitized Copy Approved for Release 2011/08/22 : CIA-RDP89B00487R000300650003-9

Sanitized Copy Approved for Release 2011/08/22 : CIA-RDP89B00487R000300650003-9

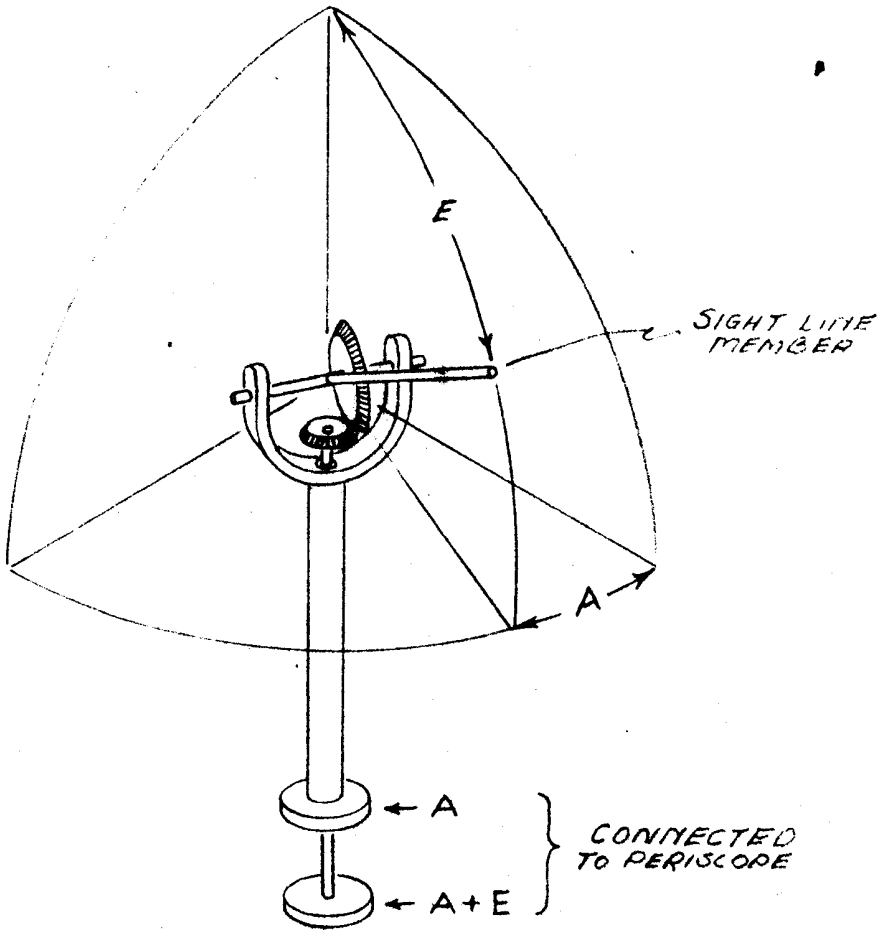

FIG. 10 ANGLE CONVERTER OUTPUT GEARING

Sanitized Copy Approved for Release 2011/08/22 : CIA-RDP89B00487R000300650003-9

Sanitized Copy Approved for Release 2011/08/22 : CIA-RDP89B00487R000300650003-9

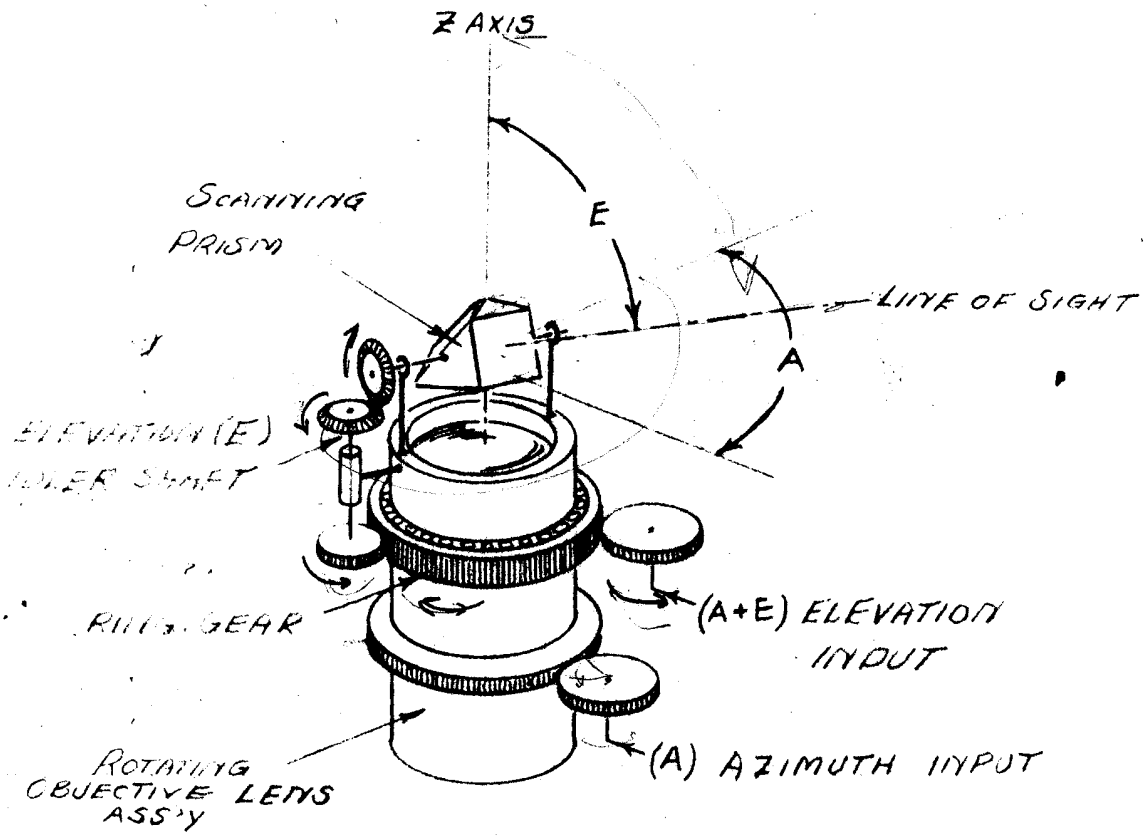

FIG. 11 · TYPICAL SCANNING HEAD

Sanitized Copy Approved for Release 2011/08/22 : CIA-RDP89B00487R000300650003-9

Sanitized Copy Approved for Release 2011/08/22 : CIA-RDP89B00487R000300650003-9

shaft which also rotates with the housing through the angle A. The ring gear, mounted on bearings so that it may rotate with respect to the housing, forms the connection between the idler shaft and the elevation input gear. Thus, it may be seen that the correct elevation input is the angle A + E which is conveniently derived in the angle converter without the use of differentials. The azimuth input to the scanning head simply rotates the entire assembly about the Z_o axis.

Because of image rotation considerations the scanning prism of the sighting and memory system periscope is required to be of the type in which a double reflection occurs. While it is not included in the purpose of this report to discuss the detailed optical considerations associated with the scanning prism, it is worthwhile to point out that the double reflection principle as implied here will prevent an undesirable rotation of the image, as seen by the observer. Such image rotation is undesired for it affects the sense of the observer's control motion over the line of sight. The appearances of images seen through the periscope will be illustrated more fully in a later section.

VI INTRODUCING THE HAND CONTROL FUNCTION

The previous sections have described the method for generating the tracking function and for converting to the necessary periscope drive angles. By combining these mechanisms, a system arrangement might then be obtained as illustrated in Figure 12. In this arrangement, the observer would exercise control over the position of the line of sight primarily by adjustment of the two control shafts labeled C and α. The input C, it will be recalled, is an additive correction to the output of the integrator and thus serves to move the line of sight back and forth in the direction

Sanitized Copy Approved for Release 2011/08/22 : CIA-RDP89B00487R000300650003-9

Sanitized Copy Approved for Release 2011/08/22 : CIA-RDP89B00487R000300650003-9

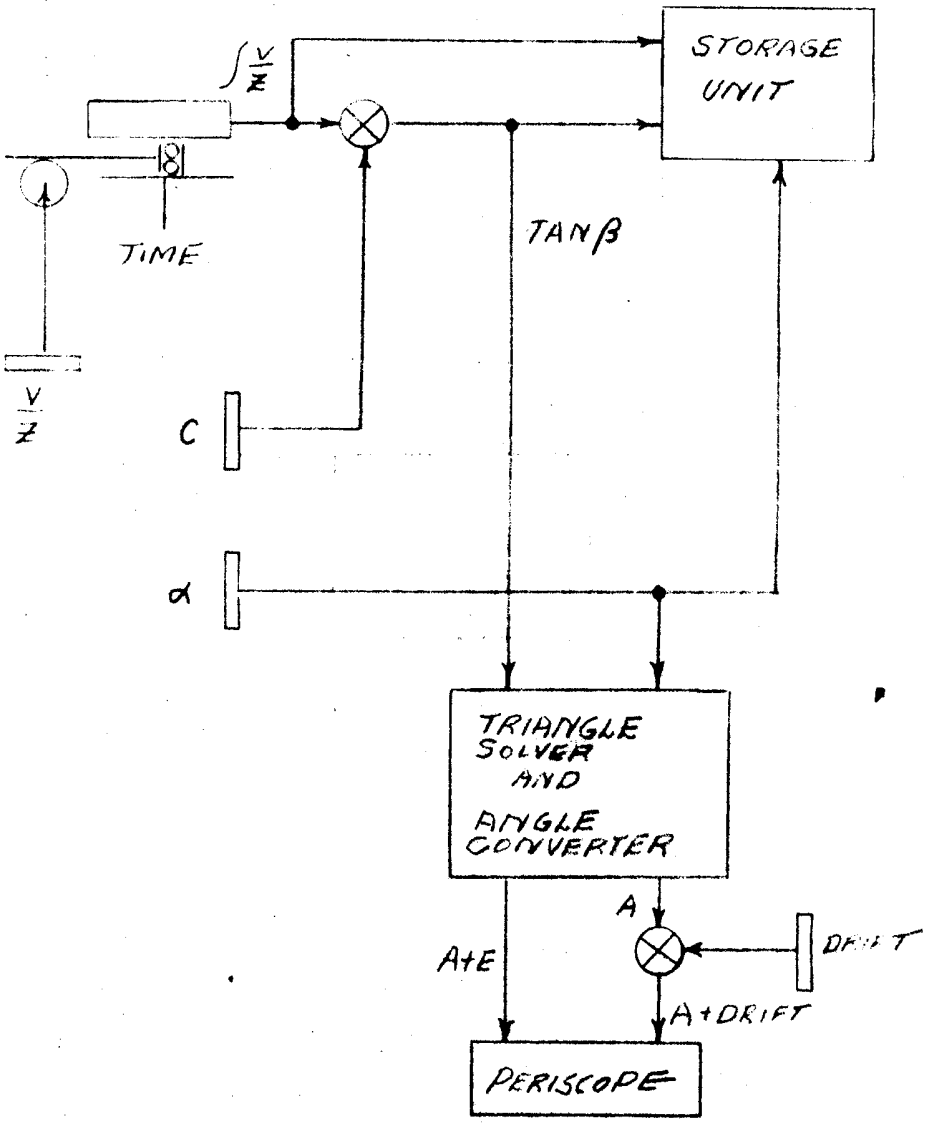

FIG. 12 POSSIBLE SYSTEM ARRANGEMENT

Sanitized Copy Approved for Release 2011/08/22 : CIA-RDP89B00487R000300650003-9

Sanitized Copy Approved for Release 2011/08/22 : CIA-RDP89B00487R000300650003-9

of the Y_0 coordinate. The input α on the other hand varies the position of the line of sight in a lateral direction, parallel to the X_0 axis.

The arrangement illustrated in Figure 12 forces the observer to make separate adjustments of C and α. Because these adjustments in the position of the line of sight will be the most often used by the observer, it has been recognized as more desirable that these controls be effected through the use of a joy stick arrangement. This would enable the observer to move the line of sight from one object to another with the least amount of manual action. One possibility would be a joy stick, movable in two coordinates, which controls the input to two additional integrators whose outputs would be connected to the C and α shafts respectively. This would provide a type of so-called velocity control over the position of the line of sight since a given deflection of the joy stick would produce a rate of change in the position of the line of sight in a direction corresponding roughly to the displacement of the joy stick. Such an arrangement, however, has been waived in favor of a much simpler arrangement which still provides a joy stick type control for manipulating the position of the line of sight and yet avoids the use of additional integrators.

By observing that in the angle converter there is a movable member whose orientation represents the position of the line of sight, the idea immediately suggests itself of extending this member such that it may be grasped and adjusted from time to time by the observer. This would provide the observer with a displacement type control over the position of the line of sight since the displacement of the control member corresponds exactly to the displacement of the line of sight. An arrangement according to this idea is illustrate schematically in Figure 13 where it is assumed that the combined angle converter and triangle solver is used. The

Sanitized Copy Approved for Release 2011/08/22 : CIA-RDP89B00487R000300650003-9

Sanitized Copy Approved for Release 2011/08/22 : CIA-RDP89B00487R000300650003-9

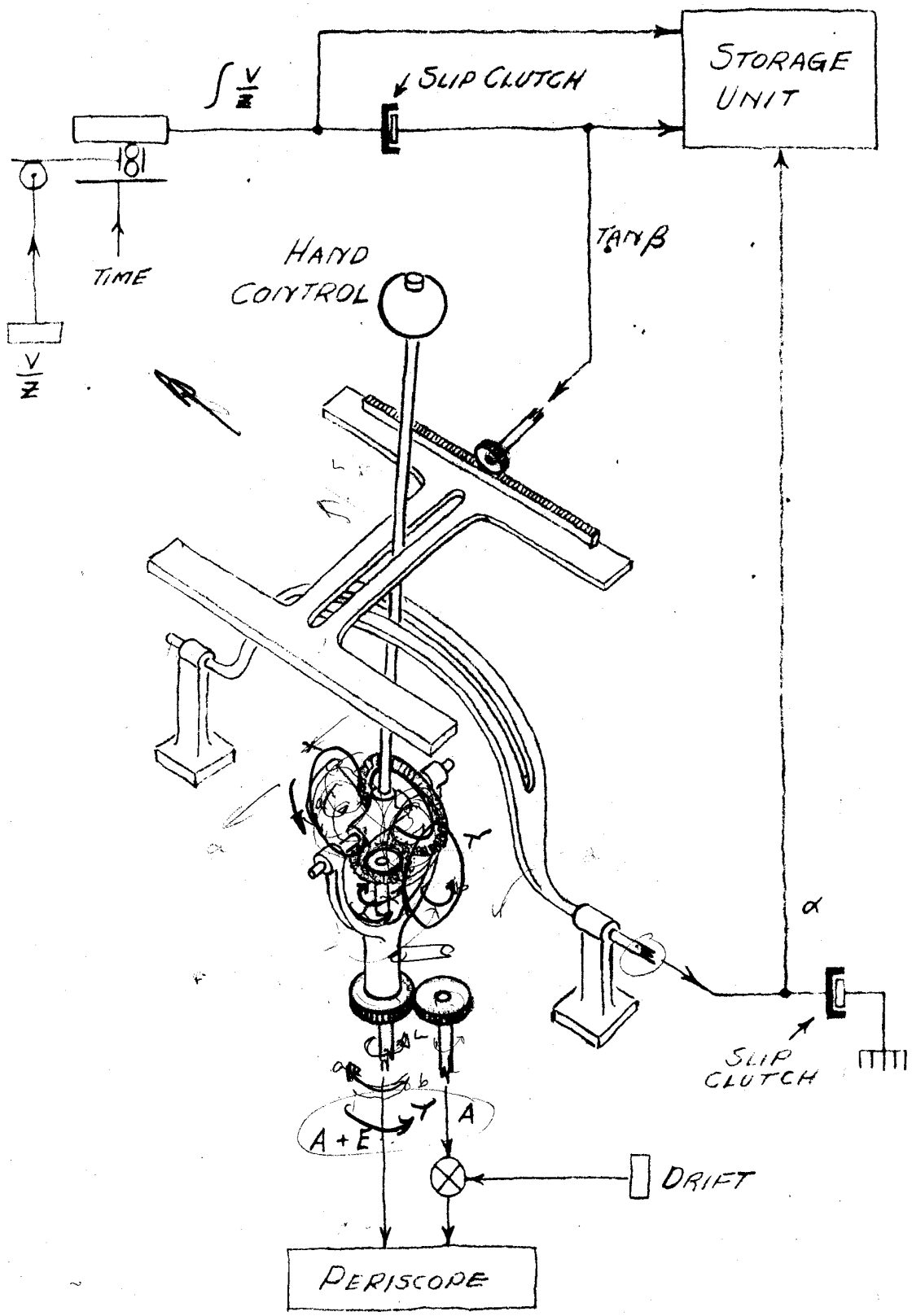

FIG. 13 SIMPLIFIED JOY-STICK CONTROL

Sanitized Copy Approved for Release 2011/08/22 : CIA-RDP89B00487R000300650003-9

Sanitized Copy Approved for Release 2011/08/22 : CIA-RDP89B00487R000300650003-9

principle can be similarly executed using the separate triangle solver and angle converter mechanisms described previously.

Notice in the arrangement shown in Figure 13 that the differential which formerly occurred in the output of the mechanical integrator has been eliminated. However, in order that the adjustments of the hand control may be made without affecting the output of the integrator, a slip clutch must be inserted between the integrator and the tan β shaft. Thus, the additive corrections to tan β are made directly by the observer's hand motion on the line of sight member of the angle converter. It is intended that the slip clutch transmit sufficient torque to drive the hand control and periscope during times that its motion is not opposed by the observer and yet slip freely enough to give the observer ease in repositioning the line of sight. A similar slip clutch is illustrated to be connected between the angle α shaft and structure such that when not attended by the observer the mechanism will adequately hold the value of α last set in.

Notice that if the hand control mechanism is physically aligned with the observer's system of axes, then motions of the hand control joy stick will correspond directly to motions of the line of sight and a good hand control sensing provision is achieved. Two possibilities exist in this connection, one being that the line of sight member is always kept parallel to the direction of the line of sight in which case the observer would think in terms of pointing the line of sight member in the direction he wishes to look. This has the effect, however, of causing the hand held portion of the joy stick to move in a direction that is opposite to the apparent direction of motion of the cross hair seen through the periscope with respect to objects in the field. The preferred arrangement would

Sanitized Copy Approved for Release 2011/08/22 : CIA-RDP89B00487R000300650003-9

Sanitized Copy Approved for Release 2011/08/22 : CIA-RDP89B00487R000300650003-9

seem to be that in which the direction of rotation of the angles transmitted to the periscope are reversed from the direction necessary in the case just described whereupon the line of sight member would always be physically oriented as a mirror image of the line of sight as seen reflected in the X_oY_o plane. Under this arrangement the direction of motion of the hand held portion of the line of sight member would be in the same direction as the apparent motion of the cross hair with respect to objects in the field. The latter arrangement is assumed in the presently proposed design.

VII CHARACTERISTIC ROTATION OF THE PERISCOPE FIELD

In a previous section the assumption was stated that the periscope scanning principle would be such as to avoid undesirable rotation of images seen in the field of view. It is worthwhile to introduce a special discussion of this point since the definition of undesirable image rotation as regarded in the present circumstance may differ from that encountered in other instances.

In certain types of sighting problems particularly that associated with bombing periscopes, it is desired for certain purposes that all objects in the field of view that are actually standing vertical always appear upright to the observer independent of the direction from which the object is being viewed. In other words, the smoke stack on a building should always appear upright to the observer whether he be sighting forward or aft of his position. This requirement is not usually satisfied without the addition of special derotation devices both in the periscope and in certain other parts of the equipment. In particular, there is always the problem of properly resolving the hand control inputs such that the proper sensing between hand control motion and line of sight motion is preserved.

Sanitized Copy Approved for Release 2011/08/22 : CIA-RDP89B00487R000300650003-9

Sanitized Copy Approved for Release 2011/08/22 : CIA-RDP89B00487R000300650003-9

Now because of the simplification that has been introduced in the hand control portion of the sighting and memory system, it would not be a simple matter to alter the sensing of the hand control input for purposes of keeping proper alignment with some special form of image presentation. Hence, in this system the term undesirable image rotation pertains to any situation that does not agree with the basic control sense provided by the hand control mechanism.

Consider now the motion in the line of sight that would take place when the hand control is moved in some radial direction from its center position. Such a motion would cause the line of sight to move in such a way that the angle A would remain constant. Under these circumstances the line of sight may be said to be sweeping through a plane containing the Z_o axis (refer to Figure 3). Thus, in respect to objects in the field of view, the line of sight would appear to be moving along that dimension that is parallel to the Z_o axis. Thus, for the proper image orientation to occur, any object in the field of view standing erect or parallel to the Z_o axis should be rotated by an amount just equal to angle A associated with the position of that object. It so happens that such a condition is naturally provided by the periscope scanning principle referred to previously where the scanning prism causing the line of sight to be deflected in elevation is the equivalent of a roof prism rotated about an axis perpendicular to the intersection of the roof surfaces. The exact details of the optical principles involved do not comprise subject matter for this report, however.

In order to better understand the image orientation that would occur in the system being described let it be imagined for purposes of illustration that the X_oY_o plane is the surface of the earth, and that the periscope

Sanitized Copy Approved for Release 2011/08/22 : CIA-RDP89B00487R000300650003-9

Sanitized Copy Approved for Release 2011/08/22 : CIA-RDP89B00487R000300650003-9

is being carried in an aircraft flying at the altitude z. Let it further be imagined that some group of objects on the ground are being observed with the periscope from different positions. This is illustrated in Figure 14 where six different positions for the line of sight have been selected for representation. The objects being sighted are a building from which rises a cylindrical chimney and a circular storage tank situated alongside the building. On the assumption that in each sighting instance the periscope cross hairs are aimed at the base of the chimney, the appearance of images seen from the six different sighting positions would be somewhat as illustrated in Figure 15. In each case the cross hair containing the arrowhead at its tip indicates the direction that appears upright to the observer. Notice in each view that the long dimension of the chimney appears to be tilted by an amount equal to the azimuth angle A. For any of the sighting positions a further deflection of the joy stick in the direction along which it had been initially deflected (for instance, along the same azimuth angle A) would appear to cause the cross hairs to move up the chimney.

It should be remembered in leaving this point that the image rotation just described is a natural consequence of the simplicity that has been achieved in the joy stick control mechanism. To create any other image orientation would require the introduction of some means for resolving the hand control motions along different axes depending upon the direction of sighting.

VIII THE DRIFT PROBLEM

The conditions for object motion in the presence of so-called drift were stated previously in equations (7) and (8). In the presence of drift, the velocity of an object will have a component parallel to the X_o axis

Sanitized Copy Approved for Release 2011/08/22 : CIA-RDP89B00487R000300650003-9

Sanitized Copy Approved for Release 2011/08/22 : CIA-RDP89B00487R000300650003-9

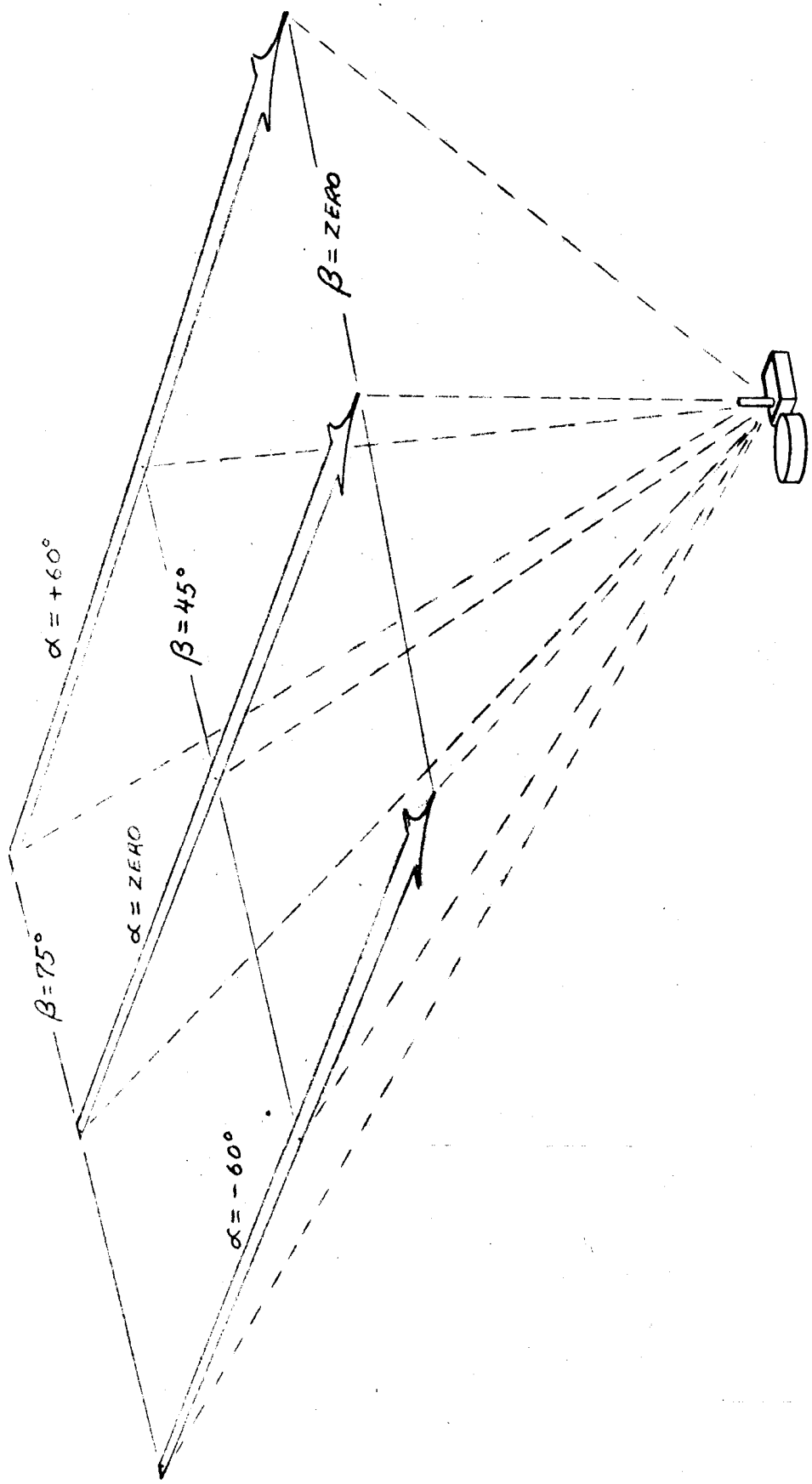

FIG. 14 IMAGINARY SIGHTING CONDITIONS

Sanitized Copy Approved for Release 2011/08/22 : CIA-RDP89B00487R000300650003-9

Sanitized Copy Approved for Release 2011/08/22 : CIA-RDP89B00487R000300650003-9

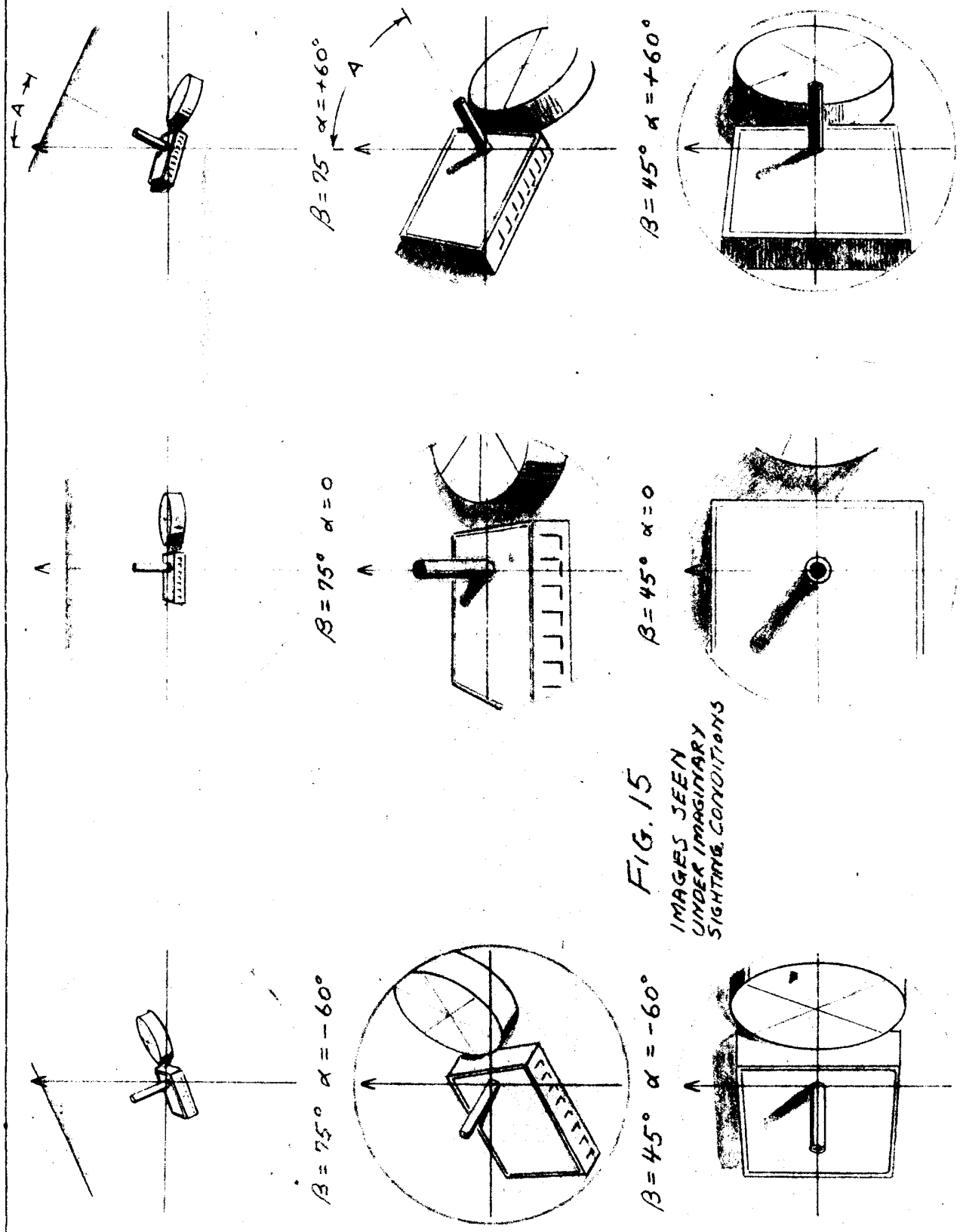

FIG. 15
IMAGES SEEN UNDER IMAGINARY SIGHTING CONDITIONS

Sanitized Copy Approved for Release 2011/08/22 : CIA-RDP89B00487R000300650003-9

Sanitized Copy Approved for Release 2011/08/22 : CIA-RDP89B00487R000300650003-9

of the observer's coordinate system and therefore will not be moving in a path that is parallel to the Y_0 axis. Since object motion still takes place in the X_0Y_0 plane, however, it is always possible to describe two other X and Y axes such that the velocity of an object has no component in the newly defined X axis. This is illustrated in Figure 16 where it may be seen that the new axes are found by simply rotating the observer's coordinate system about the Z_0 axis by an amount equal to the drift angle θ. Since, in the new set of axes, the total velocity of an object occurs parallel to the Y axis, the rate of change of the coordinate values takes place according to the same conditions that were stated previously for zero drift. Thus, by simply rotating the axis system by an amount equal to the drift angle the generation of the tracking function would remain correct as described since there would still be no requirement to bring about a rate of change in the angle α in order to produce tracking.

The rotation of axes just mentioned could be accomplished by physically rotating the entire periscope about the Z_0 axis by an amount equal to the drift angle. However, a little thought in respect to the scanning principle used in the periscope will reveal that an exactly similar result may be obtained by simply making an additive correction to the angle A. Thus, in the system arrangement shown throughout this report it may be observed that a mechanical differential is inserted in the azimuth drive between the periscope and the angle converter. The input to this differential is brought out as a manual adjustment to be made by the observer, and the angular displacement of this input will actually correspond to the drift angle measured.

The procedure for measuring the drift angle would be carried out

Sanitized Copy Approved for Release 2011/08/22 : CIA-RDP89B00487R000300650003-9

Sanitized Copy Approved for Release 2011/08/22 : CIA-RDP89B00487R000300650003-9

during a tracking operation by adjusting the drift angle input until tracking of an object will proceed without any further adjustment of the angle α. This procedure is very similar to the operation required to obtain the proper rate input (V/z) wherein the adjustment in rate must be made until tracking of an object proceeds without added corrections along the Y_o coordinate.

Because of the simplicity of handling the drift problem by rotation of the periscope axes a slight error is introduced in the computation for the time of arrival of an object at the Z_oX_o plane as well as the value of α that obtains at the time of crossing. The source of these errors may be understood by an examination of the illustration given in Figure 17. Notice that the value of α that is measured is in respect to the displaced axis system whereas the desired value would be measured in respect to the fixed set of axes (designated as X_o and Y_o). Similarly, in the timing operation the desired signal output is created at the time an object crosses the XZ_o plane taken in respect to the rotated axes whereas the desired output would occur when the object crosses the X_oZ_o plane measured with respect to the fixed axes. The magnitude of these errors can be shown to equal:

$$\text{error in } \tan \alpha_o = \tan \alpha \left(1 - \frac{1}{\cos \theta}\right) \qquad (12)$$

$$\text{error in } \tan \beta_o = \tan \alpha \sin \theta \qquad (13)$$

from which it may be appreciated that the errors are relatively small for small drift angles. It is assumed that such errors may be tolerated in the system since to correct such errors would add materially to the complexity of the tracking mechanism. For instance, to mention briefly one possible change in the construction of the angle converter that would

Sanitized Copy Approved for Release 2011/08/22 : CIA-RDP89B00487R000300650003-9

Sanitized Copy Approved for Release 2011/08/22 : CIA-RDP89B00487R000300650003-9

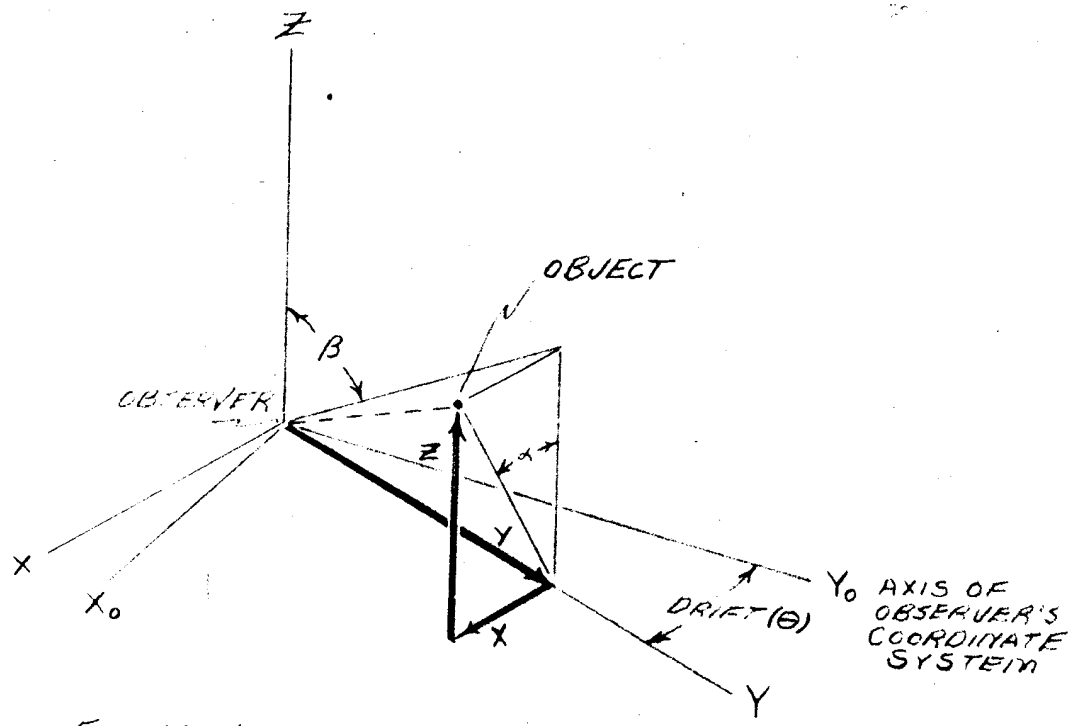

FIG. 16 AXIS ROTATION TO PROVIDE FOR DRIFT

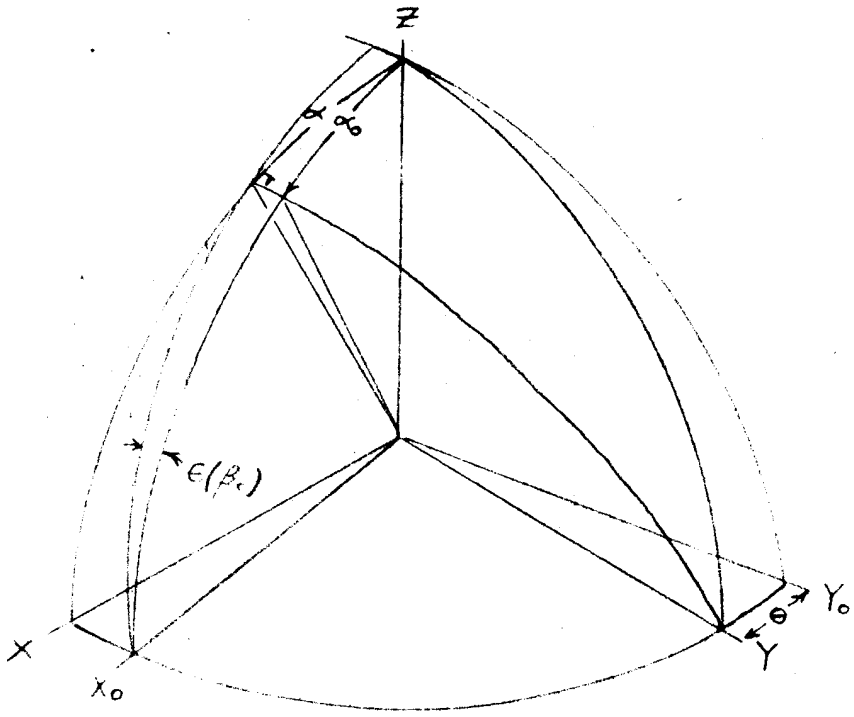

FIG. 17 PREDICTION ERRORS IN PRESENCE OF DRIFT

Sanitized Copy Approved for Release 2011/08/22 : CIA-RDP89B00487R000300650003-9

Sanitized Copy Approved for Release 2011/08/22 : CIA-RDP89B00487R000300650003-9

eliminate these prediction errors, return for a moment to the illustration shown in Figure 8. It may be appreciated that the construction of the yoke supported by the axis labeled α is such as to cause the line of sight to sweep through a plane containing the α axis but which is tilted away from the Z_0 axis by an amount equal to the angle α. Since the α axis is here shown constructed parallel to the Y_0 axis of the system, the intersection of this plane with any other plane normal to the Z_0 axis is a line parallel to the Y_0 axis. Hence, the line of sight would be caused to track objects whose velocity is parallel to the Y_0 axis as is the case of zero drift. For the case where drift is not zero, it would be perfectly feasible to rotate the α axis away from the Y_0 axis by an amount equal to the drift angle whereupon the intersection of the plane created by the α yoke with a plane normal to the Z_0 axis would be a line rotated from the Y_0 axis by the drift angle. This variation would cause the line of sight to track objects whose velocity is not parallel to the Y_0 axis as is required in the presence of some drift angle. This method of correcting for drift would not affect the solution for the condition $\beta = 0$, since the position of the X_0 axis has not been disturbed. This would eliminate the error stated in Equation (13). However, a small error in the computation for α would still exist. In order to eliminate this error also, it would be necessary to measure the angle α about the undisturbed Y_0 axis that has been displaced by an amount equal to the drift angle. These variations in the construction of the angle converter are not contemplated for the present design of the sighting and memory system.

IX THE DIGITAL MEMORY UNIT

In section IV the method was discussed briefly for timing the interval

Sanitized Copy Approved for Release 2011/08/22 : CIA-RDP89B00487R000300650003-9

Sanitized Copy Approved for Release 2011/08/22 : CIA-RDP89B00487R000300650003-9

required for some object to pass from the position being tracked to some predetermined position such as in the X_oZ_o plane. This involves the use of a circular disc containing a number of displaceable pins around its periphery. To begin the timing operation one of the pins is displaced from its rest position by a push rod member which has been rotated from some zero position by an amount equal to the tangent of the angle β. The disc containing the displaced pin is continuously rotated at a rate proportional to the rate of change of tan β and hence, the time interval required for a displaced pin to reach the zero position is equal to the time interval desired to be measured with respect to the object being tracked. Upon arriving at the zero position a displaced pin closes a switch which creates the desired timing signal after which the displaced pins are returned to their original setting in readiness for the next timing operation.

It has been mentioned that it is desirable when beginning such timing operations also to record the angle α associated with the object being timed, and furthermore, to be able to read out this angle to other equipment at the end of each timing interval. The method for accomplishing this which works well in conjunction with the timing operation already described, takes advantage of a digital code for representing the magnitude of the angle α. Values may then be stored by pushing out a second group of pins adjacent to the selected timing pin in the rotating pin disc. When the timing pin reaches the zero position, the second group of displaced pins actuate feeler contacts enabling the code representation for the stored angle α to be read out to auxiliary equipment. The nature of this code and its conversion to other forms of data representation are explained in the following sections.

Sanitized Copy Approved for Release 2011/08/22 : CIA-RDP89B00487R000300650003-9

Sanitized Copy Approved for Release 2011/08/22 : CIA-RDP89B00487R000300650003-9

The complete storage unit is illustrated schematically in Figure 18. It consists of three disc-like members supported so as to rotate independently about a common axis. The first of these is the pin disc containing several concentric rows of displaceable pins. The outermost row of pins is used for the timing operation as already described. The remaining rows of pins are pushed out selectively to form the code representation for the value of each angle α associated with a timing pin. This disc is driven continuously in a counter clockwise direction by connection to the output of the mechanical integrator, whereupon its rate of rotation is seen to be proportional to the quantity V/s. Adjacent to the pin disc at some designated zero position are feeler contacts for each row of pins such that a separate electrical circuit is closed by any displaced pin which arrives at the zero position. A wedge or some other device described as the pin reset block is situated just beyond the contactor strip in a counterclockwise direction and is implied to perform the function of returning any displaced pin to its original setting after passing the zero position.

The second disc contains an array of push rods situated along a radius of the disc and spaced such that there is one push rod which will displace pins in the timing row on the pin disc, and one push rod for each row of pins used for encoding the angle α. The push rod disc is driven by connection to the input of the angle converter such that the angular displacement of the push rods from the zero position is always proportional to the magnitude of tan β.

A third disc contains raised teeth on the side next to the push rods, there being one row of teeth for each of the α code push rods,

Sanitized Copy Approved for Release 2011/08/22 : CIA-RDP89B00487R000300650003-9

Sanitized Copy Approved for Release 2011/08/22 : CIA-RDP89B00487R000300650003-9

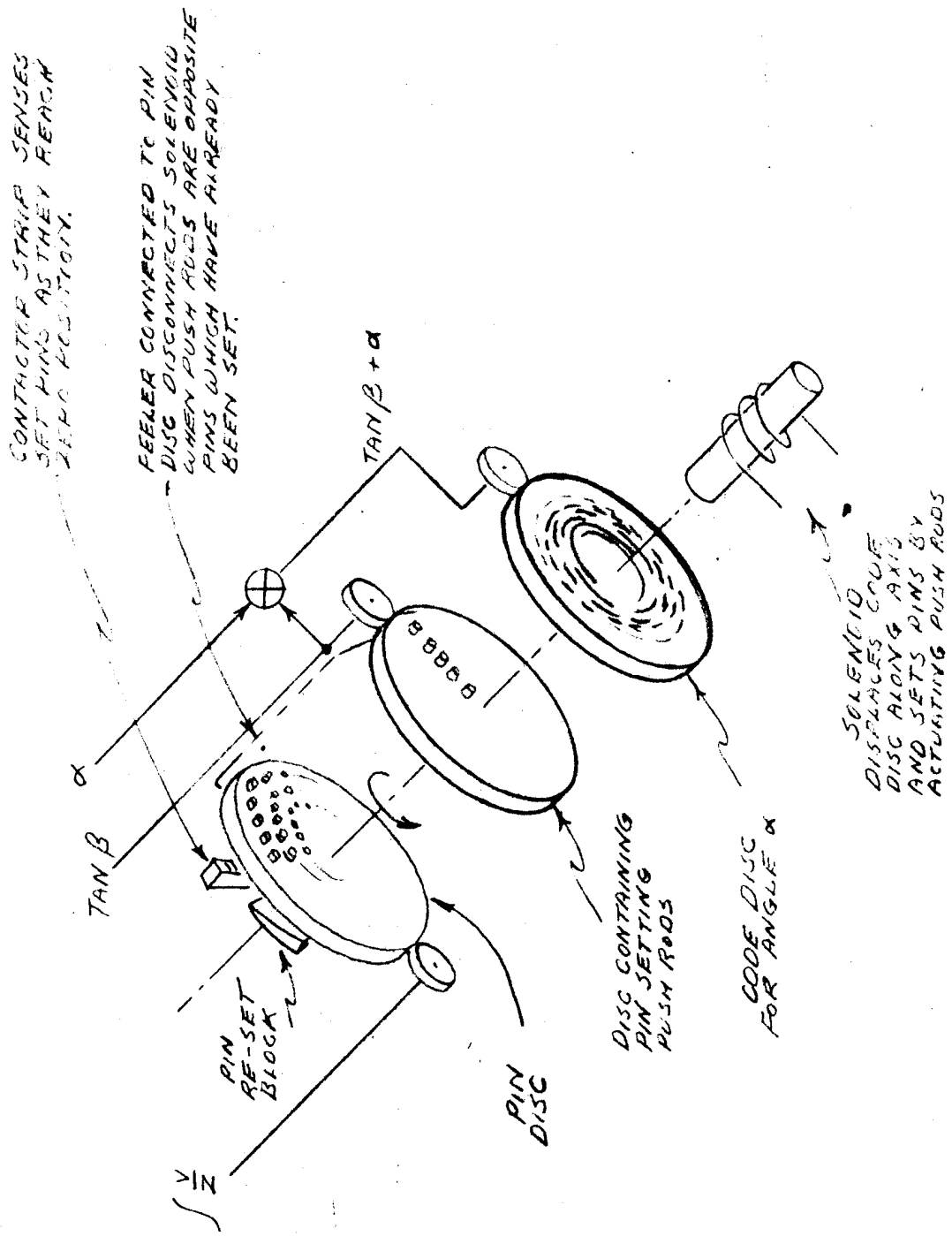

FIG. 18 THE STORAGE UNIT

Sanitized Copy Approved for Release 2011/08/22 : CIA-RDP89B00487R000300650003-9

Sanitized Copy Approved for Release 2011/08/22 : CIA-RDP89B00487R000300650003-9

and a continuous raised rim opposite the timing push rod. The raised teeth in the code disc are distributed in accordance with the code such that different angular displacements of the code disc relative to the push rod disc will represent variations in the angle α. The code disc is supported in such a way that it may be translated along the axis of rotation by the action of a solenoid. Displacing the code disc toward the push rod disc always depresses the timing push rod and also depresses a particular sequence of code push rods depending upon the value of the code which happens to lie opposite the line of pushrods. The push rod in turn displaces pins in the pin disc.

Now in order for the angular displacement of the code disc (with respect to the push rod disc) to be proportional to the angle α, the code disc must be rotated with respect to the zero position through an angle that is proportional to $\tan \beta + \alpha$. This addition of angles is performed by a mechanical differential within the storage unit. A shaft rotation proportional to the angle α needed for these purposes is derived in the angle converter as described previously.

From the foregoing description, it may be realized that when an object is being tracked, the storage unit is continuously in readiness to begin a timing operation and store the angle α which exists at the beginning of the timing interval. Such an action is brought about by the creation of a momentary signal to the storage unit solenoid which displaces an appropriate group of pins in the pin disc. A number of such storage operations may be carried out in sequence, the principle limitation being the pin capacity of the pin disc. There is the additional limitation that should it be attempted to store data on two objects whose time of arrival at the predetermined position is the same, but occurring at different values

Sanitized Copy Approved for Release 2011/08/22 : CIA-RDP89B00487R000300650003-9

Sanitized Copy Approved for Release 2011/08/22 : CIA-RDP89B00487R000300650003-9

for the angle , the result would be one of setting two different angle code values in the same group of pins. Since the equipment receiving information from the storage unit is only capable of using one piece of information at a time, such a redundancy must be avoided. This is to be accomplished in the storage unit by an additional feeler contact carried on the push rod disc which examines the outer row of pins in the pin disc in such a way as to open a switch whenever a push rod passes over the location of pins which have already been displaced. By connecting this switch in series with the solenoid actuator circuit, the storage unit is effectively disarmed from setting two pieces of data at the same location in the pin disc. Thus, the observer need have no restriction on the selection of objects to be timed since the mechanism will automatically accept the first and reject the second information on two objects whose arrival time at the predetermined position is the same. While it would be possible to do so, there has been no requirement to include the provision of signalling the observer when redundant object information is being introduced.

It is anticipated that actuation of the storage unit solenoid will be instituted by a simple push button operation located for the greatest convenience of the observer. His procedure then is simply to place the periscope cross hairs on an object and, if desired, to track that object for a short interval any time during which the memory push button may be depressed which will transfer information in the storage unit. The observer may thus proceed from object to object with minimum concern to the data storage process.

I THE CODING METHOD

The type of code that is being adopted for angular data representation in the sighting and memory system is one that appears to be widely known

Sanitized Copy Approved for Release 2011/08/22 : CIA-RDP89B00487R000300650003-9

Sanitized Copy Approved for Release 2011/08/22 : CIA-RDP89B00487R000300650003-9

and used for purposes similar to those encountered here. It is derived through a simple manipulation of the binary numbering system. Such codes are referred to by various names, one of which is the term "syncopic code" which was learned from Dr. W. B. Klemperer of the Douglas Aircraft Company, Incorporated. A comparison of numbers in the ordinary decimal system with the corresponding numbers in straight binary and syncopic code are given in Table I, for the numbers 0 to 15. Notice that in the syncopic code numbers, the special property is exhibited that between any two adjacent numbers the difference is only by one digit. This is the primary property for which this code is chosen in applications such as this since there is always an uncertainty in reading a digit near the position of its change in value from zero to 1 or vice versa. In the syncopic code such uncertainties exist in only one digit at a time and hence, an uncertainty of only one unit error exists. In the ordinary binary code, on the other hand, adjacent numbers may differ in several digits and the combination of digit reading uncertainties may contribute errors much larger than one unit.

The syncopic code possesses either properties which are not necessarily of importance in the present application but are nevertheless worthy of appreciation. To explain these, it is worthwhile to review briefly certain meanings associated with a binary numbering system. In the straight binary numbering system a digit has the value one or zero depending on whether or not the number being represented is to contain the number 2 raised to the power of that digit. Thus, the decimal number 5 is represented in binary notation as 0101 meaning that $5 = 2^2 + 2^0$. The lowest order digit is referred to as the 0th digit and the largest number that can be represented by a group of binary digits is $2^{n+1} - 1$ where n is the highest order

Sanitized Copy Approved for Release 2011/08/22 : CIA-RDP89B00487R000300650003-9

Sanitized Copy Approved for Release 2011/08/22 : CIA-RDP89B00487R000300650003-9

TABLE I

Decimal Number	Binary Number (3rd digit)	(2nd digit)	(1st digit)	(0th digit)	Syncopic Code (3rd digit)	(2nd digit)	(1st digit)	(0th digit)
0	0	0	0	0	0	0	0	0
1	0	0	0	1	0	0	0	1
2	0	0	1	0	0	0	1	1
3	0	0	1	1	0	0	1	0
4	0	1	0	0	0	1	1	0
5	0	1	0	1	0	1	1	1
6	0	1	1	0	0	1	0	1
7	0	1	1	1	0	1	0	0
8	1	0	0	0	1	1	0	0
9	1	0	0	1	1	1	0	1
10	1	0	1	0	1	1	1	1
11	1	0	1	1	1	1	1	0
12	1	1	0	0	1	0	1	0
13	1	1	0	1	1	0	1	1
14	1	1	1	0	1	0	0	1
15	1	1	1	1	1	0	0	0

Sanitized Copy Approved for Release 2011/08/22 : CIA-RDP89B00487R000300650003-9

FE3

Sanitized Copy Approved for Release 2011/08/22 : CIA-RDP89B00487R000300650003-9

digit included. Now one of the properties of the synscopic code is that by changing the sign (changing 1's to 0 and vice versa), of the highest order digit, then the new number formed is the compliment of the original taken with respect to the largest number $2^{n+1} - 1$. Thus, in a device employing the synscopic code the direction of number increase may be reversed simply by changing the sign of the highest order digit.

Another property of the synscopic code which is sometimes of interest is that in changing from the highest number represented ($2^{n+1} - 1$) back to zero, only one digit is affected. Thus, the synscopic code closes on itself so to speak, avoiding ambiguity even in those cases where it may be necessary to pass from the highest number back to zero.

Some of these properties of the synscopic code may be more fully appreciated by studying the code pattern illustrated in Figure 19. Notice that the pattern contains 8 concentric rows each one of which pertains to a digit in the synscopic code. A blackened section of the code indicates that the value of the digit at that position is one. Since this pattern pertains to 8 digits, the maximum number represented is $2^8 - 1 = 255$. Including the number zero, such a pattern has then divided the circle into 256 parts. The raised tooth portion of the code disc mentioned previously as part of the storage unit will possess a distribution similar to that illustrated by the synscopic code pattern. A value for the angle α is thereby represented as a certain number in the synscopic code, and because of the code properties, the uncertainty of reading an angle whose true value lies midway between two synscopic code numbers will never be greater than one unit.

Sanitized Copy Approved for Release 2011/08/22 : CIA-RDP89B00487R000300650003-9

Sanitized Copy Approved for Release 2011/08/22 : CIA-RDP89B00487R000300650003-9

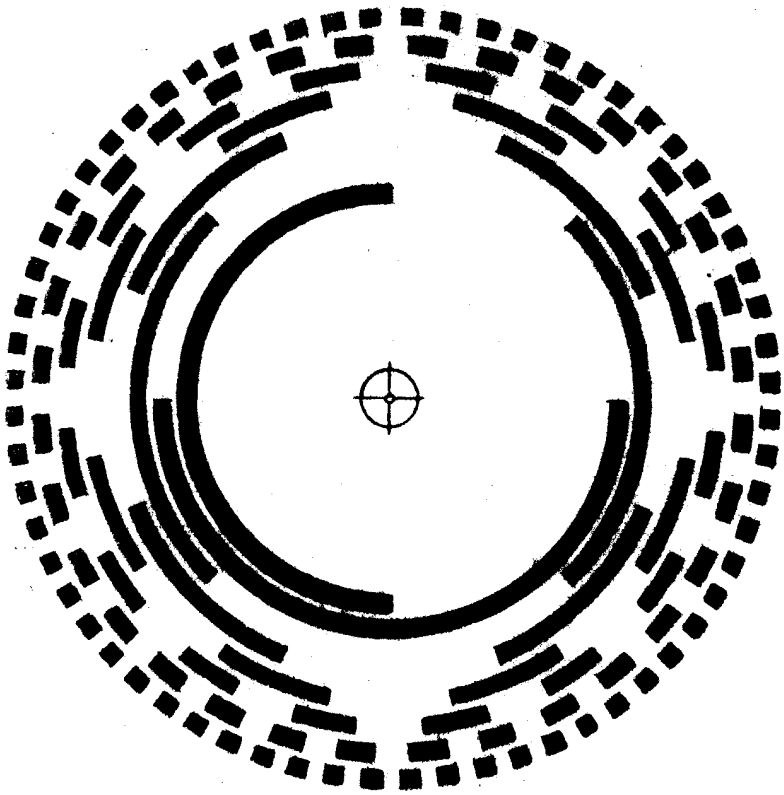

FIG 19 SYNCOPIC CODE PATTERN

FE3

Sanitized Copy Approved for Release 2011/08/22 : CIA-RDP89B00487R000300650003-9

Sanitized Copy Approved for Release 2011/08/22 : CIA-RDP89B00487R000300650003-9

XI CONVERSION FROM STORED CODE TO SHAFT ROTATION

The syncopic code described in the previous section was selected primarily for its single digit switching property. While not foreseen as a requirement in the present system, it is worthwhile to note the simplicity with which the syncopic code is converted to an ordinary binary code. Comparing the syncopic code with the binary numbers given in Table I, it is seen that the syncopic code may be converted to the ordinary radix 2 number by applying the following simple rule. Starting with the highest order digit, reverse the sense of any digit preceeded by the numeral 1 and proceed thus in a cumulative manner to the lowest order digit. Another way of stating the same rule is to say that every digit in the binary number is the same as the corresponding digit in the syncopic code except that its sense is reversed once for every 1 appearing in the higher orders of the syncopic code.

A relay circuit is illustrated in Figure 20 which obeys the rules just stated. Each relay is actuated when a 1 appears in the corresponding syncopic code digit. The output of the relay for that digit will possess a voltage depending on whether the relay is actuated and whether there are an even number of relays actuated in the higher orders. Otherwise, the output of a relay will not possess a voltage.

The arrangement for converting from syncopic code input to a shaft rotation output involves the use of a relay circuit very similar to that used for a conversion to the ordinary binary output. This is illustrated in Figure 21. At the positions used previously for generating the ordinary binary code output, resistors are inserted in a series arrangement whose values are proportional to the weight of each binary digit. The result

Sanitized Copy Approved for Release 2011/08/22 : CIA-RDP89B00487R000300650003-9

Sanitized Copy Approved for Release 2011/08/22 : CIA-RDP89B00487R000300650003-9

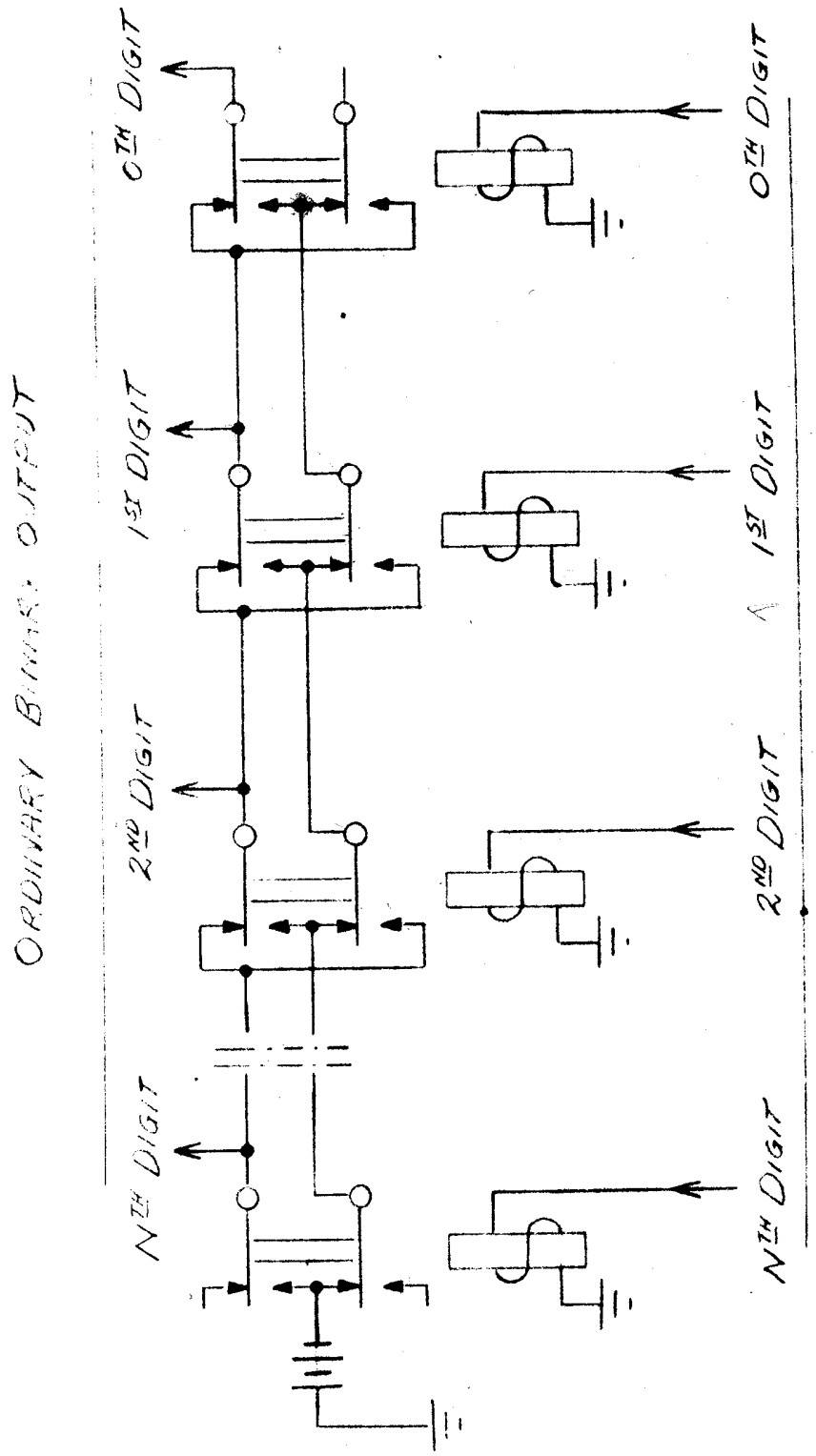

FIG. 20 CODE CONVERTER CIRCUIT

Sanitized Copy Approved for Release 2011/08/22 : CIA-RDP89B00487R000300650003-9

Sanitized Copy Approved for Release 2011/08/22 : CIA-RDP89B00487R000300650003-9

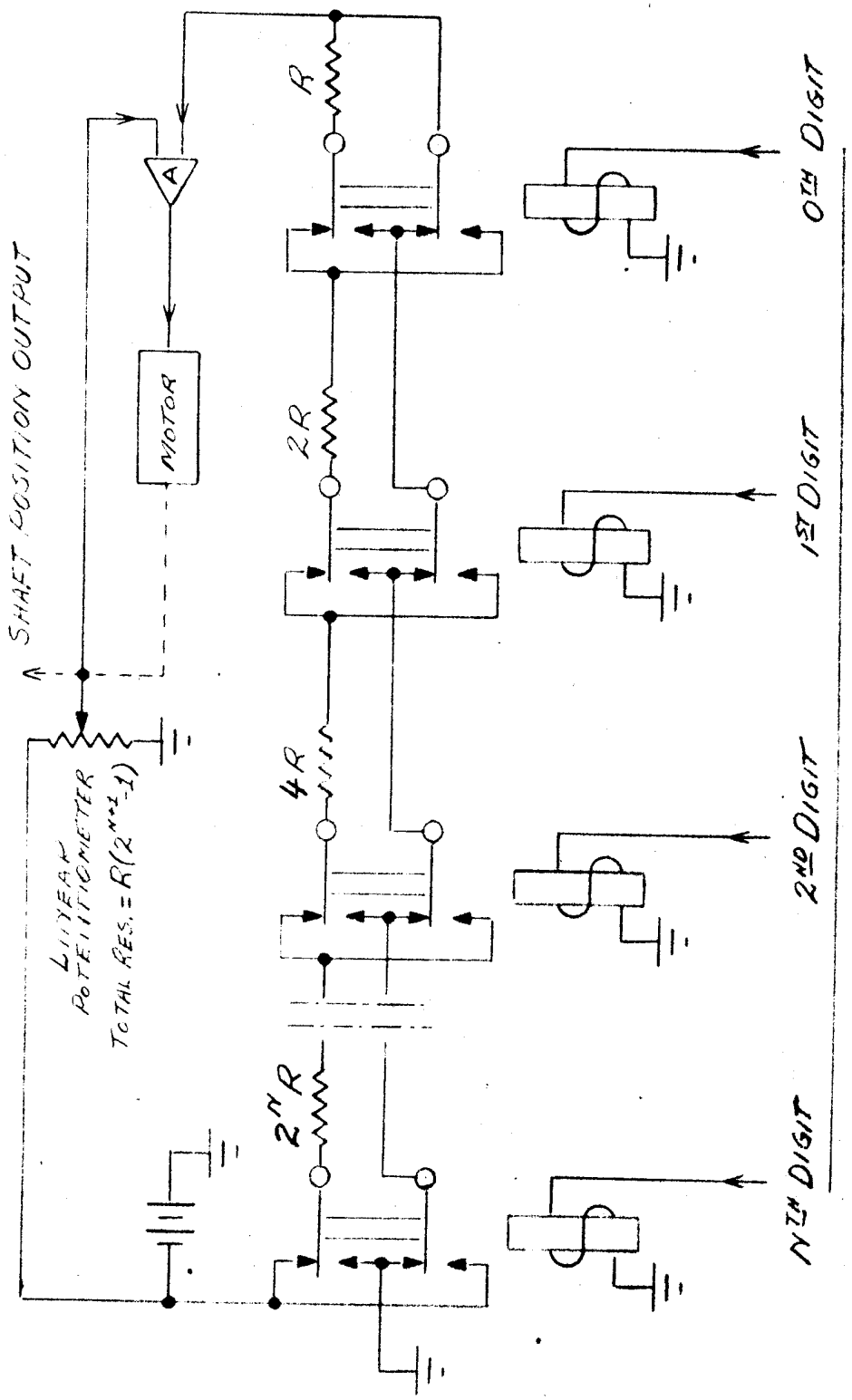

FIG 21 CODE TO SHAFT ROTATION CONVERSION

Sanitized Copy Approved for Release 2011/08/22 : CIA-RDP89B00487R000300650003-9

FE3

Sanitized Copy Approved for Release 2011/08/22 : CIA-RDP89B00487R000300650003-9

of such arrangement is that the relays and resistors create a voltage divider circuit where the voltage division ratio is proportional to the binary number represented by the synscopic code. This output voltage may then be followed up by an ordinary type of servo mechanism using a linear potentiometer as a feedback device.

Figure 22 illustrates an alternate arrangement for obtaining a shaft rotation output from a synscopic code input. Feedback from the shaft rotation output is obtained from a second synscopic code disc similar to that described previously which is arranged to actuate one set of relays. In this circuit a digit by digit comparison between the output shaft code value and the input code value is made, and either one of two circuits is energized depending on whether the output code value is greater or less than the input code value. Thus, the actuator (servo motor or other appropriate device) receives signals to drive it right or left that are of constant value, and hence, the operation of this follow-up device would be similar to that of a simple contactor type servo. The advantage that would be upheld for this arrangement is that it avoids the use of any amplifying devices for operating the servo. There would undoubtedly be required some additional provisions for stabilizing the operation of such a follow-up system.

XII CONCLUSION

The foregoing report explains the various operating principles that are being put to use in the construction of the sighting and memory system for the Projector Project. Design of the actual mechanism is proceeding in agreement with these concepts, and it is expected to witness operation of these devices within the next few months.

Sanitized Copy Approved for Release 2011/08/22 : CIA-RDP89B00487R000300650003-9

Sanitized Copy Approved for Release 2011/08/22 : CIA-RDP89B00487R000300650003-9

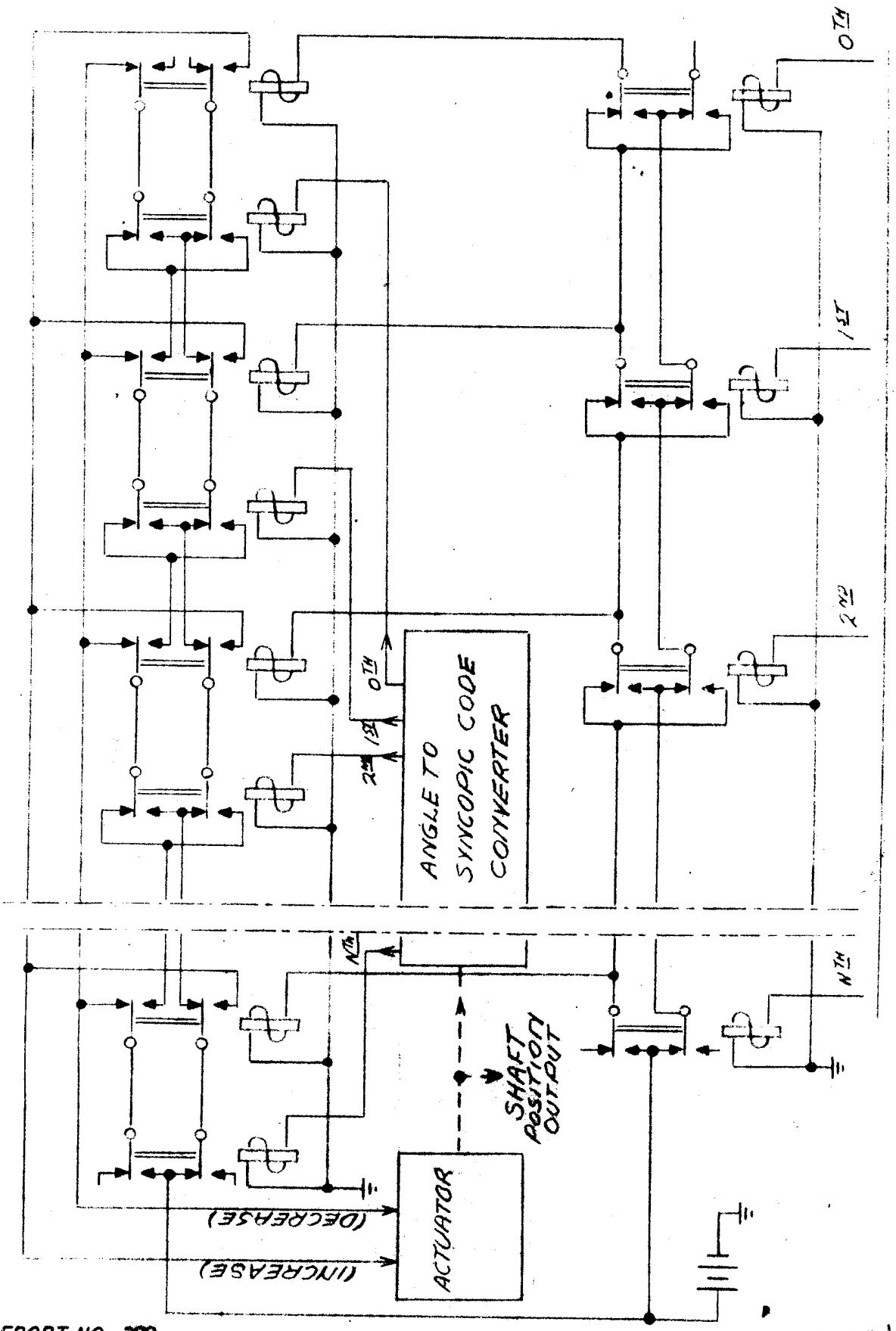

FIG. 22

Sanitized Copy Approved for Release 2011/08/22 : CIA-RDP89B00487R000300650003-9

Sanitized Copy Approved for Release 2011/08/22 : CIA-RDP89B00487R000300650003-9

APPLICATIONS

- [illegible] ARGETS OF
- [illegible] ETC.
- [illegible] CS
- [illegible]
- BOMB [illegible]
- SPECIAL MISSION TECHNICAL IN[illegible]

HYCON MFG COMPANY PASADENA, CALIFORNIA

close support aerial reconnaissance camera

TYPE KA 9

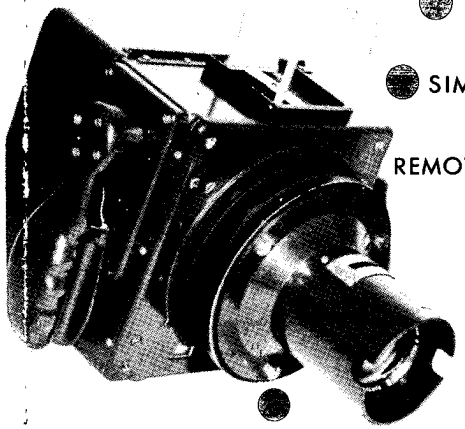

- WEIGHS ONLY 12½ LBS
- SPEEDS TO 1/800 SECONDS
- LONG FOCAL LENGTH LENS CONE
- SIMPLIFIED FILM FLATTENING—NO VACUUM
- REMOVABLE, DAYLIGHT LOADING, FILM CASSETTES
- NIGHT CAPABILITY
- MANUAL OR MOTOR DRIVE
- FILM RECORD NUMBERING
- ALUMINUM CONSTRUCTION — NO MAGNESIUM
- QUICKLY INTERCHANGEABLE LENS CONES

Hycon Mfg. Company

Sanitized Copy Approved for Release 2011/08/22 : CIA-RDP89B00487R000300650003-9

Sanitized Copy Approved for Release 2011/08/22 : CIA-RDP89B00487R000300650003-9

The KA-9 Camera is a light hand-held or mounted camera for aerial spotting, technical intelligence, or tactical mapping. The 4½ x 4½ format on 5 in. x 50 ft. film permits 120 exposures on one roll. The removable cassettes combined with a film slicer permits film economy when taking limited exposures. Recorded serial markings on the film, synchronized with an external counter permits accurate exposure identification.

Interchangeable manual and motor drive permits manual or semi-automatic operation by push-button or automatic operation through an intervalometer. Interchanging of manual and motor drives is completely foolproof. The drive interlock in the camera automatically resets to a neutral position upon removing the drive mechanism.

A focal plane self-capping shutter provides speeds of 1/800, 1/400, 1/200, and 1/100 sec. Higher speeds can be readily provided by adjustment of slit width. This shutter can be interchanged with a special capping shutter for night operation using flash bomb or cartridge.

Lens cones are easily interchangeable since the shutter is independent of the lens. 12 in. f/5.6 and 24 in. f/5.6 lenses are standard. Alternate lenses of 6 in. and 36 in. focal lengths can be provided.

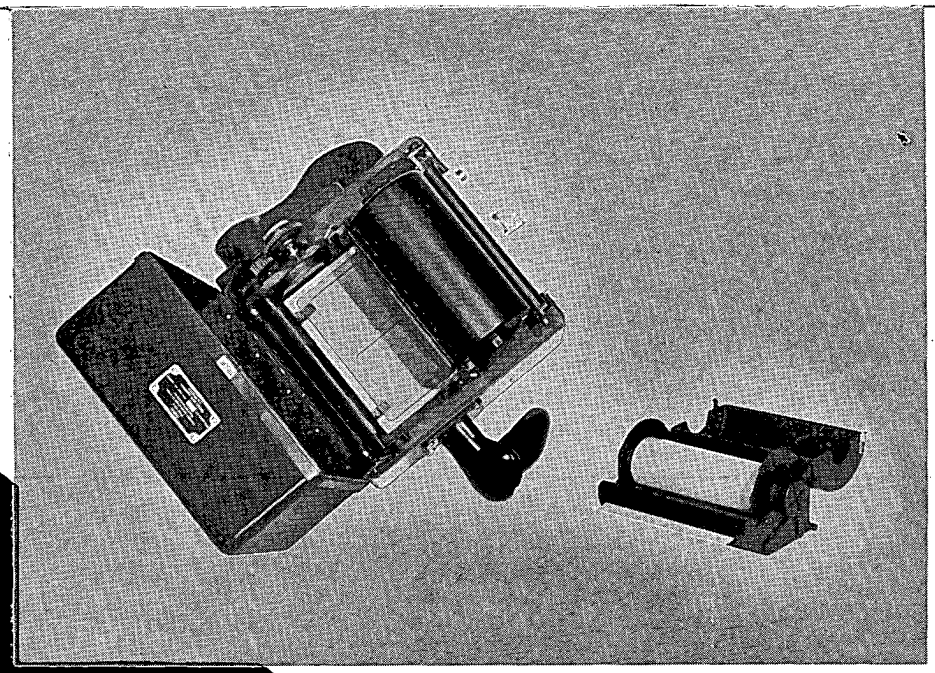

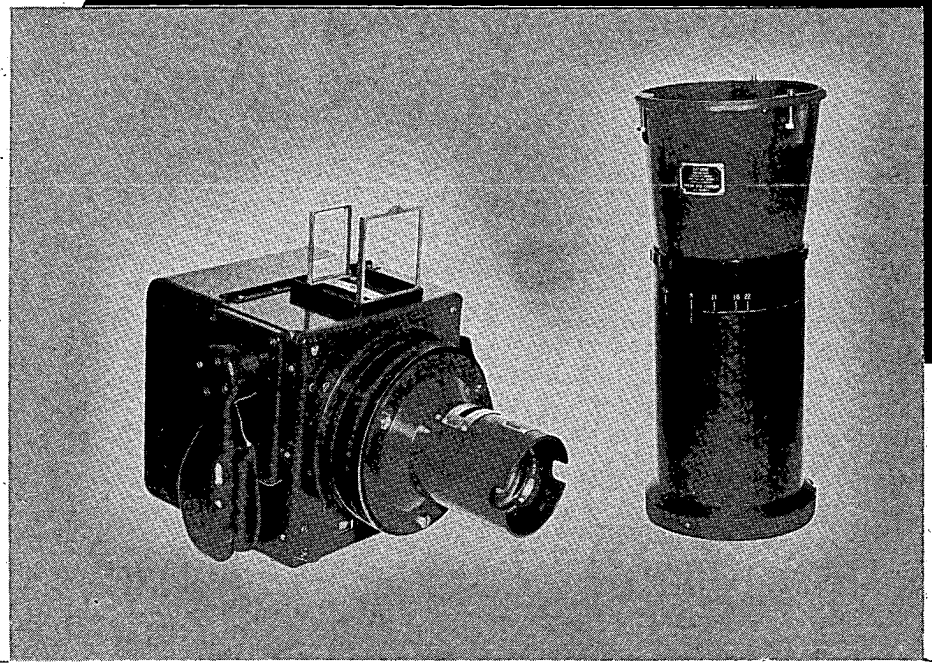

The camera weighs 12½ lbs. with the 12 in. lens cone and manual drive. No magnesium is used in the construction for the purpose of avoiding corrosion under adverse conditions.

Mechanical film flattening is provided; thus avoiding complexity and resulting increased maintenance and reliability problems inherent in vacuum systems. The camera mates with the standard A-17A Ring Mount. In the mounted position, motor or manual drive operation is possible.

The camera back is designed to be easily modified to accept a "Polaroid" back, electrophotographic back, or any other nonconventional photographic process.

Other features include: a life counter, thermal overload and fiducial and film shrinkage markers.

The KA-9 Camera was developed through the combined efforts of the Signal Corps Engineering Labs and the Hycon Mfg. Company under Contract No. DA 36-039 sc 52583.

Sanitized Copy Approved for Release 2011/08/22 : CIA-RDP89B00487R000300650003-9