JPRS L/10354

26 February 1982

Translation

PLANNING AND DESIGN OF AUTOMATIC LONG-DISTANCE TELEPHONE EXCHANGES

By

Fanya Bentsionovna Bakaleyshchik

FBIS FOREIGN BROADCAST INFORMATION SERVICE

NOTE

JPRS publications contain information primarily from foreign newspapers, periodicals and books, but also from news agency transmissions and broadcasts. Materials from foreign-language sources are translated; those from English-language sources are transcribed or reprinted, with the original phrasing and other characteristics retained.

Headlines, editorial reports, and material enclosed in brackets [] are supplied by JPRS. Processing indicators such as [Text] or [Excerpt] in the first line of each item, or following the last line of a brief, indicate how the original information was processed. Where no processing indicator is given, the information was summarized or extracted.

Unfamiliar names rendered phonetically or transliterated are enclosed in parentheses. Words or names preceded by a question mark and enclosed in parentheses were not clear in the original but have been supplied as appropriate in context. Other unattributed parenthetical notes within the body of an item originate with the source. Times within items are as given by source.

The contents of this publication in no way represent the policies, views or attitudes of the U.S. Government.

JPRS L/10354

26 February 1982

PLANNING AND DESIGN OF AUTOMATIC LONG-DISTANCE TELEPHONE EXCHANGES

Moscow PROYEKTIROVANIYE AVTOMATICHESKIKH MEZHDUGORODNYKH TELEFONNYKH STANTSIY in Russian 1980 (signed to press 5 Mar 1980) pp 1-208

[Book "Planning and Design of Automatic Long-Distance Telephone Exchanges", by Fanya Bentsionovna Bakaleyshchik, Izdatel'stvo "Svyaz'", 10,000 copies]

CONTENTS

ANNOTATION

The design principles of automatic long-distance telephone exchanges using AMTS-3, AMTS-4, ARM-20, AMTS KE equipment and automatic switching centers are discussed.

The book is designed for engineering and technical workers engaged in the planning, design, operation and maintenance of automatic long-distance telephone offices.

FOREWORD

Building a national automatically switched telephone network is connected with building automatic long-distance telephone offices (AMTS) and automatic switching centers (UAK). During the development of modern automatic switching hardware, it has reached higher and higher quality levels, and telephone offices are being built with new capabilities and new switching and control principles.

The proposed book is the first attempt at a systematic discussion of the design principles of AMTS [automatic long-distance telephone offices] and UAK [automatic switching centers] of different types considering their interaction in the network. In the future, as the lastest equipment is developed and assimilated, appropriate supplements and improvements in the design procedure can be introduced.

The book is designed for specialists in the design organizations, the engineering and technical personnel operating the automatic long-distance telephone offices and also students in the advanced courses at the communications institutes and technical high schools.

The current instructions, design standards, and procedural developments of the "Giprosvyaz'" Institute and publications listed in the bibliography appended to this book were used when preparing the manuscript.

The author expresses his sincere appreciation to the reviewers, I. I. Vasil'yeva, R. A. Avakov, N. B. Pokrovskiy and V. I. Isayev for valuable suggestions to improve the contents of the book.

All suggestions with respect to the book should be addressed to: 101000, Moscow, Chistoprudnyy bul'var, 2, izdatel'stvo "Svyaz'."

The Author

INTRODUCTION

Intense development of the national economy of the Soviet Union, the growth of science, culture and standard of living of the Soviet people are accompanied by a significant increase in the volume of transmitted information. New types of information sources are appearing. There are higher requirements on speed and validity of information transmission. The unified automated communications system of the country (YeASS) is charged with unifying all information transmission means to improve the efficiency with which they are used. One of the component parts of the YeASS is the national automatically switched telephone network which will be built on the basis of unified engineering and operating principles and must provide high-quality telephone service throughout the entire country and provide for the transmission of digital data, phototelegraph and facimile traffic. This network will be based on continuously improved automatic switching hardware.

During the years of Soviet power, the telephone switching hardware, just as the communications branch as a whole, has come a long way in its development.

In prerevolutionary Russia there was no standard switching equipment for long-distance communications service. It was only in 1912, considering the peculiarities of servicing the zemskiy[1] telephone networks, that the L. M. Erikson plant in Petersburg began to produce individual switchboards of the MB system with drop signaling, the so-called "zemskiy type." These were the only standard switch boards which were used for a long time even after the revolution not only for small long distance telephone offices, but also offices in large cities.

During the first years after the October revolution, the switching equipment was worn out with completely exhausted capacities. The spare parts were exhausted, because foreign companies did not deliver them any more. The first Soviet long-distance switching centers were built in 1923 for reconstruction of the Petrograd MTS [long-distance telephone office]. In 1928 individual long distance switch boards of two types appeared: the TsB and MB systems. In the 1930's equipment was developed for the small-capacity type M-3 component offices and the medium-capacity type B and V offices. The indicated switchboards and offices were designed for the delay-basis service system. However, the development of the long-distance telephone network made it possible to begin the transition to a no-delay service system. The development of the composite system offices was interrupted by the war, and it continued later in the postwar years when the industry

---

[1] From zemstvo (elective district council in pre-revolutionary Russia).

began to produce the 120-channel MRU type offices and the 240-channel OU offices and also the M-49 individual switchboards.

At the beginning of the 1950's, a gradual transition began from manual switching to automatic. Industry began to build equipment for semiautomatic long-distance service with a two-frequency signaling system for the long-line service and simplified single-frequency equipment for semiautomatic telephone service of the AMSO-60-U type for the oblast-wide networks. After this, the first automatic long-distance telephone offices providing for the organization of outgoing automatic long-distance service on individual routings (AMTS-1) were developed and put into production. These offices were built on the basis of the two-frequency semiautomatic communications equipment using selectors of the ten-step system as the switching devices. Subsequently the AMTS-1 offices were modified and became widespread on the long-distance network of the country.

Further development of switching equipment for the long-distance telephone service led to the creation of new, improved high-capacity AMTS, the AMTS-2, and medium capacity AMTS-3 and also application of the ARM-20 type AMTS equipment (of Swedish-Yugoslavian production) manufactured in accordance with the operating requirements of the USSR Communications Ministry. Multiple crossbar connectors are used as the switching equipment in the AMTS-2, AMTS-3 and ARM-20 offices and relay markers are used as the control units.

In recent years the automatic switching equipment has undergone significant qualitative changes which have been accompanied by the introduction of electronic and magnetic elements and also computers as the control units. In the 1970's a new AMTS-4 mechanoelectronic system office was developed, and the production of the AMTS KE quasielectronic system was assimilated. Equipment has been developed for electronic type junctions and offices to create an integrated communications network.

Along with the development of switching equipment, the design engineering of long-distance telephone offices has also developed. The designs for the first large automatic long-distance telephone offices were developed in the Soviet Union under the direction of talented specialists M. A. Bednyakov and A. N. Verkhovskiy. Specialists of the TsNIIS [Central Scientific Research Institute of Communications] made a significant contribution to the development of the procedural design principles.

The expansion and reequipment of the existing long-distance telephone network on a new technical base require a significant volume of design work. A characteristic feature of this work is that the process of reconstructing the network under the conditions of the broad territorial expanses of our country will take place over a very long period of time while the network will be an inhomogeneous organism with different levels of development of individual component parts. Therefore when designing the offices of new systems it is necessary to take into account that they must be compatible with existing systems.

A modern automatic long-distance telephone office and automatic switching center are large communications enterprises equipped with a complex system of equipment. As a rule, special buildings are planned to be built for the AMTS or UAK.

The AMTS includes the following shops: automation and semiautomation; switching; technical servicing of the switching equipment; line equipment shops for local, long-distance and zone service; electric power supply and equipment and also input devices to the outside plant; auxiliary-production and administrative and general services.

The composition of the shops and services of the UAK is analogous to that of the AMTS except that the UAK does not have local service switching and line equipment shops. The problems of designing the line equipment shops, the electric power supply shop, the outside plant input devices are not considered in this book.

The buildings designed for the AMTS and UAK must correspond to special requirements and contain all forms of sanitary engineering and other devices insuring reliable operation of the equipment and normal working conditions for the service personnel.

When designing the AMTS and the UAK it is necessary to be guided by the official normative documents in effect while the design work is being done.

CHAPTER 1. AUTOMATED TELEPHONE SERVICE SYSTEM OF THE COUNTRY

1.1. General Remarks

The telephone system is one of the most complex component parts of the YeASS. The telephone service hardware is undergoing intensive development. Quasielectronic and electronic systems with programmed control are coming to replace the crossbar systems with register-marker control. Programmed control using specialized computers expands the operating capabilities of the offices and centers significantly. Along with intense development of telephony, digital data transmission systems and networks and also systems and networks for facsimile and phototelegraph transmission service are being developed.

Under these conditions the formation of the automated telephone service system of the country must be in accordance with unified principles providing for efficient use of the switching systems and high quality of telephone service to the national economy and population of the country. These principles must be taken into account when designing the telephone communications facilities.

1.2. National Automatically Switched Telephone Network

The national automatically switched telephone network built within the country includes automatic telephone offices, automatic switching centers, telephone channels, interoffice trunks and telephone sets. The purpose of the network is primarily to transmit telephone conversations, and on replacement of the telephone sets by special terminals, to transmit digital data with an average speed of up to 1200 baud, facsimile and phototelegraphic service.

The national automatically switched telephone network permits calls to be set up between any two subscribers in the country, including from hospital telephones, PBX [agency telephone exchanges] and also some coin telephones. These calls must, as a rule, be set up automatically. Connections giving the subscribers various services (information calls to obtain the telephone number of the called subscriber, leaving a message, calling the subscriber to a public call office, collect calls, and so on) will be set up semiautomatically.

The structure of the automatically switched telephone network and its structural principles are closely related to the unified numbering system. The zone numbering principle has been adopted in the USSR. Under this system the entire territory of the country is divided into seven-digit numbering zones. Within the seven-digit numbering zone are the following:

Local (city and rural) telephone networks;

Automatic long-distance telephone office servicing all subscribers in the zone with both intrazonal and long distance service (with subscribers from other zones);

Intrazonal network connecting the local networks in the zone to the AMTS.

For long-distance service each zone is assigned its own number -- the long-distance zone [area] code. Beginning with the defined number of zones, the long-distance zone code contains three digits. Thus, the long-distance number of a subscriber will consist of 10 digits (the three-digit zone code and seven-digit subscriber number within the zone), and considering the prefix for entering the long-distance network, the number is made up of 11 digits. (The numbering system and plan are considered in detail in § 1.7.)

The zone telephone network is part of the national automatically switched telephone network and is a system of intrazonal and local telephone networks located within the numbering zone. The intrazonal telephone network is a system of zone telephone centers and channel groups connecting them to each other and to the local telephone networks located within the AMTS numbering zone.

All of the AMTS located within the territories of the zonal networks will in the future be terminal offices of the long-distance telephone network. For tandem connections on the network, automatic switching centers are created which are not used for terminal connections. Thus, the long-distance telephone network is designed for service between the AMTS of different zones and includes the system of AMTS, UAK and channel groups connecting individual AMTS to each other, AMTS to the AUK and the UAK to each other.

In order to insure high quality of the speaking channel, the national automatically switched telephone network must be constructed in such a way that calls between two subscribers located at any points in this network will pass through no more than ten tandem switching stations as illustrated in Figure 1.1. This requirement imposes defined restrictions on the structure of both the long-distance and local networks. As is obvious from the diagram in Figure 1.1, on the long-distance network a call can pass through no more than four UAK, and a local rural network must have only a two-link structure (terminal station OS -- junction center US and central office TsS) or single-link structure (OS -- TsS) if a zone telephone center is organized in the zone network.

Let us consider the structural principles of the long-distance, intrazonal and local networks in more detail.

1.3. Structure of the Automated Long-Distance Telephone Network

The high cost of the automated long-distance telephone network facilities requires that the design of these facilities be based on principles permitting achievement of their highest use with high service quality with minimum possible expenditures.

The structural diagram of the long-distance telephone network is selected beginning with the statistical properties of the telephone traffic, and the power of the communication channel groups is calculated as a function of the call demand. The

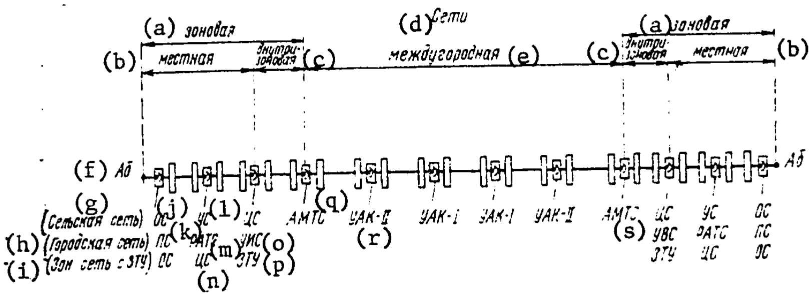

Figure 1.1. Diagram of long-distance automatic telephone subscriber service with a maximum number of switching sections.

Key:
a. zone
b. local
c. intrazonal
d. networks
e. long-distance
f. Ab = subscriber
g. (rural network)
h. (city network)
i. (zone network with ZTU)
j. OS
k. PS
l. US
m. RATS
n. TsS
o. UIS
p. ZTU
q. AMTS
r. UAK-...
s. UVS

statistical structure of the traffic is such that high use of the lines is inversely proportional to high service quality, that is, the higher the line load in a group, the greater the losses of calls as a result of a shortage of available lines.

In order to obtain a well-used network and insure high service quality at the same time it turned out to be expedient to construct networks with organization of direct and bypass or alternative routings. The direct high-use channel groups are organized between the AMTS which have sufficient uniform gravitation, that is, the total incoming and outgoing traffic on the channel groups is no less than 8-10 Erlangs. In the general case these channel groups service from 70 to 90% of all traffic. The "excess" traffic not serviced by the direct groups (10-30%) is routed to the called office over alternative paths through the automatically switched tandem centers. As a rule, it is uneconomical to organize direct channel groups between AMTS with small uniform gravitation, that is, with a total load of less than 8 Erlangs, and calls between such AMTS are set up only through the UAK.

Two classes of tandem centers are organized: UAK-I and UAK-II. The main centers are UAK-I which are connected to each other by the "each to each" principle by channel groups of sufficient capacity (no less than 36-48 channels) on each routing. Each UAK-I is connected to several UAK-II, and the latter, to the AMTS.

Figure 1.2 illustrates the structural principle of an automatic long distance network with direct and bypass paths. The shortest (direct) path AF is the basic path when setting up calls between two AMTS (A and F). All the remaining paths AEF, ABEF, ABDEF, ABCDEF -- are bypass routings to which the excess traffic not serviced by the direct path goes. In addition to the basic path up to 4 alternate paths are provided. The longest alternative is the last-choice path (ABCDEF), because it is the last choice if the basic path and all the shorter bypass routings (with a smaller number of tandem connections) are busy. Calls can be set up through no more than two centers of one class on the alternative trunking.

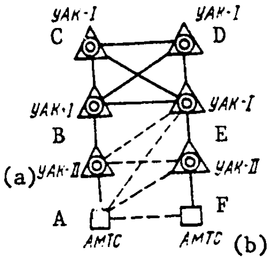

Figure 1.2. Structural principle of the long-distance telephone network.

Key: a. UAK-... b. AMTS

All the channel groups, except the last-choice path, can be calculated for large losses (P = 0.1 to 0.3) in order to insure high use of these channels. However, this is not felt in the quality of servicing the subscribers because all of the calls not set up over the high-use paths will be set up on the last choice paths which are designed for small losses (P = 0.01). Consequently, with this structure of the network, high carrying capacity (as a result of the high-use paths) and high service quality (as a result of the last-choice paths) are insured.

From Figure 1.2 it is obvious that on the long-distance network a call is set up through no more than four centers, that is, it goes through no more than five switching sections. This solution arises from the general requirement that in the entire switched network of the country a call not consist of more than 11 switching sections (see Figure 1.1).

During the initial period of creating the national automatically switched telephone network, the UAK have still not been built, their functions are left to the AMTS which will be the terminal-tandem offices.

1.4. Structure of Intrazonal Telephone Networks

Local (city and rural) telephone networks and automatic long-distance telephone offices servicing all subscribers of the zone with intrazone, long-distance and also international service are located within the territory of a seven-digit numbering zone. The sizes of the zone territories are selected calculating that the long-distance subscriber numbering will remain unchanged for a sufficiently long time in the future -- on the order of 50 years. Thus, the total capacity of the local telephone networks within the territory of a zone should not exceed the possibilities of the seven-digit numbering by the end of the given period. Beginning with this fact, the maximum prospective capacity of the local zone networks is 8 million numbers (two million out of 10 possibilities are dropped from this capacity as a result of the fact that the first two digits, namely 8 and 0, of the local number are taken as prefixes to enter the long distance network and for special services).

When defining the zone boundaries, an effort to decrease expenditures required to organize the zone network was also considered. In this respect it is economically expedient that a significant part of the traffic in the network be completed within the zone boundaries. Accordingly, in the majority of cases the zone boundaries match with the administrative oblast, kray and republic (without oblast division) boundaries where the predominate part of the traffic is communications between administrative center and the rayon organizations subordinate to it. In some oblasts, krays and republics, beginning with the prospective telephone capacity and also considering geographic and other features of the territory, two zones are organized in each (in individual cases, three).

One or several AMTS are established within the territory of each zone. The first AMTS is located in the administrative center. The expediency of the presence of several AMTS in the zone each servicing its own group of local networks is determined on the basis of feasibility studies of versions of the structure of the zone network with one or several AMTS. The points at which the AMTS are located (except one in the administrative center) can be cities having significant uniform gravitation to other zones.

In the presence of large cities or rayon centers within the territory of a zone which are independent centers of uniform gravitation of a group of rayons, zone telephone centers (ZTU) can be organized at these points. The given centers connect the local networks of the zone gravitating to each other and provide for connection of them to the AMTS. The organization of zone telephone centers is economically expedient only if a significant portion of the traffic (no less than 50%) is completed within a given group, which insures significant reduction of the number of lines directed toward the AMTS. Long-distance service is provided through the zone centers and AMTS of the zone. The local telephone networks of the rural type included in the zone center must have single-stage structure of the OS-TsS type, which is necessary to satisfy the norm with respect to number of switching sections in a channel of the long-distance telephone subscriber service. Potentially, each zone center can be converted to a zone AMTS by connecting long-distance channels to it and expanding its capacity to the required degree.

The lines (channels) of the intrazone network from local networks to the AMTS are called recording trunks (ZSL), and in the opposite direction, long-distance trunks (SLM). Each local rural telephone network is connected by these trunks through the TsS to the nearest (base) AMTS or ZTU. All forms of service are provided over the ZSL and SLM: intrazonal, long-distance and also communications with AMTS services. The structural principle of an automatically switched network within the territory of a zone is illustrated in Figure 1.3 when there is one AMTS and one ZTU in the zone.

In the presence of several AMTS in a zone, communications between them are realized by the "each-to-each" principle. Each TsS (or ZTU) is connected to its base AMTS, and in the presence of uniform gravitations, to other AMTS and ZTU of the zone. From the point of view of constructing the long-distance network, all the AMTS located within a zone are equivalent and are joined to other AMTS in accordance with the structural principles of the long-distance telephone network. Here it is considered that only one AMTS of the zone participates in an outgoing long-distance call The structural principle of the automatically switched telephone network within a zone is illustrated in Figure 1.4 where there are several AMTS in the zone.

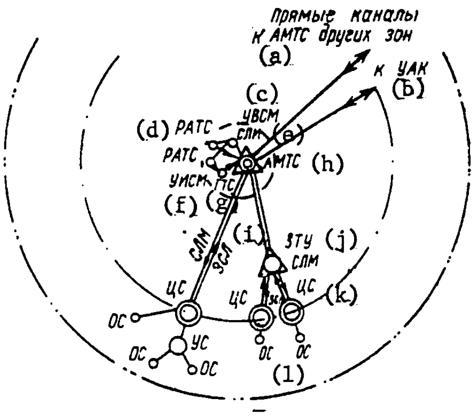

Figure 1.3. Structural principle of a zone network with one AMTS and one ZTU: ——— long-distance network channels; ═══ the same, intrazonal telephone network; -·- GTS boundary; -··-·- the same, intrazonal network; -··-··- the same, zonal network.

Key: a. direct channels to the AMTS of other zones
b. to the UAK
c. UVSM
d. RATS
e. SLM
f. UISM
g. GTs
h. AMTS
i. ZSL
j. ZTU
k. TsS
l. OS

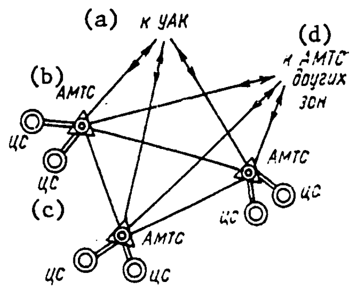

Figure 1.4. Structural principle of a zone network with several AMTS.

Key: a. to the UAK
b. AMTS
c. TsS
d. to the AMTS of other zones

The central offices of local rural telephone networks are located, as a rule, in the rayon centers where the long-distance offices providing the subscribers of the rayon with long-distance telephone service are located. The transition to the automatic (zone) service means that ATS subscribers in the rayon will be able to be connected over the ZSL and SLM directly through the ATS TsS and the AMTS, bypassing the rayon center MTS by dialing the long-distance number. Accordingly, as the automatic (zone) communications develop, the functions and, consequently, the volume of indicated MTS will be reduced to a minimum required for servicing only the types of calls which cannot be set up automatically.

During the initial period of development of zone telephone networks, the local network automation level will be different in different rayons of one zone. On the fully automated local networks the ATS subscribers are able to have outgoing and incoming service (long-distance and intrazonal) automatically via TsS and AMTS over the ZSL and the SLM. On partially automated local networks where in addition to the ATS, there are still manual telephone offices RTS, the ATS subscribers obtain service automatically, and the RTS subscribers enter the long-distance network by the outgoing semi-automatic service channels through the MTS equipment of the rayon center. The subscribers of unautomated rural networks receive long-distance service over the semiautomatic and manual service channels via the switching equipment of the rayon center MTS.

Automatic outgoing intrazonal and long-distance service are realized via the IGT subscriber patch cord of the local telephone offices over the ZSL, obtaining a dial tone after dialing the prefix to enter the AMTS. For incoming service, the long-distance patch instruments of the local ATS and SLM are used.

For intrazonal, long-distance and international automatic service, the number and category of the calling subscriber are determined automatically. The local networks must be equipped with equipment for automatic determination of the number and category of the calling subscriber AON. The organization of automatic service by the method where the subscriber placing the call dials his own number is permitted temporarily. On rural networks only a single method of determining the number of the calling subscriber should be used both for the TsS subscribers and for the OS and US subscribers of the given rural network.

Considering that the transition to automatic service in the zone is taking place gradually, provision is made for the possibility of organizing entry to the AMTS by the telephone operators of the rayon center MTS both over the common ZSL group with the subscribers and over a separate long-distance channel group.

Provision is made for links between operators between all the AMTS and UAK of the long-distance network and also between the AMTS and ZTU of the zone. For this purpose, order-circuit ATS have been installed at all the AMTS, UAK and ZTU. The connection between the order-circuit ATS entering into the AMTS of different zones will be realized over ordinary long-distance channels without allocation of special lines. The subscribers of the order-circuit ATS are the maintenance and engineering-technical personnel. No provision is made for communications between the public network subscribers and the order-circuit ATS subscribers.

1.5. Structure of City and Rural Telephone Networks

City telephone networks, depending on their capacity, are divided into the following types:

1. Nonregionalized telephone networks. These include networks having only one ATS. The rated capacity of such networks does not exceed 8000 numbers; the subscriber numbering is four-digit.

2. Regionalized telephone networks without junction formation. On these networks there are several rayon ATS, the total rated capacity of which does not exceed 80,000 numbers. Calls are set up between these ATS by the "each-to-each" principle. The subscriber numbering is five-digit.

3. The regionalized telephone networks with incoming traffic junctions. These networks consist of several hundred-thousand junction districts, with a rated capacity of no more than 80,000 numbers each. The connections between offices within the junction district are made by the "each-to-each" principle or through a center, and connections with offices of other junction districts, through the incoming service centers UVS. The total rated capacity of the network does not exceed 800,000 numbers. Subscriber numbering is six-digit.

4. The regionalized telephone networks with incoming and outgoing service centers are being built on the basis of 100-thousand junction districts which are combined into million groups. The connections between the offices of the different junction districts of the network are made via the outgoing service center UIS, selecting the million group, and via the incoming service center, selecting the corresponding hundred-thousand subscriber group. The total rated capacity of the network does not exceed 8 million numbers. The subscriber numbering is seven-digit.

For outgoing long-distance service, each rayon ATS of the city telephone network is connected to AMTS via the ZSL. Depending on the total capacity of the city network and the territorial location of the rayon ATS, the ZSL can be routed to the AMTS either by a direct group or via a long-distance outgoing service center UISM. In the case of direct service, network centers (UZSL) with or without mixing selectors [hunting switches] can be organized. The choice of the version of organizing the ZSL is substantiated by engineering economic calculations when designing the networks. The incoming long-distance service to city network subscribers is provided over the SLM via the incoming long distance service centers UVSM.

The primary method of coupling the ATS to the AMTS over the ZSL is coupling without intermediate senders. The latter are used only for coupling to the AMTS-2 and AMTS-3 offices.

The telephone networks of nearby suburbs are part of the city networks. The remote suburb networks are also being gradually included in the city telephone networks by the principle of rayon or agency networks. For service to remote suburbs included in the city telephone network, a rural-suburban outgoing and incoming service center has been organized in the network.

On rural telephone networks (STS) either the radial structure is used by which the rural terminal telephone offices (OS) are coupled directly to the rayon center telephone office (TsS) or radial-junction structure by which the OS are coupled to the junction centers which, in turn, are connected to the TsS of the rayon center. The central office of the STS located, as a rule, in the rayon center, is simultaneously a city telephone office of the rayon center. Depending on the structure of the STS, the TsS equipment includes trunks from the US or from the OS.

The junction centers US are located in the populated areas of the rural district which are centers of uniform gravitation of the nearby offices. The US equipment includes trunks from several OS joined by this center, and a common SL group to the TsS.

The terminal offices OS are located in all of the rest of the populated areas in the rural district. The trunks from the OS, depending on the structure of the STS network are routed either to the US or to the TsS.

The necessity for organizing junction centers in the STS is substantiated by feasibility studies when designing the STS. In the STS which are included in the zone telephone junctions, the structure of the STS can only be single-step (OS-TsS).

The interoffice trunks of the STS are common to local and long-distance service. Both outgoing and incoming long-distance calls are made over these lines. All of the long-distance calls of STS subscribers are made via the TsS independently of the method of setting up the long-distance call (automatic, semiautomatic or manual). In the case of automatic long-distance and intrazonal service, the corresponding matching systems for connection to the AMTS are installed at the rayon center TsS. The type of system is determined by the type of line and the signaling system.

1.6. Communications with Departmental Telephone Offices and Mobile Units

Departmental telephone offices located within cities and rayons are connected to the local telephone networks by the agency's telephone service system. The subscribers of the departmental telephone offices having the authority to enter the public network, are granted long-distance and intrazonal telephone service just as ordinary local network subscribers under the condition of installing AON equipment at these departmental offices. If necessary, some number of departmental office subscribers can be given priority, that is, priority service on the long-distance and zonal networks in the case of overloads or other unfavorable situations on the network.

Departmental telephone networks can be connected to the AMTS with zone privileges and assignment of the long-distance code ABC or with hundred-thousand center privileges and assignment of the intrazone code ab. Calls are set up over the long-distance channels or over the ZSL and SLM.

Communications with mobile units -- passengers on trains, river and ocean-going vessels, interurban buses, aircraft, motor vehicles and various moving machinery used in the national economy -- is organized by various radio telephone and switching equipment Radio telephone service between mobile units and also between mobile units and public network subscribers is provided using the ARS subscriber radios and central radios TsRS with switching and radio equipment systems. For individual mobile service systems, mobile service switching centers UKPS are organized through which the zonal and long-distance networks are accessed.

1.7. Long-Distance Numbering

In accordance with the numbering rules adopted in the USSR, the entire country is divided into seven-digit numbering zones. When setting up calls within a zone the subscriber must dial a seven-digit number of the abxxxxx type. In this number the first two digits (ab) are the intrazonal code which is assigned to the rural network of the rayon or city network with less than 100,000 subscribers or the 100-thousand rayon of larger city telephone networks. The remaining five digits are the local number of the rural or city network or the 100-thousand rayon of the city network. Only eight digits out of the possible ten can be used as the first digit of the seven-digit number (a): "0" and "8" cannot be used for subscriber numbers because the special services numbers (01, 02, 03, and so on) begin with "0," and "8" has been selected as the prefix for connection to the AMTS. Consequently, the number of subscribers in the zone cannot exceed 8 million numbers.

For long-distance service each zone is assigned a three-digit long-distance area code of the ABC type. The long-distance number of a subscriber will therefore contain ten numbers: ABCabxxxxx, and considering the prefix for connection to the AMTS "8," it contains 11 digits. For service within the zone instead of the ABC code, the prefix "2" is used. Thus, when setting up a call to a subscriber in another zone, the subscriber must dial a number of the type 8ABCabxxxxx, and for service with a subscriber in his own zone, a number of the type 82abxxxxx. In this case, after dialing the prefix "8," the subscriber will hear a buzzing dial tone.

When calling the subscribers of a city telephone network (GTS) of an oblast center where there are no AMTS, it is temporarily permissible to supplement the local subscriber number with zeros to make it a seven-digit number. For example, when calling the subscriber with a five-digit number, the number ABC00xxxxx is dialed.

The subscriber is connected to the long-distance service telephone operators of the AMTS in the case of manual and semiautomatic service after dialing the following digits: 811...818, where 11...18 are the two-digit codes for long distance services.

Subscribers of mobile units connected directly to the AMTS are called by dialing the following numbers: in the case of long-distance service 8ABCabxxxxx, and in the case of intrazonal service, 82abxxxxx where the special code "90" is allocated as the ab. This code denotes access to the mobile service networks.

In the case of service traffic between the AMTS and UAK, the subscribers of the order-circuit ATS dial a number of the type 8ABC0$x_1$xxx where ABC is the [area] code of the zone within which the called order-circuit ATS is located; x_1 is the order-circuit ATS code; xxx is the number of the order-circuit ATS subscriber. For communications with order-circuit ATS subscribers inside the zone, a "1" is dialed instead of ABC.

In order to obtain automatic international service, the subscriber must dial "810" and the international subscriber number of the called country. The subscribers are connected to the service telephone operators of an international office with manual or semiautomatic service after dialing 819x, where 19 is the prefix accessing the international service, and x is the prefix accessing a defined language group or other services. The ABC codes have been assigned to all international offices for accessing the international offices of a country over the long-distance channels of the national network.

Special three-digit ABC codes -- 441-444, 440 -- have been allocated for connection to various types of monitoring and testing devices included in the AMTS and UAK.

The unified numbering system developed for the entire country imposes defined requirements on the local telephone network numbering system. Closed numbering of public telephones must be used in the GTS. The number of digits of the subscriber numbers will in this case depend on the network capacity, that is, the number of telephones included in the given network. The GTS capacity is determined by the number of PBX ATS subscribers (having the privilege of connection to the GTS) and the suburban ATS. The city telephone networks must have large reserves of numbering capacity because of unavoidable losses in the numbering. The use coefficient of the number capacity will be approximately 60 to 70%.

In individual cases the number of the city network is selected not only beginning with the network capacity, but also considering the specific conditions connected with the network configuration. In such cases the choice of the number of digits in the number is substantiated by engineering-economic calculations.

In the GTS, each rayon ATS joins a 10-thousand group of subscribers. The subscriber number is formed from the intraoffice four-digit number and the rayon ATS code. The local subscriber number is part of the seven-digit zone number abxxxxx. In the case of seven-digit local numbering, the local and zone numbers coincide, and the rayon ATS code will in this case consist of three digits abx. According to the long-distance numbering plan, each GTS is allocated as many intrazonal codes ab as full or incomplete 100-thousand groups in the GTS considering its 50-year development.

In cities with regionalized telephone network which are simultaneously rayon centers of rural rayons, rural-suburban GTS centers are organized which also perform the functions of the rural network TsS. The numbering of the rural subscribers is included in the GTS numbering. For access to the AMTS, the rural network subscriber dials the TsS access prefix; then after receiving the dial tone he dials an "8" for access to the AMTS.

On the rural telephone networks the numbering must be constructed in such a way that any connections from the rural rayon TsS to the subscribers of other offices of their rayon are realized on the basis of information about five digits of the interoffice number of the called subscriber. This is needed to match the rural numbering with the zone and long-distance numbering. Any rural network subscriber must be given the possibility of connection to the special services of the rayon center and accessing the AMTS over the ZSL. The closed five-digit numbering can be used on networks equipped with ATS K-100/2000 type rural offices having five-digit subscriber senders On the remaining rural networks open numbering can be used in which the intraoffice number depends on the capacity of the ATS and can contain from two to five digits. Interoffice service is realized in this case by dialing five-digit numbers which are formed by adding the ATS code to the intraoffice number. In all cases the TsS subscribers call any network subscriber by dialing a five-digit number. The AMTS are accessed by dialing the prefix "8." Each rural network is assigned an intrazonal code ab which, together with the five-digit number of the rural network subscriber forms a seven-digit zone number.

To implement the numbering system, a long-distance numbering plan for zone networks within the territory of the USSR has been adopted. The plan defines the values of the ABC codes for all zones. The distribution of the ABC codes is made considering the network development over a 50-year period. Inasmuch as changes in administrative division, telephone gravitation distribution, network capacity, and so on can occur over this period, sufficient reserves have been left in the ABC code numbering. Within the territory of certain administrative units (oblasts, krays and republics)where the proposed network capacity will exceed the possibilities of one zone (or there are other specific conditions), the plan calls for creation of a second zone in the future, and in individual cases, a third zone, for which the corresponding ABC codes are reserved.

The long-distance numbering plan is presented in appendix 1.

1.8. Communication with International Offices

The entire territory of the world has been divided into several switching zones -- "telephone continents." At the load center of a "telephone continent," an ST-1 type international telephone office has been installed which is a first category office and must be provided with all forms of international intercontinental service. The range of this international office is the ST-1 switching zone.

In the switching zone, in addition to the first category offices there are second (ST-2) and third (ST-3) category international offices. In contrast to the ST-1, the ST-2 and ST-3 offices can not have intercontinental types of communications. The range of the ST-2 can be limited to the territory of one country. In countries with a very large territory there can be several ST-2 zones, and sometimes the ST-2 zone joins several countries. As a rule, the range of the ST-3 is limited to the territory of one country.

The ST-1 international offices are joined to each other by the "each-to-each" principle. For coupling the ST-1 to the ST-2 and also the ST-2 to all the ST-3 of its switching zone, the number of channels must insure high service quality, that is, be designed for low loss level. The number of channels for coupling the ST-1 to the ST-2 of another switching zone must be designed for high use of them.

The boundaries of the switching zones on putting the new international telephone offices ST-1, ST-2 and ST-3 into operation can vary depending on the nature of the international exchange traffic distribution.

The International Telephone and Telegraph Consultative Committee (MKKTT) has developed a world numbering system for a global automatically switched telephone network. This system takes into account the characteristic features of the long-distance telephone networks of the various countries and, at the same time, corresponds to the general structural principles of the world network. In order to assign the various countries an international code, the territory of the world has been divided into numbering zones. Each of these zones is assigned a single-digit code: "1" -- North and Central America (without Cuba); "2" -- Africa; "3" and "4" -- Europe; "5" -- South America and Cuba; "6" -- Asia Minor, Australia, Oceania; "7" -- the USSR; "8" -- Central Asia and the Far East; "9" -- India and the Near East.

In each of the indicated zones the countries are assigned one, two and three-digit codes, the first digit of which is a single-digit zone [area] code. Here the number of digits in the international number must not exceed 11 (in the future, 12). In accordance with this principle the countries or regions with ten-digit long-distance subscriber number are assigned single-digit codes (the USSR -- "7"; USA, Canada, Mexico -- "1"), the countries with nine-digit number are assigned two-digit codes (for example, the majority of countries in Europe), and the countries with eight-digit numbers, three-digit codes.

For outgoing automatic international service the subscriber must dial the AMTS access prefix "8" and, receiving a dial tone from the AMTS equipment, the prefix for accessing the automatic international network "10," and then the complete international number of the called subscriber. When calling subscribers on the long-distance network of the USSR, the subscribers of other countries must dial a number of the type 7ABCabxxxxx.

One ST-1 international telephone office, which is the center of the telephone continent of Eastern Europe, is installed in Moscow. In addition, in the future the installation of several ST-2 international offices is possible within the national network of the USSR.

The ST-1 international office will be connected by direct paths to all of the TS-1 offices of other telephone continents and all the ST-2 offices of our country and other countries entering into the telephone continent of Eastern Europe. The ST-2 offices will be connected with the international ST-1 of other telephone continents and with the ST-2 offices of their own and other telephone continents, to which there is sufficiently great uniform gravitation. The installation of international offices ST-3 within the territory of the USSR is not planned.

The territory of the Soviet Union is divided into operating zones of the international office. In each such zone an international office ST-1 or ST-2 is installed which is the base office for accessing the international network. In order to insure the required service quality, the number of switchable sections in the international connection channel to the base international office must not exceed six. It is proposed that the outgoing AMTS be coupled to the base international office over direct paths or via automatic switching centers. In this case each international office is assigned an international ABC code by the numbering plan.

Information about an international connection (the international number of the called subscriber and the national number of the calling subscriber -- 22 digits) will be recorded in the international register of the outgoing AMTS. For analysis of the long distance code of an international office, the plan calls for using the register-decoding equipment of the AMTS and UAK for connection with the base international office. The international number on the national network will be transmitted to the international office without analysis after setting up the call It is proposed that the rate will be set for calls at the outgoing long-distance office.

The incoming international traffic goes through the international channel network to the international offices ST-1 and ST-2 of the USSR. For incoming automatic and semiautomatic international service the information about the number of the called subscriber (the national number of the USSR subscriber consists of ten digits -- ABCabxxxxx) is transmitted to the incoming international sender of the ST-1 or ST-2 office. The international office sender together with the decoder, analyzing one, two, three or five of the first digits of the national number of the called subscriber determines the path over which the call will be routed through the territory of the country. If the incoming international call has reached the base international office, it is routed to the incoming AMTS over direct paths or via automatic switching centers. If the incoming international call has not reached the base international office, then it is routed to it over the international channel network and then to the incoming AMTS.

Special auxiliary equipment will be installed at the AMTS for communicating with the international offices.

1.9. Types of Office and Center Equipment

The equipment of the offices and centers in the national automatically switched telephone network must correspond with respect to its basic operating and technical capabilities to the basic requirements of the system of this network. In particular, in the offices and centers of both long-distance and local networks switching of the telephone channels must be provided not only for transmission of telephone calls, but also digital data, facimile and phototelegraphic service. Long-distance telephone calls must be set up with priority for subscribers of individual categories. If the direct service paths are busy, provision must be made for the possibility of automatic switching of the call to bypass routings. The methods of transmitting line and control signals and also the switching and control unit systems of the offices and centers must take into account high quality of the talk channel and minimum call setup time.

These and other system requirements are satisfied in the equipment of the following types: AMTS-4 and UAK of the mechanoelectronic system; ARM-20 type AMTS of the crossbar system; AMTS KE and UAK of the quasielectronic system.

The AMTS-2 and AMTS-3 type offices of the crossbar system are also in operation on the long-distance network. Although they do not correspond to all the requirements of the national automatically switched network, they provide for automation of the long-distance service in its first stages. The initial phase of organization of automatic long-distance telephone service on individual routings is realized using the AMTS-1M equipment of the ten-step system which will be replaced later.

All of the indicated types of AMTS and UAK (except the AMTS-1M) will operate on the network jointly for a long time.

The development of local telephone offices in the near future will take place on the basis of crossbar equipment -- improved ATS KU for the city networks and the K-100/2000 ATS for the rural networks. A significant number of ten-step ATS are in operation. The quasielectronic ATS is a prospective system.

1.10. Methods of Transmitting Line and Control Signals

The following procedures are recommended on the long-distance telephone network for transmitting line signals:

single-frequency on a frequency of 2600 hertz (AMTS-4 and ARM-20);

a common signaling channel OKS (AMTS KE);

two-frequency on frequencies of 1200 and 1600 hertz (AMTS-1M), AMTS-2, AMTS-3, semiautomatic service equipment).

The following methods of transmitting line signals are used on the intrazonal networks:

battery (over physical three and four-wire lines);

frequency on a 2600 hertz frequency;

frequency on 3800 hertz over the allocated signal channel;

over a common signaling channel (ATS E).

The following procedures are recommended for transmitting control signals in the long-distance and zonal networks:

multifrequency on frequencies of 700, 900, 1100, 1300, 1500 and 1700 hertz (AMTS-4, ARM-20);

over a common signaling channel (AMTS Ke);

ten-step method (for communications with the AMTS-2 and AMTS-3 and for operation with the ten-step ATS).

Sound signals are transmitted in the form of buzzer signals and recorded voices.

The signal systems are discussed in more detail in [4].

CHAPTER 2. PLANNING AND DESIGN PROCEDURE, COMPOSITION AND CONTENT OF DESIGN MATERIALS

2.1. Research

The construction of the AMTS (UAK) facilities requires significant capital investments; therefore the design of the system must be based on feasibility studies confirming the necessity and economic expediency of building a new AMTS for a given city. The purpose of the feasibility studies (TEO) is also the development of technical designs insuring high quality of service and the greatest cost benefit from building the office considering the maximum possible use of existing facilities.

For development of the TEO, research work is done at the construction site for the proposed AMTS. The purpose of this research is preparation of initial data required to design the AMTS. A composite group of specialists in different areas (switching equipment, transmission systems, power supply and electric power, line, civil construction, and so on), each of which studies and prepares material in his area, is sent to research the proposed construction site. In particular, the civil construction specialist studies the problem of the facilities for the future AMTS -- the possibility of using available facilities or the necessity for building a new building. In the latter case, the investigator solves the problem of selecting the site for the building and other problems connected with it together with the local organizations.

When selecting the building site, the primary criterion must be minimum expenditures on constructing service lines. The best version from this point of view is a site directly adjacent to the existing MTS building. In this case, technical solutions using existing equipment for joint operation with the new office become the most economical also.

The investigation with respect to the switching shop has the purpose of preparing initial materials for calculating the AMTS equipment for the future period and also for solving the problems of organizing the coupling of the designed office to the local telephone networks and other facilities within its city and zone for the same period. In addition, during the investigation it is necessary to study and prepare data for determining the capacity and structure of the designed AMTS for the period of its introduction into operation considering provision for switching channels and conversion to the new service system without interfering with existing service.

The initial materials for calculating the office equipment or the indices characterizing the long-distance telephone traffic of the given city. The basic statistical data on the annual traffic on each routing the concentration factor, the average call length, the average number of attempts to set up one call are initially used when calculating the long-distance traffic during development of the master plans for development of long distance and intrazonal networks. For calculating the AMTS equipment these data must be supplemented by analysis of the uniform gravitation distribution, that is, the percentage ratio of the traffic flows from different sources to different groups of outgoing routings.

The following traffic flows are created at the AMTS:

1) from the GATS subscribers of its city to the STS subscribers of its zone and other zones;

2) from the STS subscribers (through the TsS) of the rayon of its zone to the subscribers of other rayons of its zone, the GATS and other zones;

3) from the subscribers of other zones to the GATS subscribers, STS subscribers and subscribers of other zones (tandem calls).

The traffic coming from each of these three source groups is provisionally taken as 100%. On the basis of analyzing statistical data, the proportion of the traffic falling in each group of outgoing routings is discovered.

In order to develop design solutions with respect to organizing the startup system of the designed AMTS, the investigation materials must include a list of all routings of the long-line (long-distance) and intraoblast (intrazonal) service included in the existing MTS, with indication of the number of channels on each routing and the method of servicing them and also indication of the amount of immediate development for the period before starting up the AMTS. Data on the composition and state of existing equipment, the system for organizing communications with local telephone offices and other facilities are needed for the same purpose.

All the documents included in the survey materials are compiled by defined united forms, and they are checked by responsible workers of the investigated long-distance office. The detailed composition of the materials, the forms for the documents and instructions for filling them out are contained in the effective instructions for performing the investigations and surveys developed by the "Giprosvyaz'" Institute. The survey materials are put together in a separate volume which is stored in the design organization archive.

2.2. Feasibility Studies

After studying the survey materials and the calculated data of the master plans for development of the long-distance and intrazonal networks defining the prospective and installed capacity of the AMTS, the possible versions are investigated with respect to types of construction: expansion of the office in the existing building, construction of an annex to the existing building or construction of a new building for the AMTS. In order to select the optimal version, a comparative analysis is made of the technical solutions with respect to these versions considering the prospects for development and also a comparison is made between their indices. By the comparison results the optimal version is selected and substantiated which insures the best quality of technical solutions and the most effective economic indices.

With respect to the switching shop, the type of equipment for the designed AMTS is selected and substantiated on the basis of data on the installed and prospective capacities of the AMTS. In order to make feasibility comparison of the versions, preliminary consolidated calculations of the office equipment for installed and prospective capacity are performed, the list and sizes of the engineering and production facilities of the switching shop are determined. In order to determine the total capacity and sizes of the areas for electric power plants, a preliminary calculation of the current intake to power the office equipment is made.

In the TEO [feasibility study] stage, a study is also made of the expediency and possible versions of using the equipment of the existing MTS either for joint operation with the new AMTS or for inclusion of the existing equipment (completely or partially) in the new AMTS. Simultaneously the possible versions of organizing communications with local telephone networks and other facilities are considered. As a result of the feasibility comparison of the investigated versions, the optimal structure of the designed AMTS is selected.

After approval of the TEO materials and conclusions by the USSR Ministry of Communications, they become the initial documents for developing the AMTS design. The design process can take place either in one phase (contract-detail design) or in two phases (contract design and detail drawings), depending on the size and complexity of the facility. The staging of the design development is established by the design assignment.

2.3. Composition and Content of the Design

The purpose of the design is a concise discussion and substantiation of the technical solutions with respect to creating the AMTS (UAK) facilities, definition of the composition and the quantity of all types of equipment and materials for ordering from industry, determination of the cost of the facilities and their cost benefit, development of different diagrams, tables, drawings and other materials required to perform the construction and installation operations.

The explanatory note to the design includes the following:

the decisions made are briefly formulated with regard to selection of the type of AMTS, its prospective capacity, for which the size of the building and installed capacity are calculated (with a table of the number of channels and traffic on the routings of the long-distance and intrazonal networks appended), with respect to the structure of the office, organization of its communications with local city and rural telephone networks and other facilities (with a structural diagram of the office and service organizational schematics appended), and with respect to method of using the equipment of the existing MTS;

results are presented from the complete and precise calculations of the office equipment (the calculation itself can be not appended to the design but stored in the design organization archive);

brief explanations are presented on the peculiarities of the arrangement of the equipment considering prospects for the development of the office (with equipment placement plans appended);

solutions are formulated with respect to organizing the construction of the startup system providing for putting the new AMTS into operation without interfering with existing service (with the switching diagrams and plans appended);

results are presented from a precise calculation of the current consumption to run the equipment (on each routing) required to design the electric power plant and also for calculating the current distribution network of the office;

recommendations are made with respect to organizing the technical maintenance, and results are presented for calculating the number of technical personnel.

In order to determine the office cable consumption required to install the office equipment, cable connection tables are compiled on the basis of equipment functional and wiring diagrams. These tables indicate the laid sections of cables, their lengths and the locations where the ends are connected. Simultaneously with the cable tables, circuit diagrams are developed for the cables to equipment of all types. The arrangment of the cables included in the intermediate distributing frames IDF, is depicted on the front view drawings of these panels.

A detailed list of design materials and the procedure for filling them out are regulated by the effective standards developed by the "Giprosvyaz'" Institute.

When compiling the design materials it is necessary to consider the following fact. The process of intensive development of switching equipment occuring at the present time is accompanied by a significant number of new concepts and terms. In order to avoid different interpretations of the same concepts, special all-union state standards have been developed for terms and definitions [1, 2]. The technical terms used when compiling the text and graphic materials of the design must correspond strictly to these all-union state standards. In naming the diagrams it is necessary to adhere to the classification indicated in All-Union State Standard 2.701-68. In this document it is recommended, for example, that the term "structural diagram" be used in place of the previously used "block diagram." Another recommended term "functional diagram" corresponds to the type of diagram on which defined processes occurring in individual functional circuits are illustrated (for example, the relay response circuit connecting two devices together). The term "general diagram" is used for a simplified representation of the component parts of the system joined together at the operating location.

2.4. Lists and Estimates

A necessary part of a design is the documents for ordering equipment and the estimates defining the cost of acquiring and installing this equipment. The indicated documents are filled out in two forms:

the order specifications designed for placing orders for equipment, the manufacture of which will take a long time;

lists compiled by the consolidated nomenclature for the remaining equipment, including general office, imported and nonstandardized devices, fittings, cable and other products in mass and series production.

The order specifications and lists are compiled on the basis of calculating the equipment and cables, and they contain a complete, detailed list of all elements of the equipment and cables required to put together and install the office. In these lists and specifications the complete nomenclature of products, the manufacturer, the plant or catalog number of the product, the number of units, and so on are indicated.

The cost of equipment and installation operations are determined using estimates compiled on the basis of official documents effective at the time of designing the office: price lists, special orders of the USSR Communications Ministry, and so on. The equipment estimate includes all of the equipment elements listed in the order specifications and lists, and the installation estimate, a complete list of the installation operations, operations of adjustment and breakin of installed equipment and also for service switching and introduction of the office as a whole into operation. When compiling the equipment estimates, mark-ups are added for packaging, transport expenses, procurement and warehousing expenses and so on. When compiling the installation estimates, the corresponding mark-ups are considered.

The order specifications, lists and estimates are compiled on defined standard forms which are presented in the standards for AMTS design.

CHAPTER 3. DESIGN PRINCIPLES OF AMTS AND UAK CHANNELS AND EQUIPMENT

3.1. General Remarks

Teletraffic theory which forms the basis for calculating the number of channels and switching equipment has been discussed quite completely in numerous published sources [5, 6, 7, 8]. In this chapter only a brief discussion is presented of the engineering methods of calculating the number of channels for the long-distance and intrazonal networks, the service quality characteristics and the general principles of calculating the volume of AMTS and UAK equipment.

3.2. Procedure for Calculating the Number of Long-Distance Telephone Network Channels

The calculation of the number of long-distance telephone network channels is based on predicting the load for the investigated future. When predicting the load, the influence of various factors such as the development of the national economy, population growth, increased telephone density (number of telephones per 100 residents) and the development and improvement of the long-distance telephone service means on the growth of long-distance traffic is taken into account.

The number of channels on a routing is determined as a function of the traffic on this routing, the quality norms, service discipline and a number of other factors. The load on a group of channels on a routing depends, in turn, on the expected number of long-distance calls on the given routing realized during the peak load hour (PLH) and the average time the channel is busy for one call.

In order to calculate the number of long-distance calls during the PLH, the annual long-distance telephone traffic is first determined, that is, the expected number of long distance calls for the last year of the designed period $Q_{prospective}$. The existing long-distance traffic on the given routing (by statistical data for the last preceding year) Q_{exist} is taken as the initial value for the calculation.

For consideration of all factors influencing the prospective increase in traffic compared to the existing traffic, the corresponding coefficients are introduced: k_{nc} -- the development of the national economy (growth of national income); k_{pop} -- the increase in population; k_{td} -- the increase in telephone density; k_{qual} -- the improvement of long-distance service quality (conversion to a high speed or direct service system).

The values of the coefficients k_{nc} and k_{pop} are determined by the materials from local planning agencies obtained during the surveys and the coefficient k_{td}, by the effective telephone density norms for the investigated future. The coefficient k_{qual} is taken as 1.5 on conversion from the delay-basis to the no-delay service system, and on conversion from the delay-basis system to high-speed service the coefficient is $1.5 \cdot 1.5 = 2.25$.

Thus, the amount of prospective annual long-distance traffic is determined from the expression $Q_{prospective} = Q_{exist}k_{nc}k_{pop}k_{td}k_{qual}$ calls/year.

In order to find the amount of traffic in the PLH, the annual traffic is recalculated to the average diurnal traffic. Here nonuniform traffic distribution by seasons of the year is taken into account, for which $Q_{prospective}$ is divided not by 365 days but provisionally by 300 days. Then the average diurnal traffic is recalculated by the concentration factor k_{PLH} to get the PLH traffic. The value of the concentration factor is determined by statistical materials in the survey process. In the majority of cases $k_{PLH} = 0.1$.

When determining the average time the long-distance channel is busy for one call T_p, it is necessary to consider the presence of repeated calls, for they increase the load on the network. The appearance of repeated calls is explained by the fact that in any phase of setting up a call (ATS_{out}-$AMTS_{out}$-UAK-$AMTS_{in}$-ATS_{in}) it can be lost either as a result of the absence of free connecting paths in the initial and intermediate links of the system or as a result of the called subscriber's being busy or not answering in the last link. The lost call in the majority of cases will lead to repeated calls which increases the total time the long-distance channel is busy to complete one call.

The influence of repeated calls depends to a significant degree on the size of the losses assumed in the calculation. Considering that the number of channels on the last choice path must provide for (by the standards) a loss probability of no more than 0.01, the influence of repeated calls will be correspondingly small in the first links of the long-distance call channel. However, in the last phase -- the ATS on the incoming end where the call losses as a result of the called subscriber's being busy or not answering or for any other reason cannot be regulated and are purely random -- the number of repeated calls can turn out to be significant. The time spent on each repeated call is equal to the time of setting up a call on the corresponding network links.

Thus, when determining the total busy time of the long-distance channel for one call it is necessary, in addition to the duration of the call itself, to consider the total time spent on all repeated calls preceding the completed call.

If we designate the average talk time of a call T_0, the call setup time T and the average number of calls (attempts) for one completed call Π, the average busy time of the long distance channel per call $T_p = T\Pi + T_0$.

As the statistical data of long-range observations indicate, the average talk time of a long-distance call with automatic hook-up will be $T_0 = 4$ minutes, and the number of attempts per call completed will be on the average $\Pi = 2.5$. The call setup time which is insured by the automatic switching systems used on the long distance network is on the average equal to T = 0.5 minute. Beginning with this fact, the average busy time of the long-distance channel per call with automatic connection is defined as: $T_{p.a} = 4.0 + 0.5 \cdot 2.5 = 5.25$ minutes.

The load during the PLH is calculated by the formula, Erlangs:

$$Y_{PLH} = Q_{prospective} k_{PLH} T_p / 300 \cdot 60), \tag{3.1}$$

The number of long-distance channels, depending on the load, is determined considering the organization of direct and bypass paths in accordance with the structural principles of the automatically switched long-distance telephone network. As was pointed out earlier, the direct channel groups are organized only between the AMTS where the amount of traffic in the forward and return directions is no less than 8 to 10 erlangs. The direct channel groups are designed for high use, and the unserviced load with respect to the direct channels is routed over the bypass paths via the UAK. On routings with small amount of traffic requiring less than six long-distance channels, it is uneconomical to organize direct groups; therefore the load on these routings is routed directly to the UAK. The number of channels on the UAK routing is calculated for high service quality, that is, small losses (P = 0.01).

The number of channels routed to the UAK for servicing the excess load and the load of the lightly loaded routings not having direct channels is calculated by the "equivalent substitution" method which takes into account the increased fluctuation (dispersion) of the excess load by comparison with the simplest.

On the whole, the method of calculating the number of channels on the direct and bypass routings consists in the following. For each routing, formula (3.1) is used to calculate the magnitude of the incoming load Y_{PLH}. The number of channels n in the direct group of each routing is determined as a function of the load Y and the distance to the opposing AMTS (by arguments of economic expediency). In order to select the capacity of the direct group considering its extent, the "Giprosvyaz'" Institute tables are used, one of which is presented in appendix 2. As is obvious from the table, the number of channels in the direct group of the outgoing routing is a multiple of six, which permits the use of whole 12-channel groups of high frequency transmission equipment for both directions (outgoing and incoming) of the direct group.

The average values of the excess load R are indicated in the same table for each incoming group of direct channels. The value of R is equal to the product of the incoming load Y times the magnitude of the losses $E_n(Y)$ defined by the first Erlang formula for systems with explicit losses:

$$E_n(Y) = \frac{Y^n/n!}{\sum_0^n Y^i/i!}; \quad R = YE_n(Y). \tag{3.2}$$

The values of $E_n(Y)$ for any n are available in the loss probability tables for the fully accessible group of lines of G. P. Basharin [9].

In addition to the average excess load, the excess traffic is characterized by load dispersion, that is, the measure of its deviation from the average value. The load dispersion D is calculated by the formula

$$D=R(1-R+Y/(n+1+R-Y)). \qquad (3.3)$$

Figure 3.1a shows c routings with $n_1, n_2, \ldots, n_c$ direct channels per routing. The load Y_i (the simplest flow) goes on the ith routing serviced by n_i channels. The excess load from this routing with the parameters R_i and D_i together with the excess load from other routings goes to N channels of the bypass routing which is common to all c direct routings.

The total number c of routings includes the routings on which direct groups are organized and also a small number of lightly loaded routings on which use of direct groups is uneconomical. The channels of the lightly loaded routings service the load of only the simplest flow having comparatively insignificant fluctuations which can be neglected. Therefore the load dispersion on these routings is taken equal to zero.

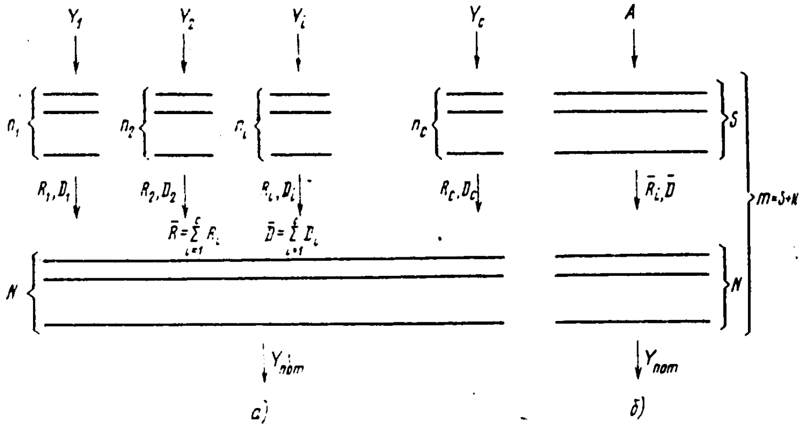

Figure 3.1. Calculation principle of the number of long-distance channels by the "equivalent substitution" method.

Key: 1. Y_{loss}

After determining the excess load and the dispersion for each routing, the total excess load is calculated (together with the load of the lightly loaded routings) coming to N channels of the bypass routing, and the total dispersion is also calculated:

$$\bar{R}=\sum_{i=1}^{c} R_i \,;\; \bar{D}=\sum_{i=1}^{c} D_i . \qquad (3.4)$$

The total load parameter $\bar{R}$ on the channel group of the bypass routing is the probability of losses which can be expressed by the ratio of the lost traffic Y_{loss} to the total:

$$P_{bypass} = Y_{loss}/\bar{R}. \qquad (3.5)$$

Let us provisionally replace the sum of the direct channels by one fully available group containing S channels for which an excess load with the parameters $\bar{R}$ and $\bar{D}$ is formed on arrival of the equivalent load A.

Knowing $\bar{R}$ and $\bar{D}$, it is possible to find the values of A and S by the curves in Figure 3.2. Then the sum of the direct channels depicted in Figure 3.1 is replaced by one fully available group of S + N outgoing lines to which the equivalent load A comes (see Figure 3.1b). The excess load of the given fictitious group, the parameter of which is Y_{loss}, is approximately equal to the desired excess load with the parameter Y_{loss} of the diagram depicted in Figure 3.1a.

Using the curves in Figure 3.2, the total number of channels $S + N = m$ is determined by the values found for the equivalent load A and Y_{loss}. The number of channels on bypass routing will be defined as $N = m - S$.

The magnitude of the lost traffic Y_{loss} on N lines of the bypass routing is calculated by the formula $Y_{loss} = P_{bypass}\bar{R}$ where the loss probability norm $P_{bypass} = 0.01$.

The long-distance telephone channels connecting the designed office at the other AMTS and UAK of the long-distance network of the country are a component part of the given network, and therefore the number of them cannot be determined in isolation. The number of long-distance channels for the entire network as a whole (in accordance with the general principles of network construction) is calculated during the process of development of the masterplans for development of the long-distance telephone network of the country for each five-year period. From the general results of the calculations, data are selected on the number of channels on the routings included in the designed office.

3.3. Initial Principles of Calculating the Number of ZSL and SLM of the Intrazonal Network

For the intrazonal network the number of channels -- ZSL and SLM -- between the AMTS and the TsS of their zone is calculated beginning with the prospective traffic created by the subscribers on the local zone networks.

When calculating the ZSL, the average number of long-distance calls per day for one subscriber to the local telephone network (c_{sub}) and the total number of subscribers of this network (N_{sub}) calculated for the last year of the designed period (by the telephone density norms) are taken as the initial values.

Considering that the value of c_{sub} is most influenced by the servicing quality, that is, the transition to an improved operating system, the prospective value of $c_{sub.prospective}$ is determined from the expression

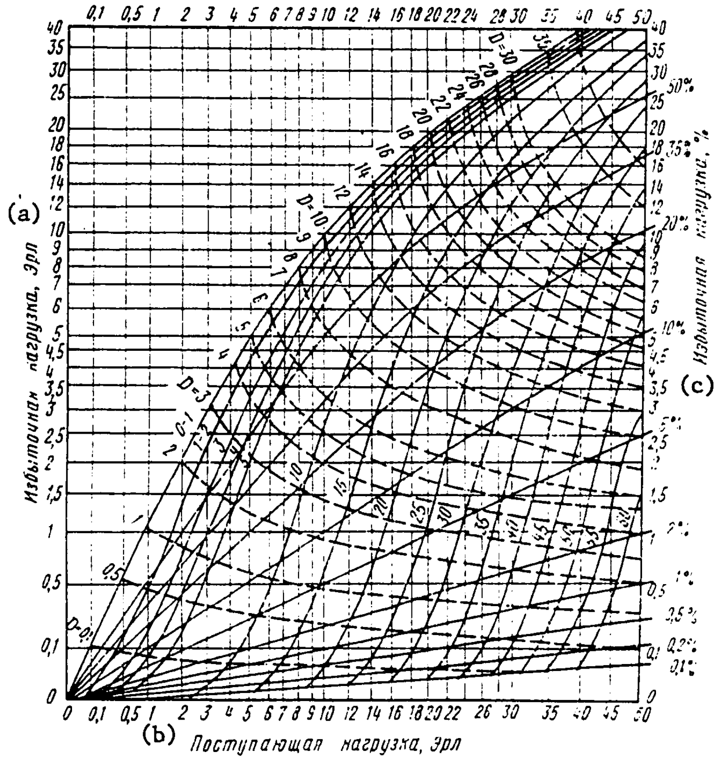

Figure 3.2. Wilkinson curves: --- dispersion; —— number of channels.

Key:
- a. excess load, erlangs
- b. incoming load, erlangs
- c. excess load, %

$$c_{sub,prospective} = c_{sub,exist}k_{qual},$$

The mean diurnal prospective traffic between the rayon subscriber serviced by the TsS is

$$Q_{prospective} = N_{sub,prospective}c_{sub,prospective}.$$

The traffic on the ZSL in the PLH in erlangs is determined considering the average busy time of the ZSL for one long-distance call (t_p minutes):

$$Y_{ZSL} = Q_{prospective}k_{PLH}t_p/60.$$

The average time that the intrazonal network ZSL is busy for one long-distance call is determined (analogously to the channels of the long-distance network) considering the presence of repeated calls. The average number of repeated attempts per completed call is 2.5 attempts, and the call setup time is on the average 0.5 minutes. As for the average net call time, according to the observation statistical data with intrazonal service this time is 3 minutes. Thus, the average busy time of an outgoing channel for intrazonal service (SLM) per call $T_{p(SLM)} = 2.5 \cdot 0.5 + 3.0 = 4.25$ min. For the ZSL the given time is increased by approximately 20% as a result of the waiting time and the call setup time at the input of the system (this percentage fluctuates depending on the type of AMTS in the presence of AON). Therefore the average busy time of the ZSL of an intrazonal network per long-distance call $T_{p(ZSL)} = 4.25 \cdot 1.2 = 5.1$ minutes.

The number of ZSL from each TsS to the AMTS is defined as a function of the load Y_{ZSL} for a service quality norm P = 0.01. For calculation of the number of ZSL, the methods and calculation tables pertaining to the type of ATS equipment which is installed at the given TsS are used.

The number of SLM from the AMTS to the TsS is calculated beginning with the size of the load coming to the subscribers of a given rayon from other AMTS over the incoming long-distance channels and also from the local network subscribers of their zone through the TsS. In accordance with the seven-digit numbering system in the zone, as a rule one 100-thousand group of numbers was set aside for each rayon serviced by one TsS. In individual rayons or isolated cities of the zone with prospective capacity greater than 100,000, several 100-thousand groups are allocated respectively. A separate SLM group, the number of channels in which is calculated as a function of the traffic on a given routing with service norm P = 0.01 is routed from the AMTS to every 100-thousand group of numbers of the city and rural telephone networks.

The results of calculating the number of ZSL and SLM are used when developing the master plans for development of the intrazonal network for the selection of the optimal version of construction of the primary and switched networks of the zone. Depending on the selective structure of the switched network (purely radial or with the organization of zone telephone junctions) the ZSL and SLM groups are produced which are included in the AMTS.

The calculated data for the number of channels and size of loads on each routing for long-distance and intrazonal service for the designed office are written in the form of a table, the results of which determine the total capacity of the AMTS and total office traffic at PLH.

3.4. Prospective and Installed Capacity of AMTS and UAK

By the capacity of the AMTS we mean the total number of channels of the long-distance telephone network, ZSL and SLM of the intrazonal network, the ZSL and SLM for coupling to the GATS, the interoffice lines and long-distance channels of the intrazonal routings with manual and semiautomatic means of setting up calls. The capacity of the UAK is the total number of incoming and outgoing long-distance channels included in the switching equipment for tandem connections.

When designing new buildings for the AMTS with UAK, the prospective capacity of the office and the installed capacity of the equipment are calculated. The prospective capacity of the office determines the volume of the designed building and it is calculated for a development period of 15-20 years after putting the office into operation. The magnitude of the prospective capacity of the office can be determined beginning with the maximum technical capacity of the selected type of equipment or consolidated, from calculating the total expected increase in number of channels of the long-distance and intrazonal networks for the design period. The installed office capacity determines the volume of equipment designed for installation considering the development of the office (without installation of additional equipment) for five years after putting it into operation. The necessity for creating this equipment reserve arises from the fact that the structure of the AMTS does not permit frequent changes in the number of instruments. The principle that the installed capacity of the AMTS must correspond to the number of channels of the long-distance and intrazonal networks which is planned by the master plans for the last year of the five-year operating period is fixed in the production design norms [3].

In addition to the prospective and installed capacities when designing the AMTS, the office capacity for the startup period must be determined. The calculation of the startup capacity is specific for each specific office and must consider a number of factors such as the existing number of channels on each routing and methods of servicing them, specific plans for development of service in the near future at the time of startup, the state and degree of automation of local telephone networks and other factors characterizing the startup period. Determination of the startup capacity of the office permits provision for the composition and amount of equipment which are required for smooth transition from the existing office to the new AMTS without interrupting service.

3.5. Service Quality Indices

Optimal quality index norms for the operation of the instruments are established for every type of AMTS on the basis of data on the instrument service system. The general quality of servicing of the office depends on the service quality indices in the individual stages of setting up the call.

There are basically two service systems:

1. The system with losses -- characterized by the fact that the calls coming to the switching system at a time when there are no free paths on the required routing are lost, and the subscriber receives a "busy" signal. The servicing quality in the systems with losses is characteristized by probability of a reject as a result of busy instruments or lines.

2. A system with waiting is characterized by the fact that the calls coming when there are no free connecting devices are placed in a queue for waiting and are serviced on release of one of the connecting devices. The busy time of the devices for setting up a call is made up of the constant value -- the time directly spent on performing the operating -- and the variable determined by the waiting for release of the next instruments (internal waiting). The busy time of an instrument can be considered constant if the busy time for all calls is the same and if the instrument need not wait for release of other of the system instruments.

The total time spent on one call is made up of three components; external waiting, the actual servicing time and internal waiting.

External waiting is the time during which the call is forced to wait before it is received by the system, that is, the waiting time before arriving at the system. The waiting time ends at the beginning of servicing.

The actual servicing time is a constant component equal to the minimum call setup time and there is no waiting.

The internal waiting is the total waiting time for release of subsequent instruments in the call setup channel.

The basic service quality indices in systems with waiting are the waiting probability $p(\gamma > 0)$, the waiting time distribution function $P(\gamma > t)$ and the average waiting time. The lower the probability of losses and the average waiting time, the higher the service quality. However, extraordinary reduction in the quality indices implies a significant increase in the amount of office and line equipment and excess expenditures, respectively. In addition, the minimum losses and waiting time must be insured only for the peak load hour, and for the rest of the time the actual service quality will be higher.

When determining the admissible norms for the quality indices, the following arguments are considered:

for a system with losses the loss norm must be such that the subscribers do not get the impression of unsatisfactory operation of the office and that with load fluctuations the subscriber service quality will not drop below the admissible limit;

for a system with waiting, the average waiting time on the AMTS instruments must be such that uncertainty of correct operation of the office is not generated in the subscribers and uncertainty of correctness of the action taken by the subscriber himself is not generated (for example, doubt as to whether the called subscriber has been fully dialed). The internal waiting must not lead to a noticeable reduction in carrying capacity of the instrument.

In the connecting channel the general service quality is determined by the loss probability when setting up a call between the calling and called subscribers. It consists of individual quality indices in various sections of the switching equipment system. The overall losses are approximately equal to the total losses of the successive sections of the connection channel. The optimal distribution of the total losses with respect to sections of the system presupposes that the greater part of the losses can be permitted on devices which require the highest expenditures. Since the cost of the line facilities (especially long distance) is generally higher than the cost of the office equipment, it is more economical to provide relatively low service quality (that is, higher losses) on the line facilities. Beginning with this fact, the following service quality indices for calculating the number of lines in the channels and instruments are recommended for different sections of the automated network of the country:

1) on the zone network for outgoing calls over the ZSL_z the total losses from a subscriber in the city in which the AMTS is located to the AMTS should not exceed 0.01, including the section from IGI to the AMTS, 0.005. For incoming calls over the SLM, the total losses should not exceed 0.005, including the section from the AMTS to the UVS or from the AMTS to the ATS, 0.002. The number of ZSL_z and SLM_z between

the AMTS and the TsS of the rural network and also between the AMTS and the telephone network of selected cities in which there are no AMTS is calculated with losses of 0.01;

2) on the long-distance network the service quality is determined by the service quality indices on the last-choice path. The number of channels for one section of the last choice path is calculated for a loss probability of 0.01;

3) at the AMTS and UAK the calls are serviced on certain instruments with losses and on others with waiting.

For the AMTS-4 and the UAK of the AMTS-4 type with automatic long-distance service the loss probability norm in the switching system is 0.003. The average waiting time for connection of a marker for any call should not exceed 30 milliseconds. Beginning with this fact, the carrying capacity of the marker is determined -- 70,000 calls with a load of no more than 0.6 to 0.65 Erlangs. It is recommended that the number of registers be determined for $P(\gamma > 0) \leq 0.01$.

In the ARM-20 type offices the loss probability norm for calculating the switching system and senders is taken as 0.002, and for calculation of the code receivers and code transmitters, 0.001. At the AMTS KE for calculating group receivers and transmitters the loss probability norm of 0.001 is used.

3.6. General Principles of Calculating the Volume of AMTS and UAK Equipment

The number of devices of each type is determined as a function of the load in the PLH subject to servicing by a group of instruments when observing the quality index norms for operation of the office. The instruments of the connecting and control units receive and service all calls coming to the office independently of whether the calls are completed or not. Only one group of instruments -- the equipment for automatic calculation of charges -- services only the completed calls.

The number of completed calls in the PLH (C) is found when calculating the channels and can be expressed by the ratio $C = Y/T_p$, where Y is the load of the channels of the long-distance or intrazonal network in the PLH, and T_p is the average busy time of the corresponding channel for one call (considering repeated attempts).

The number of calls coming to an office includes, in addition to the primary calls, also all repeated attempts occurring as a result of loss of the primary call. In accordance with the operating indices adopted when calculating the channels, the average number of attempts per completed call is about 2.5. Beginning with this fact, the number of attempted calls (B) can be defined from the expression $B = 2.5C$.

The total call flows reaching the AMTS from different sources, depending on the address information are distributed with respect to different groups of outgoing routings. The percentage distribution of the call flows depends on the distribution of the telephone gravitations and is determined for each specific city on the basis of statistical observations during the process of survey work.

Using the data on the percentage call flow distribution, the loads created by these flows on the different routings are determined. For each type of instrument the load is determined by the number of attempted calls subject to servicing by the given group of instruments and the average busy time of an instrument for servicing one attempted call. The busy time of an instrument for servicing one call depends on the type of office equipment and the servicing system of the given group of instruments.

The number of AMTS instruments is calculated on the basis of teletraffic theory. The calculation methods depend on the type of office equipment and must take into account all the basic characteristics of the system: the structure of the office, the type of switching devices, the types of switching systems and the route formation, the type of control units, and so on. With respect to structure the AMTS are basically divided into two groups:

1) offices which consist of several switching stages (AMTS-1, AMTS-2, AMTS-3).;

2) offices containing one switching system AMTS-4, ARM-20, AMTS KE).

In the first group of offices the switching stages are separated with respect to functions as follows:

the incoming group hunting stage (VGI or IIGI) receives the calls from the local telephone network subscribers and distributes them on the outgoing routings;

the long-distance connection stage (MS or MGI) sets up the outgoing, incoming and tandem long-distance connections;

the outgoing communications stage with local telephone networks (GIM) receives the incoming long-distance and intrazonal calls and directs them to the local network subscribers of the given city and zone.

At the AMTS-2, in addition to these stages there is another RVK stage for call distribution by cordless type switchboards. The problems of designing equipment for any type of office reduce to the fact that the number of instruments of all types correspond strictly to their carrying capacity, insuring satisfaction of the quality index norms. For example, when determining the number of switching modules and control units it is necessary to begin not only with the number of lines subject to connection at the input of the system, but also the number of calls which this system must service considering the carrying capacity of the control units.

The designs of equipment for various types of offices are discussed in more detail in subsequent chapters.

CHAPTER 4. BRIEF INFORMATION ABOUT THE DESIGN OF AMTS-1, AMTS-2 AND AMTS-3 AUTOMATIC LONG-DISTANCE TELEPHONE OFFICES

4.1. General Remarks

At the present time AMTS-1M equipment is being widely used on the long-distance telephone network of the country. As new AMTS are built, it will be reduced correspondingly. However, in the near future in certain parts of the country the installation of this equipment for temporary use is still required.

Considering that the design of the AMTS-1M has been simplified significantly as a result of sectional assembly of the equipment by the plant and also the fact that sufficient experience in its application locally has been accumulated, a brief description of the equipment and general design recommendations are presented in this chapter. The equipment and its design are described in more detail in [10].

The AMTS-2 type offices are installed in several cities of the country. However, further production of this equipment has been curtailed and will be limited only to the necessary equipment to expand the existing offices. Therefore only brief information will be given in this chapter on this office, and some general recommendations will be made for designing the expansion of it.

At the present time AMTS-3 type offices are being used for installation in the medium oblast centers of the country. The use of this equipment will be continued until mass output of a new type office has been tooled up for. Inasmuch as the problems of designing AMTS-3 offices have been quite fully discussed in [10], only brief information will be presented here on this office and its design.

4.2. AMTS-1M Office

The AMTS-1M office contains ten-step equipment. It is constructed on the basis of the semiautomatic long-distance telephone service equipment of the two-frequency signal system and it is supplemented by equipment providing the possibility of setting up outgoing long-distance calls automatically.

Additional equipment is used to record the long-distance number of the called subscriber and control the operation of the MGI stages and also for automatic calculation of the charges for the calls. The maximum capacity of the AMTS-1M is 180 to 200 long-distance channels (for automatically setup outgoing calls). The maximum number of routings for the automatic outgoing long-distance telephone service is 40.

The talk channel in the AMTS-1M is two-wire. The outgoing automatic service from ATS subscribers is realized over the ZSL. After dialing the long-distance number of the called subscriber the subscriber must dial his own number (to pay for the call). The SLM channel is used to see that the subscriber has dialed his own number correctly.

The structural diagram of the auxiliary equipment for the AMTS-1M automatic service is presented in Figure 4.1.

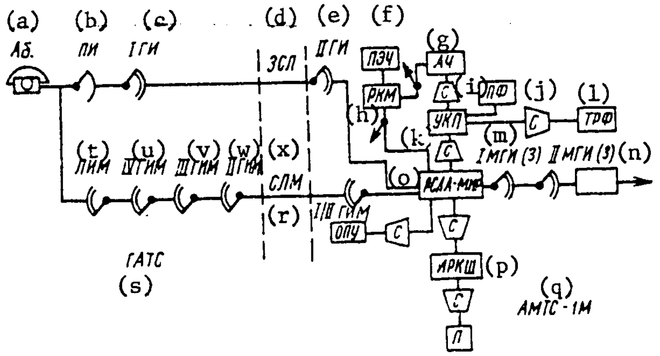

Figure 4.1. Structural diagram of the AMTS-1M.

Key:	a. subscriber	g. ACh	m. IMGI(3)	s. GATS
	b. PI	h. RKM	n. IIMGI(3)	t. LIM
	c. IGI	i. S	o. RSLA-MIR	u. IVGIM
	d. ZSL	j. PF	p. IRKSh	v. IIIGIM
	e. IIGI	k. UKP	q. AMTS-1M	w. IIGIM
	f. PECh	l. TRF	r. I/IGIM	x. SLM

In order to setup an outgoing call automatically, the calling subscriber must dial a defined two-digit number in which the first digit ("8") holds the ZSL to the AMTS, and the second digit (as a rule, a "9") hooks the IIGI of the AMTS to a free output to the RSLA-MIR system.

The RSLA-MIR realizes exchange of signals between the GATS and AMTS, it performs the functions of an outgoing sender for automatic long-distance service and the device for primary recording of the data needed for automatic calculation of the charge for the calls. Inasmuch as the RSLA-MIR system is held for the interseries time, transmission of a dial tone that it is ready to receive the long-distance number is not required.

After dialing the first two digits, the long-distance number of the called subscriber is dialed. It consists of a three-digit code of the required city and the seven-digit subscriber number. If the called subscriber number contains less than seven digits, then zeros are dialed in place of the missing digits before the number. This ten-digit number is recorded at the RSLA-MIR. After completion of dialing of the ten-digit long-distance number the calling subscriber, also without hearing a further dial tone, dials his own number which is recorded in the RSLA-MIR. The calling subscriber's own number which he has dialed is simultaneously transmitted to the instruments of the long-distance patch cord of the GATS (GIM-LIM). When the subscriber is finished dialing his own number, the connection of the subscriber line to the RSLA-MIR is set up over two paths: the ZSL via the IGI and IIGI and the SLM via the GIM-LIM.

The correctness of the number of the calling subscriber is checked by the office checking circuit OPU which is connected to the RSLA-MIR through the connector C when the calling subscriber has finished dialing his own number. The OPU checks for the presence of a closed circuit through the instruments of the local (ZSL) and long distance cords (SLM) of the ATS by transmitting an audio frequency current.

The outgoing register IRKSh receives three digits of the long-distance code from the RSLA-MIR and then transmits them to the decoder P. From the code the decoder determines the information -- the digits then transmitted via the IRKSh in the MGI stage to hold a free channel on the required routing. After the subscriber answers,the reckoning of the length of the call begins, and on completion of the call all of the information needed for sending bills to the subscribers is recorded on a punchcard by means of the automatic equipment for calculating the charges.

The structure of the AMTS-1M equipment provides for assembly of it in sections, including all forms of individual and group equipment for the number of long-distance channels which corresponds to 90 RSLA-MIR systems. Three sections of equipment are provided for maximum capacity of the office.

The calculation of the amount of AMTS-1M equipment basically reduces to determining the number of RSLA-MIR systems, ZSL and the channel equipment beginning with the designed number of long-distance outgoing channels and their loads. Depending on the number of RSLA-MIR systems, the number of equipment sections is determined.

In the majority of cases the AMTS-1M equipment is placed in an existing facility of the semiautomatic communications junction which permits most efficient use of general office and auxiliary equipment.

4.3. AMTS-2 Office

The AMTS-2 equipment provides for connection of up to 3000 to 4000 long-distance channels. With respect to type the office is an electromechanical system. Multiple crossbar connectors MKS are used as the switching devices, and relay markers are used as the control units. Cordless type switchboards are provided to set up calls semiautomatically and manually at the office. In addition, the office contains devices for setting up calls on the zone network with automatic service. The talk channel at the office is four-wire.

The structural diagram of the AMTS-2 office is shown in Figure 4.2. From the figure it is obvious that the office contains several switching stages; IIGI, MS, RVK and GIM, each of which performs its designed functions. All of the switching stages are assembled from MKS modules and form two types of switching systems: two-link (GI and GIM) and four-link (MS and RVK). In the two-link systems 80-120-400 capacity modules are used. Each module is controlled by its own marker. The four-link stages are assembled from symmetrically arranged two-element modules 200-200-200, 200-200-300 or 400-400-400 capacity, and they are controlled by a common group of markers (MNS, MRVK).

Crossbar register finding stages RI are used which are assembled from 100-500-40 capacity modules.

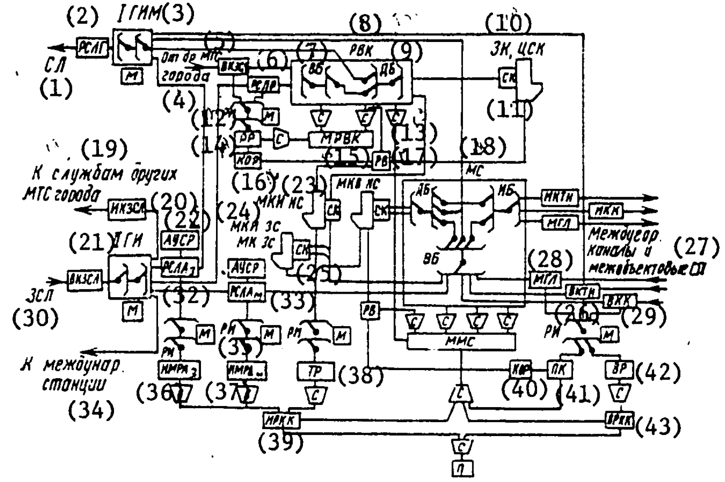

Figure 4.2. Structural diagram of the AMTS-2.

Key: 1. SL
2. RSLG
3. IGIM
4. from another MTS of the city
5. VKZSL
6. RSLR
7. VB
8. RVK
9. DB
10. ZK, TsSK
11. SK
12. RI
13. S
14. RR
15. MRVK
16. KOR
17. RV
18. MS
19. to services of other MTS of the city
20. IKZSL
21. IIGI
22. AUSR
23. MKI NS
24. MIKZS
25. SK
26. VKTN
27. long-distance channels and interfacility SL
28. MGL
29. VKK
30. ZSL
31. RSSL
32. $RSLA_Z$
33. $RSLA_M$
34. to the international office
35. RI
36. $IMRA_z$
37. $IMRA_M$
38. TR
39. IRKK
40. KOR
41. PK
42. VR
43. VRKK

The equipment for automatic calculation of the call charges AUSR interacts with the equipment for automatic determination of the number of the calling subscriber, and in the absence of AON it calculates the charges by having the subscriber dial his own number.

The AMTS-2 includes a set of automatic monitoring and testing equipment, switching equipment of the cordless type and all-office equipment for various purposes.

The design of the expansion of the AMTS-2 office reduces to determining the required number of auxiliary devices of all types in accordance with the number of long-distance channels for which the office capacity must be increased. Determination of the number of line systems of all types presents no difficulties if the additional number of long-distance channels, the intrazonal network lines and the lines for connection to the GATS are known.

Calculation of the crossbar stages of the IIGI and IGIM is made considering the additional load going to these stages. Depending on the volume of the expansion, the number of lines in the direction of the IIGI bank can either be recalculated to obtain the total, larger groups of lines, or for additional modules, independent groups of lines can be organized. The calculation of the equipment for the four-link long-distance connection stage (MS) presents some difficulty. Beginning with the carrying capacity of the markers in this stage, it is necessary to make a careful calculation of the load on the group of markers and perform a careful analysis of the possibility of using one common group of markers. The maximum number of markers in the group is 10. In the case where the total load (considering the additional load) exceeds the carrying capacity of one group of markers, it is necessary to provide a second group of markers. Here the incoming modules are divided into two groups, respectively, each of which is serviced by its own group of markers, and the outgoing modules form a common group, and any marker can service a call to any outgoing channel.

The equipment provided for expansion of the office must be placed in the same building with the existing AMTS-2 so that when installing this equipment and switching services the normal operation of the existing equipment will not be interfered with.

4.4. AMTS-3 Office

Brief Description of the Office

The AMTS-3 medium-capacity automatic long-distance telephone office is a set of automatic switching devices and switching equipment of the MRU type. The maximum capacity of the automatic switching devices does not exceed 1400 incoming and outgoing long-distance channels.

The office is designed for servicing basic terminal traffic and is used for installation in small oblast centers and cities of oblast and republic subordination which are not locations of tandem junctions. The layout of the office provides for establishment of tandem connections if necessary.

The office equipment includes devices for automation of the intraoblast service by the zone principle. The channels of the intrazonal network (ZSL and SLM) are included in finder stages separate from the long distance ones, and the number of them is in practice not limited by the layout of the office.

Setting up calls semiautomatically with channels included in the AMTS-3 equipment takes place via MRU type switchboards connected to the AMTS-3 by matching circuits and located in a common building.

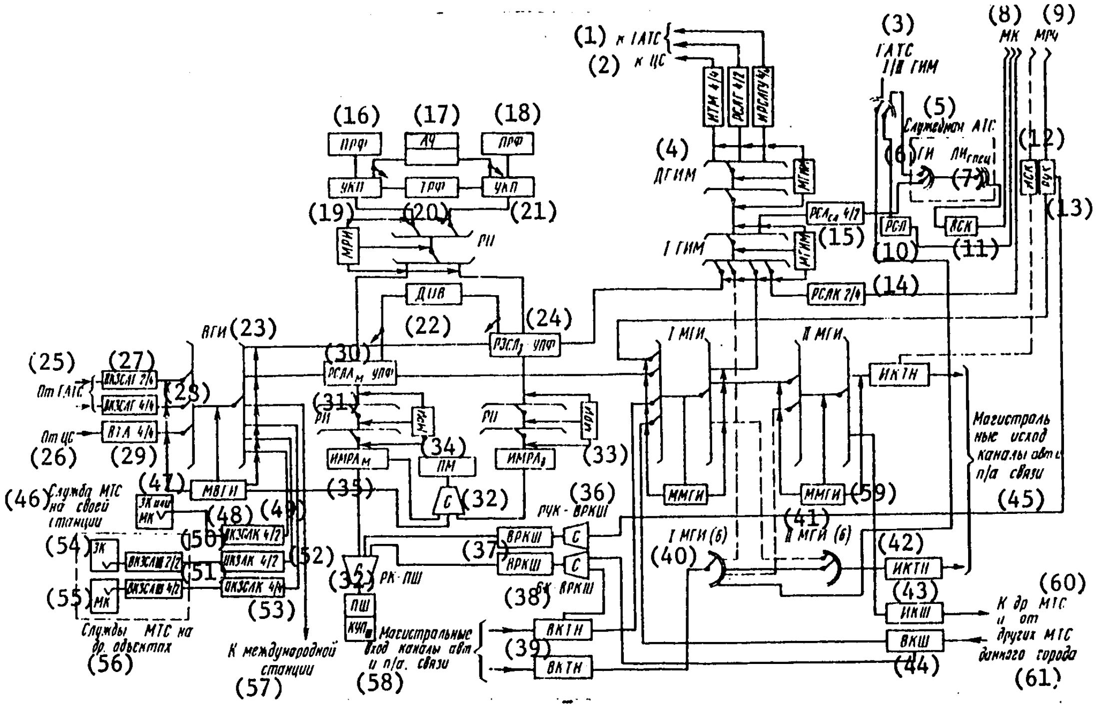

Figure 4.3. Structural diagram of the AMTS-3.

Key:
1. to the GATS
2. to the TsS
3. GATS I/II GIM
4. DGIM
5. order-circuit ATS
6. GI
7. LI$_{\text{special}}$
8. MK
9. MRU
10. RSL
11. VSK
12. ISK
13. RUK
14. RSLK 2/4
15. RSL$_{SL}$ 4/2
16. PRF
17. ACh
18. PRF
19. UKP
20. TRF
21. UKP
22. DUB
23. VGI
24. RZSL$_3$ UPF
25. from the GATS
26. from the TsS
27. VKZSLG 2/4
28. VKZSLG 4/4
29. VTA 4/4
30. RSLA$_M$ UPF
31. RI
32. S
33. MRI
34. PM
35. IMRA$_M$
36. RUK-VRKIII
37. VRKIII
38. VK-VRKIII
39. VKTN
40. I MGI(5)
41. II MGI(6)
42. NKTI
43. IK Sh
44. VK Sh
45. long-line outgoing channels for automatic and semiautomatic service
46. MTS service at its office
47. ZK or MK
48. MVGI
49. VKZSLK 4/2
50. VKZSLSh ...
51. TsZLK 4/2
52. TsKZLK 4/2
53. TsKZSLK 4/4
54. ZK
55. MK
56. MTS service at other facilities
57. to the international office
58. long-line incoming automatic and semiautomatic service channels
59. MMGI
60. to another MTS
61. from other MTS of a given city

With respect to type, the AMTS-3 equipment is an electromechanical crossbar system with finder stage control. MKS combined into modules are used as the switching devices, and relay markers are used as the control units. The switching stages are constructed from standard two-link MKS modules. Each module is controlled by its own marker. This structure of the switching devices permits organization of joint operation if necessary (at one office) with the two-frequency semiautomatic service equipment based on ten-step selectors. In this case some corrections are introduced into the diagrams of the IKTN and VKTN systems of the semiautomatic service channels.

The AMTS-3 equipment includes the equipment for automatic calculation of the charges for calls for outgoing automatic long distance and intrazonal service. The euipment is designed to operate by the method of automatic determination of the number and category of the calling subscriber under the condition that the AON equipment is installed in each rayon ATS of its city and the TsS of the zone. In the absence of AON equipment, the layout of the office provides for automatic reckoning of the charges for calls when operating by the procedure where the calling subscriber dials his own number. The number information is transmitted from the ATS to the AMTS-3 by intermediate senders PR which must be installed at each rayon ATS of its city and the TsS of the zone. Here the PR can operate both jointly with the AON equipment and in the absence of AON equipment.

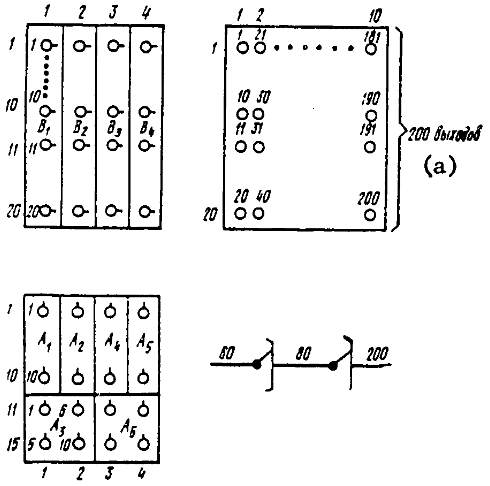

Figure 4.4. Diagram of the group formation of a two-link module 60-80-200 (VGI, MGI, GIM stages).

Key: a. 200 outputs

In the presence of other MTS in the city, the AMTS-3 equipment permits organization of joint operation with them, for which the office has matching line sets.

The AMTS-3 equipment, the channels included in it and the trunks are checked and tested using a set of automatic and manual monitoring and testing equipment.

For organization of automatic order circuits, the ten-step order circuit ATS is used which is made up of the equipment for two-frequency semiautomatic service.

A structural diagram of the AMTS-3 is presented in Figure 4.3. The switching stages of the VGI, MGI and GIM are made up of two-link MKS modules of 60-80-200 type, each of which is controlled by its own marker. The diagram of group formation of the modules is illustrated in Figure 4.4. The capacity of the line bank of the modules permits organization of a group of lines with availability of 20, 40 and 60. The number of routings can be varied within the limits of 200 outputs from the bank depending on the selected availability.

The MGI and GIM stage modules for connecting the marker contain six RGI senders each of which is attached to ten inputs of the module.

The VGI stage distributes the calls coming over the ZSL from the ATS subscribers of its city (GATS) and from the TsS of its zone, with respect to the required routings: to the long-distance channels for automatic access to other zones, to the subscribers of other ATS of its zone, to the switching services, and so on. The line bank of the VGI stage includes the following systems: RSLA$_M$ and RSLA$_z$ for the outgoing automatic long-distance and intrazonal service; VKZSLK 4/2 for access to the switchboards of its office: IKZLK 4/2, IKZSLK 4/4 for access when necessary to the switchboards of other offices of its city, at which the corresponding incoming systems are installed and also (in the future) systems for access to the international office.

The RSLA$_M$ and RSLA$_z$ systems combined with the primary recording device UPF and the IMRA$_M$, IMRA$_z$ senders receive and record the number information coming from the subscribers when setting up automatic calls and transmitted to the subsequent instruments of the intraoffice connecting path and to the equipment for automatic calculation of charges AUS.

The IMRA senders are connected to the RSLA and the RSLA-UPF to the instruments for calculating the charges UKP via the register finding stages. The RI stage consists of two-link MKS modules with a capacity of 100-50-30, and it is serviced by two markers. The group formation system of the RI stage is shown in Figure 4.5. With respect to carrying capacity of the markers this RI stage can contain no more than three modules. In this case when it is necessary to transmit a larger load, several RI stages have been designed, each of which provides for access to thirty registers.

The long-distance call junction of the MGI, beginning with the capacity of the MKS modules, as a rule, is made up of two stages: IMGI and IIMGI, each of which is controlled by its own markers. Both stages provide for setting up outgoing, incoming and tandem calls with automatic and semiautomatic long-distance service. The following systems are connected to the inputs of the IMGI: the RSLA$_M$ for outgoing automatic long-distance service, the relay-repeater RUK from the MK MRU for outgoing semiautomatic service, incoming long-distance channels VKTN and, when necessary, incoming line systems for interoffice service VKSh from other MTS of its city. Trunks to the GATS and the TsS of its zone and also lines to the modules of the IIMGI stages for access to the long-distance channels are connected to the line bank of the IMGI.

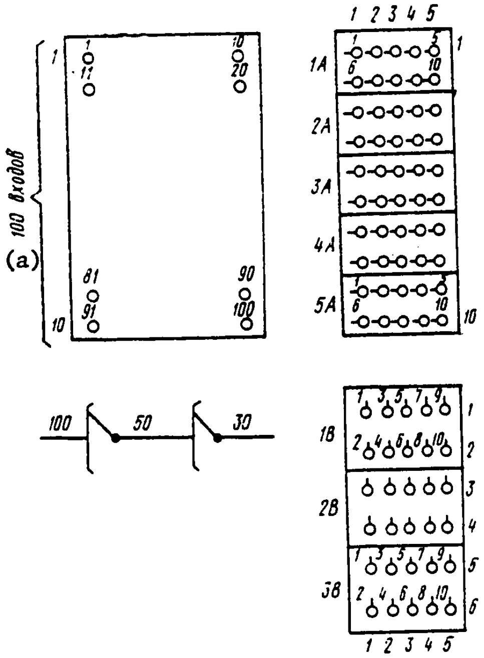

Figure 4.5. Group formation system for the two-link module 100-50-30 (RI stage).

Key: a. 100 inputs

The IIMGI modules are divided into groups, each of which is connected on the input side to one of the routings of the IMGI bank. When joint operation with the two-frequency semiautomatic service equipment is required, provision is made for connection of the outputs of the crossbar stage of the IMGI to the inputs of the ten-step stage of the IIMGI(6) and also connection of the outputs of the IMGI(6) to the inputs of the crossbar stage of the IIMGI.

Outgoing long-distance channels for automatic and semiautomatic service (IKTN) are connected to the line bank of the IIMGI, and if necessary, outgoing line systems for interoffice service IKSh for coupling to other MTS of its city. The groups of long-distance channels on the direct and bypass routings are included, as a rule, in different groups of IIMGI modules.

The outgoing service stage with the local telephone network subscribers (GIM) provides access to the GATS subscribers of its own city, to the subscribers of the rural networks of its own zone via the TsS and also access to the order-circuit ATS. Beginning with the adopted numbering system and capacity of the standard MKS modules, the GIM stage is usually made up of two stages: IGIM and DGIM. The seven-digit subscriber number is realized as follows: the IGIM stage is selected by the digit a of the million group, and the DGIM by the digit b of the 100-thousand group of numbers which corresponds to the junction rayon of the 100-thousand formation for the GATS, and the administrative rayon service by one TsS for rural networks.

When necessary the IGIM or DGIM stages can set up calls by two digits of the zone number (ab).

The lines from the following are connected to the inputs of the IGIM stage: the RSLA_z systems for the intrazonal service, the IMGI bank for the incoming long-distance service, the RSLK 2/4 systems for access from the long-distance switchboards to the GAT and the TsS of the zone. Trunk groups to the groups of DGIM modules and trunks to the order-circuit ATS via the RSL_{sl} 4/2 matching systems are connected to the line bank of the IGIM stage.

The SLM line systems to the incoming message junctions UVSM of the 100-thousand groups of GATS and to the TsS of the rayons of its zone are connected to the line bank of the DGIM.

The line systems connected at the input of the VGI stage and the output of the DGIM stage are provided for three versions of the lines:

VKZSLG 2/4, RSLG 4/2 for the physical GATS lines;

VKZSLGU 4/4, IRSLGU 4/4 for the GATS lines organized over the transmission system channels with isolated signal channel;

the VKZSLT 4/4, IRSLT 4/4 for the intrazonal network lines organized over the transmission system channels with signaling in the talk frequency band (the VTA 4/4 and ITM 4/4 systems were used temporarily for this purpose).

When installing the individual converter bays with isolated signal channel SIP-VSK for the intrazonal network lines, the VKZSLGU 4/4 and IRSLGU 4/4 systems can be used.

The control signals (digits of the number dialed by the subscriber) are transmitted over the ZSL by the multifrequency method. Each digit is defined by a combination of two frequencies out of six (700, 900, 1100, 1300, 1500, 1700 hertz). The digital data on the required connection on the automatic long-distance or intradesignal service routings goes to the multifrequency code receivers PM and then is recorded by the IMRA_M or the IMRA_z registers. For this purpose the PM receivers are connected through the connecting system (SK) to the markers of the VGI stage (MVGI) and also the IMRA_M and IMRA_z registers.

The line interaction signals are transmitted over the long-distance channels by the two-frequency system using 1200 and 1600 hertz frequency combinations. The equipment includes the generators of these frequencies common to the office GTN and individual for each receiver channel PTN combined with the outgoing and incoming channel systems.

The digits of the number are transmitted over the long-distance channels and SLM from the AMTS to the GATS and the TsS of the zone using decade pulses.

For incoming or tandem service and also for service from the switchboards, the information about the zone (area) code is received by the incoming code register VRKSh connected to incoming systems (VKTN; RUK) through the relay connectors VK-VRKSh, RUK-VRKSh. The connectors VK-VRKSh have a capacity of 100 inputs, 20 intermediate lines and 15 outputs. When necessary the number of inputs can be increased to 300 using the attachment for 200 inputs. Each intermediate line services from 5 to 15 inputs. The diagram of the VK-VRKSh connector is shown in Figure 4.6.

The RUK-VRKSh connectors have a capacity of 50 inputs, 25 intermediate lines and 6 outputs.

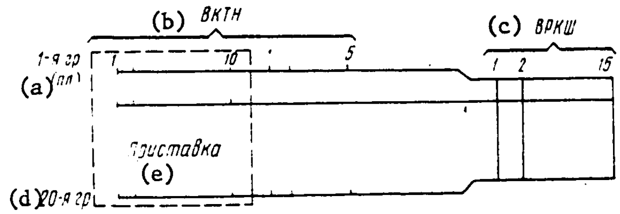

Figure 4.6. Diagram of the VK-VRKSh 100(300)-20-15 connector.

Key: a. first group (pl)
b. VKTN
c. VRKSh
d. attachment
e. 20th group

The PSh decoder selects the routing according to the information recorded in the IMRA$_{M}$ and the VRKSh registers. The decoder is connected to the registers via the RK-PSh connector.

The intrazonal service is realized via VGI and GIM stages directly, bypassing the MGI stage without participation of the decoder.

When developing the design of a specific office, the structural diagram must reflect the design solutions (having the corresponding equipment) regarding organization of all forms of external communications for the given office, in particular, joint operation with the semiautomatic service equipment, organization of communications with existing MTS in another building, and so on.

Initial Principles for Equipment Design

One of the most important initial principles for equipment design is the instrument service system and determination of the norms for the quality indices of their operation. Let us consider the basic office junctions from this point of view.

VGI Stage. The VGI marker is a one-line service system to which the simplest flow of calls passing through the module inputs comes. When the incoming system is busy, a request to connect a marker occurs. If the marker is busy the call waits until it is free.

In order to find a free line on the required routing the marker makes one, two or three tries depending on availability (20, 40 or 60). The busy time of the marker setting up a call with a single try is 0.9 second, a double try 1.0 second, and triple, 1,1 seconds. Studies have shown that in the single-line group with discrete distribution of the service time, when it can assume three values quite close to each other, the waiting time distribution function almost coincides with the distribution function with constant service time. Thus, from the point of view of estimating the service quality, the marker busy time can be considered constant.

The quality norms for operation of the marker are the waiting probability $P(\gamma > 2'') \leq 0.01$ and the average waiting time $\bar{\gamma} = 0,2$ second.

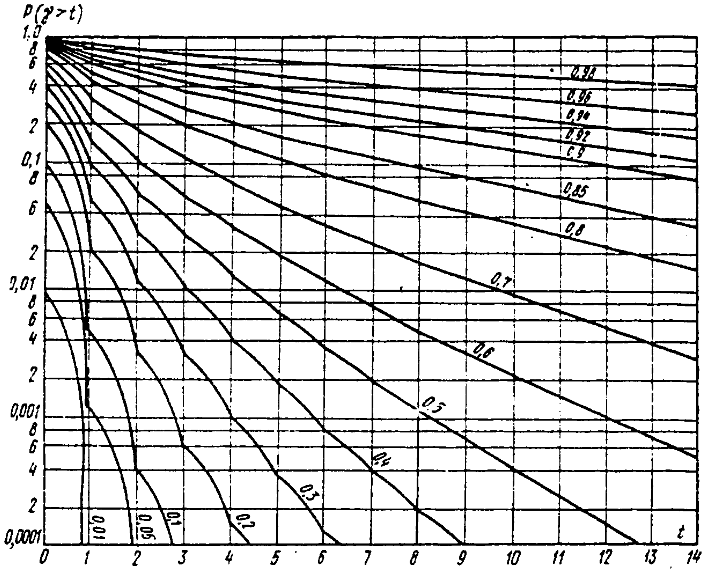

Figure 4.7. Burke curves for determining the probability $P(\gamma > t)$ for single-line systems.

In order to determine what load on the marker this norm corresponds to, the Burke curves are used for single-line systems (Figure 4.7) and the curves are used for determining the average waiting time with constant busy time (Figure 4.8). As is obvious from these curves, the average load on the marker for indicated quality is 0.28 Erlang.

The number of calls corresponding to the given load is determined beginning with the average busy time of the VGI marker for setting up one call. For the majority of cases it is possible to assume that 40% of the calls will be set up on a single try, 40% on a double try and 20% on a triple try. Then the average busy time of the marker for one call will be: $0,4 \cdot 0.9 + 0.4 \cdot 1,0 + 0,2 \cdot 1,1 \approx 1,0$ sec.

Thus, the average number of calls which one marker can service with given quality $B_M = Y_M \cdot 3600/T_M = 0.28 \cdot 3600/1,0 = 1000$.

The number of lines included in the switching bank of the VGI modules for each routing depends on the size of the incoming load and the average load for one input of the VGI stage. For calculation of the magnitudes of the loads on different types of systems with respect to servicing incoming calls it is necessary first of all to determine the average busy time of the systems for one call.

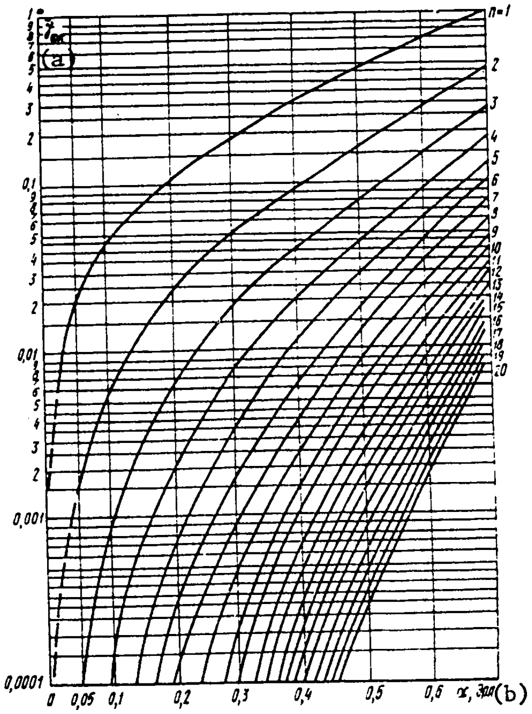

Figure 4.8. Curves for determining the average waiting time with constant busy time.

Key: a. γ_{wait}
b. α, Erlangs

For the $RSLA_M$ and $RSLA_z$ systems we begin with the average busy time of an outgoing channel for long-distance or intrazonal service for one call: $T_{B.M} = T_{p.a}/\Pi$. As was stated in section 3.2, the average talk time $T_{p.a} = 5.25$ minutes, and the number of attempted calls for one completed call, $\Pi = 2.5$. Consequently, $T_{B.M} = 5.25/2.5 = 2.1$ minutes.

During the process of setting up a call the $RSLA_M$ system is busied before the outgoing channel; therefore its busy time per call is somewhat greater than the channel, by approximately 10%. Thus, the average busy time of the $RSLA_M$ system for servicing one call $T_{RSLA_M} = T_{B.M} \cdot 1.1 = 2.31$ minutes. The load on the $RSLA_M$ systems is determined by the total number of calls sent to the outgoing long-distance channels for automatic service from the subscribers of the GATS and the zone TsS.

For intrazonal service the average busy time of the outgoing channel (SLM_z) for one call $T_{B.z} = T_{p.z}/\Pi = 4.25/2.5 = 1.7$ minutes. The average busy time of the $RSLA_z$ system $T_{RSLA_z} = T_{B.z} \cdot 1.1 = 1.87$ minutes. The load on the $RSLA_z$ systems is determined by the total number of calls sent from the subscribers of the GATS to the zone TsS and from the subscribers of the TsS to the GATS and other TsS of its zone.

For calculation of the load on the VKZSLK equipment we begin with the fact that these systems service calls going to the long-distance switch board operator for semiautomatic connection from the GATS and the zone TsS. Here it is considered that in accordance with the operating process only requests are received over the ZSL. Therefore the average busy time of the VKZSLK equipment corresponds to the request reception time, that is, $T_{ZSL_k} = 1.0$ minute.

The magnitude of the average load for one input of the VGI stage (a) is determined beginning with the total load which must pass through the stage and the calculated number of modules of the VGI (g):

$$a = (Y_{RSLA_M} + Y_{RSLA_z} + Y_{VKZSLK})/(60g).$$

The choice of accessibility in the switching bank of the VGI depends on the magnitude of the route load. For lines to the $RSLA_M$ and the $RSLA_z$ it is expedient to select the maximum accessibility -- 60 -- inasmuch as these routings will service all of the increasing load, and in the routing to the VKZSLK, in which the load is small and decreases with time, the accessibility can be selected minimal, that is, 20. In cases where in addition to the indicated routings other routings (for example, to other MTS of the city) must be connected to the VGI switching bank, when selecting the magnitudes of the accessibilities it is necessary to consider that their sum must not exceed 200, that is, the number of outputs in the switching bank of the VGI modules.

On the routings of the VGI bank, both fully accessible and incompletely accessible line groups can be formed. For completely accessible connection, the number of lines in the group is less than the accessibility or equal to it, that is, the load on the given routing is such that it can be serviced by the connecting units accessible to each input. For the incompletely accessible inclusion, the number of lines in the group exceeds its accessibility, that is, the load on the given routing is such that more connecting units are required than there are individual outputs on the routing for each module.

On the routings to the $RSLA_M$ and $RSLA_z$ as a rule the load is so large that it requires incompletely accessible connection of the lines; on the routings to the VKZSLK and the IKZSLK, completely accessible groups can be organized.

The number of lines on the routings of the VGI bank depends on the loss norm P and the number of loading groups g in addition to the routing load Y, the average load on the input a and the accessibility D. By the given parameters it is possible to determine the number of lines on each routing of the VGI bank [10]. Here it is necessary to consider the following fact. The number of lines on the routing with high load can reach significant values, sometimes exceeding 1000. Inclusion of such a large number of lines in the form of one common group from all of the VGI modules presents significant difficulties when installing and executing cross-connections. Therefore when calculating the number of lines on a routing with heavy load it is necessary to break down the load and the VGI modules, respectively, into several groups that are as equal as possible calculating that in each group the number of lines will be quite large (in order to insure high use of the group), but not exceed 200. The number of lines is determined separately for each group of modules; then the results with respect to all groups are summed, and the total number of lines to the corresponding systems is determined.

RI Stages. RSLA and UPF systems are connected to the inputs of the RI stages, and IMRA and UKP registers, to the outputs. The RI stage can contain several modules having common outputs to the registers. The number of RI modules in the group depends on the load, but it cannot exceed three for a total number of outputs of 30.

The group of RI modules having common outputs is serviced by two markers which operate in the mode with blocking, that is, each of them can be connected to any module of the given group, but both markers cannot service one module simultaneously. When the module input is busy, a request arises to connect the marker; if both markers are busy, the calls are placed on hold.

The total waiting time by a call for servicing is made up of the following: γ_M -- the waiting time by the module to which the call has come for connection of the marker; γ_{bl} -- the waiting time by the call for servicing in the module; γ_{reg} -- the waiting time as a result of blocking in the two-link system and absence of free registers. The average total waiting time is equal to the sum of the indicated average values.

As the norms for the quality indices of operation of the RI stage it is assumed that the average waiting time by a call for servicing must not exceed 0.19 second and $P(\gamma > 2'') \leq 0.006$. In order to satisfy these norms and also for arguments of operating reliability of the markers, the admissible use of a marker is 0.35 Erlang, which for $T_M = 0.7$ second corresponding to 1800 calls serviced by one marker. A total of no more than $2 \cdot 1800 = 3600$ calls should come to a group of RI modules.

Calculation of the RI stage consists in determining the number of RI modules, the number of MRI markers and the total number of registers subject to connection at the stage output.

The number of RI modules is first determined beginning with the number of sets connected to the inputs of the stage and the capacity of one module (100 inputs). The obtained number of RI modules is divided into groups, each of which is serviced by two markers. If the number of calls for one RI group, that is, for two MRI markers, exceeds 3600 calls, the number of groups and also the number of RI modules and MRI markers must be increased correspondingly.

The $RMRA_M$, $IMRA_z$ registers and the UKP systems are connected to the outputs of the RI stage fully accessibly, and in groups of no more than 30 instruments each (in accordance with the number of outputs of the RI stage). The number of $IMRA_M$ and $IMRA_z$ registers and also the UKP systems is calculated considering the magnitude of the load on these devices under the condition of satisfying the quality index norms for their operation.

The load on the $IMRA_M$ and $IMRA_z$ registers is determined beginning with the number of calls subject to servicing by these instruments and their average busy time servicing one call. For the $IMRA_M$ the average busy time for servicing one call is 18 seconds considering the tandem connections on the network. For the $IMRA_z$ for intrazonal service this time is 9.5 seconds. The norm for the operating quality indices of the registers is $P(\gamma_{reg} > 0) \leq 0.005$.

The load on the UKP systems is determined beginning with the total number of completed calls serviced by these instruments and the average busy time of the UKP servicing one call which is 10 seconds. The operating quality norm of the UKP $P(\gamma > 2'') \leq 0.05$.

Multifrequency Code Receivers. The $IMRA_M$, $IMRA_z$ registers and the markers of the VGI stage are connected to the multifrequency receivers through a connector. The connector is fully accessible, its capacity is 30 inputs and 8 outputs to the PM.

The servicing quality norm for the receivers is: $P(\gamma > 0.35'') \leq 0.002$. The average busy time of the PM servicing one call will be: 0.6 second from the MVGI, 2 seconds from the $IMRA_M$, and 1.8 seconds from the $IMRA_z$.

The number of connectors and receivers, respectively, required to include and service the MVGI, $IMRA_M$ and $IMRA_z$ is found by calculation. When determining the number of markers and registers which can be connected to the input of the connector, it is necessary to consider the following. The busy time of the PM when servicing the MVGI and the registers differ significantly. In the case of joint connection of the MVGI and registers to one connector, the waiting characteristics approach the waiting characteristics for exponential service time distribution (the probability of waiting more than a given time and the average waiting time by comparison with conditions of constant service time increased). By these arguments it is desirable to connect the MVGI and the registers to the inputs of different connectors.

For satisfaction of the service quality norms it is possible to connect either 25 MVGI or 30 registers to the input of one connector. Eight PM are connected to the outputs in both cases.

During assembly of the connector inputs it can become necessary to have a common connector for connecting the registers and markers to the eight PM. In this case the service quality norm is satisfied with a ratio of a maximum of up to 5 MVGI, 12 $IMRA_M$ and 10 $IMRA_z$.

VRKSh Registers and Connectors to Them. The load from the long-distance incoming channels come to the VRKSh registers through relay connectors for automatic and semiautomatic service and also from the long-distance switchboards for outgoing semiautomatic service. The average busy time of the VRKSh servicing one call depends on the type of call, and it is expressed in the following values, seconds:

for incoming automatic calls (reception of information from the register)	1.1

for incoming semiautomatic calls (reception of information from the number dialer)	3,0
for tandem calls	9,5
for outgoing semiautomatic calls	11,0

As a result of significant differences in the busy time of the VRKSh for different types of calls, two types of connectors are provided; VK-VRKSh and RUK-VRKSh.

Primarily the sets of incoming long-distance channels VKTN are connected to the inputs of the VK-VRKSh connector, In the case where joint operation with another MTS in the given city has been planned for, the incoming sets of lines for inter-office tandem connection VKSh are connected to the connector input, The service quality norm of the VK-VRKSh connector is the value $P(\gamma > 2'') \leq 0,08$.

The register busy time is 1,1 seconds for incoming automatic terminal calls; for incoming semiautomatic terminal calls it is 3 second; for tandem calls 9 seconds. The average busy time of the VRKSh (T_{ave}) is defined as the rated mean value as a function of the ratio of the types of calls The values of the admissible load on the intermediate line Y_{inter} and the connector VK-VRKSh for three values of T_{ave} are presented in Table 4,1.

When it is necessary to service a load exceeding the admissible load by one call, several connectors are defined with their own groups of VRKSh registers.

The RUK systems used for outgoing semiautomatic service are connected to the inputs of the RUK-VRKSh connector. The service quality norm is assumed to be $P(\gamma > 2'') \leq 0.05$. For satisfaction of this norm the load on the connector should not exceed 1.5 Erlangs.

Table 4,1

T_{ave}, sec	Y_{inter}, Erlangs	$Y_{VK-VRKSh}$	Number of VRKSh
1,1	0,35	7,0	15
2,0	0,182	3,64	10
3,0	0,142	2,34	9

MGI Stages. Information is received over the routing to the MGI by six RGI registers, each of which is attached to ten inputs of the module, The input to the modules of stage IMGI are busy independently of the presence of free and accessible RGI; therefore for busy RGI the call must wait for its release.

The operating quality norm of the RGI is the value of $P(\gamma > 1'') \leq 0,002$. The average busy time of the RGI for one call is 1.0 second, In order to satisfy the service quality norm the load on one register must not exceed 0,056 Erlang, Considering that one RGI services ten inputs of a stage, the admissible number of calls per input will be $B_{1\ inp} = Y_{1\ reg} \cdot 3600/(T_{RGI} \cdot 10) = 0,056 \cdot 3600/(1 \cdot 10) = 20$,

The magnitude of the average long-distance load for one input of the IMGI stage is determined beginning with the admissible number of calls (20) and the average busy time of the long-distance channel per call $T_{B.M} = 5.25/2.5 = 2.1$ minutes:$Y_{1\ inp\ MGI} = B_{1\ inp}T_{B.M}/60 = 20 \cdot 2.1/60 = 0.7$ Erlang.

Thus, the average load per input of the IMGI must not exceed 0.7 Erlang not only from the arguments of optimal carrying capacity of the modules, but also as a result of the necessity for observing the quality norm for the RGI.

When calculating the number of lines on the routings of the IMGI bank usually the following accessibilities are selected: to the IGIM stage where the heavy load is directed, D = 60, and on the routings to the groups of modules IIMGI, D = 20. Here, within the limits of the capacity of the line bank of IMGI modules (200 outputs) a maximum of up to seven routings can be organized to the groups of IIMGI modules. The loss norm on the lines in the directions from the bank of the IMGI to the IGIM and IIMGI is P = 0.002.

The number of lines in each routing of the IMGI bank is determined (analogously to the VGI stage) as a function of the load time on the given routing Y, the average load on the stage input a, accessibility D, loss norm P and number of load groups g. However, in the process of this calculation, some peculiarities of the following (after the IMGI) finder stages must be taken into account. In particular, when determining the number of lines on the routing to the IGIM, it is necessary to consider the following: each IGIM module is serviced by one marker, and for reception of information about the call routing it contains RGI, each of which services ten inputs. The circuit diagram for connecting the marker and registers to the inputs are the same as in the MGI stages. The difference is that the inputs in the group are busy only when the register servicing this group is free. If the register is busy, then the free inputs of the group serviced by it are blocked from busying them on the part of the preceding finder stage. In order to satisfy the service quality norm and compensate for blocking, the number of lines from the preceding finder stage, that is, from IMGI must be increased correspondingly (by about 5%).

When calculating the number of lines on the routings from the line bank of IMGI to the groups of IIMGI modules, it is necessary to consider that the outputs of the IIMGI have the outgoing long-distance channels to other AMTS connected to them. Here the groups of long-distance channels are organized in two versions: 1) on the direct routings to other offices and 2) via the UAK or the AMTS performing the functions of the UAK. As the loss norms for the long-distance channels, P = 0.01 is adopted. For group finding in a two-link module the total losses consist of two parts: the losses on the lines P_ℓ and the losses to blocking as a result of the fact that the intermediate paths are busy P_{bl}, that is, $P = P_\ell + P_{bl}$. For direct channels $P_\ell = 0$, for in the absence of free channels on the direct routing the decoder directs the call to alternative trunks. Therefore in the modules which include the direct routing channels, it is possible to permit losses to blocking of 0.01. For the bypass routings the losses in the channels and to blocking must be a total of 0.01.

In connection with the fact that the layout of the AMTS-3 provides for controlling the setting up of a call by the finder stage modules, when the intermediate paths in the stage IIMGI are busy, it is impossible to transmit a call to another group of IIMGI modules. As a result, significant losses arise from internal blockings. In order to reduce these losses it is necessary artificially to increase the collectedness parameters and the expansion coefficient in the IIMGI stage. In order to double the connectedness, each outgoing channel is connected to two points of the IIMGI bank, and in order to increase the expansion coefficient, the admissible magnitude of the average load to one input of the IIMGI modules is reduced.

The necessity of busying two points of the line bank for each channel creates definite restrictions on the capacity of the AMTS-3. No more than 200/2 = 100 channels can be connected to each of the seven groups of IIMGI modules, and the maximum number of outgoing channels cannot exceed 7·100 = 700. Hence, the total capacity of the office will be 700 outgoing + 700 incoming = 1400 long-distance channels.

For different groups of channels with respect to capacity, the values of the available average magnitude of the load reaching the input of the IIMGI module are different. For modules which include high-use direct groups, the values of this load are presented in Table 4.2.

The high-use direct groups are connected to individual groups of IIMG modules, that is, to individual routings from the IIMGI bank. Here it is necessary to strive to have identical or similar groups with respect to capacity connected to each group of modules.

Table 4.2.

Number of channels in the group	6	12	18	24	30
Load, Erlangs	0.26	0.31	0.34	0.35	0.4

On the bypass routings the channel groups are connected to individual groups of the IIMGI modules. For these modules the load on the entrance is not rigidly limited. The maximum capacity of such a group connected to one group of modules will be 30 channels (for maximum accessibility of 60). If there are more than 30 channels on the bypass routing, the channels of this routing are divided into 30-channel groups which are connected to different groups of modules. All the channels of the direct and bypass routings are included in the IIMGI bank fully accessibly.

IGIM and DGIM Stages. The operating conditions of the GIM stage are such that the calls through it must be set up during the interseries time of 0.5 second. Therefore for proper setting up of a call it is necessary that the busy time of the marker T_M be sufficiently small, and the waiting time by the register for the marker not exceed $T_{wait} = 0.5-0.06-0.1-T_M$. Here 0.06 second is the time of lengthening of the last pulse in the series as a result of operation of the VKTN corrector; 0.1 second is the release time of the series relay in the register.

The improved diagram of the marker of the GIM stage (GIM-3), in contrast to the initial I/IIGIM layout permits a call to be set up not only with a single try, but also with double and triple trials. The busy time of the marker for a single trial is 0.145 second, for double trial it is 0.16 second, and for triple, 0.18 second. Here the waiting time must not exceed 0.195, 0.18, and 0.16 second respectively. On the average the marker busy time is equal to its busy time for a double trial. The admissible servicing quality for the IGIM marker is determined by the value of $P(\gamma > 0{,}18'') \leq 0{,}001$. The average load per input of the module must not exceed 0.6 Erlang. With this load, $B_{MGIM} = Y_{inp} \cdot 60 \cdot 60/T_B = 0.6 \cdot 60 \cdot 60/2.1 =$ 1000 calls come to the marker of the IGIM module. The load on the marker is $Y_{MGIM} = 1000 \cdot 0.16/3600 = 0.0445$ Erlang.

All of these arguments also pertain to markers of the DGIM stage. The inputs to the DGIM stage are busied under the condition of the presence of free RGI of the DGIM stage.

CHAPTER 5. DESIGN OF THE AMTS-4 AND AMTS-4 TYPE UAK

5.1. General Remarks

The AMTS-4 type AMTS and UAK equipment has been developed fully in accordance with the requirements of the national system for automated telephone communications of the country, and it is basically designed for terminal offices, but it can be used as a terminal-tandem office before putting the corresponding UAK into operation.

5.2. Operating Capabilities of the Office

The AMTS-4 and UAK equipment is a mechanoelectronic office in which the switching of the talk channel is realized on crossbar connections, and the control units, of the electronic type.

In addition to the automatic method of communications the AMTS-4 office offers the possibility of semiautomatic servicing of long-distance calls which can be made using switchboards of both the cordless and cord types.

The electric parameters of the equipment are designed for the possibility of using channels switched to the AMTS-4 and UAK not only for telephone communications, but also for transmitting facsimile, phototelegraphic messages and digital data at speeds of 600 and 1200 baud.

The structure of the AMTS-4 and UAK is a united four-link switching system which is made up of symmetrically arranged two-link MKS modules. All types of channels and lines are connected to the line banks of these modules: the incoming and outgoing long-distance channels are connected to the UAK, and in the AMTS-4, in addition, there are communication lines with local city and rural networks and also when necessary, interfacility lines for connection to other city MTS.

Setting up calls in the switching system is accomplished by a single-line system making use of a common electronic marker and decoder interacting with the register equipment. For matching the operation of the high-speed electronic marker with the cross bar connectors, the memories ZU of the modules are used, where each module is serviced by individual ZU. The structural connection of the marker to the registers imposes restrictions on the total number of registers which must be no more than 900.

Basically the 400-400-400 type modules (400 points of a line bank, 400 intermediate lines and 400 intermodule lines) and partially 200-200-200 are used in switching systems. The maximum number of modules of an office is 15 incoming and 15 outgoing, that is, the number of points of the line bank can be up to 6000 incoming and 6000 outgoing. The minimum number of modules must be no less than two incoming and two outgoing which is necessary for uninterrupted operation of the office.

The capacity of the AMTS-4 is limited by the carrying capacity of the control units. Calculations performed using computer simulation demonstrated that under the condition of satisfying the norms of the quality indices, the marker can service no more than 70,000 calls in the PLH. Beginning with this fact, the total admissible load to the office which in practice permits us to obtain an office capacity of no more than 4000 incoming and 4000 outgoing channels and lines is determined.

The research performed by the TSNIIS established that fulfillment of the last norms for internal blocking (P = 0.002 to 0.003) is insured with an average load on one switching bank point of no more than 0.6 Erlang, that is, with a load on the 400-400-400 module of no more than 240 Erlangs, and for the 200-200-200 module of no more than 120 Erlangs.

In contrast to the AMTS-2 and AMTS-3, the equipment of the AMTS-4 decoder permits analysis not only of the three digits of the long-distance code ABC, but also two digits of the intrazonal numbers -- ab(ABCab), which is necessary for access to the zone where several AMTS are located. The layout of the decoder permits connection of up to 240 outgoing routings to the office. Here automatic setting up of a call on a direct routing is possible, and when it is busy, over one of the four bypass paths.

The distinguishing feature of the AMTS-4 by comparison with the AMTS-2 and AMTS-3 is also the possibility of predominant servicing (priority) of calls coming from subscribers of individual categories. The "priority" subscribers are serviced by the system with limited waiting with outgoing, incoming and tandem calls. The remaining subscribers are serviced with incoming and outgoing calls by the system with rejects, and only for tandem calls, with limited waiting. Priority is possible only for subscribers of the ATS at which the AON equipment is installed. Provision is made for the possibility of segregated priority servicing of up to 120 lines of direct subscribers connected to the cord type direct subscriber switchboard.

The central instruments of an office -- marker, decoder, waiting equipment -- are redundant.

The AMTS-4 and UAK equipment is designed for technical servicing by the monitor-correcting method. In order to maintain a given operating quality of the equipment, provision is being made for automatic monitoring and testing equipment KIA at the office which provides for the following:

continuous monitoring of the condition of the control units;

statistical monitoring of the entire set of office equipment;

checking the group (registers) and individual (line systems) equipment on the basis of the results of statistical monitoring;

checking the control units using special KIA programs based on the continuous monitoring results;

self-monitoring of the KIA and segregated register adapters.

The results of the monitoring and testing are printed out at the KIA work place. The causes of failure messages are determined and eliminated from the results of analyzing the messages.

The automatic equipment for calculating the load AUN and the equipment for monitoring service quality AKK which is part of the AMTS-4 and UAK permit data to be obtained for optimal prospective planning of the development of long-distance and intrazonal networks. Using the AUN, the number of calls distributed by the ABC and ABCab codes is determined in order to establish the uniform gravitations from the given office, and the number of busies and channel, line and station instrument loads are determined to check the correspondence of the number of line systems, group and general office instruments installed at it by the calculated data and monitor their performance during operation. The AKK equipment continuously monitors the percentage of rejects as a result of busy channels and waiting equipment AO on each routing of the last-choice path. In addition, the AKK periodically monitors the percentage of calls separately from priority and nonpriority subscribers waiting for the release of AO more than a fixed time. On the basis of this continuous monitoring with respect to each last choice path PPV, two states of violation of the service quality norm are noted:

1) the service quality norms for priority and nonpriority calls are violated;

2) the service quality norms are violated only for nonpriority calls.

Signals of the occurrence and expiration of these states are transmitted to the zone monitoring station PKZ and the main dispatcher monitoring station of the country GDPK for making decisions to maintain a given service quality.

For organization of intraoffice and interoffice order-circuit service at the AMTS-4 and UAK provision is made for an order-circuit crossbar ATS of the ATS K-100/2000 type. The maximum capacity of the order-circuit ATS is 900 numbers. The order-circuit ATS subscribers -- supervisory and duty technical personnel -- have access through the switching system of the AMTS (UAK) to the long-distance telephone network channels. The intraoffice service between order-circuit ATS subscribers is realized appart from the switching system of the AMTS (UAK).

5.3. Structural Diagram of the AMTS-4 and UAK

In the diagram in Figure 5.1, the boldface lines indicate the office elements which are common to the AMTS-4 and UAK, the fine lines depict the elements belonging only to the AMTS-4. As is obvious from the diagram, the UAK includes the following devices:

the line systems of the long-distance channels with single-frequency (VKTS, ITKS) and two-frequency (VKTNA, IKTNS) signal systems and also the incoming systems from the order-circuit ATS (VKS);

the switching system KS consisting of the incoming AV and outgoing SD modules;

the storage elements of the AU-AV and the ZU-SD modules;

the marker M;

decoder P;

waiting equipment AO;

registers: tandem TR, incoming matching VSR, order circuit SR, outgoing matching ISR;

the register finding stage RI;

connecting sets of registers RSP.

The AMTS-4 office contains the following devices in addition to the equipment standardized with the UAK:

the ZSL and SLM line equipment for communications with the GATS and TsS of its zone;

the trunk equipment for connection to other MTS of the city (if necessary);

the line equipment of the trunks for connection with the cord type switchboard equipment located in the same building (RUSK, IKZM) or another building (VKMS, IRKUK);

the cordless type switching equipment;

registers: outgoing IR, matching semiautomatic service PSR, RI stage and connecting systems RSP;

charge calculating equipment AUS;

device for data request and reception from the AON (UZPI).

Each version of the registers performs its own basic functions. The tandem register TR services the tandem and terminal incoming calls and is connected to the incoming systems of the long-distance channels with single-frequency signal system VKTS. Analogous functions are performed by the incoming matching register VSK, but with respect to the two-frequency system channels, and it is connected to the incoming systems of the VKTNS. The incoming matching register ISK is connected to the outgoing IKTNS systems of the long-distance channels with two-frequency signaling system.

The outgoing register IR services the outgoing terminal calls; it is connected to the ZSL equipment and connected to the AUS and the UZPI. In contrast to the AMTS-2 and the AMTS-3, the outgoing automatic call is setup without using intermediate registers at the ATS. The number information is sent from the ATS instruments directly to the AMTS register. Accordingly, the receiving part of the AON equipment -- the UZPI system -- is installed at the AMTS.

The matching semiautomatic service register PSR services calls set up semiautomatically. These registers are connected to the incoming RUKS and VKMS systems of the long-distance cord type switchboards or the switchboard positions URM of the cordless switchboards.

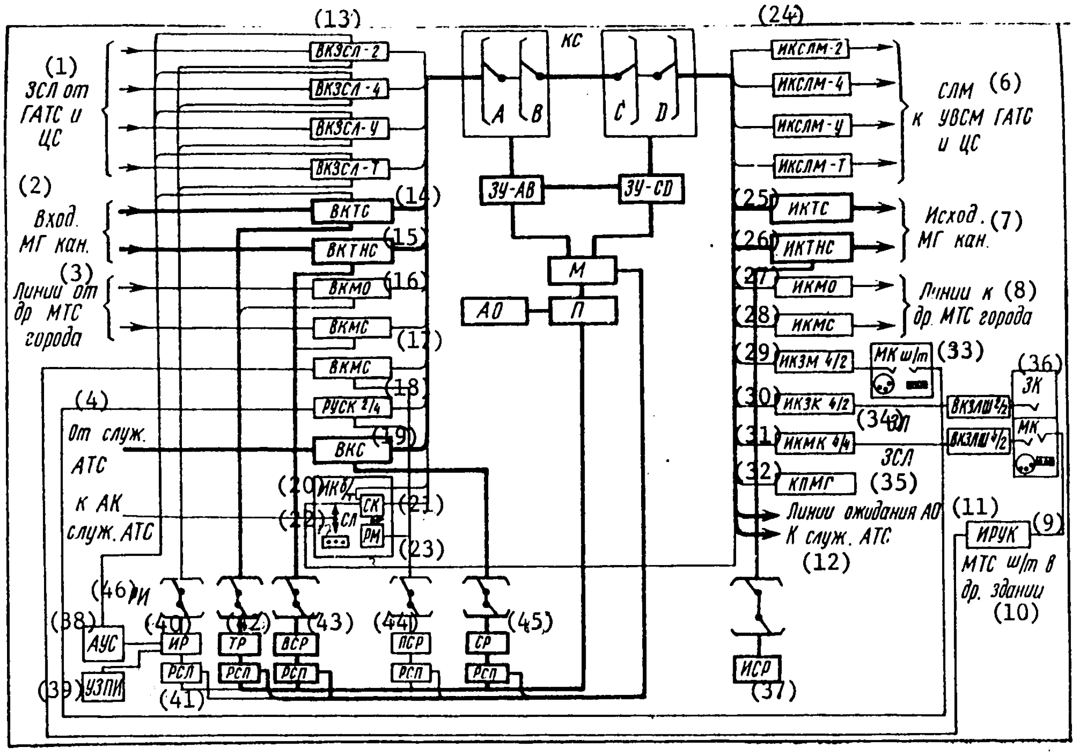

Figure 5.1. Structural diagram of the AMTS-4 and UAK.

Key:
1. ZSL from GATS and TsS
2. input MG channel
3. lines from other MTS of the city
4. from the order-circuit ATS
5. to the AK of the order circuit ATS
6. SLM to the UVSM of the GATS and TsS
7. outgoing MG channel
8. lines to other MTS of the city
9. IRUK
10. MTS in another building
11. waiting lines AO
12. to the order-circuit ATS
13. VKZSL-...
14. VKTS
15. VKTNS
16. VKMO
17. VKMS
18. RUSK 2/4
19. VKS
20. MKb/T
21. SK
22. SL
23. RM
24. IKSLM-...
25. IKTS
26. IKTNS
27. IKMO
28. IKMS
29. IKZM 4/2
30. IKZK 4/2
31. IKMK 4/4
32. KLMG
33. MK b/t
34. ZL
35. ЗSL
36. ZK
37. ISR
38. AUS
39. UZPI
40. IR
41. RSL
42. TR
43. VSR
44. PSR
45. SR
46. RI

The memories ZU-AB and ZU-CD are each attached to one module and just as the modules, they are connected to each other by the "each-to-each" principle. They are used to match the operation of the MKS of the module with the high-speed electronic marker.

The marker M, decoder P and waiting equipment AO connected to it make up the basic control units of the office.

The lines to the order-circuit ATS, the waiting lines AO and the recorded voice equipment KPMG are connected without line switches to the switching bank of the link D of the outgoing module.

When using cordless switchboards, the lines are connected directly from the universal connecting equipment USK of the switchboards to the switching bank of the incoming modules.

5.4. Setting up Calls

Outgoing Automatic Calls on the Long-Distance Channels. For establishment of automatic service with a subscriber of another zone, the subscriber A of the ATS equipped with AON equipment dials the prefix for access to the AMTS "8" and the ten-digit long-distance number of the called subscriber B. After dialing "8" the subscriber line is connected to the outgoing equipment of the ZSL, from which the busy signal is sent in the direction of the VKZSL at the AMTS by the battery or frequency method depending on the type of ZSL.

If the VKZSL is busy, a free outgoing register IR is connected to it via the RI stage. A special notice of the presence of AON equipment at the ATS is sent from the set to the register electrically. The outgoing register busies the UZPI, receives the resistance AON interrogation signal from it and relays it to the VKZSL. The resistance signal requesting information from the AON is converted by the VKZSL line equipment in accordance with the method of transmitting line signals of the given type of ZSL, and it is transmitted to the ATS.

The IR register connects the lines between the VKZSL and the UZPI, over which a frequency information request signal is transmitted from the UZPI to the AON. Receiving this signal, the AON dispatches information on the category and number of the calling subscriber A by the multifrequency method by the "2 out 6" code using the "no-interval packet" method. In the IR register this information is received from the UZPI by the resistance method by the "2 out of 5" code. A buzzing signal that the AMTS equipment is ready to receive information about the number of the called subscriber B is sent to subscriber A from the register. The register IR receives information about the number of subscriber B. After completion of recording of the long-distance number (ten digits) the IR busies the automatic charge computing equipment AUS. The information about the numbers of subscribers A and B is output by the register IR to the AUS in four steps. After dispatching information to the AUS, the IR register is disconnected from the AUS and calls the decoder.

On the basis of this call the marker M selects the calling register IR which by a signal from M is connected through the RSP to the decoder. The IR register outputs the required information to the decoder (five digits of the long-distance number) which determines the outgoing routing (direct or bypass) and it outputs a notice to the free incoming equipment of the selected routing. The marker M selects one of the free paths from the VKZSL to a free outgoing routing and transmits information about the selected path to the module memory. After selection of the path the decoder transmits information about its method of operation in the further phase of completing the call to the IR based on the "path selected" signal received from the marker. Then the decoder and marker are released.

Under the control of the ZU-AB and the ZU-CD, the MKS of the A, B, C and D links of the switching modules connect the path from the VKZSL to the outgoing equipment of the required routing. The latter is busied and sends a busy signal over the long-distance channel to the next AMTS or UAK. The IR register receives the frequency request signal from the register of the next office and transmits information about the category of the call and the number of subscriber B to it by the multifrequency procedure "2 out of 6" code by the "pulse packet" method. After reception of the signal of correctness of reception of all of the transmitted information from the register of the next office, the IR is released.

In the absence of AON at the ATS, notice of absence of the AON is transmitted to the register after busying the VKZSL and connection of the register from the system to it. A buzzing signal that the AMTS instruments are ready to receive information is sent to subscriber A from the register. After receiving and recording the information about the numbers of subscribers A and B, the register IR is connected to the decoder and transmits the information required to set up the long-distance call to it, and a signal to check correctness of the number dialed when the subscriber A is dialing his own number to the subscriber A. In the case of positive results from checking, his IR busies the AUS equipment and transmits information to it about the numbers of subscribers A and B. After completion of the interaction with the AUS, the decoder is again busied, and information is transmitted to it to set up the call to subscriber B.

In the absence of free paths from the VKZSL to the free outgoing equipment, a special signal is fed to the IR from the decoder, by which the register releases the decoder and marker, and after some time (about 100 milliseconds) again connects to the decoder for a repeated try at setting up the call. In case of rejection as a result of absence of a free signal in the required direction, for priority calls the decoder transmits a signal to the IR to set up the call for waiting and busies the waiting system (via the switching system). The IR register connects the "please wait" recorded message to the line of subscriber A. For nonpriority calls the decoder transmits the "busy" signal to the register, on which the IR must be released. In the waiting equipment AO which is constantly connected to the decoder, the required information is present about the waiting calls (the routings on which the waiting calls are being held and the categories of the waiting calls).

When the channel becomes free on the routing of the AO waiting, the signal is transmitted via the waiting line and switching system to the waiting register IR that it must again call the decoder. If several registers are waiting for the given routing to become free, service priority is given to registers with priority calls. The IR register, receiving a signal, again calls the decoder, breaks the connection via the switching system to the waiting line and is connected to the decoder.

At the time of connection of the waiting IR to the decoder (using the marker M and the register switch RSP) further completion of the call is realized analogously to the normal call via an office (without waiting).

On arrival of the "subscriber B answers" or "busy" signals from the channel during the setting up of a call and also after completion of the call on arrival of the "ring-off" signal, the VKZSL system transmits a signal to this effect to the AUS equipment.

For service over the channels with AMTS-2 and AMTS-3 operating by the two-frequency system, the AMTS-4 has outgoing matching registers ISR which receive information from the IR by the multifrequency method and transmit it to the AMTS-2 or AMTS-3 by the decade method in two steps by the "transmit code" and "transmit number" signals.

After receiving the ring-off signal, processing of all the information and determination of the charge for the call begin. All the accumulated data, including the length of the call are transmitted to the AUS recorders.

Incoming Long-Distance Calls. Automatic and semiautomatic incoming calls depending on the type of office where they originate, are set up through different incoming systems and registers. The calls from like offices (AMTS-4 or ARM-20) are set up through the VKTS systems operating by the single-frequency signal system. Here, a tandem register TR is connected to the VKTS equipment, and its interaction with the decoder and marker of the switching system takes place just as in the case of the outgoing service with the IR.

The calls from AMTS-2 and AMTS-3 over the long-distance channels are set up via the VKTNS equipment with the participation of the incoming matching registers VSR which receive information from these offices by the decade method in two steps by the "transmit code" and "transmit number" signals. Information is transmitted from these registers by one of three methods depending on where the call is going: the decade, multifrequency by the "pulse packet" method or multifrequency by the "pulse shuttle" method.

In the absence of free trunks to the ATS of its zone, the setup for waiting is done only for calls of the priority category.

Automatic Intrazonal Connection. For setting up an automatic call within his zone, subscriber A dials "8" for access to the AMTS, "2" (the intrazonal service prefix) and the seven-digit number of subscriber B. In the absence of AON, subscriber A dials his own number. Further setting up of the call takes place just as with automatic long-distance service.

Semiautomatic Long-Distance Calls. This form of call is set up from long-distance switchboards of the no-delay system MKNS and the cordless long-distance switchboards for delay-basis outgoing calls MKIZS. At each switchboard position there are six universal connecting systems USK. The answering sides of the USK are connected to the line bank of the incoming and outgoing modules of the switching system. The calling sides of the USK are connected only to the incoming points of the line bank.

Calls from subscribers go to the answering side of the USK. For connection to the MKNS, subscriber A dials the prefix "8" and the two-digit code of the MKNS. At the AMTS, the VKZSL and IR are busied. The register is connected to the decoder and transmits information to it about the category of subscriber, the MKNS code and "end of dialing."

In the case where there is a ready switchboard position, the call is setup from the VKZSL to the selected USK; if there are no free switchboard positions, the call is put on hold, and a light indicating the presence of waiting calls lights on the MKNS. To make a switchboard position ready it is necessary to throw the "answer " and "ready to receive call GPV" switches which provides for marking the free point of the bank in the ZU-SD and sending the notice to the transmitter of the presence of ready switchboard positions on the routing. The switchboard positions of the MKNS are divided into two groups: one group services subscribers of the priority category, and the other group, the remaining subscribers.

After busying the USK, the information request signal is sent from the switchboard position of the URM to the IR. The register receiving the request transmits the category and number of subscriber A to the USK by the "pulse packet" method. In the case of absence of AON, the IR register sends information about the provisional category and provisional number of the subscriber. After receiving this information a signal confirming reception is sent to the IR. The telephone operator, answering the subscriber, proceeds with setting up the call. Throwing the "dial B" switch feeds the request to the RI to connect the semiautomatic service register PSR. After connecting the PSR the dial light on the call side of the LNV lights up at the switchboard position. The telephone operator dials the code and number of subscriber B. The notice of the call priority is transmitted to the register automatically when it is busied.

The PSR register connects the decoder which marks the routing. If there are no free outgoing channels the priority MKNS are connected to the waiting system, and nonpriority ones receive a "busy" signal. The talk channel in the USK is connected to dispatch the dial digits from the PSR to the register of the next office. After receiving the signal confirming correct reception, the register is disconnected from the URM. The ring-off light OLV lights up on the switchboard.

On connection to a free subscriber line the telephone operator hears the call sending monitoring signal. If the subscriber line is busy with a local call, the OLV light blinks and the call can be heard; if the line is busy with a long-distance call, the OLV light blinks and a "busy" buzzing signal is heard. After the subscriber B answers, the OLV light goes off, and it lights again on ring-off.

A call is set up with subscriber A on the MKNS and MKIZS over the SLM trunk via the answering side analogously to setting up a call on the long-distance channel.

Communications with Order-Circuit ATS. An outgoing call from a given AMTS-4 office to subscribers of the order-circuit ATS of other TMTS and UAK is set up via the VKS system and the switching system of the AMTS using the SR register over ordinary long-distance channels. The interaction of the instruments of the switching system, the RI stage and the line switches takes place just as when setting up ordinary long-distance calls, but without connection to the charge computing equipment.

The incoming calls from other AMTS and UAK to subscribers of the order-circuit ATS of the given office pass through the switching system and the special RSLV equipment which forms part of the order-circuit ATS which is connected to the switching system of the AMTS-4.

Calls to the controlled KIA (KIA-2) are set up via the order-circuit ATS with remote measurements and testing of the long-distance channels and line equipment. For this purpose, the order-circuit ATS has a special switching stage GI-KIA, the outputs of which are connected to the KIA-2 systems.

Communications with the services of the switchboard shop and other AMTS services and also with the GTS information service are organized with the order-circuit ATS via a special stage $GI_{information}$.

Servicing Direct Subscribers. For servicing segregated direct subscribers it is proposed that the existing sets of direct subscriber lines connected to the cord type switchboard equipment be used. For incoming calls the direct subscriber lines are connected to the order-circuit ATS. For outgoing service the direct subscriber lines are connected to the cord type switchboard equipment entering into the AMTS-4. Special jacks for the priority systems RUSK are allocated on the cord switchboards if the cord switchboard is in the same building with the AMTS, or IRUK sets if the cord switchboard is in another building. The RUSK and VKMS equipment must send notice of a priority call to the PSR and VSR registers.

The direct subscriber cord switchboards are located in the AMTS building.

5.5. Description of Basic Types of Office Equipment

Line Equipment

The line equipment of the ZSL and SLM provided for communications with local telephone networks are in four versions used depending on the type of lines:

VKZSL-2, IKSLM-2 for physical three-wire lines;

VKZSL-4, IKSLM-4 for physical four-wire lines;

VKZSL-U, IKSLM-U for transmission system channels with segregated signal channel;

VKZSL-T, IKSLM-T for transmission system channels without segregated signal channel.

All the ZSL equipment interacts with the registers via the RI stage and also with the AUS and AUN equipment.

The interfacility line systems VKMO and IKMO are used for communications with the AMTS-4 or ARM-20 in the given city over the physical four-wire lines. The interaction signals are transmitted via the midpoints of the transformer over a single-frequency signal system.

Using the VKMS and IKMS systems, communications are organized with the AMTS-2 or AMTS-3 of the given city. The interaction signals are transmitted over a two-frequency signal system. The indicated systems can be used both for tandem calls between facilities and for outgoing semiautomatic service from the cord type MTS.

The relay-repeater matching equipment RUSK is designed to organize semiautomatic service via the AMTS-4 from the long-distance switchboards of the cord type MTS of the MRU installed in the same building with the AMTS-4. In this case a key pulser must be installed on the long-distance switchboard MK. The RUSK system interacts with the PSR. Information is output to the register by the multifrequency method using a key pulser on the MK. The RUSK input is connected to the bank of the switchboard of the cord MTS of the MRU over the two-wire talk channel system, and the output, to the incoming point of the line bank of the switching modules by the four-wire system.

The outgoing relay-repeater equipment IRUK is designed to organize semiautomatic service from the cord type MK installed in another building. On the incoming end the interfacility line is connected to the VKMS system of the AMTS-4. The interaction signals are transmitted by direct current. The number information is dispatched by the multifrequency method using the key pulser on the long-distance switchboard. The six-frequency oscillator systems are placed in common frames with the IRUK systems.

The outgoing sets of interfacility recording trunks IKZK 4/4 provide service with the cord type MK installed in another building. On the incoming end of the ZSL, VKZSLSh4/2 must be installed. For reliable operation, the resistance of each wire of the interfacility ZSL must not exceed 1000 ohms; the insulation resistance between the wires with respect to ground must be no less than 150 kilohms. The potential difference on the interfacility ZSL is 8 volts. The interaction signals are transmitted over the midpoints of the transformers by signal code adopted for the AMTS-4 offices.

The outgoing sets of interfacility recording trunks IKZK 4/2 are designed for coupling the AMTS-4 over physical two-wire lines with the delay-basis switchboards of the cord type MTS located in another building. On the incoming end of the recording trunk an VKZLSh 2/2 must be installed. The four-wire input of the IKZK 4/2 is connected to the outgoing point of the line bank, the two-wire output to the physical interfacility recording trunk with the parameters: the resistance of each wire of the physical line, no more than 1000 ohms; insulation resistance with respect to ground and between each other, no less than 150 kilohms; potential difference with respect to ground is 8 volts.

The outgoing IKZM 4/2 systems are designed for coupling the AMTS-4 to the long-distance switchboards of the cord type MTS located in the same building with the AMTS-4. The four-wire input of the IKZM 4/2 is connected to the outgoing point of the line bank, and the two-wire output, to the MK bank. The IKZM 4/2 system transmits and receives interaction signals from the MK by direct current. The system permits tandem calls to be set up with manual service channels connected to the cord type MK.

Switching Modules

In the AMTS-4 and UAK two types of switching modules are used: 400-400-400 and 200-200-200. This provides for economical assembly of offices of various capacities.

The group formation diagram of the module is presented in Figure 5.2. A three-position crossbar connector MKS 10 × 20 × 6 providing for four-wire switching of the talk channel is used as the switching element. The basic element of the link is the switchboard consisting of two MKS. Within one link the switchboards are

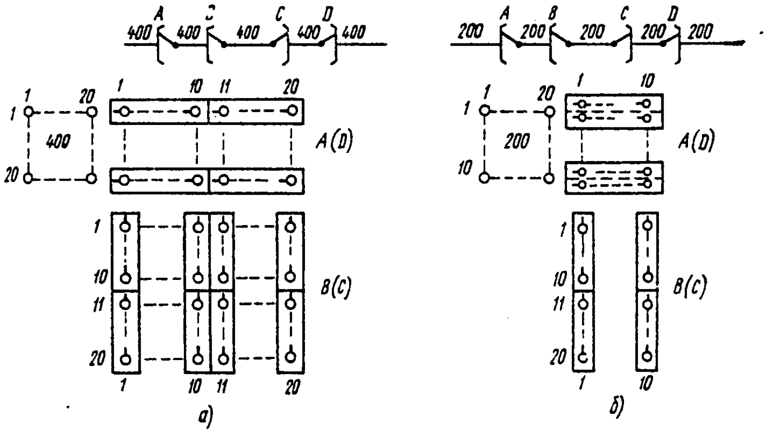

Figure 5.2. Group formation diagrams of switching modules of the AMTS-4 and UAK: a) module 400-400-400 (f = 1); b) module 200-200-200 (f = 2).

not connected to each other; only switchboards of different links are connected to each other.

The 400-400-400 module is singly connected, that is, there is only one intermediate line between the first-link switchboard and one switchboard of the second link. The 200-200-200 module is doubly connected, that is, one switchboard of the first link is connected to one switchboard of the second link by two intermediate lines.

The two-line module AB (CD) of the 400-400-400 type is arranged in eight frames (four frames of link A and four frames of link B); the two-link 200-200-200 module is placed in four frames (two frames of link A and two frames of link B).

Up to ten MKS forming five switchboards (two MKS each) are installed in each frame. Each switchboard has 20 verticals and 20 bank lines. Thus, 100 verticals and 100 bank lines are formed on one frame Beginning with this fact, the number of frames of the MKS is determined for each link of the module.

Figure 5.3 shows a structural diagram of the switching system. All of the calls are set up via four links. The following participate in a connection between the input and output: the intermediate line between links A and B, the intermodule line between modules AB and CD, the intermediate line C and D. The incoming lines and channels are connected fully accessibly to the switching modules AB; the incoming lines and long distance channels of direct and bypass routings are connected fully accessibly to the switching modules CD. The outgoing and incoming channels of one routing must be distributed uniformly over all the outgoing and incoming modules, respectively. The same thing pertains to the ZSL groups from each ATS and the SLM groups to the incoming message junctions of the GATS (UVSM) and the TsS of its zone and also to other lines connected to the switching bank.

During the process of servicing a call coming to the input of the switching system, the corresponding incoming and outgoing points of the bank are marked to which the the free lines or channels of the required routing are connected. Then an attempt

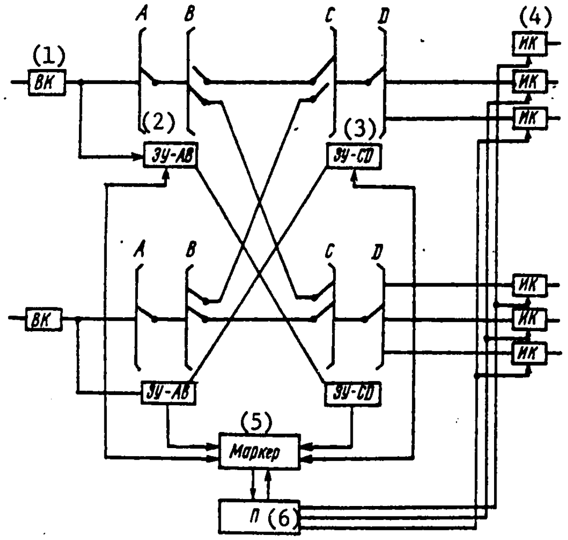

Figure 5.3. Structural diagram of the switching system of the AMTS-4 and UAK.

Key:
1. VK
2. ZU-AB
3. ZU-CD
4. IK
5. Marker
6. P

is made to set up the call via the free intermediate lines between links to all free lines of the required routing.

The selection of free intermediate lines between links is made by the marker. The losses occurring in cases where free incoming lines are theoretically available for the call coming into the input, but at the given time it is impossible to busy them inasmuch as there are no free intermediate paths to these lines or losses as a result of internal blockings. The probability of these losses depends on the average amount of traffic coming to the bank point and the size of the group of intermediate (intermodule) lines. The probability of losses to internal blocking increases with an increase in traffic to the bank point.

The load must be distributed uniformly between all the incoming modules AB, the modules CD and also between the switchboards of links A and D. In this case if the calculated value of the average load to one line turns out to be greater than 0.6 Erlang, not all points of the bank should be taken, which is achieved by increasing the number of modules. Here the untaken points of the bank are distributed uniformly among all modules.

Each module AB is connected to each module CD by intermediate (intermodule) lines. Independently of the number of modules and size of the load on the intermediate line all the lines in the intermodule group must be active. Here the intermodule lines must be distributed by modules in such a way that the number of lines will be a multiple of five in the group between each pair of modules.

Table 5.1.

Number of AB modules	Number of CD modules	Average No. of lines between each pair of AB and CD modules	Distribution of intermodule lines by groups of modules		Distribution of intermodule lines by groups of verticals	No. of individual groups with No. of lines in a module			No. of groups of verticals		
						20	10	5	Not separated	Separated by 10	Separated by 5
2	2	400/2=200	2	200	2(10×20)	20	—	—	20	—	—
3	3	400/3=133	2	130	2[(6×20)+10]	12	2	—	19	1	—
			1	140	1(7×20)	7	—	—			
4	4	400/4=100	4	100	4(5×20)	20	—	—	20	—	—
5	5	400/5=80	5	80	5(4×20)	20	—	—	20	—	—
6	6	400/6=66	4	65	4[(3×20)+5]	12	—	4	18	1	1
			2	70	2[(3×20)+10]	6	2	—			
7	7	400/7=57	4	55	4[(2×20)+10+5]	8	4	4	17	2	1
			3	60	3(3×20)	9	—	—			
8	8	400/8=50	8	50	8[(2×20)+10]	16	8	—	16	4	—
9	9	400/9=44	1	40	1(2×20)	2	—	—	18	—	2
			8	45	8[(2×20)+5]	16	—	8			
10	10	400/10=40	10	40	10(2×20)	20	—	—	20	—	—
11	11	400/11=36	8	35	8[20+10+5]	8	8	8	14	4	2
			3	40	3(2×20)	6	—	—			
12	12	400/12=33	6	30	6(20+10)	6	6	—			
			4	35	4(20+10+5)	4	4	4	14	5	1
			2	40	2(2×20)	4	—	—			
13	13	400/13=31	12	30	12(20+10)	12	12	—	14	6	—
			1	40	1(2×20)	2	—	—			
14	14	400/14=28	4	25	4(20+5)	4	—	4	14	5	1
			10	30	10(20+10)	10	10	—			
15	15	400/15=26	10	25	10(20+5)	10	—	10	15	2,5	2,5
			5	30	5(20+10)	5	5	—			

Table 5.2

<table>
<tr><th>Vertical No.</th><th colspan="4">1AB</th><th colspan="4">2AB</th><th colspan="4">3AB</th><th colspan="4">4AB</th><th colspan="4">5AB</th><th colspan="4">6AB</th><th colspan="4">7AB</th></tr>
<tr><td>1
2</td><td colspan="4">1—1</td><td colspan="4">2—2</td><td colspan="4">3—3</td><td colspan="4">4—4</td><td colspan="4">5—5</td><td colspan="4">6—6</td><td colspan="4">7—7</td></tr>
<tr><td>3
4</td><td colspan="4">1—2</td><td colspan="4">2—3</td><td colspan="4">3—4</td><td colspan="4">4—5</td><td colspan="4">5—6</td><td colspan="4">6—7</td><td colspan="4">7—1</td></tr>
<tr><td>5
6</td><td colspan="4">1—3</td><td colspan="4">2—4</td><td colspan="4">3—5</td><td colspan="4">4—6</td><td colspan="4">5—7</td><td colspan="4">6—1</td><td colspan="4">7—2</td></tr>
<tr><td>7</td><td colspan="4">1—4</td><td colspan="4">2—5</td><td colspan="4">3—6</td><td colspan="4">4—7</td><td colspan="4">5—1</td><td colspan="4">6—2</td><td colspan="4">7—3</td></tr>
<tr><td>8</td><td colspan="4">1—5</td><td colspan="4">2—6</td><td colspan="4">3—7</td><td colspan="4">4—1</td><td colspan="4">5—2</td><td colspan="4">6—3</td><td colspan="4">7—4</td></tr>
<tr><td>9</td><td colspan="4">1—6</td><td colspan="4">2—7</td><td colspan="4">3—1</td><td colspan="4">4—2</td><td colspan="4">5—3</td><td colspan="4">6—4</td><td colspan="4">7—5</td></tr>
<tr><td>10</td><td colspan="4">1—7</td><td colspan="4">2—1</td><td colspan="4">3—2</td><td colspan="4">4—3</td><td colspan="4">5—4</td><td colspan="4">6—5</td><td colspan="4">7—6</td></tr>
<tr><td>11</td><td colspan="4">1—1</td><td colspan="4">2—2</td><td colspan="4">3—3</td><td colspan="4">4—4</td><td colspan="4">5—5</td><td colspan="4">6—6</td><td colspan="4">7—7</td></tr>
<tr><td>12</td><td colspan="4">1—2</td><td colspan="4">2—3</td><td colspan="4">3—4</td><td colspan="4">4—5</td><td colspan="4">5—6</td><td colspan="4">6—7</td><td colspan="4">7—1</td></tr>
<tr><td>13</td><td colspan="4">1—3</td><td colspan="4">2—4</td><td colspan="4">3—5</td><td colspan="4">4—6</td><td colspan="4">5—7</td><td colspan="4">6—1</td><td colspan="4">7—2</td></tr>
<tr><td>14</td><td colspan="4">1—4</td><td colspan="4">2—5</td><td colspan="4">3—6</td><td colspan="4">4—7</td><td colspan="4">5—1</td><td colspan="4">6—2</td><td colspan="4">7—3</td></tr>
<tr><td>15</td><td colspan="4">1—5</td><td colspan="4">2—6</td><td colspan="4">3—7</td><td colspan="4">4—1</td><td colspan="4">5—2</td><td colspan="4">6—3</td><td colspan="4">7—4</td></tr>
<tr><td>16</td><td colspan="4">1—6</td><td colspan="4">2—7</td><td colspan="4">3—1</td><td colspan="4">4—2</td><td colspan="4">5—3</td><td colspan="4">6—4</td><td colspan="4">7—5</td></tr>
<tr><td>17</td><td colspan="4">1—7</td><td colspan="4">2—1</td><td colspan="4">3—2</td><td colspan="4">4—3</td><td colspan="4">5—4</td><td colspan="4">6—5</td><td colspan="4">7—6</td></tr>
<tr><td>18</td><td colspan="2">1—5</td><td colspan="2">1—4</td><td colspan="2">2—6</td><td colspan="2">2—5</td><td colspan="2">3—7</td><td colspan="2">3—6</td><td colspan="2">4—1</td><td colspan="2">4—7</td><td colspan="2">5—2</td><td colspan="2">5—1</td><td colspan="2">6—3</td><td colspan="2">6—2</td><td colspan="2">7—4</td><td colspan="2">7—3</td></tr>
<tr><td>19</td><td colspan="2">1—7</td><td colspan="2">1—6</td><td colspan="2">2—1</td><td colspan="2">2—7</td><td colspan="2">3—2</td><td colspan="2">3—1</td><td colspan="2">4—3</td><td colspan="2">4—2</td><td colspan="2">5—4</td><td colspan="2">5—3</td><td colspan="2">6—5</td><td colspan="2">6—4</td><td colspan="2">7—6</td><td colspan="2">7—5</td></tr>
<tr><td>20</td><td>1—7</td><td>1—6</td><td>1—5</td><td>1—4</td><td>2—1</td><td>2—7</td><td>2—6</td><td>2—5</td><td>3—2</td><td>3—1</td><td>3—4</td><td>3—6</td><td>4—3</td><td>4—2</td><td>4—1</td><td>4—7</td><td>5—4</td><td>5—3</td><td>5—2</td><td>5—1</td><td>6—5</td><td>6—4</td><td>6—3</td><td>6—2</td><td>7—6</td><td>7—5</td><td>7—4</td><td>7—3</td></tr>
<tr><td>Switchboard No.</td><td>1—5</td><td>6—10</td><td>11—15</td><td>16—20</td><td></td><td></td><td></td><td></td><td></td><td></td><td></td><td></td><td></td><td></td><td></td><td></td><td></td><td></td><td></td><td></td><td></td><td></td><td></td><td></td><td>1—5</td><td>6—10</td><td>11—15</td><td>16—20</td></tr>
</table>

Table 5.2 (continued)

<table>
<tr><th>Vertical No.</th><th colspan="4">1CD</th><th colspan="4">2CD</th><th colspan="4">3CD</th><th colspan="4">4CD</th><th colspan="4">5CD</th><th colspan="4">6CD</th><th colspan="4">7CD</th></tr>
<tr><td>1
2</td><td colspan="4">1—1</td><td colspan="4">2—2</td><td colspan="4">3—3</td><td colspan="4">4—4</td><td colspan="4">5—5</td><td colspan="4">6—6</td><td colspan="4">7—7</td></tr>
<tr><td>3
4</td><td colspan="4">7—1</td><td colspan="4">1—2</td><td colspan="4">2—3</td><td colspan="4">3—4</td><td colspan="4">4—5</td><td colspan="4">5—6</td><td colspan="4">6—7</td></tr>
<tr><td>5
6</td><td colspan="4">6—1</td><td colspan="4">7—2</td><td colspan="4">1—3</td><td colspan="4">2—4</td><td colspan="4">3—5</td><td colspan="4">4—6</td><td colspan="4">5—7</td></tr>
<tr><td>7</td><td colspan="4">5—1</td><td colspan="4">6—2</td><td colspan="4">7—3</td><td colspan="4">1—4</td><td colspan="4">2—5</td><td colspan="4">3—6</td><td colspan="4">4—7</td></tr>
<tr><td>8</td><td colspan="4">4—1</td><td colspan="4">5—2</td><td colspan="4">6—3</td><td colspan="4">7—4</td><td colspan="4">1—5</td><td colspan="4">2—6</td><td colspan="4">3—7</td></tr>
<tr><td>9</td><td colspan="4">3—1</td><td colspan="4">4—2</td><td colspan="4">5—3</td><td colspan="4">6—4</td><td colspan="4">7—5</td><td colspan="4">1—6</td><td colspan="4">2—7</td></tr>
<tr><td>10</td><td colspan="4">2—1</td><td colspan="4">3—2</td><td colspan="4">4—3</td><td colspan="4">5—4</td><td colspan="4">6—5</td><td colspan="4">7—6</td><td colspan="4">1—7</td></tr>
<tr><td>11</td><td colspan="4">1—1</td><td colspan="4">2—2</td><td colspan="4">3—3</td><td colspan="4">4—4</td><td colspan="4">5—5</td><td colspan="4">6—6</td><td colspan="4">7—7</td></tr>
<tr><td>12</td><td colspan="4">7—1</td><td colspan="4">1—2</td><td colspan="4">2—3</td><td colspan="4">3—4</td><td colspan="4">4—5</td><td colspan="4">5—6</td><td colspan="4">6—7</td></tr>
<tr><td>13</td><td colspan="4">6—1</td><td colspan="4">7—2</td><td colspan="4">1—3</td><td colspan="4">2—4</td><td colspan="4">3—5</td><td colspan="4">4—6</td><td colspan="4">5—7</td></tr>
<tr><td>14</td><td colspan="4">5—1</td><td colspan="4">6—2</td><td colspan="4">7—3</td><td colspan="4">1—4</td><td colspan="4">2—5</td><td colspan="4">3—6</td><td colspan="4">4—7</td></tr>
<tr><td>15</td><td colspan="4">4—1</td><td colspan="4">5—2</td><td colspan="4">6—3</td><td colspan="4">7—4</td><td colspan="4">1—5</td><td colspan="4">2—6</td><td colspan="4">3—7</td></tr>
<tr><td>16</td><td colspan="4">3—1</td><td colspan="4">4—2</td><td colspan="4">5—3</td><td colspan="4">6—4</td><td colspan="4">7—5</td><td colspan="4">1—6</td><td colspan="4">2—7</td></tr>
<tr><td>17</td><td colspan="4">2—1</td><td colspan="4">3—2</td><td colspan="4">4—3</td><td colspan="4">5—4</td><td colspan="4">6—5</td><td colspan="4">7—6</td><td colspan="4">1—7</td></tr>
<tr><td>18</td><td colspan="2">4—1</td><td colspan="2">5—1</td><td colspan="2">5—2</td><td colspan="2">6—2</td><td colspan="2">6—3</td><td colspan="2">7—3</td><td colspan="2">7—4</td><td colspan="2">1—4</td><td colspan="2">1—5</td><td colspan="2">2—5</td><td colspan="2">2—6</td><td colspan="2">3—6</td><td colspan="2">3—7</td><td colspan="2">4—7</td></tr>
<tr><td>19</td><td colspan="2">2—1</td><td colspan="2">3—1</td><td colspan="2">3—2</td><td colspan="2">4—2</td><td colspan="2">4—3</td><td colspan="2">5—3</td><td colspan="2">5—4</td><td colspan="2">6—4</td><td colspan="2">6—5</td><td colspan="2">7—5</td><td colspan="2">7—6</td><td colspan="2">1—6</td><td colspan="2">1—7</td><td colspan="2">2—7</td></tr>
<tr><td>20</td><td>2—1</td><td>3—1</td><td>4—1</td><td>5—1</td><td>3—2</td><td>4—2</td><td>5—2</td><td>6—2</td><td>4—3</td><td>5—3</td><td>6—3</td><td>7—3</td><td>5—4</td><td>6—4</td><td>7—4</td><td>1—4</td><td>6—5</td><td>7—5</td><td>1—5</td><td>2—5</td><td>7—6</td><td>1—6</td><td>2—6</td><td>3—6</td><td>1—7</td><td>2—7</td><td>3—7</td><td>4—7</td></tr>
</table>

The method of distributing the intermodule lines by groups of verticals of links B and C has a significant influence on the probability of losses as a result of internal blockings. The most expedient distribution of the intermodule lines for offices of different capacities is illustrated in Table 5.1. An example of the intermodular connections for an office containing seven AB modules and seven CD modules is illustrated in Table 5.2.

Module Memories

Each module has its own memory ZU-AB and ZU-CD corresponding to it.

The ZU-AB memory controls operation of the MKS of links A and B of the incoming module AB. From module AB information is transmitted to the marker about availability of intermediate lines which can be used at the given time to set up a call. The results of marker selection are entered in the ZU-AB. On obtaining information from the jointly operating ZU-CD that the call paths have been defined, the ZU-AB connects the MKS.

The ZU-CD memory controls connectors C and D of the outgoing module CD. Information is transmitted from the CD module to the marker about intermediate lines which can be used at the given time to set up a call. The result of marker selection is entered in the ZU-CD. After determining the paths of the call information is transmitted about this to the jointly operating ZU-AB and the MKS is connected.

After checking the connection of the channel the ZU-AB and ZU-CD are released. The busy time of the ZU setting up one call is 90-95 milliseconds; of this 30 milliseconds go for joint operation with the marker and decoder; 50 milliseconds go for connecting the switching channel; 10-15 milliseconds are the relief time and operation of the monitoring circuits.

The incoming module AB can be connected to the marker only if the ZU [memory] of this module is free, that is, the fact that the ZU-AB is busy can increase the marker call waiting time somewhat. As for the ZU of the outgoing modules, for the indicated relation of the busy times of the marker and the ZU, the incoming call can encounter one, two or three simultaneously busy ZU-CD, that is blocking of the switching modules CD by the memories is possible. If free channels are found only in the outgoing modules which are blocked by the ZU, the marker waits for release of one of these modules.

Two ZU-AB or two ZU-CD are placed in one frame.

Switching System Marker

The marker performs two functions: 1) selection and determination of the register which must be connected to the decoder; 2) selection of the connecting path between the incoming and one of the marked outgoing points of the bank.

The marker chooses the register and the connecting path in one busy (in 30 milliseconds). The busy time of the marker setting up the call to the AO is 60 milliseconds. The marker permits selection and determination of one of 900 registers which are separated into 30 groups of 30 registers each. According to the operation of the selection system the marker determines one of the intermediate lines in interaction with the module ZU.

In order to insure uninterrupted operation of the equipment at the office two markers are provided which operate alternately. Both markers are in the same frame.

The setting up of the call is controlled by the marker over a one-line circuit. The marker can be connected to any incoming or outgoing module of the switching system and it is possible to set up calls from any incoming system to any outgoing system. If the call comes at a time when the marker is busy, it waits for release of the marker. The register receiving a call when the marker is busy is put on hold. This form of waiting is external waiting for the marker.

In the next phase of setting up the call the marker is connected to the modules AB and CD, the memories of which must be free. If the free outgoing lines of the required routing are available only in the modules, the ZU of which are busy (that is, the modules are blocked by the ZU), the marker waits for release of one of these ZU-CD. This form of waiting is internal waiting for the marker.

According to the results of simulation and calculations performed by the TsNIIS, the probability of blocking of the CD modules by the ZU is about 4%. The waiting time by the marker for release of an outgoing module blocked by the ZU can assume discrete values: 5, 35, 65 milliseconds (95 milliseconds for the ZU).

The average busy time of the marker for servicing any call is made up of the operating time setting up connections in the switching system and the waiting time for servicing connections to the modules blocked by the ZU:

$$t_M = t'_M (1 - P_M) + t_0 P_M,$$

where P_m is the probability of waiting by the marker for release of a module blocked by a ZU; t'_M is the busy time of the marker for setting up the call when servicing calls to modules not blocked by ZU; t_0 is the busy time of the marker when servicing calls to modules blocked by ZU.

In order to determine the value of t'_M it is necessary to consider the service system adopted at the AMTS-4 with the possibility of limited waiting on channels. The average busy time of the marker for calls which are serviced without waiting on channels is equal to 30 milliseconds, and for calls which are serviced with waiting on channels (when setting up the call to the AO), about 60 milliseconds. With a probability of setting up a call for waiting P_B, the marker busy time for modules not blocked by ZU is

$$t'_M = 30(1 - P_B) + 60 P_B.$$

The average busy time of a marker for calls waiting for connection to modules blocked by ZU is

$$t_0 = t'_M + \gamma_0,$$

where γ_0 is the waiting time for a waiting call.

Substuting the values of $P_M = 0.04$, $P_B = 0.01$, $\gamma_0 = 5, 35, 65$ milliseconds in the above-indicated expressions, we obtain the average busy time of the marker equal to $t_M = 31.6$ milliseconds (for $\gamma_0 = 65$ milliseconds).

The calculation of the marker reduces to determining the maximum number of calls which the marker system can service with an admissible waiting time. Since at the AMTS-4 the marker system is one marker, the waiting time in it is determined just as in a system with waiting consisting of one instrument. The calls are selected from the queue for servicing in random order.

The average waiting time for connection of the marker for all calls depends on the load on the marker and can be defined by the formula for a single queue system with constant service time:

$$\bar{\gamma}_{\text{м}} = Y_{\text{м}} t_{\text{м}} / [2(1 - Y_{\text{м}})] .$$

The value of $\bar{\gamma}_M = 30$ milliseconds is taken as the norm for the admissible average marker waiting time. Beginning with this fact, with an average marker busy time for one call $t_M = 31.6$ milliseconds the load on the marker Y_M must be within the limits of 0.6 to 0.65 Erlang. Here the number of calls which the marker can service will be

$$B_{\text{м}} = 0{,}6 \cdot 3600 \cdot 1000 / 31{,}6 = 70\,000.$$

Decoder

The decoder is designed for selecting the routing and marking the line equipment of the selected routing on the basis of information received from the register in parallel code (for each digit there are six wires, the digit is transmitted in a "2 out 6" code by direct current). After analysis of the received information about the number of subscriber B or the service (to five digits) the decoder determines the group of routings, it selects the routing in the order of the established queue in which the free channel is available, and it marks the selected routing. After reception of the signal from the marker that the path has been selected, the decoder transmits the necessary information to the register and disconnects.

The decoder consists of a central part, the routing number modules and the outgoing routing modules. The central part is constructed from electronic circuits. The central parts of two decoders are placed on one frame. For the routing number modules and the outgoing routing modules, composite frames are used. On each composite frame there are 120 routing number modules and 80 outgoing routing modules or 240 routing number modules. A maximum of 840 routing numbers and 240 outgoing routings can be connected to an office.

A routing number is the number by which the routing to the UAK, AMTS or the network of its zone is defined — AB, ABC, ABCab and 2ab. The number of routing numbers at the AMTS is determined by the sum of the following: the number of long-distance service routings (to the UAK) determined by the decoder by analyzing two digits of the long-distance code AB which can reach 15;

the number of three-digit ABC codes (to the AMTS) dialed by the subscriber or telephone operator which can reach 300;

the number of routings to zones in which several AMTS are installed determined by the decoder by analyzing five digits -- ABCab;

the number of routings of the zone telephone network including the routings to the UVSM GATS, within the territory of which the designed AMTS is located.

Each routing number corresponds to a block of routing numbers 3R. Each outgoing routing corresponds to a block of outgoing routings 4R. Each 3R block can be connected to five 4R blocks, that is, to five different routings (one direct and four bypass).

For connection of the maximum number of blocks, that is, 840 3R and 240 4R blocks, five composite frames are required. The makeup of the decoder frames is illustrated in Figure 5.4. The composite decoder frames are redundant.

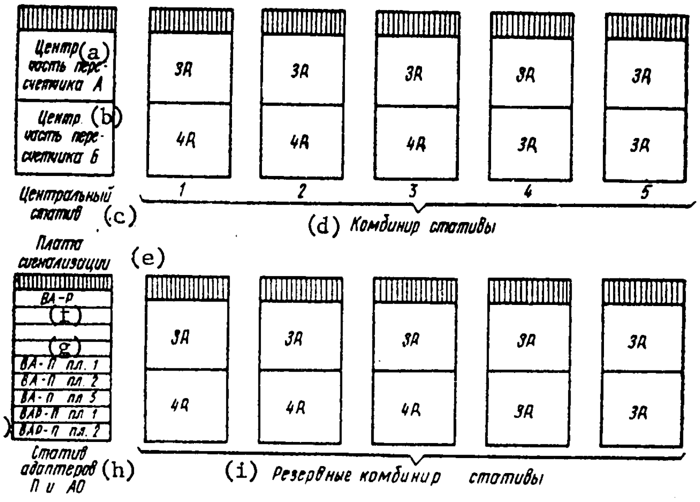

Figure 5.4. Makeup of decoder frames.

Key:
- a. central part of the decoder A
- b. central part of the decoder B
- c. central frame
- d. composite frames
- e. specialization board
- f. VA-R
- g. VA-P board ...
- h. adaptor frame P and AO
- i. redundant composite frames
- j. VAR-P board ...

Waiting Equipment AO

The waiting equipment is designed to insure the possibility of servicing calls with limited waiting for the release of channels, trunks and switchboard positions.

Only priority subscriber calls are set up for waiting at the AMTS with outgoing terminal connections if all channels and trunks are busy. Subscribers of other categories, having no priority, are rejected if all the channels and lines of the routing are busy. Tandem calls are serviced with limiting waiting for subscribers of all categories -- priority and nonpriority. However, for calls from priority subscribers privileges have been been provided for in the AO equipment -- reserving of a waiting place and priority servicing of waiting calls from priority subscribers.

The maximum number of waiting lines is 40. These lines are connected fully accessibly to the outgoing modules of the switching system. The ratio of the number of waiting lines for calls can be as follows: for channels and SLM 20, 30, 40; for switchboards 20, 10, 0.

The waiting equipment makes it possible to limit the number of nonpriority calls waiting for the release of channels. Restricting the waiting with respect to time is divided in three gradations: 15-30, 30-60, 45-90 milliseconds. On expiration of the control waiting time the call is taken off hold.

On connecting the waiting equipment, information about the routing number (two, three or five digits of the long-distance number: AB, ABC, ABCab and 2AB) and category of the waiting call is transmitted to it from the decoder. Each routing number corresponds to a block of routing numbers 3C. Each outgoing routing corresponds to a block of outgoing routings 4C. It is possible to connect to two 4C blocks to each 3C block for the call can be set up for waiting on two routings.

Constant monitoring of the business of the channels on the routings connected to the AO and blocking of released channels for waiting calls are provided by connecting the outgoing routing blocks 4C in the AO to the corresponding blocks 4R in the decoder.

The AO equipment is placed in central and composite frames. The following are installed in the central frame: the waiting line systems, memory of the AO and the routing number analysis circuit. This frame is connected to the switching modules and the register distributor. The composite frames contain the routing number blocks 3C and outgoing routing blocks 4C. One composite frame has 90 4C blocks and 125 3C blocks or 250 3C blocks. The central frame and composite frames are redundant. The makeup of the AO equipment is shown in Figure 5.5.

Register, Decoder and Waiting Equipment Adaptors

The adapters VA-R, VA-P and VAR-P are located on a separate frame.

The segregated adapter of the VA-R registers operates jointly with the test adapter of the registers on the monitoring and testing equipment KIA frame and is connected at the time of testing to wires between the tested register and the decoder.

The isolated adapter of the decoder VA-P is designed to test the decoder and waiting equipment automatically (using the KIA) and manually.

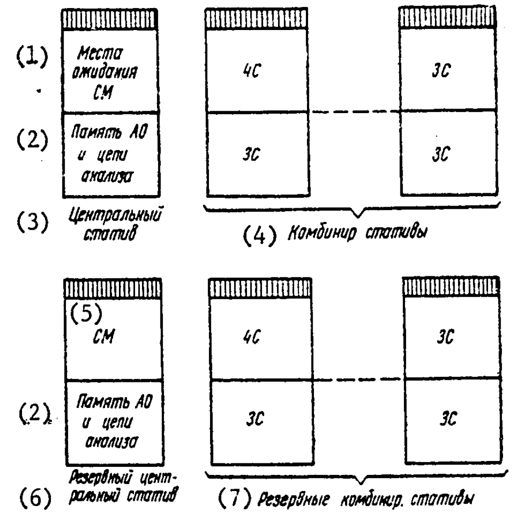

Figure 5.5. Makeup of the waiting equipment frames.

Key:
1. waiting place of the SM
2. memory of the AO and analysis circuit
3. central frame
4. composite frames
5. SM
6. redundant central frame
7. redundant composite frames

The isolated recording adapter of the VAR-P decoder is designed to record errors which occur during operation of the decoder or waiting equipment or during joint operation of this equipment with other equipment.

Register Equipment

Different types of registers are used correspondingly to service different types of calls.

The outgoing register IR is connected to the VKZSL equipment of all varieties and services the outgoing automatic calls over the channels of the long distance and intrazonal networks, the outgoing automatic and semiautomatic calls for international service and also calls for the services of the switchboard shop of the AMTS. It receives information about the number of subscriber B, about the category and number of subscriber A and dispatches this information by the corresponding means to the instruments of its AMTS, to the long-distance channels, over the trunks to the ATS instruments of its zone and to the charge computing equipment AUS.

In order to receive information about the category and number of subscriber A connected to the ATS with the AON equipment, the receiving part of the AON -- information request and reception unit UZPI which is connected to the R through the connector S -- is installed at the AMTS. In the UZPI information about the category and number of the subscriber A comes from the transmitting part of the AON installed at the ATS.

International calls are set up by using a special international service attachment PMS which is connected through the connector S to the IR when the subscriber dials "10" -- the code for access to the international network. The connector S has 30 inputs and 4 outputs. The IR are connected to the inputs, and four UZPI or four PMS are connected to the outputs. The PMS attachment receives and records the last four digits of the international number, determines the end of dialing of the international number and is essentially an auxiliary memory of the outgoing register.

The connector and the attachment are arranged on the S-PMS frame which is installed jointly with the IR and the IR/K frames.

The tandem register TR is connected to the VKTS Systems and services the incoming terminal and tandem calls over the single-frequency signal system channels. The register receives and records information about the category of the call and the long-distance number of the subscriber B and outputs information to the control units on the category of the call and the first five digits of the long-distance number of subscriber B. Output of information to the control units begins after the register receives five digits of the long-distance number. The remaining five digits are received simultaneously with information output. The information output procedure is determined by a signal from the decoder depending on the routing of the call.

The incoming matching register VSR is connected to the VKTNS systems and services incoming and tandem calls arriving over the long-distance channels of the two-frequency signal system. Tandem connections of these channels (when necessary) can be made with the channels of both the two-frequency and the single-frequency signal system.

The register VSR receives and records the long-distance number of subscriber A from the register of the preceding office during automatic service or from the number dialer of the telephone operator in the case of semiautomatic service, it transmits information on the category of call and the first five digits of the long-distance number to the decoder and outputs the complete long-distance number (or part of it) to the next register. The information output procedure is determined by a signal from the decoder.

The outgoing matching register ISR is connected to the IKTNS systems and services the outgoing long-distance automatic and semiautomatic calls over the two-frequency signal system channels. It receives the long-distance number of subscriber B from the registers connected to the incoming line equipment and records it. The information output to the channel begins on completion of reception of all digits of the number by the decade method in two steps (code and number).

The ISR register operates without a decoder. The channel busy signal is transmitted by the line equipment after connection of the register to it.

The semiautomatic service register PSR is connected to the RUSK, VKMS equipment and to the switchboard positions of the long-distance switchboards, it services semiautomatic calls over the long-distance channels, over the intrazonal network lines and communications with the services of the AMTS.

The PSR register receives the long-distance or intrazonal number of subscriber B, the long-distance or local number of the order-circuit ATS subscriber and also the international service number or long-distance code of the base international office from the key pulser of the switchboard position or from the terminal line equipment. After receiving and recording all of the information the PSR is connected to the decoder and transmits the information needed to set up the call to the decoder. By the signals from the decoder, the recorded information is output in the corresponding way to the registers of its or another AMTS or the local network.

The PSR register can make a repeated attempt to set up the call if the first attempt is unsuccessful in the case of busy intermediate paths in the switching system or reception of the "information received incorrectly" signal from the register of the opposing office. The PRS register provides for transmission and reception of the required signals for setting up the call for waiting and also for taking it off hold if the control time expires or a free channel appears on the required routing.

The order circuit register SR is connected to the VKS equipment and services the calls between subscribers of different order-circuit ATS within the limits of one zone and different zones. It receives the long-distance order-circuit number from the order-circuit ATS, records it, transmits information to the decoder consisting of the first five digits of the full long distance number of the order-circuit ATS subscriber and the category of the call "automatic nonpriority" (the register creates the call category itself), and it outputs the long-distance order-circuit number to the control units of the office.

Information comes to the AMTS registers by the following methods: the long-distance number of the subscriber B by the decade method (IR, VSR, SR) or multifrequency (TR, ISR, PSR); the call category, multifrequency (TR, SR), by the resistance method from the decoder (IR, PSR), or it is formed in the register itself (VSR, SR);

the category and number of subscriber A by the resistance method ("2 out of 5" code) from the UZPI when working with the ATS containing AON equipment or by the decade method from the number dialer of the subscriber when working with the ATS without AON (in this case the IR itself creates the provisional category of the subscriber).

A multifrequency receiver is provided as part of the registers for receiving information by multifrequency code. The recorder of the received information is constructed on the basis of a hercon relay.

Information is fed to the decoder by means of the electronic circuit by parallel code. The information from the decoder required for further operation of the register (for example, the subscriber number output method from which the digits begin to be output, and so on) is received by the register also in parallel code. The information can be output from the registers as follows:

by multifrequency "2 out of 6" code by the "pulse packet" method (VSR, TR, SR, IR, PSR);

by the decade method (VSR, ISR, TR, SR, IR, PSR);

by multifrequency "2 out of 6" code by the "pulse shuttle" method (VSR, TR, SR, IR, PSR).

The RI stage serves to connect the terminal line equipment to the registers. In this stage two-link modules with concentration are used. Internal blockings are possible in the modules. With respect to capacity, RI modules of three types can be used: 120-100-30; 160-100-20; 200-100-10. Group formation circuits of the RI modules are shown in Figure 5.6.

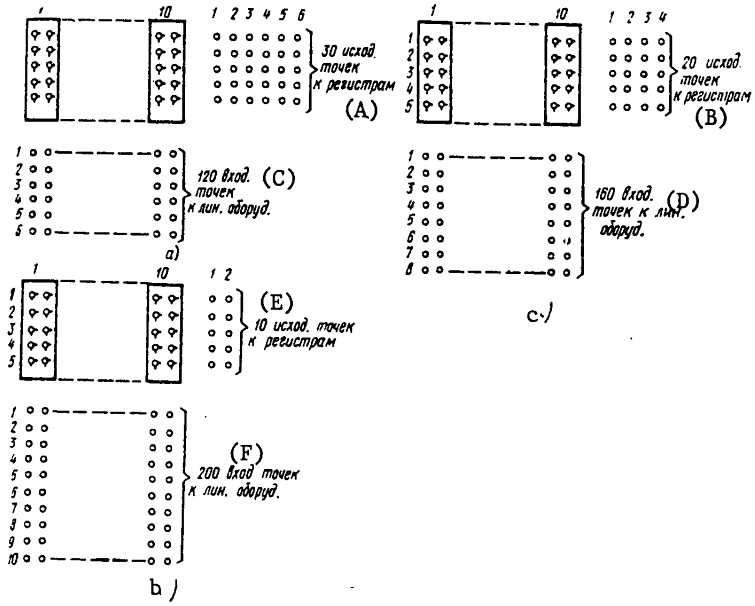

Figure 5.6. Group formation circuits of the RI stage modules: a) RI 120/20; b) RI 200/10; c) RI 160/20.

Key: A. 30 outgoing points to the registers
B. 20 outgoing points to the registers
C. 120 incoming points to the line equipment
D. 160 incoming points to the line equipment
E. 10 outgoing points to the registers
F. 200 incoming points to the line equipment

The RI stage module contains 10 MKS (10-12-12), to the verticals of which terminal line equipment is connected, and to the outputs of the switching bank, registers. The registers TR, VSR, ISR, PSR and TR can be connected to the outputs of the group of RI modules both by a fully accessible group and incompletely accessible group. The number of RI modules entering into a group is selected as a function of the magnitude of the incoming traffic, but must be no more than two. The number of registers in the group must not exceed the number of lines at the output of the used type of RI module. The IR registers considering the requirements of the AUS equipment can be included at the outputs of only one RI module.

Each RI module is serviced by two markers operating alternately. The marker of the RI stage is universal for all versions of modules.

The line equipment connected to one RI module is divided into 20 groups of six, eight or ten lines in a group. When the input is busy, the request to connect the

RI marker arises. The marker selects the group, then the set in the group, from which the call has come. On the basis of information about free registers and free intermediate lines in the module the marker selects one register, controls the connection of the MKS RI, monitors connection of the bank and disconnects. The operating time of the marker and the connection time of the RI module is approximately 130 milliseconds.

The marker is connected only if there is an available free register. If all the registers are busy or there are free registers but they are inaccessible as a result of blockings in the two-link system, the incoming call is placed on hold. A service system with limited waiting is used in the RI stage.

The choice of the type of module in the RI stage is made on the basis of a comparison with respect to number of registers required to service the corresponding traffic from the group of RI modules. The calculations demonstrated that IR, VSR, ISR and SR are most economically connected to the outputs of the 120-100-30 modules; TR and PSR are most economically connected to the 160-100-20 modules. The 200-100-10 modules are used primarily for connecting the TR to the UAK.

The register equipment is located in frames of two types: "normal" and composite. Only registers are installed on the "normal" frames, and in addition to the registers, the connecting systems of the RSP registers or multifrequency oscillators MG are located in the composite frames. By using one RSP system it is possible to connect up to 10 registers to the marker and the decoder.

The makeup of the frames with the registers is presented in Table 5.3.

Table 5.3.

Type of register	No. of registers on a frame		No. of frames for a group of 20 registers			Additional equipment of the composite frame
	normal	composite	normal	composite	total	
TR	3	2	6	1	7	Two RSP systems
VSR	3	2	6	1	7	The same
ISR	4	4	3	2	5	One MG
SR	4	3	4	1	5	Two RSP systems
IR	2	1	9	2	11	The same
PSR	4	3	4	1	5	The same

As is obvious from the table, for all types of registers except the ISR, two RSP systems are placed on one composite frame which can service a group of up to 20 registers. One multifrequency oscillation which can service up to 30-35 circuits is installed on the composite frame of the ISR. However, for uninterrupted operation of the equipment the ISR registers must be serviced by a group of two oscillators which requires installation of two composite frames.

Oscillators

The ringer oscillator GTN is designed to obtain audiofrequency currents required to transmit line and control signals over the long-distance telephone channels for automatic and semiautomatic service. The two-frequency oscillator is tuned to frequencies of 1200 and 1600 hertz; the single-frequency oscillator, to a frequency of 2600 hertz.

A group of two oscillators operates in the hot reserve mode. Under normal conditions the oscillators operate each on its own group of channels and provide simultaneous sending of a signal frequency over 20 channels. Under emergency conditions, one oscillator can provide for the possibility of simultaneous sending of a signal frequency over 40 telephone channels.

The multifrequency oscillator MChG is designed to obtain signals of six frequencies (700, 900, 1100, 1300, 1500, 1700 hertz) required to transmit control signals in "2 out of 6" code. The group of two oscillators operates in the hot reserve mode. Under normal conditions oscillators operate each on its own group of registers and must provide simultaneous sending of signals to ten registers. Under emergency conditions an oscillator can provide the possibility of similtaneous sending of signals to 20 registers.

The multifrequency oscillators are placed in combined register frames on RSP plates. Two multifrequency oscillators are installed on one RSP plate.

Automatic Charge Computing Equipment AUS

The AUS equipment is installed in the AMTS to record outgoing data required to compute the charge for calls and other types of information transmission for long-distance and intrazonal automatic service. Further processing of these data for reckoning payments and settlements with subscribers is done by computers which can service one or several AMTS.

The AUS equipment is constructed by the group principle using ferrite, semiconductor elements and RES-14 type relays; one AUS module services 120 VKZSL. The module includes the following basic modules:

the ferrite memory FZU for recording information from 120 VKZSL (a maximum of 150 bits per one VKZSL);

the register for recording numbers RZN which records information about the subscriber numbers, the category and numer of the IR for subsequent recording in the FZU;

the register for recording the time RZV to record information about the time the subscriber B answers and subsequently enter it in the FZU;

the register for reading numbers RSN to record the number information read from the FZU and subsequently transmit it to the buffer memory BP via the connector RS-BP;

The register for reading the time RSV to record the time the subscriber B answers read from the FZU and also information about the VKZSL number received from the UU/FZU-FZU connector. All of the information recorded in the RSV must be transmitted further through the RS-BP connector to the BP;

the control unit UU of the FZU for controlling the operations of erasing an entry and reading in the FZU;

the recognition unit OP-VK for selecting one of several VKZSL calling the AUS in a group of 120 systems;

the UU-FZU connector for connecting the corresponding verticals of the FZU to the erasure, recording or read circuits in the US/FZU and also for transmitting the VKZSL number to the RSV;

the automatic clock ACh for receiving one-second pulses from the primary clock to accumulate information about the time of day in the VU or the RZV and also transmission of the day pulse to the automatic calendar;

the subtraction circuit VU for determining the length of the call;

the blocking relay BR for blocking a group of 120 VKZSL in case of failure of the AUS module or transmission of a signal to the IR on operation without the AUS;

the through connecting circuit PU for connecting the lines marking a completed or incompleted call from the VKZSL to the RSV.

Every two AUS modules contain the following common modules:

the buffer memory BM for storing all of the information reflected on the punch card and subsequent transmission of information to the punch;

the connector between the read register and the buffer memory RS-BP for connecting lines from the RSN, RSV and VU to the BP;

the recognition unit OP-RS for controlling the operation of the connector RS-BP;

the recognition unit of the buffered memory OP-BP for connecting the BP to ordinary or hospital output units;

the automatic calendar AK for storing information about the day and month and subsequent transmission of this information to the BP.

Recorded Voice Connection Systems KPMG

The "recorded voice" machine is designed to output the messages "incorrectly dialed number," "call the operator," "wait" and so on. This machine is connected through the KPMG equipment to the outgoing switching modules of the office.

Switching Equipment

Switching equipment of the following types is provided in the AMTS to set up calls by the semiautomatic method and give out information:

MKNS -- long-distance switchboard of the no-delay service system;

MKIZS -- long-distance switchboard for the outgoing delay-basis calls;

TsSK -- central information switchboard;

RSK -- rayon information switchboard;

KNS -- shift chief switchboard.

For operating convenience the cordless type switchboards with remote relay section are used. The switchboards only have switches, buttons and lights necessary to control the setting up of a call.

The recorder and display for recording the category and number of subscriber A consisting of eight digital lights are installed in the MKNS. A multifrequency receiver is available at the switchboard position to receive the digits of the number and the category transmitted by the multifrequency method.

The MKNS switchboards are divided into two groups: the priority and nonpriority switchboard positions. The arrival of a call at one group or another is determined by the category of the subscriber. On connection of a register from the switchboard positions of each group, the corresponding priority mark is transmitted to the register. The number is dialed on the MK by the key pulser.

The MKIZS switchboard can transmit a mark to the register both for priority and nonpriority calls by examining the operation or according to design. The transmission of the priority mark to the register is provided by installing the corresponding jumper on the circuit board of the universal switchboard position URM.

The switchboard MK is made up of two switchboard positions. Each position has one URM system and six universal connection systems USK. The connection systems have answering and calling sides. The answering side of the MKNS switchboard is connected to the incoming and outgoing line banks of the switching stage, and the calling side, only to the incoming line bank.

There is a possibility of installing a special brigade leader's system in any MK to organize a brigade leader's switchboard position.

The TsSK switchboard is designed to give out simple items of information and transfer the call to obtain complex information to the RSK. The RSK number is dialed via the order-circuit ATS. The TsSK switchboard is built as a cordless type switchboard with remote relay section, and it has 15 connecting systems.

THe RSK switchboard is designed to give out complex information. It is made as a cordless switchboard and has 12 connecting systems.

The KNS switchboard is cordless with two switchboard positions. The switchboard has individual indicators to indicate the presence of an operator at the position, lights showing readiness to receive calls, buttons for connecting the monitored position to the operator's headset. The MK, TsSK and RSK switchboard positions are divided into four groups for monitoring. The KNS can monitor one position in each group simultaneously.

The switchboard equipment has no special production monitoring switchboard KPK. The KNS can be used for this purpose. For recording the operation of the monitored workplace it is proposed that tape recorders be used which can be located in the switchboard drawers. Each switchboard position of the KNS has a set of equipment connected to the line bank of the AMTS for connection to long-distance channels.

For order-circuit calls the MK, RSK and KNS switchboard positions are equipped with a two-way communication line with the order-circuit ATS. The TsSK switchboard positions are equipped with an incoming line from the order-circuit ATS. The switchboard positions of the brigade leaders, KNS and RSK are equipped with a two-way line with the GATS. The KNS switchboard position is equipped with direct communication lines with the brigade leaders' switchboard positions and the operative services of the office. The order-circuit lines are equipped with the universal connecting line USL systems located in a separate frame.

For organizing order,circuits between operative services the desk type order, circuit service switchboards used in the AMTS-2 can be used. The switchboards, in contrast to the AMTS-2, are fed from the frame corresponding to each switchboard position. This version excludes the necessity for a special power distribution frame with respect to the RPK switchboards.

For servicing direct subscribers it is proposed that the MRU type switchboards with direct subscriber PA line systems connected to the order-circuit AT be used. In this case the corresponding corrections must be made in the PA equipment.

Automatic Traffic Calculating Equipment AUN and Quality Control Equipment AKK

The AUN equipment provides for accounting for the number of busies and the load of individual types of office devices and consideration of the load distribution with respect to routings. The equipment contains devices for calculating the number of busies and the traffic of the UZN and devices for calculating the call distribution by the ABCab codes of the URV. The number of calls with respect to each ABCab code is recorded in the corresponding electronic counters of the URV, from which after defined time intervals it is output on the PL-80 tape punch. The call distribution can be calculated simultaneously with respect to no more than 40 previously given codes. The information about the number of busies and the load is also recorded on the electronic counters and the electronic erlang meter and after defined time intervals it is output on the PL-80 tape punch.

The AKK equipment provides for accumulation of statistical data on the operating quality of individual types of equipment and the number of calls and rejects in defined time intervals. The equipment contains the following: the VU input device and four electronic quality recorders. Every electronic quality recorder has an electronic counter with counting capacity to 100, an electronic counter with counting capacity to 30 and a decoder. The information is recorded in the electronic counters and is picked up on the punch tape after defined time intervals.

The input unit VU is used to match the AKK equipment to the office instruments: the decoder, waiting equipment, and relay systems for different purposes.

The AUN and AKK equipment is placed in universal frames on which the following are installed: four quality meters, two erlang meters, 40 URV counters and ten UZN counters.

Monitoring and Testing Equipment KIA

The automatic monitoring and testing equipment of AMTS-4 is a set of equipment which includes three basic assemblies: KIA-1, KIA-2, KIA-3. The switching, control and line equipment of the offices are tested using the KIA-1. For control of the tests and measurements programs written on punchtape are used which are input to the central part of the KIA. The tested equipment is connected to the central part of the KIA via the first and second type connecting units (PU-1 and PU-2).

The test results are recorded by the recording module operating by its own program transmitted by command from the central part of the KIA.

The KIA-2 assembly is used for testing and measurements of the long-distance channels jointly with the KIA-1. The operation of the KIA-2 located at the incoming end of the channel is controlled by a program recorded in the KIA-1 at the outgoing end. The control instructions for the KIA-2 are transmitted from the KIA-1 over the measured channel or any other channel. Connection to the switched channel (together with the terminal line equipment) is realized on the outgoing end via the PU-1 which is connected directly to the outgoing system. Connection to a channel without line equipment is realized using the PU-2.

The KIA-3 equipment is installed at the ATS and designed for testing and measuring the ZSL and SLM. The operation of the KIA-3 is controlled by the program written in the KIA-1.

The number of KIA-1 and KIA-2 sets at the AMTS-4 is determined by calculation and can reach a total of ten.

The KIA includes the following: sets of measuring devices, test units (adapters), automatic isolated adapters VA and also the workplaces of the channel equipment bench STK and the duty engineer's bench SDI.

The structural diagram of the KIA interconnected with the AMTS-4 and ATS equipment is shown in Figure 5.7. The incoming and outgoing systems of long-distance channels are provisionally designated as VK and IK, respectively, and the registers of all varieties (except IR), by R.

The first type connecting units PU-1 are designed to couple the ingoing and outgoing line equipment also registers and adapters with test equipment. The connection is provided over two paths:

the first path for connecting the incoming line equipment, registers and test and recording adapters to the test equipment;

the second path for connecting the outgoing line equipment to the test equipment.

Figure 5.8 shows a structural diagram of the first type connecting unit. As is obvious from the diagram, each connecting path consists of several stages of switches. The number of stages depends on the total number of tested systems and devices and also the accessibility of each stage.

The first stage switch 1P is part of the switch control unit KUP. The switches of the last stage SP are placed in the same frames as the connected devices. The 2P, 3P and so on switch stages are connected between the 1P and SP. These switch stages are placed in the sidewalls of the frame rows. If it is necessary to install several KIA systems (a maximum of up to ten), the combining switch SDP is used which is placed on a separate SP frame.

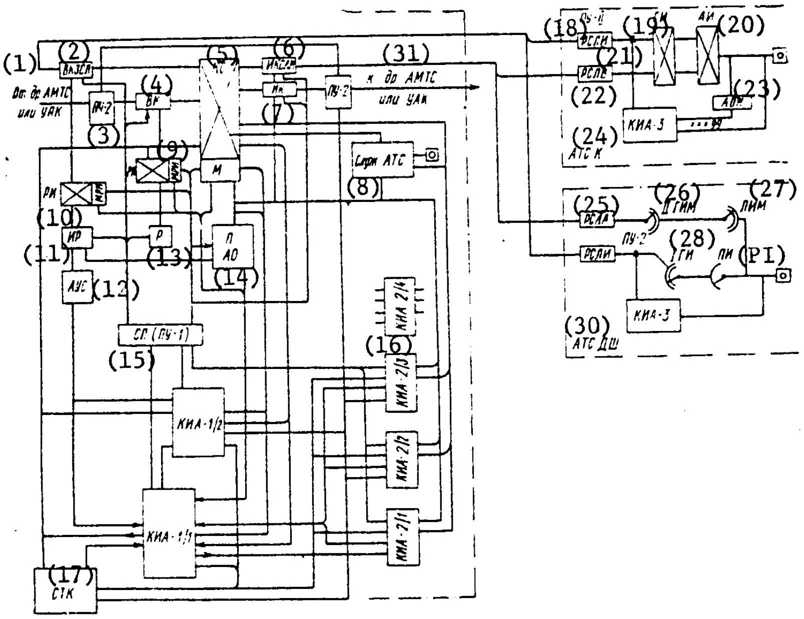

Figure 5.7. Structural diagram of the KIA of the AMTS-4.

Key:
1. from the other AMTS or UAK
2. VKZSL
3. PU-2
4. VK
5. KS
6. IKSLM
7. IK
8. order-circuit ATS
9. MRI
10. RI
11. IR
12. AUS
13. R
14. P AO
15. SP (PU-1)
16. KIA-...
17. STK
18. PU-III
19. GI
20. AI
21. RSLI
22. RSLV
23. AON
24. ATS K
25. RSLA
26. II GIM
27. LIM
28. IGI
29. PI
30. ATS DSh
31. to the other AMTS or UAK

The number of frame switches SP for the VK, IK and registers is determined by the number of the corresponding frames (one SP per frame). The number of group switches S3P is determined beginning with the fact that it is possible to connect ten SP to the outputs of one such switch. The number of S2P is determined analogously beginning with the fact that it is possible to connect S3P to the outputs of one S2P.

The segregated test and recording adapters (VA and RA) are connected to the outputs of the S3P. The AMTS-4 equipment includes the following types of adapters:

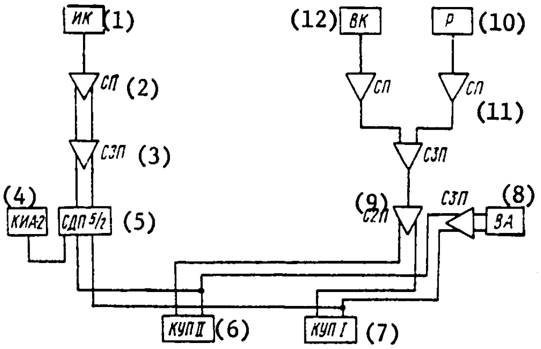

Figure 5.8. Structural diagram of connecting units.

Key:
1. IK
2. SP
3. S3P
4. KIZ-2
5. SDP 5/2
6. KUP II
7. KUP I
8. VA
9. S2P
10. R
11. SP
12. VK

recording for the marker M (VAR-M) placed on a separate VAR-M frame;

test for the marker M (VA-M) placed on the marker M frame;

segregated for the registers (VA-R) placed on a separate adapter frame which is part of the decoder P equipment and the waiting equipment AO;

segregated for testing the decoder (VA-P) placed on the frame of the adapters P and AO;

recording for the decoder (VAR-P) placed on the frame of the adapters P and AO;

segregated for the RI stage (VAR-RI) plaed on the RI-1 frame.

The adapters of all types (except the VAR-RI) are designed the same for the office. The number of adapters VAR-RI is determined calculating one adapter for the RI module, that is, the number of VAR-RI adapters is equal to the total number of RI modules. It is possible to connect 20 adapters to the outputs of S3P.

For the second connecting path the number of group switches S3P is determined calculating the possibility of connecting five SP to one S3P. The number of combining switches of the SDP is determined beginning with the possibility of connecting ten S3P to the outputs of one SDP.

Order-Circuit ATS

As the order-circuit ATS for an AMTS-4 and UAK, the crossbar equipment of the ATS K-100/2000 type is used. The maximum capacity of the order-circuit ATS is 900 numbers. When designing the order-circuit ATS, the office capacity must be taken as a multiple of 100 numbers.

The structural diagram of the order-circuit ATS is shown in Figure 5.9. The ATS K-100/2000 office contains the following stages: subscriber finding AI, group finding GI and register finding RI. The processes of setting up the calls are controlled using the registers and markers. The markers are attached to the switching modules of the finding stages. Each module of the AI, GI, RI stage has an individual marker setting up the connection only within the limits of the given module.

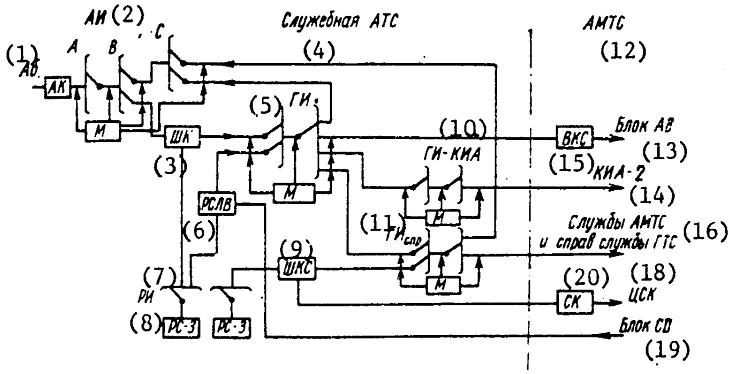

Figure 5.9. Structural diagram of an order-circuit ATS for AMTS-4.

Key:
1. subscriber
2. AI
3. Shk
4. order-circuit ATS
5. GI
6. RSLV
7. RI
8. RS-3
9. ShKS
10. GI-KIA
11. GI_{inf}
12. AMTS
13. AB module
14. KIA-2
15. VKS
16. AMTS services and information service of the GTS
17. TSK
18. CD module
19. SK

The order-circuit ATS is designed to organize order-circuit service both inside the given office and with other AMTS and UAK over the long-distance channels. Accordingly, the order-circuit ATS includes special RSLV equipment for coupling to the switching system of the AMTS (UAK).

The inputs of the AI stage include the operative subscriber lines (supervisory and duty technical personnel), the one-way lines from the direct subscribers of the AMTS, the one-way lines from different services of the switching shop and from the MK, two-way lines from different AMTS services.

The RSLV systems designed for incoming long-distance order-circuit service are connected to the inputs of the GI and RI stages. The outputs of the VI stage are connected to the intraoffice groups of lines forming routings to the hundreds modules of the AI stage, the outgoing lines to the AMTS for the long-distance order-circuit service, lines to the KIA-2 test units of the AMTS via the special GI-KIA module connected in place of the hundreds module of the AI and also lines to the switchboard shop services, other services of the AMTS and to the GTS information service via the special module GI_{inf} connected to the GI bank instead of the hundreds module of the AI.

Lines from the information service of the AMTS are connected via the ShKS systems to the inputs of the GI_{inf} module. The ShKS systems are connected in turn to the inputs of the RI stage. The three-digit registers RS-3 are connected to the outputs of the RI stage.

5.6. Calculating the Volume of AMTS-4 Equipment

Initial Data

The following materials are used as the initial data for calculating the office equipment:

the data on the number and mode of the channels and lines corresponding to the installed capacity of the office;

data on the flow distribution of the incoming traffic with respect to the outgoing routings;

the percentage ratio of the crossbar and ten-step ATS;

design solutions regarding the interaction of the AMTS-4 with other long-distance communication facilities in the same city;

quality index norms of the operation of the AMTS-4 instruments and lines;

the operating indices of the office;

data on the average busy time of the AMTS-4 instruments for setting up calls.

The outgoing materials with respect to number of channels, lines and their load are compiled on the basis of the given master plans for development of the long-distance, intrazonal and city networks for the city in which the construction of the AMTS-4 is planned. These data reduce to the table compiled like Table 5.4 which is presented as an example for designing the office. The number of channels N and the load Y for each group (version) of incoming and outgoing long-distance channels, ZSL and SLM and also for communications lines with the long-distance switchboards, with the order-circuit ATS, to the recorded voice unit and waiting lines are indicated in the table.

The lines from the long-distance switchboards connected to the bank of incoming modules of the KS service two traffic flows:

to the outgoing long distance channels with the semiautomatic method of setting up calls;

to the SLM for connecting to ATS subscribers of its city and zone with long-distance semiautomatic calling available to them.

The lines to the long-distance switchboards connected to the switching bank of the outgoing modules service the load sent to the long-distance switchboards MTS of the cord type located in the building with the AMTS-4 (basically for tandem connections with the manual service channels connected to the cord-type MK).

Table 5.4.

Types of channels and lines	Line equipment identification code	No of channels N	Load Y, erlangs
Incoming channels and lines			
Long-distance channels with signal system:			
single-frequency	VKTS	500	400
two-frequency	VKTNS	500	400
ZSL from the GATS:			
physical three-wire	VKZSL-2	400	200
physical four-wire	VKZSL-4	200	100
for a transmission system with segregated signal channel	VKZSLU	400	200
ZSL from the zone TsS for a transmission system without segregated signal channel	VKZSLU	650	325
Lines from the long-distance switchboard	RUSK	406	334
Lines from the order-circuit ATS	VKS	49	34
Total		3105	1993
Outgoing channels and lines			
Long-distance channels:			
single-frequency signal system	IKTS	500	400
two-frequency signal system	IKTNS	500	400
SLM to the UVSM:			
physical three-wire	IKSLM-2	250	200
physical four-wire	IKSLM-4	125	100
with a transmission system with segregated signal channel	IKSLM-T	375	300
SLM to the zone TsS for a transmission system without segregated signal channel	IKSLM-T	676	512
Lines:			
to the cord type MK	IKZM 4/2	63	43
to the order-circuit ATS	RSLV	56	38
to the recorded voice unit	KPMG	36	--
waiting	AO	40	--
Total		2620	1993

With respect to the communication lines with the order-circuit ATS, the load is determined approximately beginning with the fact that on the average it is about 5% of the outgoing long-distance load.

The number of lines to the recorded voice unit is reckoned calculating the number of calls from the local network subscribers of the zone (the number of these lines is calculated below).

The flow distribution of the incoming traffic over the outgoing routings is conveniently represented in the form of a checkerboard table. As an example,

Table 5.5 is presented. The basis for the traffic flow distribution is the percentage ratio of types of traffic and gravitation characteristic of the city in which the construction of the AMTS is planned obtained as a result of analyzing the statistical survey material.

Table 5.5.

Identification code of incoming equipment	Total incoming traffic	Outgoing equipment load, erlangs							
		IKTS	IKTNS	IKSLM-2	IKSLM-4	IKSLM-U	IKSLM-T	IKZM4/2	RSLV
VKTS	400	40	—	64	31,5	95,5	145	10	14
VKTNS	400	—	40	64	31,5	95,5	145	10	14
VKZSL-2	200	67	67	—	—	—	61	5	—
VKZSL-4	100	33	33	—	—	—	31	3	—
VKZSL-U	200	80	80	—	—	—	35	5	—
VKZSL-T	325	82	82	42	21	63	25	10	—
RUSK	334	81	81	30	16	46	70	—	10
VKS	34	17	17	—	—	—	—	—	—
Total	1993	400	400	200	100	300	512	43	38

Note. Tandem calling between like equipment VKTS-IKTS and VKTNS-IKTNS is provisionally provided for in the example. Under specific conditions a tandem call can be made between these systems in any combination.

The data on the ratio of the number and capacities of the crossbar and ten-step ATS in its zone are required to calculate the number of registers inasmuch as these offices are characterized by various methods of information reception.

The design solutions for interaction of the AMTS-4 with other long-distance telephone offices in the same city are reflected in the structural diagram of the authors and also in the table of the number of lines and magnitudes of the loads over these lines. These solutions are based on analyzing survey materials, the data from the master plans on the prospects for development, and they are reinforced by the corresponding agreeements.

The operating indices of the office are determined on the basis of an analysis of the statistical materials on long-distance traffic in the city where the AMTS is planned. The accumulated experience in the operation and maintenance of AMTS in different cities makes it possible to assume the following average operating indices when designing new offices:

Average length of a long-distance call for the following types of setups, minutes:	
automatic $T_{p.a}$	4.0
semiautomatic $T_{p.\pi/a}$	5.0
intrazonal $T_{p.z}$	3.0
Time for setting up a long-distance call, minutes:	
automatic T_a	0.5
semiautomatic $T_{\pi/a}$	0.6

Average number of calls (attempts) for one completed call:

automatic	2.5
semiautomatic in a common group with the automatic service channels	2.5
semiautomatic on a separate routing	2.7
outgoing over the SLM of the AMTS-ATS	1.5

Average busy time of a long-distance channel for one call of the following types, minutes:

automatic 5.25

$$T_{\text{к.а}} = T_{\text{а}} \cdot 2,5 + T_{\text{р.а}} = 0,5 \cdot 2,5 + 4,0 = 5,25$$

semiautomatic on a separate routing 6.62

$$T_{\text{к.п/а}} = T_{\text{п/а}} \cdot 2,7 + T_{\text{р.п/а}} = 0,6 \cdot 2,7 + 5,0 = 6,62$$

semiautomatic in a common group with automatic service channels 6.5

$$T_{\text{к.п/а}} = T_{\text{п/а}} \cdot 2,5 + T_{\text{р.п/а}} = 0,6 \cdot 2,5 + 5,0 = 6,5$$

Average busy time for one call in the case of automatic long-distance calling, minutes:

long distance channel 2.1

$$T_{\text{в.а}} = T_{\text{к.а}}/2,5 = 5,25/2,5 = 2,1$$

ZSL 2.5

$$T_{\text{B ZSL}} = T_{\text{в.а}} \cdot 1,2 = 2,1 \cdot 1,2 = 2,5$$

SLM 2.1

$$T_{\text{B SLM}} = T_{\text{в.а}} = 2,1$$

The same, for semiautomatic calls on an individual routing, minutes:

long-distance channel 2.5

$$T_{\text{в.п/а}} = T_{\text{к.п/а}}/2,7 = 6,62/2,7 = 2,5$$

SLM to the ATS for incoming calls 2.5

$$T_{\text{B SLM}_{\text{inp}}} = T_{\text{в.п/а}}$$

SLM to the ATS for outgoing calls 5.0

$$T_{B\ SLM_{out}} = (T_{k,\pi/a} + 1{,}5\,T_{\text{а}})/1{,}5 = (6{,}62 + 1{,}5\cdot 0{,}5)/1{,}5 = 5{,}0$$

Average busy time of one call for intrazonal calling, minutes:

SLM 4.25

$$T_{p\ SLM_z} = T_{\text{а}}\cdot 2{,}5 + T_{\text{p.з}} = 0{,}5\cdot 2{,}5 + 3{,}0 = 4{,}25$$

ZSL 5.1

$$T_{pZSL_z} = T_{p\ SLM_z}\cdot 1.2 = 5.1$$

Average busy time for one call in the case of intrazonal calling, minutes:

SLM 1.7

$$T_{B\ SLM_z} = T_{p\ SLM_z}/2.5 = 4.25/2.5 \approx 1.7$$

ZSL

$$T_{B\ ZSL_z} = T_{B\ SLM_z}\cdot 1.2 = 1.7\cdot 1.2 \approx 2.0$$

lines to the order-circuit ATS $T_{B.sl}$ 0.7

Average expenditures of telephone operator time, seconds

to receive a request over the ZSL $T_{request}$ 55

to receive a request over a long-distance channel (from the telephone operator) $T_{B.inp}$ 40

to give out simple information $T_{\pi.c}$ 30

to give out complex information $T_{c.c}$ 180

The average busy time of an MG information channel, seconds, per call consisting of the following elements:

average sentence time $T_{sentence}$ 6.5

waiting time for completion of the sentence $T_{comp.sent}$ 3.0

interval between sentences T_{int} 1.0

$$T_{MG} = T_{sent}\cdot 2 + T_{int}\cdot 2 + T_{comp.sent} = 6.5\cdot 2 + 1.0\cdot 2 + 3.0 = 18$$

The data on the average busy time of the AMTS-4 instruments to set up calls are defined primarily on the basis of the results of measurements performed on an experimental model of the equipment, and for some instruments, by calculation. The values of the average busy time of the instruments for different operating conditions are presented in Table 5.6.

The quality index norms, the explanations for which are presented above (see section 3.6) are expressed by the following values:

1) loss probability P;	
long-distance channels of the last-choice path,	
ZSL to the TsS and SLM from the TsS	0.01
ZSL from the GATS	0.005
SLM to the UVSM GATS	0.002
interfacility tandem lines and trunks to the cord type MK	0.001
SL from the order-circuit ATS	0.005
SL to the order-circuit ATS	0.002
SL to the MG unit	0.01
switching system	0.003
2) probability of waiting for release:	
IR, TR, VSR, ISR, PSR, SR	$P(>0)\le 0.01$
M and P	$P(>0)\le 0.65$
	$P(>13T_M)\le 0.001$
3) average waiting time for release M and P	0.03

Calculating the Number of Calls Coming to the Office in the PLH [Peak Load Hour]

The number of calls in the PLH is determined beginning with the magnitudes of the loads Y on the channel group and line group connected to the AMTS and the average busy time of a channel or line for one call T_B by the formula $B = Y\cdot 60/T_B$. Assuming that the values indicated in Tables 5.4 and 5.5 pertain to a specific office, let us calculate the number of calls for this example. The values of Y make up traffic flows along the routings indicated in Table 5.5, and the values of T_B are presented above.

1. Calls sent to the outgoing long-distance channels with single-frequency signal system (IKTS).

a) the number of calls coming over the ZSL from the GATS and the TsS of its zone, $B_{out.a} = Y_{in.a}\cdot 60/T_{B.a}$.

Here the load $Y_{out.a}$ is made up of the loads sent to the IKTS from the VKZSL-2 is 67 erlangs, from the VKZSL-3, 33 erlangs, from the VKZSL-U, 80 erlangs and from the VKZSL-T, 82 erlangs. The average busy time of a long-distance channel for one call with the automatic method of calling $T_{B.a}$ = 2.1 minutes. Thus, the number of calls will be

$$B_{out.a} = (67 + 33 + 80 + 82)6/2.1 = 7500.$$

b) the number of calls coming from the incoming long-distance channels of a single-frequency signal system with automatic tandem calling,

$$B_{tand} = Y_{tand}\cdot 60/T_{B,a} = 40\cdot 60/2.1 = 1143.$$

Table 5.6

Identification code of instruments	Operating conditions	Average busy time, sec
M	Setting up a call in switching system	0.0316
P	The same	0.0316
ZU-AB	Any call	0.095
ZU-CD	The same	0.095
MRI	The same	0.13
IR	Call:	
	with long-distance channel	22.13
	with a subscriber of its zone on the ten-step ATS	22.88
	The same, on the crossbar ATS with the long-distance switchboard operator	20.18 8.88
TR	Incoming terminal call to the ten-step ATS subscribers	10.0
	The same, to the crossbar ATS subscribers	4.0
	Tandem call	3.0
VSR	Terminal incoming call to ten-step ATS subscribers	20.0
	The same to crossbar ATS subscribers	15.0
	Tandem call: reception and output of of the complete number SBCabxxxxx considering a time delay of 7.7 seconds for determining the end of dialing	20.0
	reception and output of the complete number ABCabxxxxx	15.0
ISR	Terminal outgoing call:	
	reception and output of the complete ABCabxxxxx number	15.0
	reception of the abbreviated code and number 1 abxxxxx and output of 1 abxxxxx	11.0
PSR	Call:	
	with a long-distance channel	7.58
	with a subscriber of its zone on the ten-step ATS	10.63
	The same on a crossbar ATS	7.93
SR	Reception and output:	
	of the complete number ABCOxxx	9.0
	of the abreviated number ABCOxx considering a time delay of 7.5 seconds for determing the end of dialing	15.0

c) the number of calls coming from the order-circuit ATS subscribers via the VKS systems,

$$B_{out.sl} = Y_{out.sl} \cdot 60/T_{B.sl} = 17 \cdot 60/0.7 = 1460.$$

d) the number of calls coming from the MK via the RSK equipment in the case of semiautomatic calling,

$$B_{out.\pi/a} = Y_{out.\pi/a} \cdot 60/T_{B.\pi/a} = 81 \cdot 60/2.5 = 1944.$$

The total number of calls sent to the IKTS will be

$$B_{IKTS} = 7500 + 1143 + 1460 + 1944 = 12\,047.$$

Let us determine the total number of calls sent to the long-distance channels of the two-frequency signal system (IKTNS) analogously. In our example $B_{IKTNS} = 12,047$.

2. Calls coming to the incoming long-distance channels of the single-frequency signal system (VKTS).

a) The number of calls to the GAST and the zone TsS with automatic calling

$$B_{inp.a} = Y_{inp.a} \cdot 60/T_{B.a}.$$

The value of $Y_{inp.a}$ is made up of the traffic flows sent from the VKTS to the IKSLM-2 systems, 64 erlangs, to the IKSLM-4, 31.5 erlangs, the IKSLM-U, 95.5 erlangs, and IKSLM-T, 145 erlangs. Consequently,

$$B_{inp.a} = (64,0 + 31,5 + 95,5 + 145)\,60/2,1 = 9600.$$

b) The number of calls coming to the outgoing longdistance channels for automatic tandem calling,

$$B_{tandem} = 1143 \text{ (see item 1b)}.$$

c) The number of calls coming to the order-circuit ATS subscribers via the RSLV systems,

$$B_{inp.sl} = Y_{inp.sl} \cdot 60/T_{inp.sl} = 14 \cdot 60/0.7 = 1200.$$

d) The number of calls coming to the MK via the IKZM 4/2 system for semiautomatic calling -- reception of a request from the opposing office operator,

$$B_{inp.\pi/a} = Y_{inp.\pi/a} \cdot 3600/T_{B.inp.\pi/a} = 10 \cdot 3600/40 = 900.$$

The total number of calls coming over the VKTS,

$$B_{VKTS} = 9600 + 1143 \_ 1200 + 900 = 12,843.$$

The total number of calls coming over the incoming channels of the two-frequency signal system (VKTNS) is determined analogously. For our example $B_{VKTNS} = 12,843$.

3. The calls coming over the ZSL to the MK via the IKZM 4/2 system with semiautomatic servicing (including approximately 50% requests and 50% information).

a) The number of calls by request

$$B_{req.\pi/a} = Y_{req} \cdot 0.5 \cdot 3600/T_{req} = (5 + 3 + 5 + 10) \cdot 0.5 \cdot 3600/55 = 753.$$

b) the number of calls giving out simple and complex information to the subscribers (let us provisionally assume that the information calls are half and half simple "πc" and complex "cc")

$$B_{inf} = B_{\pi c} + B_{cc} = Y_{req} \cdot 0.25 \cdot 3600/T_{\pi c} + Y_{req} \cdot 0.25 \cdot 3600/T_{cc} = (5 + 3 + 5 + 10) \cdot 0.25 \cdot 3600/30 + (5 + 3 + 5 + 10) \cdot 0.5 \cdot 3600/180 = 805.$$

The total number of calls coming over the ZSL to the MK,

$$B_{ZSL\pi/a} = B_{req.\pi/a} + B_{inf} = 753 + 805 = 1558.$$

4. The calls serviced by the ZSL_z and SLM_z for intrazonal service.

a) The number of outgoing calls from the GATS to the zone TsS via the IKSLM-T systems

$$B_{z.out} = Y_{z.out} \cdot 60/T_{B_{SLM_z}} = (61 + 31 + 35) \cdot 60/1.7 = 4482.$$

b) The number of incoming calls over the ZSL_z from the zone TsS (VKZSL-T) to the GATS via the IKSLM-2, IKSLM-4, IKSLM-U systems

$$B_{z.inp} = Y_{z.inp} \cdot 60/T_{B\,ZSL_z} = (42 + 21 + 63)60/2.0 = 3780.$$

c) The number of tandem calls inside the zone via the VKZSL-T and the IKSLM-T systems

$$B_{z.tand} = Y_{z.tand} \cdot 60/T_{B\ SLM_z} = 25 \cdot 60/1.7 = 882.$$

The total number of calls for intrazonal service

$$B_z = B_{z.out} + B_{z.in} + B_{z.tand} = 4482 + 3780 + 882 = 9144.$$

The total number of calls coming over the ZSL from the GATS and the TsS of its zone,

$$B_{ZSL} = B_{out.a(IKTS)} + B_{out.a(IKTNS)} + B_z + B_{ZSL_{\pi/a}} = 7500 + 7500 + 9144 + 1558 = 25,702.$$

5. The calls sent from the long-distance switchboards for outgoing semiautomatic connection via the RUS systems to the GATS and the TsS of its zone:

$$V_{SLM_{\pi/a}} = Y_{SLM_{\pi/a}} \cdot 60/T_{B\ SLM_{\pi/a}} = (30 + 16 + 46 + 70)60/5.0 = 1944.$$

6. Calls routed from the MK (RUSK) to the order-circuit ATS (RSLV),

$$B_{MK\ sl} = Y_{MK\ sl} \cdot 60/T_{B.sl} = 10 \cdot 60/0.7 = 857.$$

7. Calls coming from the GATS and TsS of its zone to the recorded voice unit MG.

The recorded voice unit contains two information channels: "number dialed incorrectly" and "call the operator." Beginning with operating experience, it is possible to assume that the number of calls coming to the "number dialed incorrectly" information channel is about 10% of the total number of calls coming over the ZSL, and to the "call the operator" channel, about 5%. Thus,

$$B_{MG1} = B_{ZSL} \cdot 0.1 = 25702 \cdot 0.1 = 2570;$$

$$B_{MG2} = B_{ZSL} \cdot 0.05 = 25702 \cdot 0.05 = 1285.$$

The total number of calls in the PLH which must be serviced by the switching system

$$B_{KS} = B_{IKTS} + B_{IKTNS} = B_{VKTS} + B_{VKTNS} + B_{ZSL\pi/a} + B_{MK\ sl} + B_{MG1} +$$

$$B_{MG2} = 12,047 + 12,047 + 9600 + 1200 + 900 + 9600 + 1200 + 900 +$$

$$1588 + 9144 + 1944 + 857 + 2570 + 1285 = 64,852.$$

Calculating the Number of Office Devices

The number of devices of all types is determined depending on the load which must be serviced by group of devices for satisfaction of the corresponding quality index norms. The magnitude of the load is determined by the number of calls in the PLH and the average busy time of the devices to service one call.

Switching System and Basic Control Units. The number of switching modules and their capacity are calculated beginning with the total number of lines and channels connected to the office and the load which the switching system must service.

On the basis of the data in Table 5.4 a preliminary selection is made of the type of modules, and their number is determined as a function of the number of lines and channels. Subsequent correction of the number of modules is made beginning with the size of the load coming to one module considering observation of the operating quality index norms of the switching system.

For our example, as is obvious from Table 5.4, the total number of channels in the lines will be $N_{inp} = 3105$; $N_{out} = 2620$. The load which the switching system must service is: $Y_{in} = Y_{out}$ = 1993 erlangs. With respect to the number of lines connected to the switching bank, first we select the type of 400-400-400 modules. Then the number of modules $N_{AB} = N_{in}/400 = 3105/400 = 8$[1]; $N_{CD} = N_{out}/400 = 2620/400 = 7$.

Let us check the reliability of the obtained number of modules by the magnitude of the load per module. As was stated earlier (see section 5.2) in order to satisfy the quality index norms the average load on one 400-400-400 module must not exceed 240 erlangs.

In our example $Y_{AB} = 1992/8 = 250$ erlangs, and $Y_{CD} = 1993/7 = 285$ erlangs, that is, the load on the module is higher than the given value. Therefore the number of modules must be increased to $N_{AB} = N_{CD} = 1993/240 = 9$. Here the points of the bank remaining unequipped are distributed uniformly with respect to modules. Considering that each 400-400-400 module consists of 8 frames, the total number of frames of the switching system will be $N_{frame\ AB} = N_{AB} \cdot 8 = 9 \cdot 8 = 72$; $N_{frame\ CD} = N_{CD} = 9 \cdot 8 = 72$.

The memories of the modules ZU-AB and ZU-CD are provided for in accordance with the number of corresponding modules, for each module is serviced by its own ZU: $N_{ZU-AB} = N_{AB} = 9$; $N_{ZU-CD} = N_{CD} = 9$. Beginning with the fact that on one frame there are two ZU it is required that: $N_{frame\ ZU-AB} = 9/2 = 5$; $N_{frame\ ZU-CD} = 9/2 = 5$.

The marker M is checked for correspondence of the total number of calls which it must service to its carrying capacity. As is obvious from the results of calculating the number of calls, for our example it will be: $B_{KC} = B_M$ = 64,852, which does not exceed the carrying capacity of the marker system (70,000 calls).

For the specific design if the number of calls obtained turns out to be more than 70,000, it is necessary to decrease the number of channels and lines connected to the office equipment correspondingly.

The calculation of the volume of decoder equipment P consists in the fact that depending on the number of outgoing routings (4R) connected to the office and the total number of routing numbers (3R) (AB, ABC, ABCab, 2ab), the number of composite frames required for the modules considering redundancy is determined.

For our example let us assume that the number of outgoing routings is 120, the number of routing numbers 400. The routing numbers are distributed as follows: AB -- 15, ABC -- 300, ABCab -- 7, 2ab -- 78.

As was stated above (see section 5.5) each composite frame has 120 routing number modules and 80 outgoing routing modules or 240 routing number modules. For placement of 120 4R and 403 R modules, 120/80 + 400/120 = 2 4R frames + 4 3R frames are needed, that is, a total of six frames, and considering redundancy 6 + 6 = 12 composite frames. These frames can be placed in six composite bays (see Figure 5.4).

---

[1] Here and hereafter values are rounded to the nearest whole number.

In addition to the composite bays, the decoder equipment includes one central bay in which the central parts of two decoders are placed and one adapter bay for testing the decoders. In all, the given office requires 6 + 2 = 8 decoder bays.

The number of waiting equipment AO bays is determined (analogously to the decoder) from calculating the number of routing numbers 3C and the outgoing routings 4C. Since 125 3C modules and 90 4C modules or 250 3C modules are placed in one composite bay, for our example 400/125 + 120/90 = 4 3C frames + 2 4C frames, or a total of six frames are required. These frames can be placed in 3·2 = 6 composite bays. Considering the two central bays, a total of 6 + 2 = 8 bays are required for the waiting equipment AO.

Register Equipment -- Register Finding Stage and Registers. As was pointed out above, in the RI stage a system with limited waiting is adopted. In connection with the fact that there are no methods of calculating the link systems with waiting published in the literature, an approximate calculation method was used based on expressing the parameters of a system with waiting in terms of the parameters of a system with losses. On the basis of this method curves were constructed for calculating the number of registers (Figure 5.10) expressing the waiting probability $P > 0$ as a function of load for service quality $P(>0) \leq 0.01$.

The TR, VSR, RSR, PSR and SR registers are connected to the outputs of the RI module groups. The number of RI modules in the group depends on the magnitude of the incoming load, but it must be no more than two. The outputs of both modules in the group are paralleled. The IR registers are included at the outputs of only one RI module. For connection of the IR, VSR, ISR and SR registers it is expedient to use the type 120-100-30 module; for connection of the TR and the PSR registers, modules 160-100-20. The 200-100-10 modules are used to connect the TR to the UAK.

Calculation of the RI stage in each section of the system consists in determining the number of RI modules and registers connected to the outputs of these modules. The number of RI modules is determined in advance beginning with the number of line systems subject to connection to the given stage. Then the total load on the given type of registers in the load for one group of modules is calculated. The number of registers connected to one group of modules required for this load must not exceed the capacity of the RI stage at the module output. Otherwise the number of RI modules must be increased correspondingly.

The magnitude of the load on the registers depends on the number of calls and the average busy time of the register to service one call. If the registers of the investigated type service only one type of call, the busy time of the register is assumed to be constant. If the registers service several types of calls, the average busy time of the register for one call is defined as the weighted mean value. The data on the average busy time of the registers are indicated in Table 5.6.

The results of calculating the loads with respect to each type of register permit determination of their number using the curves in Figure 5.10. For determining the number of racks of each type of register, the data in Table 5.3 on the assembly of the racks with the registers are used.

Let us calculate the register equipment for our example.

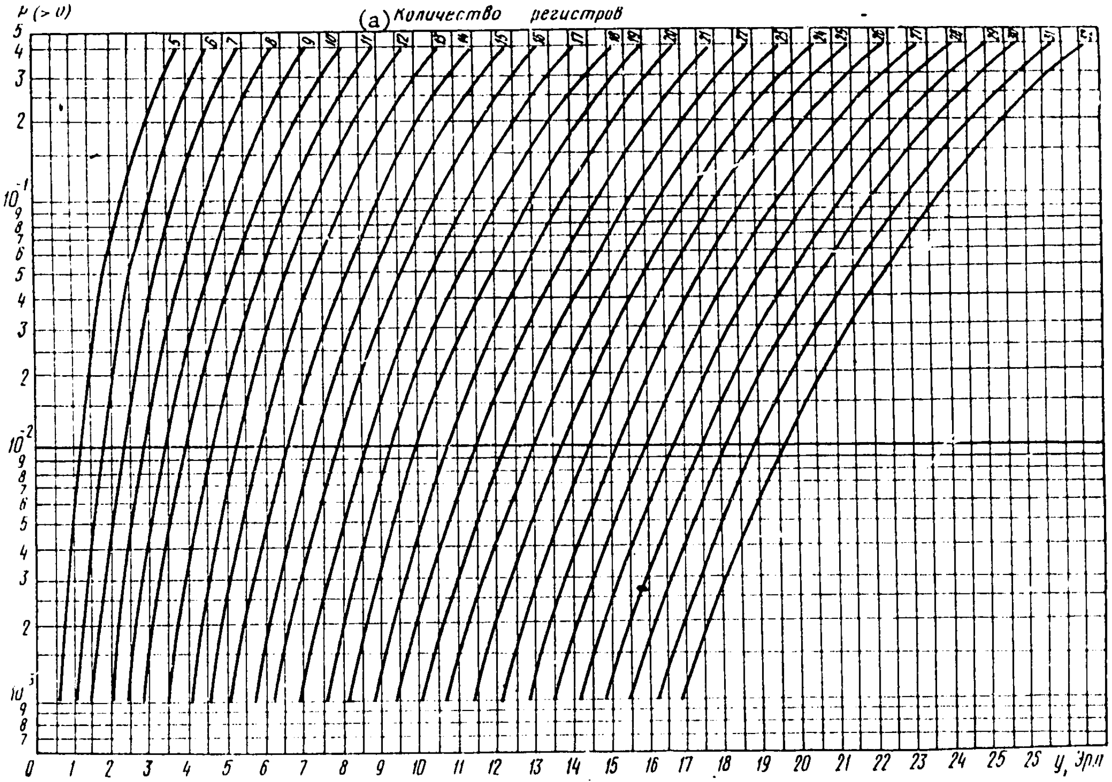

Figure 5.10. Curves for calculating registers.

Key: a. number of registers

IR Registers and RI_{ZSL-IR} Stage. The type 120-100-30 RI modules are used to connect the IR. The number of RI modules is determined in advance by the number of ZSL connected to the stage inputs:

$$N_{RI\ ZSL-IR} = N_{ZSL}/120.$$

The total number of ZSL is determined according to Table 5.4:

$$N_{ZSL} = N_{VKZSL-2} + N_{VKZSL-4} + N_{VKZSL-U} + N_{VKZSL-T}.$$

For our example N_{ZSL} = 400 + 200 + 400 + 650 = 1650. Then the preliminary number of RI modules

$$N_{RI\ ZSL-IR} = 1650/120 = 14.$$

The total load on the group of outgoing registers Y_{IR} is made up of three terms:

1) the loads with respect to servicing calls coming to the outgoing long-distance channels with automatic calling — $Y_{out.a}$;

2) the loads for servicing calls for automatic intrazonal service — Y_z;

3) the loads to service calls coming over the ZSL to the MK operators for semiautomatic calling -- $Y_{ZSL_{\pi/a}}$, that is,

$$Y_{IR} = Y_{out.a} + Y_z + Y_{ZSL_{\pi/a}}.$$

Let us determine the load $Y_{out.a}$ by the formula

$$Y_{out.a} = B_{out.a} T_{IR_M}/3600.$$

The number of calls $B_{out.a}$ made up of the calls routed to the IKTS and the IKTNS, that is, $B_{out.a} = 7500 + 7500 = 15,000$. The average busy time of the IR for calls to the long-distance channel (see Table 5.6) $T_{IR_M} = 22.13$ seconds. Thus,

$$Y_{out.a} = 15,000 \cdot 22.13/3600 = 91 \text{ erlangs}.$$

When determining the size of the load Y_z it is necessary to consider the different busy time of the IR to service calls to the crossbar (K) ATS subscribers and the ten-step (DSh) ATS subscribers of its zone. Beginning with the ratio of the number of ATS of these two types (known from the initial data), let us calculate the busy time of the register to service one call on the average: $T^K_{IR_z} P + T^{DSh}_{IR_z}(1 - P)$, where P is the proportion of calls to the crossbar ATS. In our example $P = 0.5$. Using the data of Table 5.6 on the busy time of the IR for setting up calls with both types of ATS, let us determine the average value: $T_{IR_z} = 20.18 \cdot 0.5 + 22.88 (1 - 0.5) = 21.53$ sec. Substituting the values obtained in the formula, we find

$$Y_z = B_z T_{IR_z}/3600 = 9144 \cdot 21.53/3600 = 54.6 \text{ erlangs}.$$

Finally, let us determine the size of the load

$$Y_{ZSL_{\pi/a}} = B_{ZSL_{\pi/a}} T_{IR\ MK}/3600 = 1558 \cdot 8.88/3600 = 3.84 \text{ erlangs}.$$

Thus, the total load on the IR is

$$Y_{IR} = 91 + 54.6 + 3.84 = 149.44 \text{ erlangs}.$$

In order to calculate the number of registers and more precisely determine the number of RI modules, let us determine the average load for RI modules:

$$Y_{mod} = Y_{IR}/14 = 149.44/14 = 10.65 \text{ erlangs.}$$

Using the curves in Figure 5.10, we find that for a load of 10.65 erlangs, 20 registers are required, which does not exceed the number of outputs of the RI module (30 outputs). A total of $N_{IR} = 14 \cdot 20 = 280$ of the IR registers are required for the 14 IR modules.

The number of racks for the RI_{ZSL-IR} stage is determined beginning with the fact that one module is placed in two racks RI-1 and RI-2: $N_{rack RI_{ZSL-IR}} = 14 \cdot 2 = 28$. The number of IR racks is determined by the data in Table 5.3. It is obvious from this table, for the group of 20 registers 9 normal racks and two composite racks are required.

The number of IR determined by calculation is divided into groups of 20 registers each. The number of such groups is 280/20 = 14. The number of IR-N racks required is $14 \cdot 9 = 126$, and IR-K racks, $14 \cdot 2 = 28$. In all 126 + 28 = 154 IR racks are required.

TR Registers and $RI_{VKTS-TR}$ Stage. For connecting the TR, the RI modules of the 160-100-20 type are used. In accordance with the number of VKTS, there must be

$$N_{RI_{VKTS-TR}} = N_{VKTS}/160 = 500/160 = 4$$

such modules. Let us divide the number of RI modules into two groups of two modules per group.

The total load on the tandem registers Y_{tan} is made up of the following:

the load $Y_{in.ok}$ for servicing calls coming over the incoming long-distance channels with single-frequency signal system (VKTS) to the crossbar and ten-step ATS of its zone for automatic and semiautomatic long-distance calling;

the load Y_{tandem} for servicing tandem calls from the VKTS to the outgoing long-distance channels.

Formulas are presented below for determining the indicated loads:

$$Y_{TR} = Y_{in.ok} + Y_{tan}; \quad Y_{in.ok} = (B_{in.a} + B_{in.sl})T_{TR.ok}/3600;$$

$$T_{TR\ ok} = T^{K}_{TR\ ok}P + T^{DSh}_{TR\ ok}(1 - P) = 4 \cdot 0.5 + 10 \cdot 0.5 = 7 \text{ seconds;}$$

$$Y_{in.ok} = (9600 + 1200) \cdot 7.0/3600 = 21 \text{ erlangs;}$$

$$Y_{tan} = B_{tan}T_{TR\ tan}/3600 = 1143 \cdot 3.0/3600 = 1 \text{ erlang.}$$

Thus, the total load $Y_{TR} = 21 + 1 = 22$ erlangs. Let us divide it into two parts, with respect to the number of groups of the RI modules. The load on one group of RI modules is $Y_{gr} = Y_{TR}/2 = 22/2 = 11.0$ erlangs. Twenty registers (determined by the curves in Figure 5.10) are connected to one group of RI modules. Then for two groups of RI modules it is necessary to have 40 registers. The number of RI racks $N_{racks^{RI}_{VKTS-TR}} = 4 \cdot 2 = 8$.

The number of TR racks is determined beginning with the fact that for a group of 20 registers six TR-N racks are required, and one TR-K rack; consequently for two groups of registers, 12 TR-N racks and two TR-K racks are required. In all it is necessary to have 12 + 2 = 14 Tr racks at the office.

VSR Registers and $RI_{VKTNS-VSR}$ Stage. The type 120-100-30 RI modules are used for connecting the VSR. According to the number of VKTNS, there must be

$$N_{RI_{VKTNS-VSR}} = N_{VKTNS}/120 = 500/120 = 5$$

such modules.

The incoming matching register VSR services calls coming over the incoming long-distance channels of the two-frequency signal system via the VKTNS systems with incoming terminal and tandem calls. The calculation of the load on the VSR is analogous to calculating the load on the TR (with substitution of different values of B and T).

The average busy time of VSR when setting up an incoming terminal call $T_{VSR\ ok} = T^{K}_{VSR\ ok} P + T^{DSh}_{VSR\ ok}(1 - P) = 15 \cdot 0.5 + 20 \cdot 0.5 = 17.5$ seconds. The average busy time of the VSR for setting up a tandem call $T_{VSR_{tan}} = 20 \cdot 0.5 + 15 \cdot 0.5 = 17.5$ seconds.

The total load on the VSR

$$Y_{VSR} = (B_{in.a} + B_{in.sl})T_{VSR\ ok} + B_{tan}T_{VSR\ tan}/3600 = [(9600 + 1200) \cdot 17.5 + 1143 \cdot 17.5]/3600 = 58.3 \text{ erlangs.}$$

Let us divide this load into five parts according to the number of RI modules. The average load on a group of registers connected to one module $Y_{mod} = 58.3/5 = 11.7$ erlangs. The number of registers in the group (found by the curves in Figure 5.10) for this load will be 22 VSR. In all for five groups $N_{VSR} = 22 \cdot 5 = 110$ registers are required. The number of racks for the RI stage $N_{rack^{RI}_{VKTN-VSR}} = 5 \cdot 2 = 10$.

The number of racks with registers is determined beginning with the fact that for a group containing 20 registers, one VSR-K rack and six VSR-N racks are required. Then for 110/20 = 6 groups of registers it is necessary to have six VSR-K racks in which $6 \cdot 2 = 12$ registers are placed. Three registers each are placed in the VSR-N racks. Beginning with the fact that the number of VSR-N racks is (110-12)/3 = 33, a total of 33 + 6 = 39 VSR racks are required.

ISR Registers and $RI_{IKTNS-ISR}$ State. For connecting the ISR, the type 120-100-30 RI modules are used. With respect to number of IKTNS, it is necessary to have

$$N_{RI_{IKTNS-ISR}} = N_{IKTNS}/120 = 500/120 = 5$$

such modules.

The outgoing matching register ISR services the calls routed to the long-distance channels of the two-frequency signal system via the IKTNS systems for automatic and semiautomatic calling.

The busy time of the ISR for one outgoing call (see Table 5.6) is different for the calls for which the next station is tandem (reception and output of the complete code and the number) and calls for which the next station is terminal (reception and output of an abreviated code and number). The average busy time of the ISR depends on the ratio of these types of calls. For our example we shall assume that they are equal. Consequently, $T_{ISR} = 15 \cdot 0.5 + 11 \cdot 0.5 =$ 13 seconds. The total load on the ISR

$$Y_{ISR} = B_{IKTNS}T_{ISR}/3600 = 12047 \cdot 13.0/3600 = 43.5 \text{ erlangs.}$$

Beginning with the size of the load, five RI modules can be broken down into four groups of which three will be made up of one module each and one will be made up of two modules. The load on the group containing one module, $Y_{gr1-3} = 43.5 \cdot 120/500 =$ 10.4 erlangs. The load on the group containing two modules, $Y_{gr\ 4} = 43.5 -$ $10.4 \cdot 3 = 12.3$ erlangs.

The number of ISR in one of the first to the third groups is 20, and in the fourth group, 22. Consequently, a total of $N_{ISR} = 20 \cdot 3 + 22 = 82$ registers are required.

The number of racks for the RI stage $N_{racks\ IR_{IKTNS-ISR}} = 5 \cdot 2 = 10$. The number of ISR-K racks depends on the required number of multifrequency oscillators which are installed in them. Inasmuch as two multifrequency oscillators service a group of 60 registers, for 82 ISR, it is necessary to have $N_{gen} = 82/60$ = two groups ×2 of oscillators, that is, four oscillators. Considering that one oscillator is placed in a rack a total of four ISR-K racks are required. The number of ISR which can be placed in these racks (see Table 5.3) is $4 \cdot 4 = 16$. For the remaining registers it is necessary to have $(82 - 16)/4$, that is, 17 ISR-N racks.

Thus, the office must have a total of $N_{rack\ ISR} = 4 + 17 = 21$ racks.

PSR Registers and $RI_{RUSK-PSR}$ Stage. The type 150-100-20 modules are used to connect the PSR. According to the number of RUSK it is necessary to have

$$N_{RI_{RUSK-PSR}} = N_{RUSK}/160 = 406/160 = 3$$

such racks.

The semiautomatic service matching register PSR services the outgoing semiautomatic calling over the long-distance channels. The load on this register Y_{PSR} is made up of the following

the load $Y_{out.\pi/a}$ from the long-distance switchboards routed to the outgoing long-distance channels (IKTS, IKTNS) for semiautomatic calling;

the load $Y_{SLM\pi/a}$ routed from the MK over the SLM to the crossbar and the ten-step ATS of its zone to provide subscribers with long-distance service. A formula is presented below for calculating Y_{PSR}:

$$Y_{PSR} = (B_{out.\pi/a}T_{PSR\pi/a} + B_{SLM_{\pi/a}}T_{PSR_z})/3600 = [(1944 + 1944)\cdot 7.58 + 1944(10.63\cdot 0.5 + 7.93\cdot 0.5)]/3600 = 13.2 \text{ erlangs.}$$

The three RI modules obtained by the calculation (and the load, correspondingly) are divided into two groups: one contains two modules and the other one module. In the group of one module it is expedient to equip all 160 inputs of the module. Then the load on this group $Y_{1mod} = 13.2\cdot 160/406 = 5.2$ erlangs. The load on the group of two modules $Y_{2mod} = 13.2 - 5.2 = 8.0$ erlangs. The number of PSR will be $N_{PSR_{1mod}} = 12$ and $N_{PSR_{2mod}} = 16$, respectively. At the station there will be a total of $N_{PSR} = 12 + 16 = 28$ registers.

The number of RI racks for three modules $N_{rackRI_{RUSK-PSR}} = 3\cdot 2 = 6$. For 28 registers for semiautomatic service, $28/20 = 2$ PSR-K racks are required in which $2\cdot 3 = 6$ PSR registers can be installed. The remaining registers are installed in the $(28 - 6)/4 = 6$ PSR-N racks.

A total of $N_{rackPSR} = 2 + 6 = 8$ racks are required for the office.

SR Registers and RI_{VKS-SR} Stage. Modules of the 120-100-30 type are used to connect the SR registers. In accordance with the number of VKS there must be $N_{RI_{VKS-SR}} = 49/120 = 1$ such rack.

The order-circuit service registers SR service the calls between subscribers of different order-circuit ATS within one zone and the order-circuit ATS in different zones. The average busy time of SR for one call is determined depending on the ratio of these types of calls. For example we assume that the number of calls within its zone will be 50% of the total.

The load on the SR will be

$$Y_{SR} = B_{out.sl}T_{SR}/3600 = (1460 + 1460)(9.0\cdot 0.5 + 15.0\cdot 0.5)/3600 = 10 \text{ erlangs.}$$

This load (according to the curves in Figure 5.10) corresponds to 19 order-circuit service registers.

The RI stage consists of one module, that is, two racks. For placement of 19 SR, it is necessary to have one SR-K rack in which three SR registers are installed. The remaining 19 - 3 = 16 registers are placed in 16/4 = 4 SR-N bays. At the office a total of $N_{rack\ SR} = 1 + 4 = 5$ SR racks are required. The total number of registers at the office $N_{reg} = 280 + 40 + 110 + 82 + 28 + 19 = 559$. The total number of RI racks $N_{rack\ RI} = 28 + 8 + 10 + 6 + 2 = 64$. The total number of racks with registers $N_{rack\ reg} = 154 + 14 + 39 + 21 + 8 + 5 = 241$.

Generating Equipment. The number of signal frequency generators for the single-frequency (2600 hertz) and two-frequency (1200 and 1600 hertz) signal systems is determined calculating the number of channels which a group of two generators can service for given service quality norms.

The probability of simultaneous sending of a signal frequency over the channels depends on the number of calls coming to the channels connected to the group from the two generators, the average duration of arrival of the interaction signals over the channel and the number of simultaneously busy channels. As a result of calculating the number of channels which can be connected to the group of generators it is established that it is possible to connect up to 400 channels (incoming and outgoing) to the two single-frequency generators, and up to 300 to two-frequency generators. For our example the number of generators is: single-frequency (500 + 500)/400 = 3 groups × 2 = 6, two-frequency (500 + 500)/300 = 4 groups × 2 = 8.

The number of multifrequency generators MChG is determined beginning with the number of registers which one generator can service. The number of registers which can be connected to a group of two generators MChG is 40 TR or 60 IR, VSR, ISR, PSR or SR registers. In our examples for 40 TR two generators are required, and for IR, VSR, ISR, PSR and SR (322 + 110 + 82 + 28 + 19)/60 = 10 groups × 2 = 20 generators, respectively. A total of 2 + 20 = 22 generators MCHG are required for the office.

Automatic Charge Computing Equipment AUS. The automatic charge computing equipment constructed by the group principle consists of modules, each of which services 120 ZSL systems. One module includes seven bays: AUS-I-1, AUS-I-2, AUS-II, AUS-III, AUS-IV, AUS-V, AUS-V-1. The AUS-IV bay is common to all modules.

In our example the total number of VKZSL is 1650 sets; consequently, it is necessary to have 1650/120 ≈ 13.8, that is, 14 modules. The total number of racks for the AUS (considering the fact that the AUS-IV rack is common to two modules) will be $6 \cdot 14 + 1 \cdot 7 = 91$.

Equipment for Connecting the Recorded Voice KPMG. The number of KPMG systems is determined depending on the load on the "incorrectly dialed number" and "call the operator" channels for observation of the given call loss probability norm as a result of the PMG being busy equal to P = 0.01.

The number of calls coming from the ATS subscribers of its zone to the "incorrectly dialed number" information channel of the MG is approximately 10-15% of the total number of calls, and to the "call the operator" information channel, about 3-5%. The duration of each sentence is 4-6 seconds. On the average the sentence is repeated twice. Considering the intervals between sentences and the waiting time, the busy time of the MG for one call will be about 18 seconds. The number of KPMG, depending on the load for P = 0.01, can be determined using the Erlang tables.

In our example the load on the information channels

$$Y_{MG1} = B_{MG1}T_{MG}/3600 = 2570\cdot 10/3600 = 12.85 \text{ erlangs};$$

$$Y_{MG2} = B_{MG2}T_{MG}/3600 = 1285\cdot 18/3600 = 6.4 \text{ erlangs}.$$

The number of KPMG for this load will be: 22 for MG1 and 14 for MG2, a total of 36 sets.

Switching Equipment. The procedure for calculating the number of cord type switchboard positions has been fully discussed in [10]. For calculation of the number of cordless type switchboards the same procedure can be used. As the observation data and time studies show, the average time spent by the telephone operator on setting up a call is approximately the same for switchboards of both types.

Order-Circuit ATS. As has already been stated, the ATS K-100/2000 equipment is used as the order-circuit ATS. The procedure for calculating such offices is discussed in [11].

Monitoring and Testing Equipment KIA. The KIA connecting devices, as has already been pointed out above, contain rack and group switches for the incoming line equipment and registers and also group switches for the adapters. In order to calculate the number of switches, we determine the number of racks with incoming line equipment, using data on the number of channels and lines connected to the office (see Table 5.4) and also data on the plant makeup of the racks. The office contains the following number of racks with incoming systems: 32 VKTS (since 500/16 = 31.3); 32 VKTNS (500/16 = 31.3); 25 VKZSL-2 (400/16 = 25); 13 VKZSL-4 (200/16 = 12.5); 25 VKZSL-U (400/16 = 25); 41 VKZSL-T (650/16 = 40.6). At the office there are a total of 168 racks with incoming systems. Correspondingly, there are 168 rack switches for incoming sets.

The number of racks with registers (from the calculation example) is 241. Correspondingly, the number of rack switches for the registers is 241.

The number of group switches of the third stage S3P is 168/10 + 241/10 = 42, and the second stage S2P 42/10 = 5.

The total number of adapters at the office is as follows: 1 VAR-M, 1 VA-M, 1 VA-R, VA-P, 1 VAR-P, and 32 VAR-RI (according to the number of RI modules). There are a total of 37 adapters. The number of group switches S3P for the adapters 37/20 = 2.

The number of rack, group and combining switches for the outgoing line systems of the long-distance channels and the SLM (IK) is determined as a function of the number of corresponding racks.

The number of IK racks (in accordance with their makeup) will be: 21 IKTS (since 500/24 = 20.8), 32 IKTNS (500/16 = 31.2), 9 IKSLM-2 (250/28 = 8.9), 8 IKSLM-4 (125/16 = 7.8), 24 IKSLM-U (375/16 = 23.4), 43 IKSLM-T (676/16 = 42.3).

In all, the office has 137 racks with outgoing systems. Correspondingly, the number of rack switches SP for the IK is 137. The number of group switches S3P is 137/5 = 28, and the number of combining switches SDP is 28/10 = 3.

The number of KIA-1 systems required to check the equipment, channels and lines depends on the test programs, their periodicity and time spent on each test. The load on the KIA-1 has a nonrandom nature. The source of the load is checks in the cycle or by request entered in the corresponding test programs. When checking in the cycle of devices, channels, and lines, all devices in a group are checked in accordance with the program tests.

For the register equipment the test program consists of checking the functional states and measuring the time parameters, and the check periodicity is recommended as once a month. It is recommended that the terminal line equipment be checked by an abreviated program once a month, and by the full program once a quarter. It is recommended that the control units -- markers, decoders and waiting equipment -- be checked by the complex program twice a month.

The busy time of the KIA-1 checking channels in a cycle by the "interaction signals + residual damping + noise" program is: for the channel in good working order 3 minutes; for a channel not up to normal 4.5 minutes; for a damaged channel 5.0 minutes. The busy time of the KIA-1 when checking channels on request is 5.5 minutes. When checking channels in the cycle it is provisionally assumed that: the number of channels not up to normal is 10%, the number of damaged channels is 5% of the total number of channels. The number of tests on request is assumed to be 70% of the total damaged channels. The periodicity of checking the channels can be different depending on the local conditions: 1, 2 or 4 times a month.

For calculating the number of KIA-1 systems, the total time required to perform all the necessary checks during the year is determined, and then the average test time per day (T_{day}). Knowing the value of T_{day} and the use time of one KIA-1 system per day, the required number of KIA-1 systems is determined. The use time of one KIA-1 system for checking equipment and channels is about 20 hours per day (2 hours per day are alloted for self-monitoring and 1 to 2 hours for preventive checking and repair).

The number of KIA-2 systems depends on the number of requests to check channels coming from the KIA-1 of other offices. Since the load sources for the KIA-2 are several KIA-1, it is possible to consider that the load on the KIA-2 is of a random nature. Beginning with this fact, the number of KIA systems is determined by the Erlang tables for P = 0.01. According to the preliminary observation data, the busy time of the KIA-2 per day is 90% of the busy time per day of the KIA-1 for checking channels.

5.7. Purpose and Operating Capabilities of the UAK

The automated switching centers are designed to set up tandem long-distance calls and for creation of bypass paths. In accordance with the adopted principle of construction of the long-distance telephone network discussed in Chapter 1, automatic switching centers of two classes are organized on this network: UAK-I and UAK-II. The main centers are the UAK-I which are connected to each other by the "each-to-each" principle by groups of channels of sufficient capacity (no less than

36-48 channels on each routing). Each UAK-I is connected to several UAK-2, and the latter are connected to the AMTS office. For creation of the bypass paths, the UAK-I can also be connected directly to the AMTS. Thus, direct groups of channels are connected to the UAK-I: to all other UAK-I, to the UAK-II and the AMTS of its territory; to the UAK-II and the AMTS of other territories. In addition, channels to the long-distance office can be connected to the UAK-I equipment.

The UAK-II equipment has direct groups of channels connected to it: to the UAK-I, UAK-II and AMTS of other territories; to the UAK-I and AMTS of its territory.

The UAK-I and UAK-II equipment is also used to set up tandem calls for communication of the computer centers and departmental communications networks.

The UAK equipment is standardized to the maximum with the AMTS-4 equipment. The switching system, the line equipment, the switching system marker, decoder, waiting equipment, registers and central part of the KIA are universal, identically suitable for the AMTS and for the UAK. Just as in the AMTS-4, the UAK equipment includes the order-circuit ATS designed to organize the intraoffice and interoffice order-circuit service. The subscribers of the order-circuit ATS are operative subscribers of the UAK -- supervisory and duty technical personnel. The order-circuit ATS has access via the switching system of the UAK to the long-distance network channels. The capacity of the line bank of the switching system of the UAK (analogously to the AMTS-4) is within the limits from 400 incoming-400 outgoing to 6000 incoming-6000 outgoing bank points. Here the capacity can be increased by modules beginning with two incoming and two outgoing modules.

5.8. Structural Diagram of the UAK and Operation of the Devices During the Process of Setting up Calls

As is obvious from the structural diagram (see Figure 5.1), the basic equipment of the UAK includes the following:

the line equipment of the long-distance channels and lines for communications with the order-circuit ATS (VKTS, VTKTNS, VKS, IKTS, IKTNS);

the switching system modules AB and CD;

the memories of the modules ZU-AB and ZU-CD;

the markers M, the decoders P, the waiting equipment AO;

TR, VSR, SR, ISR registers and RI stages;

order-circuit ATS.

In addition, the UAK equipment includes monitoring and testing equipment KIA, load computing equipment AUN and quality control equipment AKK and also the equipment of the generators and signal-ringing sets. For interaction of the control units with the KIA, register and test adapters are used.

Let us consider the operation of the UAK devices when setting up calls.

Setting Up a Tandem Call via the UAK. When the incoming system is busy with respect to the channel from the preceding office, the corresponding register is connected to it via the RI stage. The information coming from the preceding office by request of the connecting register is stored in it. After storing the required number of digits the register calls the decoder. On the basis of this call, the marker of the switching system selects the calling register which on a signal from the marker via the register switch RSP is connected to the decoder in order to transmit the required information to the latter (category, first five digits of the stored number, and so on). On the basis of this information the decoder outputs the mark to the outgoing systems of the required routing, and the marker of the switching system uses the ZU-AB and the ZU-CD to determine the connecting path. Information about the path selected by the marker is recorded in the ZU of the modules AB and CD. After selecting the path, on the basis of the "path selected" signal received from the marker, the decoder transmits information to the register about its method of operation in the further phase of setting up the call, and the decoder and marker of the switching system are released. Simultaneously, the ZU begins to control the operation of the MKS of the switching system. After connecting the path via the switching system to the outgoing system, the ZU of the modules are released.

When the outgoing system is busy, a channel is busied to the next office, and the register transmits the stored information to it (on request from the register of the next office), and then it releases. During the call, only the incoming and outgoing sets participating in the connections and the connecting path between them via the switching system remains busy at the UAK. After completion of the call, the systems and connecting path are released successively, beginning with the incoming set.

Setting Up a Call with Waiting. When the decoder detects the absence of free paths (direct and bypass), the call is set up for waiting. For this purpose the decoder jointly with the marker creates a connection via the switching system by the usual method except that instead of the input of the outgoing system the path is connected to the input of the waiting line AO and information is transmitted to the register from the decoder but the call has been put on hold. During waiting the incoming system is busy at the UAK, the path through the RI stage, the register, the path through the switching system and one of the inputs (waiting lines) of the AO are busy. In the AO equipment which is constantly connected to the decoder, the required information is available about the waiting calls (their categories and routing numbers).

At the time of release of the channel on the awaited routing, the AO transmits a signal via the waiting line and switching system to the waiting register that it must again call the decoder. If more than one register is waiting for the release of of a routing, then the registers with priority calls are serviced first.

The register, receiving the signal, again calls the decoder, breaks the connection via the switching system to the waiting line and is connected to the decoder. From the time of connection of the waiting register to the decoder (using the marker of the switching system and the register switch RSP) the further setting up of the call is analogous to ordinary calling via the UAK (without waiting).

Communications with the Order-Circuit ATS. An outgoing call to subscribers of the order-circuit ATS of other UAK and AMTS is set up via the VKS equipment and the switching stage of the UAK using the SR register over the ordinary long-distance channels. The interaction of the switching system devices, the RI stage and the line equipment takes place just as when setting up a tandem call.

The outgoing calls from other UAK and AMTS to the subscribers of the order-circuit ATS of the given UAK pass through the switching system and a special RSLV which is part of the order-circuit ATS which is connected to the outgoing line bank of the switching system of the UAK.

Calls are also set up via the order-circuit ATS to the KIA-2 during remote measurements and testing of channels and line equipment. For this purpose, a special GI-KIA stage is provided in the order-circuit ATS.

5.9. Calculation of UAK Equipment

The data from the master plan for development of the long-distance telephone network for the same period as the given UAK is designed are used as the initial data for calculating the UAK equipment. The class of UAK (UAK-I or UAK-II) and its capacity are established by the master plan data. The number of long-distance channels and the load on each routing are determined by the same data.

For calculation of the number of line systems of each variety, information is also needed on the type of equipment on opposite ends of the channels. Couplings to like equipment (AMTS-4, UAK, ARM-20) are organized over the single-frequency signal system channels with the application of the line equipment IKTNS, VKTNS.

The data on the average busy time of the instruments when setting up calls and the service quality index norms required to calculate the number of instruments are identical to those used for the AMTS-4.

In connection with the fact that the switching and control units and also the register equipment are standardized with the AMTS-4, the method of calculating them is identical to that for the AMTS-4, and therefore it will not be presented here. The assembly of the UAK racks, structural design and peculiarities of their placement are identical to the corresponding equipment for the AMTS-4.

5.10. Structural Features of AMTS-4 and UAK Equipment. Placement Principles

The rack equipment of the AMTS-4 and UAK, in contrast to the types of AMTS equipment existing up to now is made of hollow steel tubes, the structural design of which permits installation of 10 . replaceable rotary boards in the rack. The boards are connected to the rack cable by connectors. As a result of the fact that the racks are rotated on the front side, the racks can be installed in double rows with the installation sides tight against each other. On the face panel in the upper part of the rack are the main rack fuses, signal lights and plugs for connecting the office cables. The rack has doors on the front.

When equipment is put in the switchroom all of the basic racks are installed in parallel double bays with the exception of the order-circuit ATS, the racks of which are placed in single bays. The depth of a double bay is 600 mm, and the width of the basic equipment racks with respect to the face is 1050 mm.

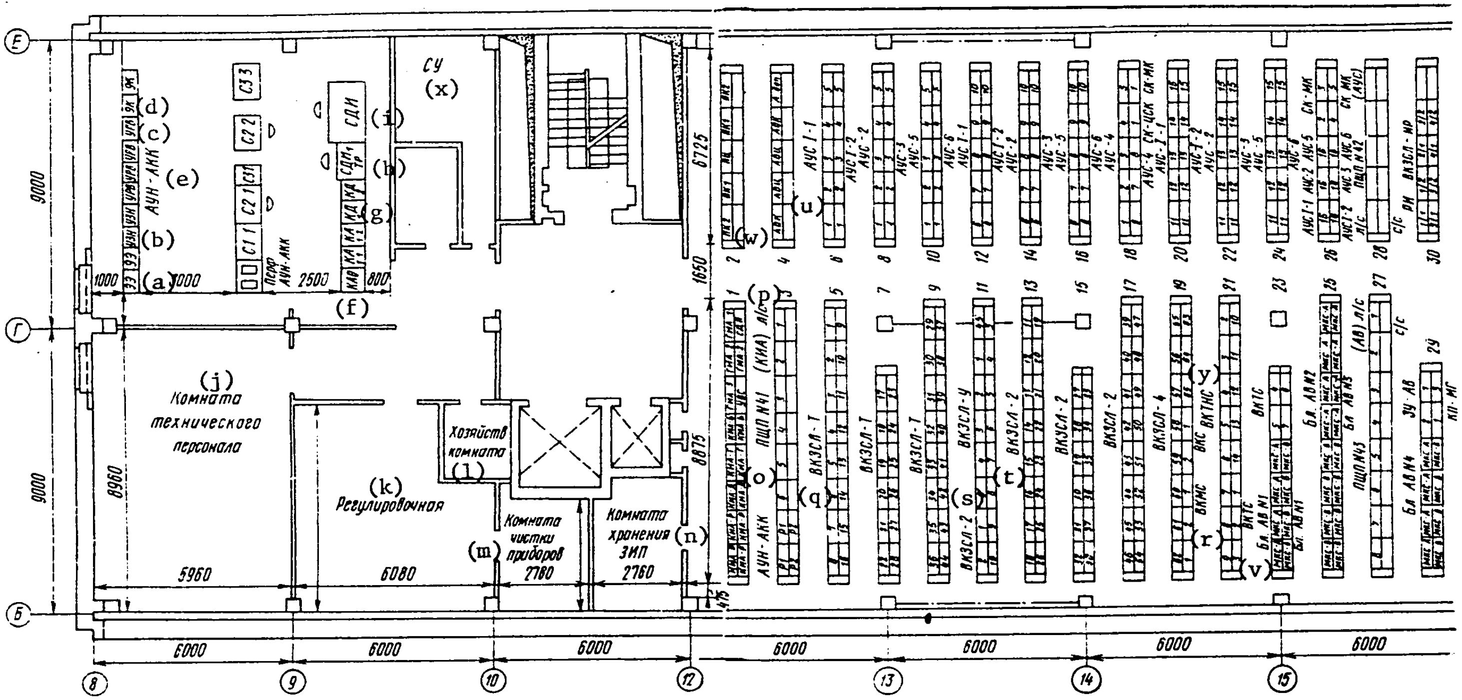

Figure 5.11. Part of the layout of equipment in the switch room of the AMTS-4.

Key:
a. EE
b. UZN
c. URV
d. EK
e. AUN-AKK
f. KAR
g. KD
h. SDI_1 TR
i. SDI
j. maintenance personnel room
k. adjustment room
l. service room
m. instrument cleaning room
n. ZIP storage room
o. KIA
p. PShP N41 (KIA) ℓ/s
q. VKZSL-T
r.
s. VKZSL-U
t. VKZSL-2
u. AUS ...
v. UVS
w. PK...
x. SU

The bay signal units are designed for setting up bays of 10 × 2 racks in a bay. They are put in special entrance cabinets 225 mm wide installed at the ends of each bay. The distance between bays (on the face side) must be no less than 800 mm inasmuch as the rack boards are rotary and it is necessary to provide for rotation of the board by no less than 90°.

General office signal units permit installation of up to 80 double bays in the switch room.

The metal structural elements for laying cables consist of bay and long-line cable channels. In addition, for cases where the bay is broken by a column, special structures are provided to close the ends of the broken bay.

The intermediate switch panels have a design permitting them to be installed as a continuation of the bays.

The work places of the technical personnel (STK, SDI, and so on) must be set up in the technical monitoring and servicing facility which is located beside the switch room. A part of an example layout of equipment in the switch room of the AMTS-4 is presented in Figure 5.11.

5.11. Electric Power Supply for the AMTS-4 and UAK

To power the equipment of the AMTS-4 and UAK, -60 volt, -24 volt dc power supplies, and the municipal ac electric power network are used. Voltages of -20 volts and +6 volts required to power the transistor circuits are developed using voltage converters fed from the primary -60 volts. The converters are located on the rack signal board. One converter can power several racks.

CHAPTER 6. ARM-20 TYPE AMTS DESIGN

6.1. General Information

The crossbar AMTS with relay control type ARM-20 of Swedish-Yugoslavian production has found application on the long-distance telephone network. For delivery to the Soviet Union, the equipment of these offices has been modified in accordance with the operating-technical requirements presented by the USSR Ministry of Communications. The content of the operating-technical requirements was made as close as possible to the analogous requirements on the AMTS-4.

6.2. Operating Capabilities of the Office

The equipment of the ARM-20 type AMTS is designed to service both terminal and tandem traffic and is used for installation in large cities of the country. For switching the talk channel, one common switching system is used, the switching banks of which (incoming and outgoing) include long-distance and intrazonal network channels, GATS communication lines and all other lines for different purposes. One office permits connection of up to 4000 incoming and 4000 outgoing lines and channels. The layout offers the possibility of joint (paired) operation of two such offices in one building, which permits the maximum capacity of the office to be increased to almost 8000 incoming and 8000 outgoing lines and channels.

The number of outgoing routings which can be connected to an office can reach 160, including up to 110 long-distance routings. The maximum capacity of a group of channels on each routing can reach 450.

MKS are used as the automatic switching devices, and control realized by a common group of relay markers. The maximum carrying capacity of the common control units of one office is 70,000 calls in the PLH [peak load hour], which corresponds to a total load on the switching system of no more than 2600 erlangs.

For semiautomatic calls over the long-distance channels, the office contains matching devices that permit use of the MRU type long-distance switchboards.

The line equipment of the ARM-20 type AMTS is specially adapted for interaction with the equipment available and installed on the network of our country. For the long-distance channels, line equipment is provided with single-frequency line signaling (on a frequency of 2600 hertz) and equipment with two-frequency signaling (on frequencies of 1200 and 1600 hertz). Using the corresponding line equipment, provision is made for interaction with crossbar and ten-step ATS of the city and rural telephone networks both in the presence of AON equipment and when it is temporarily unavailable.

The office has special units which offer the possibility of priority servicing of subscribers of individual categories under the condition that these subscribers are connected to the ATS equipped with AON equipment. During the process of setting up a call, the priority subscribers have the right to priority servicing if the required routing is overloaded.

For automatic charge computing for calls on automatic long-distance and intrazonal service the office has some special equipment. The data for settlement with the subscribers are recorded on punchcards.

The order-circuit service is organized using a crossbar agency's order-circuit ATS of the Swedish built ARK-522 type.

The automatic monitoring and testing equipment offers the possibility of technical servicing of the office by the monitoring and correcting method.

6.3. Structural Diagram

Figure 6.1 shows the structural diagram of the ARM-20 type office. The names of the devices and their abreviated notation correspond to the technical forms produced by the company delivering the equipment. As is obvious from the diagram, the office contains the following devices:

the line equipment of the long-distance channels of a single-frequency signal system incoming FIR-T-Y and and outgoing FUR-T-Y;

the line equipment of the long-distance channels of a two-frequency signal system incoming FIR-2T-Y and outgoing FUR-2T-Y;

line equipment of physical two-wire lines for ZSL FIR-ZL-H and SLM FUR-L-H;

line equipment of the transmission system channels with segregated signal channel for ZSL FIR-ZT-H and SLM FUR-T-H;

line equipment for the transmission system channels without segregated signal channel for the ZSL FIR-ZT-N and SLM FUR-T-N;

line equipment for communications with the long-distance switchboards of the MRU type -- incoming from the MK FIR-L-0, outgoing to the MK FUR-L-0;

line equipment for the recorded voice unit FUR-S and the automatic answering device KIA FUR-P;

switching modules, incoming GI(GIA-GIB), outgoing (GU(GUA-GUB);

register finding stages RS;

registers REG-H/N, REG-Y/0, REG-2T;

code receivers KM-D, KM-V;

code transmitters KS-D; KS-K; KS-V;

connectors SS;

register analyzer AN;

automatic charge computing equipment TT;

connector for connecting registers to markers RM;

basic marker M;

route marker (decoder) VM:

connectors of the modules incoming MGI, outgoing MGU;

blocking device GGD;

call distributor RK/M;

test modules TB;

free routing marking relay VL;

priority unit PE;

device for requesting and receiving information from the AON (UZPR) A-NR;

the ARK-522 order circuit which includes the relay systems for coupling the incoming FIR-SE and the outgoing FUR-SE to the AMTS.

As is illustrated in the diagram, the incoming FIR line systems are connected to the switching bank of the GIA link, and the outgoing line systems, to the GUA link bank.

The H/N registers service the outgoing calls and are connected through the RS stage to the ZSL equipment and the incoming equipment from the order-circuit ATS. The automatic charge computing system TT is also connected to the ZSL equipment. The H/N registers are connected to the AN analyzers, the decade pulse receivers KM-D and the UZPI A-NR and also to the transmitters KS-D, KS-K and KS-V.

The Y/O register services the terminal and tandem calls over the long-distance channels of the single-frequency signal system and are connected to the incoming equipment of the channels of the single-frequency signal system FIR-T-Y and also to the incoming line systems from the long-distance MRU switchboards. At the switchboard positions of the MK MRU for joint operation with the ARM-20, a key pulser is installed which provides for transmitting the number information by audio-frequency currents ("2 out of 5" code). The Y/O registers are connected to the AN analyzers, the multifrequency code receivers KM-V and the KS-D and KS-V transmitters.

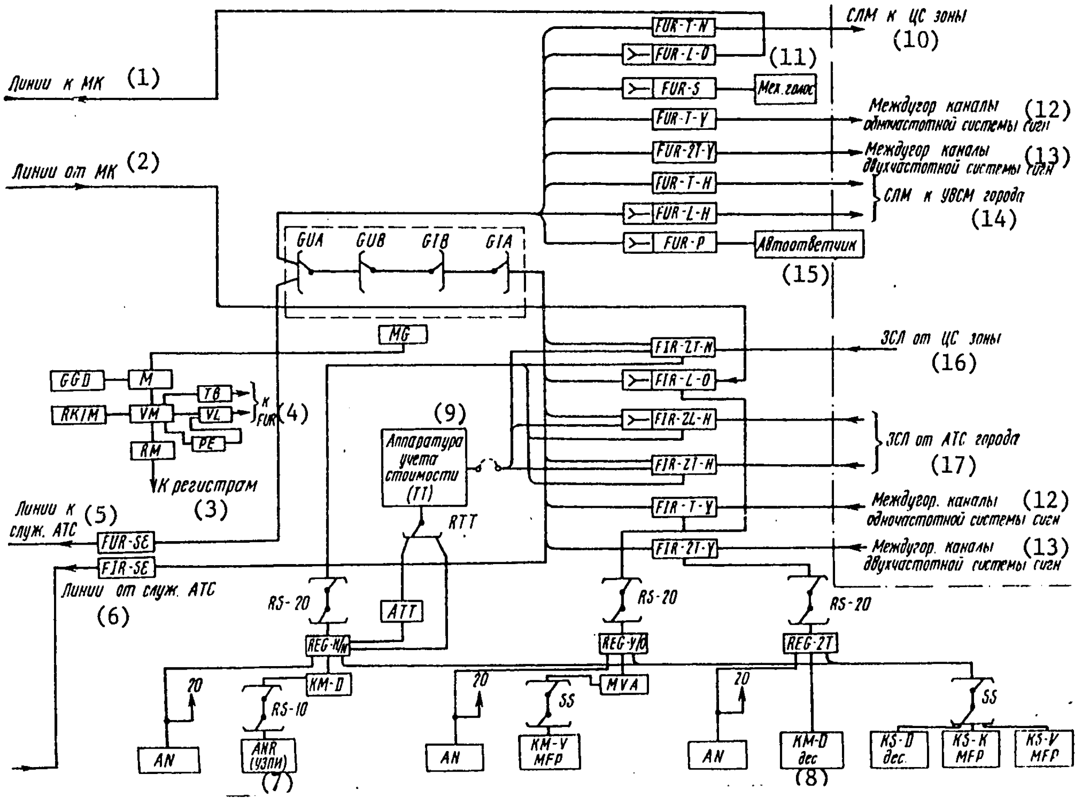

Figure 6.1.

Key:
1. lines to the MK
2. lines from the MK
3. to the registers
4. to the FUR
5. lines to the order-circuit ATS
6. lines from the order-circuit ATS
7. (UZPI)
8. des.
9. charge computing equipment
10. SLM to the zone central office
11. recorded voice
12. long-distance channels of the single-frequency signal system
13. long-distance channels of the two-frequency signal system
14. SLM to the city UVSM
15. automatic answering device
16. ZSL from the zone central office
17. ZSL from the city ATS

The 2T registers service calls over the long-distance channels of the two-frequency signal system and are connected through the RS to the incoming FIR-2D-Y systems. The 2T registers are connected to the AN analyzers, the decade pulse receivers KM-D and transmitters KS-D, KS-K and KS-V.

The outgoing systems connected to the GUA links (except the SLM) are connected to the test blocks TB and the routing release relay VL. For access to the SLM, the office layout provides the possibility of connecting both through the four-links of the switching system and through two links.

When setting up calls via the two links, the line equipment of the SLM is connected to the vertical of the link B of the incoming module. The Soviet-made switching stages IGIM and DGIM can be installed in the SLM channel. Accordingly, the number of outgoing modules of the ARM-20 office decreases. However, the total number of SLM increases significantly, for each incoming module has its own group of lines running out of it.

The choice of the version of inclusion of the SLM (via 2 or 4 links) can be made under specific conditions on the basis of a technical-economic analysis.

Two ARM-20 offices can be joined to each other as shown in Figure 6.2. Here the following devices are added: the device for connecting the routing marker of office A to the routing marker of office B (VM-VM) and the relay equipment of the intra-office connecting line between interacting offices FAB. The connection is made through two links of the incoming module of the office A and through four links of office B or in the opposite direction, via two links of office B and four links of office A. The usual connection through four links with paired operation of the offices can also occur at any of the offices.

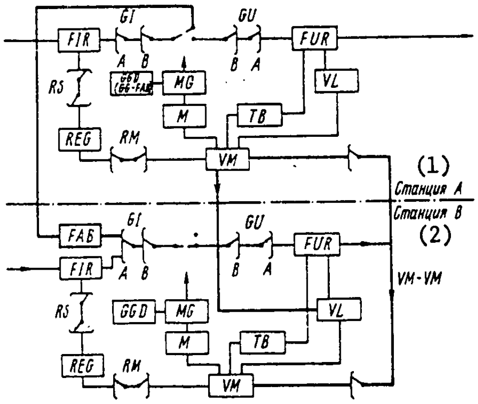

Figure 6.2. Diagram of paired operation of two offices.

Key: 1. office A
2. office B

The groups of lines (channels) of the outgoing routings usually are shared between offices. However, individual routings can be connected completely to one office.

The line and control signal systems of the ARM-20 type AMTS are analogous to those which are adopted for the AMTS-4.

6.4. Setting Up Calls

Outgoing Call Via Four Switching Links (see Figure 6.1). When the incoming line equipment FIR is busy, the register finding stage RS is called. Finding a free register, the RS busies it and connects the wires from the FIR to this register. In the register the wires are connected through to the KM digit code receiver. After reception of a defined number of digits of the called subscriber's (B) number required to determine the routing, the AN analyzer register is called which reads these digits, and transmits the information indicating after which received digit the route marker VM must be called to the register. After the register receives the required information the AN is released.

The register calls the free routing marker VM via the RM connector and connects to it. Using the call distributor RK/M, the next VM connection is made. By the signal from the FIR, the routing marker delays the incoming module number. The register transmits digits to the VM to determine the routing and information about the category of the calling subscriber (A). The routing marker calls a free test block TB which is connected to the unit for determining the presence of a free line on the required routing VL. After connection to the TB a test is run, and a free outgoing line (channel) FUR is selected.

The routing marker calls the free marker M and connects to it. Information about the number of the incoming module is transmitted to the marker from the VM, and from the TB, information is transmitted about the number of the outgoing module in which the incoming and outgoing lines can be selected. Then M calls the common blocking units for these modules GGD in order to discover whether any other marker is setting up a call in one of the given switching modules. After a check indicating that no other calls are being set up in the indicated modules, the marker M receives access to the switching modules via the connectors of the MG modules which connect the test and control lines between the markers and the switching modules. The marker M defines a free switching channel between the incoming and outgoing lines, establishes a connection via four links and transmits the signal of completion of setting up the call to the register.

The register releases the marker M which becomes ready to service new calls. Then the register sends the digits and signals required to set up the call to subscriber B to the outgoing line (channel). This information is output using the code transmitter KS connected to the register via the connector SS. On completion of output of the information the register is released. During the call,only the line equipment and the switching elements of the four links of the switching modules remain busy. After completion of the call the equipment and modules are released.

If all the outgoing lines on the required routing are busy, the type of servicing of the call is determined by information on the category of subscriber A. For subscribers of individual categories serviced with priority, the incoming call is put on hold by means of the PE equipment. For the remaining subscribers the call is rejected.

All of the data on the completed call go to the automatic charge computing equipment TT, they are processed there and output in the form of a punch card by means of which the sum of money to be paid by subscriber A is reckoned at the computer center.

Outgoing Call via Two Switching Links. When accessing routings of very high capacity, for example, when connecting to a paired office or for incoming connection to the local telephone networks of its zone, the call can be set up via two switching links instead of four. In this case only the incoming modules participate in setting up the call, and the outgoing line systems are connected to these modules on the intermodule line side, that is, to the GIB link.

When the FIR is busy, a free register is busied via the RS. The wires are connected to the code receiver in this register. After the register receives the required information, it connects to a free routing marker and transmits the routing digits to it. In the routing marker a relay responds which is used to connect via two switching links. The circuits for testing and selecting a free marker M to which the VM is connected, are created via the contacts of this relay. In the marker M, one of five routing marker relays connected via the two links (there can be no more than five such routings) responds. Determination of the incoming module and calling the locking unit GGD for the given incoming module take place almost simultaneously. After a check indicating that no other calls have been set up in the given module, the starting relay responds. The marker M is connected to the incoming side of the given switching module. Then the test circuits are connected to the test relays of the outgoing systems FUR connected to the link GIB on the intermodule line side. The marker uses the test circuits to find a free switching channel between the incoming and outgoing line systems, connects this channel through and transmits the signal setting up the call between the FIR and the FUR to the register. The register releases the marker and sends the digits and signals for setting up the call to subscriber B to the outgoing line. After output of the information, the register is released, and on completion of the call, the line equipment and switching module are released.

Incoming Automatic Connection. In the case of an incoming automatic connection the call arrives at the incoming system of the long-distance channel FIR-T-Y or FIR-2T-Y. The RS is connected to the incoming equipment and busies the free register REG-Y/0 or REG-2T. Then the call is set up just as for an outgoing call except that the called office is the local network ATS.

Tandem Automatic Connection. In the case of a tandem connection, the call arrives at the incoming system of the long-distance channel, the register finder RS is connected to it which finds and busies a corresponding free register. Then the process of setting up the call is analogous to an outgoing call. The outgoing systems of the long-distance channels FUR-T-Y or FUR-2T-Y are connected, and the automatic charge computing equipment TT does not participate.

Outgoing Call from a Long-Distance Switchboard. When it is necessary to set up a call from the long-distance switchboard, the telephone operator inserts a plug in the long-distance channel jack and dials the number by means of a key pulser via the matching equipment, FIR-L-O. The call is then set up just as for an outgoing call, but without participation of the TT equipment.

Incoming Call to a Long-Distance Switchboard. A call addressed to the MK operator comes to the incoming equipment of the long-distance channel to which the stage RS is connected and busies a free register. The further process of setting up the call is analogous to an incoming terminal call except that when dialing a defined number by means of the outgoing matching system FUR-L-0, a connection is made to the switchboard.

6.5. Paired Operation of Two Offices (see Figure 6.2)

Let us assume that a call arrives at office A. The first step in setting up the call is the same as described above: busying the FIR, through connection via the RS, busying a register, reception of the digits, calling the routing marker, through connection via the RM, transmission of the digits from the register to the VM, marking the incoming module from the FIR to the VM and transmission of digital information from the KS to a special relay in the VM. If all the lines of the required routing are connected to office B, then the marking relay AI designed for paired operation responds in the routing marker of office A. Accordingly, the routing marker of office B is called without testing the routing at office A.

Let us consider the case where the lines of the outgoing routing are distributed between two offices, and a call comes from the direction of office A, but the free outgoing equipment exists only at office B. After storing the digits in the routing marker, a special test relay responds in both offices. Using the marking relay AI of office A, free routing markers at office B are called. On completion of the calling of one of them via the VM-VM connector, the call is set up between the routing markers of the two offices. In the routing marker of office A, a marking relay responds to set up the call via two switching links. After selecting the marker M and connecting it to the routing marker, a special marker of the routing connected via the two switching links responds in the routing marker. This relay is used only when setting up a call via a paired office.

Information about the number of the incoming module in which the given FIR is located is transmitted to the marker M from the VM, and the GGD for the given incoming module is called via the contacts of the GG-FAB system which is part of the blocking unit GGD. The relay system GG-FAB prevents mutual blocking of the paired offices on counter connection of them when the GGD is busy, and it offers the possibility of setting up a call on only one routing at a given point in time. On completion of the check indicating that no other calls are being set up in the indicated incoming module, the marker M is connected to the incoming side of this module. Then the test circuits of the switching system are connected to the test relay in the FAB.

After setting up the call in the links GIA-GIB at office A, in the FIR system the busying relay responds on the routing GIA and the relay sends a plus via its contacts through the register finding stage RS, the register and routing marker to the marker M. In the marker the completion of finding relay responds, but the signal of completion of setting up the call is not transmitted to the register, and the marker remains connected. In the FAB, the busying relay from the GIB of office A responds. The device VM-VM transmits information about the number of the incoming module to the routing marker of office B via the contacts of the aforementioned relay over wires a and b, via the switching links in the office A, FIR, RS, REG, RM, and VM of office A. Then the digits are transmitted from the register of office A via the VM-VM unit to the routing marker of office B to the digit code receiver relay. Then, just as when connecting via four switch-links, the routing is marked at office B, the routing is tested, the test module is selected and connected, connection is made to the required routing, and a free line on the routing is tested and selected.

On completion of testing free lines of the required routing connected at office B, the lines connected to office A are not tested. This is achieved by means of the AK-REG system which belongs to the routing marker. Simultaneously with connection of the test block TB to the routing marker, the marker M is selected, it is connected to the routing marker. Information about the numbers of the incoming and outgoing switching modules is recorded on marker M. Then the common blocking units GGD for these modules are called. After testing by the GGD unit, the starting relay responds in the marker M of office B. The relay feeds a minus to the relay which is secondary for the starting relay in marker M of office A. This relay responds, sending a minus to the test relay in the FAB equipment. Then the basic test is made and the switching channel is selected.

On completion of setting up a call via station B from the FUR via the FAB equipment and the switching module FIR, RS, REG and RM, the completion of finding relay response circuit is created in the marker M of office A. Then the finding completion relay responds in the register of office A via the unit VM-VM and the routing marker of office A, which leads to disconnection of VM and M at both offices. After output of all information, the register is released, and only the FIR, FUR, FAB and switching modules remain busy during the call.

6.6. Brief Description of Office Equipment

Switching System. The switching system consists of symmetrically arranged two-link modules which are connected to each other by intermodular lines. Three-position crossbar connectors MKS10×20×5 are used as the switching devices. These connectors provide four-wire switching of the talk channel. The incoming or outgoing lines are connected to the links GIA (GUA), and the links GIB (GUB) are connected by the intermodular lines.

The capacity of a two-link module on the switching bank side is 200 points, the number of intermediate lines between links A and B is 200, and the number of intermodular lines can be 200, 300 or 400. Thus, modules of the 200-200-200, 200-200-300 and 200-200-400 type can be used.

The group formation system of the 200-200-400 module is shown in Figure 6.3. The links GIA and GUA have 200 verticals (two racks). In each of the racks there are ten MKS forming five switchboards (two MKS in each). Each switchboard has 20 verticals and 20 bank lines. Thus, 100 verticals and 100 bank lines are formed in one rack, and 200 verticals and 200 bank lines, respectively, in two racks.

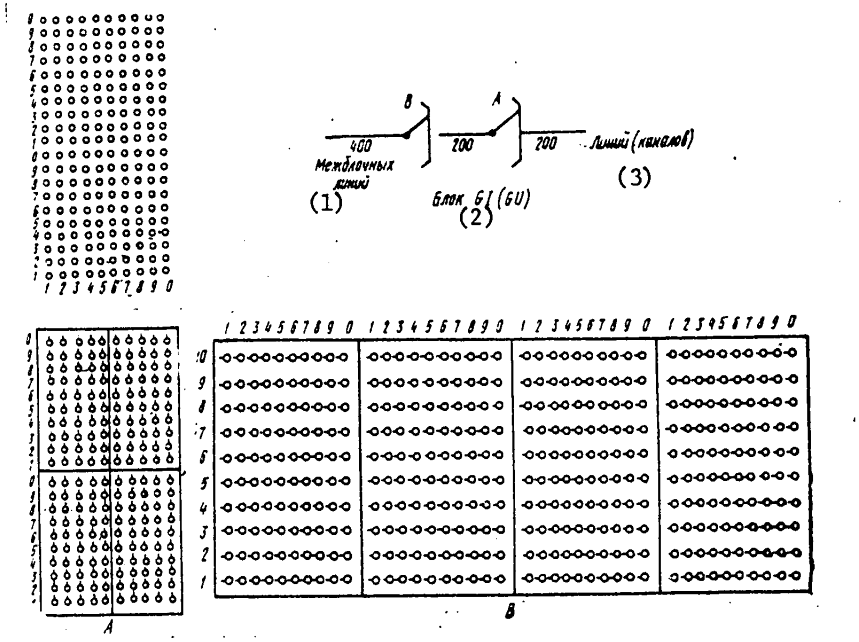

Figure 6.3. Group formation diagram of the 200-200-400 module

Key:
1. Intermodular lines
2. Module GI(GU)
3. Lines (channels)

The GIB and GUB links contain 200, 300 or 400 verticals (two, three, four racks), depending on the load and the required number of intermodular lines. Instead of a set of intermodular lines in the vertical of link GIB, relay systems of the incoming lines can be connected to the local telephone networks (with the version of setting up calls via two switching links). In link GIB, up to five routings of such lines are provided. One of them is usually reserved for paired operation with a possible second office.

Line Equipment

The one-way or two-way lines can be connected to a line bank with respect to the two-wire or four-wire system. The relay systems connected to two-wire lines contain a differential system permitting conversion to a four-wire switching system for the talk wires (in Figure 6.1 these systems have additional notation in the form of the provisional symbol for the differential system along with the identification codes for the set).

The ZSL incoming systems and the SLM outgoing systems are matched according to the layout with the crossbar and ten-step ATS on our network.

Register Finding Stage

The register finding stage RS is used to connect the line equipment to the registers and the registers H/N to the UZPI (ANR).

The RS stage is a crossbar module for 16 inputs and 20 outputs. There are two versions of these modules with respect to the number of switched wires: the 20-wire RS-20 and the 10-wire RS-10. The RS-20 module is made up of two MKS and is used for connecting line equipment to the registers. Each type of register is connected to the systems via an individual register finding stage. The module RS-10 consists of one MKS and is used to connect the code receivers KM to the receiving part of the AON -- the device for requesting and receiving information of the UZPI located at the AMTS. The group formation system of the RS-10 and RS-20 modules is shown in Figure 6.4. For controlling the stage RS, the marker RSM is used which recognizes the calling equipment, for example, the line system, establishes the presence of free registers and selects one of them.

For paired operation of two offices, the register finding stage includes an additional unit RSM-S which makes it possible to use two additional signal wires providing for interaction of these offices.

The RS-10 stage contains two versions of the markers: RSM 128/20/10 for connecting 128 inputs to 20 outputs and RSM 64/20/10 for connecting 64 inputs to 20 outputs. For the stage RS-20, the marker RSM 64/20/20 designed for connecting 64 inputs to 20 outputs is used.

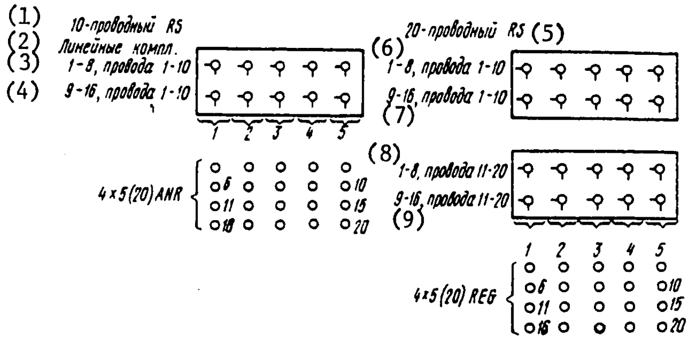

Figure 6.4. Group formation system of the RS-10 and RS-20 modules

Key:

1. 10-wire RS
2. Line equipment
3. 1-8, wires 1-10
4. 9-16, wires 1-10
5. 20-wire RS
6. 1-8, wires 1-10
7. 9-16, wires 1-10
8. 1-8, wires 11-20
9. 9-16, wires 11-20

The presence of these versions of the markers is connected with universality of the makeup of the RS racks. Eight MKS, the markers RSM and additional systems RSM-S for paired operation are placed in one rack RS. For the module RS-10, eight MKS permit connection of 16·8=128 inputs, and for the module RS-20, 16·4=64 inputs, respectively. Beginning with this fact, when using the RS-10 the rack can have either one marker RSM 128/20/10 or two markers RSM 64/20/10, and when using the RS-20, one marker RSM 64/20/20.

The RSM-S systems are designed to service 64 relay systems; therefore two such systems are placed in the rack.

Register Connector SS

The register connector SS is an MKS module with capacity of 16 inputs and 40 outputs which is controlled by the marker SSM. The connector can be of two types, depending on the number of switched wires: 10 and 20-wire. The group forming system of the connector SS is shown in Figure 6.5.

Registers are connected to the connector inputs. The connector outputs can be used for connection to three types of devices. In particular, the register connector is used to connect registers to any of the three types of code transmitters (see version d in Figure 6.5).

A completely equipped connector services 16 registers which are divided into two identical groups and are connected to two (SSV III, IV) or four (SSV I, II, III, IV) MKS, depending on the number of wires at the switching point. The calling register group and type of required unit are noted in the marker. Each group of registers can be connected to ten intermediate lines or verticals (V).

The connector SS is also used to connect the matching part of the code receiver KM-V (board MVA) to its remaining elements. In this case, only one type of unit is connected to the outputs of the connector. With more than 40 KM-V, fully accessible connection is used (see version a in Figure 6.5).

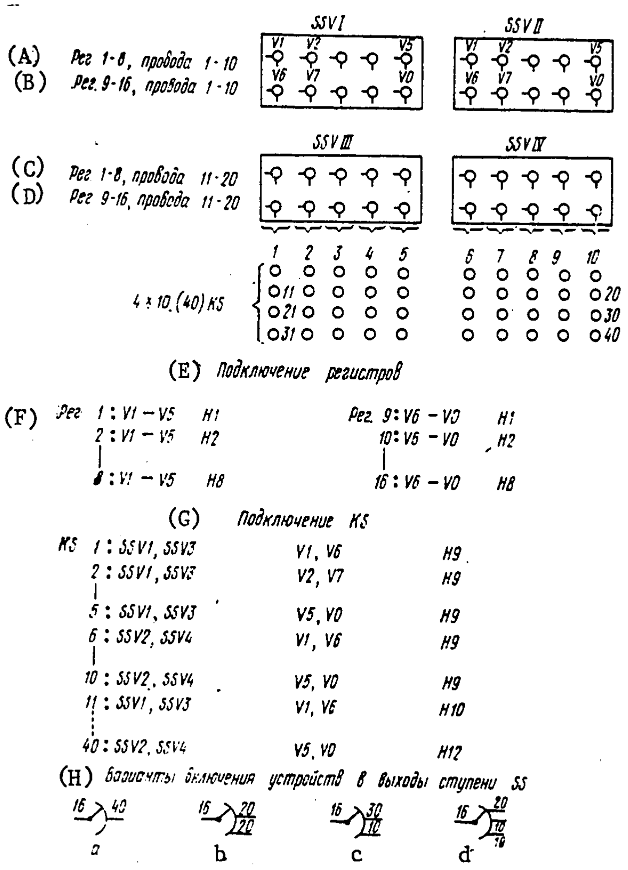

Figure 6.5. Group formation system of the connector SS

Key:

A. Registers 1-8, wires 1-10
B. Registers 9-16, wires 1-10
C. Registers 1-8, wires 11-20
D. Registers 9-16, wires 11-20
E. Connection of registers
F. Registers
G. Connection of KS
H. Versions of connecting the units to the outputs of the SS stage

Register Equipment System

The register system contains four types of devices: the code receivers KM, the code transmitters KS, the code analyzers AN-S and registers REG. The register is the main unit of this system and is used to record and store the information required to set up calls. The office contains three types of registers: REG-H/N, REG-Y/O and REG-2T. Figure 6.6 shows the structural diagram of a register equipment system.

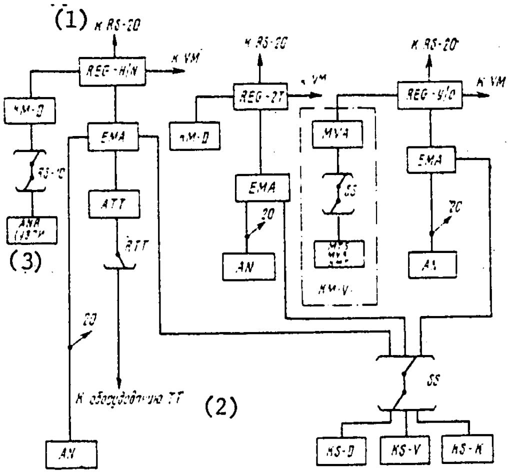

Figure 6.6. Structural diagram of register equipment system

Key:

1. to the RS-20
2. to the TT equipment
3. ANR (UZPI)

The register H/N is connected to the incoming systems ZSL and lines from the order-circuit ATS for servicing automatic calls. For reception of information, the code receiver KM-D is connected to the register.

The register Y/O is connected to the incoming systems of the long-distance channels of the single-frequency signal system and the lines from the long-distance switchboards for servicing automatic and semiautomatic calls. A key pulser is installed on the long-distance switchboards for this purpose. The information is received by means of the code receiver KM-V connected to the register.

The register 2T is connected to the incoming systems of the long-distance channels of the two-frequency signal system and is designed to service automatic and semiautomatic calls over these channels. The code receiver KM-D is connected to the register to receive information.

All three types of registers can output information by any of the three methods adopted at the office, by connection via a connector SS to the required type of code transmitter.

The code receivers KM are used to receive digital information transmitted by a defined method. The office contains two types of code receivers: KM-D and KM-V.

The receiver KM-D receives decade pulses which can come from the direction of: the ZSL, the incoming long-distance channels of the two-frequency signal system and the order-circuit ATS. The receiver converts the decade pulses to positive pulses by the "two out of five" principle and relays the information to the register.

The receiver KM-V receives information by the multifrequency method by a "two out of six" code by the "pulse packet" method from the long-distance channels of the single-frequency signal system and from the key pulses of the long-distance switchboards. Then it converts the frequency signals to positive pulses and relays the information to the register.

The code transmitters KS are designed to transmit information by a defined procedure. The office has three types of code transmitters: KS-D, KS-K and KS-V.

The transmitters KS-D are used to output information by the decade method on the routing to the ten-step ATS: when setting up an ordinary call -- to subscriber B -- and a monitor call -- to subscriber A. The monitor call is set up at the outgoing AMTS if the ATS to which the subscriber A is connected does not have AON equipment. The KS-D transmitters are used to output information by the decade method also over the long-distance channels of the two-frequency signal system.

The KS-K transmitters are used to output information in the multi-frequency "2 out of 6" code by the "pulse shuttle" method on a routing to a crossbar ATS (when setting up ordinary and monitor calls).

The KS-V transmitters are designed to output information over the long-distance channels of the single-frequency signal system by the multi-frequency "2 out of 6" code using the "pulse packet" method.

The AN-S analyzer is used to process information coming from the register. Each analyzer is calculated to process information from 20 registers. Each register can be connected to only one analyzer. The analyzer offers the possibility of limiting the access to individual automatic communications routings if required.

If it is necessary to record the number of subscriber B which contains more than eight digits, an auxiliary eight-digit memory element EMA can be connected to each register.

The H/N register equipment has additional devices ATT and ANR (UZPI), which is connected with the special operating conditions of the H/N register. The ATT system is the storage element for the number of the calling subscriber connected to the equipment for automatic charge computing TT.

The operation of the H/N register system in the presence of AON equipment at the ATS proceeds as follows. When a call arrives from a subscriber connected to the ATS with AON, the corresponding mark is transmitted to the register from the incoming ZSL equipment. The UZPI device designed to receive the category and number of the calling subscriber from the AON is connected to the receiver KM-D via the RS. The UZPI device sends an "AON request" line signal in the direction of the ATS, and then a 500 hertz signal if required. The information from the AON comes to the UZPI by multi-frequency "2 out of 6" code by the "no-interval packet" method, and it is converted to plus pulses by the "2 out of 5" code. Then the signal about the category of subscriber A is sent to the register and the subscriber A category storage element, and the entire number of subscriber A is transmitted digit-by-digit to the storage element ATT. After output of all of the information the UZPI is released. Subscriber A receives a buzzing response from the AMTS and proceeds with dialing the number. The first eight digits of the number of subscriber B are recorded in the storage element for number B, eight digits in the REG-H/N register, and the rest in the EMA.

In the absence of AON equipment, the H/N register system operates by the method where the subscriber dials his own number. In this case when the call comes in from the subscriber connected to the ATS without AON, a flag noting the absence of the AON is set in the register from the incoming ZSL equipment. The subscriber A receives the buzzing response of the AMTS. The subscriber dials the number of subscriber B, and then his own number. The information that number B has been completely received is stored in the register and transmitted to the KM-D. Receiving this information, the KM-D sends the next digit to the ATT. After receiving the entire number of subscriber A, a monitor call is set up in his direction.

When a signal arrives that the line of subscriber A is busy, the monitor frequency 1700 hertz is switched on at the AMTS, which is sent over the trunk to the ATS. If the call is set up to the required subscriber, the 1700-hertz frequency must be received at the KM-D. Information about the test result is transmitted to a register which begins to set up the call with subscriber B if the information is positive. When operating by the system where the subscriber dials his own number, the category of subscriber A is created in the register itself.

The interaction of the REG-H/N with the automatic charge computing equipment TT is realized using the relay system ATT located on the H/N register board. From the incoming ZSL equipment (FIR) a mark is transmitted to the ATT which indicates to which group of 100 FIR the calling set belongs. The number of subscriber A is transmitted to the ATT. Interaction with the TT equipment begins after the register informs the FIR that it is possible to call the TT equipment. The call is sent from the FIR to the TT equipment, and, in turn, the TT transmits information via the FIR to the register that the TT equipment is free, after which the wires between the register and the TT are connected through or the TT equipment is busy, after which the connection is made without computing the charge or there is a disconnect.

Information about the number and category of subscriber A, the number of subscriber B and also whether the subscriber B line is busy or not or the category mark is transmitted from the register to the TT equipment. The indicated information is transmitted in four or five steps depending on the number of digits in the number B.

Automatic Call Charge Computing Equipment TT

The TT equipment (Figure 6.7) is made up of groups that service 100 of the ZSL systems each. The calls coming over the ZSL are received and recognized by the identifier servicing the given hundred group of line equipment. The ordinary call requires three categories of references to the TT equipment. Accordingly, each of these categories has its own identifier which is connected in a defined step of the call: namely,

For the reception and recording of the digits of the number of subscribers A and B -- AK-FIR1;

For marking the time of receiving the response signal -- AK-FIR2;

For marking the time of receiving the disconnect signal -- AK-FIR3;

In addition, there is an AM-FIR system for recording a call without an answer.

In the case of technical damage in the TT equipment, the blocking relay creates a circuit for blocking calls from all the FIR systems.

If more than one ZSL system references the TT at the same time, the identifier selects and services only one, giving preference to calls requiring recording of the end of call. On the first reference, after recognition of the FIR system, the identifier AK-FIR1 informs it that the TT equipment is ready for recording. The information from the H/N and the EMA -- subscriber B's number and the category of subscriber A -- from the ATT -- subscriber A's number is transmitted via the connector RTT in four or five steps to the recording register SMS.

The connecting relays RTT are multi-winding and provide for the connection of ten H/N registers to the recording registers of two sets of TT equipment.

The register for recording the digits SMS is used to store subscriber B's number and also the category and number of subscriber A before entering them in the ferrite memory. Information is stored in two SMS-I modules and two or three SMS-II modules. After recording the SMS sends the confirmation signal to the FIR which releases the SMS, the RTT and the identifier to service other calls. The SMS register calls the control equipment of the ferrite memory KR-FM for entering this information in the ferrite memory FM. In the ferrite memory FM every FIR corresponds to its own memory rows.

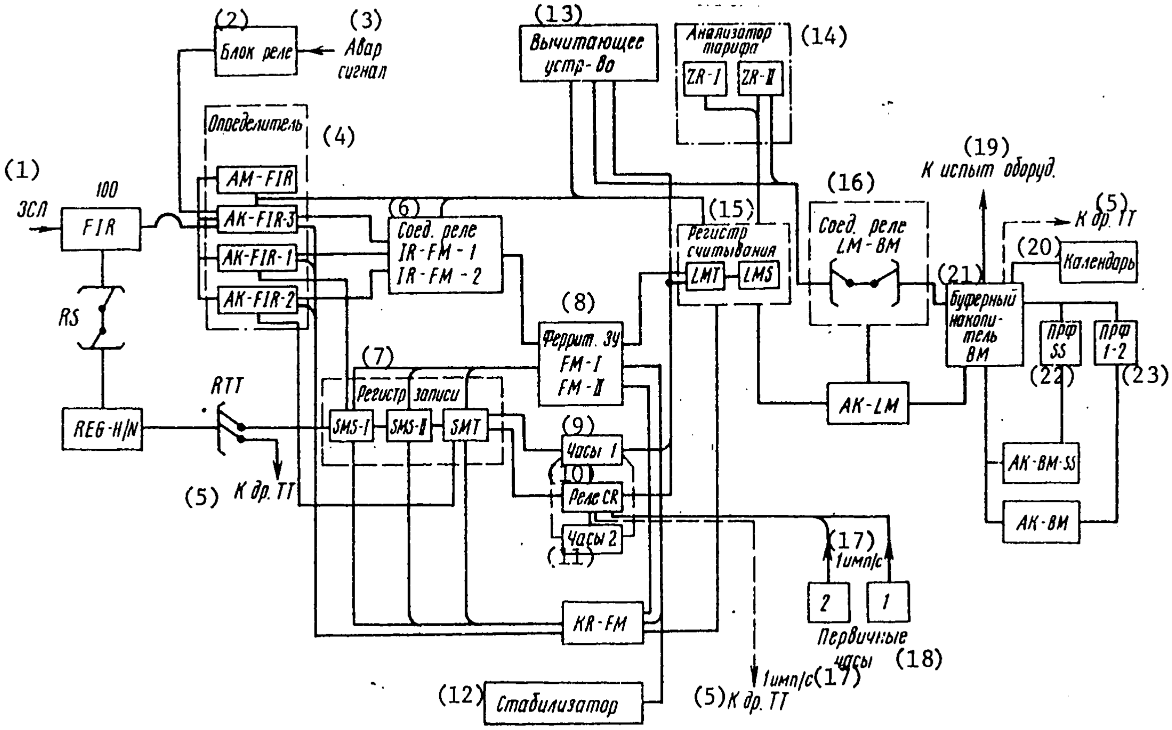

Figure 6.7 Structural diagram of the automatic charge computing equipment

Key:

1. ZSL
2. Blocking relays
3. Emergency signal
4. Identifier
5. to the other TT
6. Connecting relays
7. Recording register
8. Ferrite memories
9. Clock 1
10. Relay CR
11. Clock 2
12. Stabilizer
13. Computer
14. Rate analyzer
15. Read register
16. Connecting relays
17. 1 pulse/second
18. Primary clock
19. to the test equipment
20. Calendar
21. Buffered memory
22. PRF SS
23. PRF 1-2

The KR-FM equipment performs the following functions:

It simultaneously transmits only one call to the ferrite memory, operating as a connector;

It controls inclusion of the series in the FM memory in accordance with the number of the calling FIR;

It generates pulses needed for recording, erasure and read-out of the information. The wires from the KR-FM are connected through to the corresponding rows of the FM for transmission of the recording, erasing and reading pulses using the multi-winding connecting relays IR-FM.

The ferrite memory FM consists of two FM1 and FM2 systems operating in different combinations depending on the number of digits in the subscriber B's number. The system containing one FM1 and one FM2 is used in cases where the numbers of subscribers B contain up to ten digits. The system consisting of two FM1 provides for the possibility of storing the subscriber B's number containing up to 16 bits.

On the second reference to the TT, the call from the given FIR goes to the identifier AK-FIR2 after receiving the answer signal. Again, FIR is recognized, the register for recording the answer time SMT is busied, which, calling the automatic clock, receives data on the time of day in tens and units of hours, minutes and tenths of minutes. The SMT register calls the KR-FM to record this data in the magnetic memory. The confirmation signal is sent, on reception of which the FIR releases the SMT, RTT and the identifier for servicing the other calls.

When the disconnect signal arrives in the FIR system, the TT equipment is again called. The read registers LMS and LMT are connected to the identifier AK-FIR3. All of the information recorded in the magnetic memory is transmitted to the read registers in three steps. The time of arrival of the disconnect signal in the magnetic memory is not recorded. After output of all of the information the confirmation signal is sent, and the FIR releases all of the devices for servicing other calls.

The LMS and LMT read registers store the information after it is read out of the magnetic memory and control the computer and rate analyzer.

The computer is used to calculate the length of the call by subtracting the answering time from the time of arrival of the disconnect signal. The data on the time of arrival of the disconnect signal are transmitted directly from the automatic clock, and the data on the time of arrival of the answer signal, from the LMT. Clock I (the main clock) and clock II (the reserve clock) make up the automatic clock system. The relay system CR monitors their operation and sends an emergency signal if the difference in the clock readings exceeds the adjustment level by 6, 12, 18, 24 and 30 seconds.

The rate for the given call is determined by the rate analyzer which is designed to determine 100 different rates. The rate information is transmitted to the buffered storage in the form of tens and units in the "2 out of 5" code.

After completion of processing of the data, the calling relays AK-LM and connecting relays LM-BM are used to call the free buffered storage to which the following information is transmitted: the disconnect signal time, the FIR number, the call length, and the rate.

The calling relays AK-LM pick up the calls from the read registers of two sets of TT equipment and call a free buffered storage. Then the AK-LM connect the connecting relays LM-BM which connect the read registers to the buffered memory.

Two LM-BM systems and two buffered storages are provided for one TT system (for 100 FIR).

On completion of transmission of all of the information to the buffered storage, the read register and all of the devices connected to it are released. The buffered storage records the information coming from the read register and calls the automatic calendar, from which information comes on the date (the day and month of the call). The automatic calendar is common to the two buffered storage elements in each TT system (for 100 FIR).

Using the AK-BM and the AK-BMSS devices, the buffer memory calls the punches and, finding a free one, connects to it. The AK-BM controls the connection of the BM to the two punches S1 and S2 which are used to record information from the ordinary subscribers, and the AK-BMSS controls the connection of the BM to a special punch SS which is used to record information about the calls requiring direct processing (hospitals and so on). On completion of punching, the buffered memory is released. For calculations of long-distance call charges, the punch card has the following data:

The zone [area] code, the intrazone number and category of the subscriber A;

The zone code and the intrazone number of subscriber B;

The date and time of day of arrival of the answer to the call;

The length of the call;

The rate which must be applied to the given call and certain other data.

Control Unit System

The system of control units for the switching system (Figure 6.8) includes the following: the markers M, the routing markers VM, the module connectors MG, the connectors between registers and markers RM and the test blocks TB. In addition, there are blocking units GGD and the call distributor RK/M.

The marker M controls the setting up of the call between the incoming and outgoing lines via the switching units of the line bank. Information about incoming and outgoing modules containing the indicated lines is received by the marker M from the test block TB and the routing marker VM.

A completely outfitted office contains 20 markers which, jointly with the other control units of the office, permit servicing of a maximum of 70,000 calls per hour. Each marker M can be connected to no more than 20 routing markers VM. In order that the markers M be able to access all the VM (the maximum number reaches 40), they are divided into two groups, a maximum of 10 markers in each group. The markers M of one group will have access to the routing markers VM which are connected to ten out of 20 incoming switching modules, and the markers M of the other group will have access to the VM connected to the other ten incoming modules out of 20. Thus, each marker is accessed by a maximum of ten incoming switching modules.

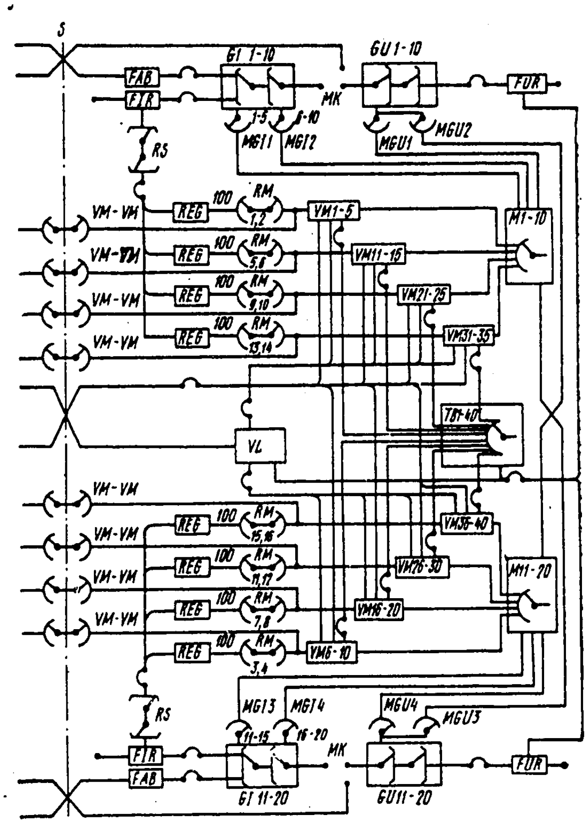

Figure 6.8. The grouping circuit of control units considering paired operation of two offices

The test and control wires between the marker M and the switching modules are connected through by the module connectors MG. Each rack of connectors of the incoming modules MGI services a maximum of five incoming modules and can be connected to ten markers M. Each rack of connectors of the outgoing modules MGU services a maximum of ten outgoing modules and can be connected to ten markers M. Thus, each marker has access to all 20 outgoing modules via two racks MGU. In marker M relays are provided for marking the routing to the paired office in the case of joint operation of two sets of offices.

The routing marker VM is designed for determining the number of the incoming module, the routing and the rate. In addition, it determines the initial time and the method of transmitting information about the number of subscriber B over the trunks and the long-distance channels. When setting up the call via four switching links, the outgoing routing is noted on the VR routing relay. For connection through two switching links, the marker M sets the flag about this in the routing marker VM and marks the routing.

For joint operation of two office systems, the long-distance channels of the outgoing routings usually are divided between these offices. The call is first set up via its own office. If at this office all the routings are busy, the routing marker VM checks all the lines of the given routing in the paired office and reports to marker M that the call will be set up via the paired office, and then it calls the routing marker VM of the given office for joint operation.

The routing markers VM are broken down into groups with a maximum number of markers in a group equal to five. Each group of five VM is connected to a group of registers using one group of connectors RM which are made up of two racks. Each rack of connectors is designed to connect a maximum of 50 registers to the group of markers. The fully equipped office contains eight groups of VM, that is 40 routing markers. One group of VM services a maximum of 10 incoming modules. For 20 incoming modules it is necessary to have at least two VM groups. Each VM has the possibility of connection to any test block TB (there can be up to 40 TB blocks at the office) for selection of the outgoing line and also to any marker M which enters into one of the two groups of markers servicing the given group of VM.

Using the VM-VM system, the routing marker of the given office is connected to the VM office operating with the given one in a pair. The group of five VM of one office is thus connected to a group of five VM of another office. In the rack there are two VM-VM sets.

The blocking units GGD are designed so that two markers will not be able to connect simultaneously to one switching unit.

The call distributors RK/M perform the function of distributing the calls coming from the registers to the VM, setting them up in order of arrival.

The test blocks TB are connected to the routings for testing and selecting a free line on the requiring routing. The use of the test blocks for line finding permits the lines of the same routing to connect to different blocks, which leads to more uniform load distribution between the outgoing module. In addition, the presence of TB permits the switching module to be taken out of service without completely blocking the load with respect to defined routings. The groups of outgoing lines are connected to the test block TB. Each group of lines forms only part of a routing. The total number of groups of lines which can be connected to one test block reaches 30. In each group there are up to 30 lines, but the total number of lines connected to one test block does not exceed 150. The office layout permits distribution of the lines connected to one test block with respect to no more than 10 different switching modules.

The lines of one routing are distributed among three test blocks. Thus, one routing contains up to 90 lines. If there are routings in which the capacity of the group of channels or lines is greater than 90, then up to 4 by-pass paths are organized permitting us to obtain up to 450 lines on a routing. The test block services from 10 to 40 routing markers.

The office equipment has an individual test block ITB for selecting a defined channel (line) on a routing. Individual channel (line) selection is required, for example, for tests and measurements performed using the automatic channel testing equipment. For the possibility of outgoing channel selection the outgoing FUR systems are assigned defined numbers. These systems are connected to an individual test block by the same wires which are used for connection to an ordinary test block. The individual test block interacts with the BM and the M. The routing marker, receiving information from the register that the transmitted digits form an individual number and that a call must be set up through the office to the outgoing system with such a number calls an individual test block.

Monitoring and Testing Equipment KIA

The technical servicing of equipment making up an office, with the exception of the punches and the information request and reception devices UZPI, is carried out by the monitoring and correcting method. As a rule, this method provides for exclusion of all preventive work and replacement of it by centralized automatic monitoring.

Constant automatic monitoring of the operation of group instruments is realized using built-in circuits which output information about the condition of the transmission of calls and technical failures to the office signal and counter system. In addition, the built-in circuits output information for the markers, the routing markers and the test blocks to the recording unit of the central recorder and also information for the charge computing equipment to the punches for subsequent recording of it on punch cards. As a rule, the built-in circuits monitor the time spent by one instrument or another for the performance of defined functions of setting up a call.

The office signal system and the memory elements used in it permit information to be obtained not only about the presence of damage or failures in transmission, but also the degree of their influence on the operating quality of the office. The storage elements include the DL and VL systems, and the equipment for monitoring the state of repair of the outgoing routings connected to the office is made up of the WL devices.

One of the means of monitoring the condition of the equipment, the operating quality of the office and routings connected to it are the counters. The readings of the counters offer the possibility not only of obtaining statistical data, but also determination of the nature and the segment of the damage.

In addition to the automatic monitoring means, the office also has instruments by means of which periodic tests are run on defined equipment assemblies, and the location and nature of damage are determined. These instruments include the office tester SPR, the instrument for testing the automatic charge computing equipment, the MKS vertical busy indicator, the load meter over the routings TRT and so on.

For periodic testing of the channels and lines the office has equipment for automatic testing of the long-distance channels with single-frequency signal system ATME, long-distance channels with two-frequency signal system APKA, trunks and recording trunks APSL.

The Cph central recorder is designed to record faults occurring at the office when setting up a call, and it is the basic instrument by means of which a fault is found in the markers VM and M and also in the instruments interacting with them. The equipment of the central recorder includes the Cph rack with relay systems installed in the equipment room with the switching equipment and a printer located in the technical monitoring room. The central recorder rack is connected to the V M, M and TB, but all calls to the central recorder equipment go through the VM. The machinery of the central recorder consists of 20 printers, which permits recording of 20 different information units in each of 20 columns. The recording on the central recorder tape makes it possible to determine the phase of the switching process in which faults occurred, what instruments have participated in unsuccessful efforts to set up a call, in what circuits of the monitored markers a short circuit has occurred. Joint analysis of the readings of all columns permits determination of the possible cause and nature of damage.

The counters are designed to monitor the operating quality of the office instruments, the routings connected to it and also for traffic observations. The following counters are provided as part of the office makeup:

Statistical reporting;

For obtaining detailed information about the operating quality of the instruments, switching modules and observation of the number of busies on the outgoing routings;

Load observations (erlangs);

For determination of the section and nature of faults.

The statistical reporting counters are designed for long-term monitoring of the operating quality of the office and the outgoing routing instruments and also the number of calls. They record the number of busies of the instruments, the cases of blocking the routings and the busy states, and the number of failures.

The counters for observing the load are connected to the incoming and outgoing line equipment and also to the registers in accordance with a given program.

The counters for determining the section and the nature of a fault are mounted on the CDK and the Cph rack.

The MKS vertical busy indicator is used to check to see that all verticals are busy. This check is made in combination with the rate measurements. The instruments are cut into the jacks to which the vertical wiring is coupled out. The indicator is equipped with a metal sheet with contact "points" corresponding to the verticals. When busy, each vertical forms a hole in this location.

The instrument for testing the automatic charge computing equipment is used to check the incoming ZSL systems together with the TT equipment. The instrument is connected to one or several incoming systems and automatically checks the switching and the charge computing functions. If a call is set up via the instruments of an office with tested outgoing system, the testing device checks the correctness of the set up in the incoming rate system corresponding to the dialed number and also that accounting pulses are sent after the proper intervals from the rate units.

The office automatic tester SPR is used for automatic testing of the outgoing and incoming line equipment and registers. The number of the called subscriber B is set up using buttons, after which the instrument automatically calls this number. If damage is encountered, the instrument stops and switches on a signal.

By the lights on the instrument it is possible to determine in what stage of setting up the call failure was detected. The instrument also permits additional tests to be run. When creating an artificial load for testing, the instrument operates continuously. The number of calls and failures is indicated on counters. For testing a register, the automatic tester is connected to the corresponding incoming equipment and by means of buttons on the rack of the register finding stage it is connected to the required register.

The automatic office tester is structurally in the form of a dolly on wheels and it can easily be moved to the switch room.

The instrument for checking out the multifrequency signalling equipment MFC is used to check the operating reliability of the multi-frequency signal system. The instrument is used to measure the levels at the inputs of the audio frequency oscillators and the operation of the frequency signal receivers is checked out.

The meter that measures the load by routings TRT is in the form of automatic testing equipment which checks the call service quality. It is connected to an ordinary subscriber line at the local office and sets up the call via the AMTS equipment, checking the call with respect to quality of transmission, charge computing, sending the call, cross-talk attenuation and ring-off signalling. All of the calls from the load meter are accounted for by the counters, and failures are entered on the central meter. The counters indicate the call distribution with respect to various test numbers of the calling subscriber A and the number of completed and incompleted calls. In the presence of failure the central recorder records in what combination of tested numbers and in what phase of setting up the call it was lost. For determination of the location of the failure, an improper connection is blocked. Various charge routings are tested one after the other by a given system and in given order, thus checking the quality of the service under the same conditions that the subscribers are given service.

The equipment for automatic channel testing ATME is designed for automatic measurement of the transmission characteristics of long-distance telephone channels with a single-frequency signal system executed from one central station of the network. The test program is printed out on a punch card or punch tape, and punch cards or alphabetic printers are used to record the test results.

The operation of the equipment is based on the application of ordinary switching units to set up calls over the channel on which the tests are run. For exchange of information between the testing units, the signalling system by the multi-frequency method is used.

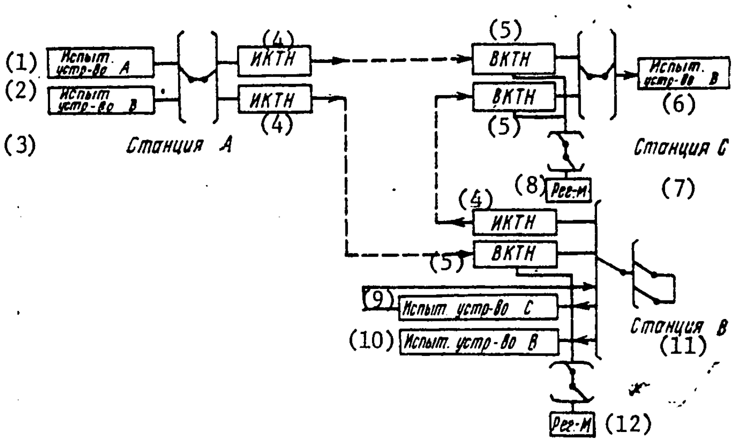

Figure 6.9. Simplified diagram of part of an automatic long-distance network with switching centers A, B, C.

Key:

1. Tester A
2. Tester B
3. Office A
4. IKTN
5. VKTN
6. Tester B
7. Office C
8. Register M
9. Tester C
10. Tester B
11. Office B
12. Register M

Figure 6.9 shows a simplified diagram of part of an automatic long-distance network with switching centers A, B and C. Office A is the station from which all measurements are made and where all data received during the measurements are recorded. From station A the long-distance channels are measured on routing B or C. In addition, instructions are transmitted from station A to station B to perform measurements on routing A or C and report the results to station A for recording.

For measurement of the transmission characteristics of the tested channel, a call is set up to the tester of station B. For measurements performed from station A, the call is set up from the tester of this station; for remote measurements the call is set up from the tester of station C which receives the test program from station A.

Thus, the equipment for automatic testing of long-distance channels with single-frequency signal system consists of the tester A for controlling the direct and remote measurements and recording the results and a different number of testers B and C, in accordance with the network configuration.

The test program includes measurements of the attenuation and noise level in the channels. Attenuation is measured on both routings on three frequencies -- 400, 800 and 2800 hertz -- with input impedance of 600 ohms. The results are presented in digital notation. The purpose of measuring the noise level is to determine whether the noise exceeds a given maximum value. The noise level can be brought to -35, -43 or -52 decibels with respect to the 0.775 volt level.

For each long-distance channel connected to the test program there is a control punchcard. This punchcard contains information for setting up a test call by which measurements and analysis are performed, an estimate is made and the results are recorded. On inputting the punchcard to the tester A a call is automatically set up over the measured channel and the tester B (or B and C) with remotely controlled measurements) is connected at the remote office. The usual switching equipment is used here. This means that all forms of equipment connected to the long-distance channel and influencing its transmission characteristics (signalling equipment, attenuators, differential systems, and so on) are also connected in the test process. On completion of measurements, the measured values, deviations from the rated attenuation with indication of whether these deviations were within the given limits or not and also individual peculiarities of the channel are recorded on the punchcard of the given channel. The tester A can control measurements of on the order of 100 channels per hour or 1000 channels in a night.

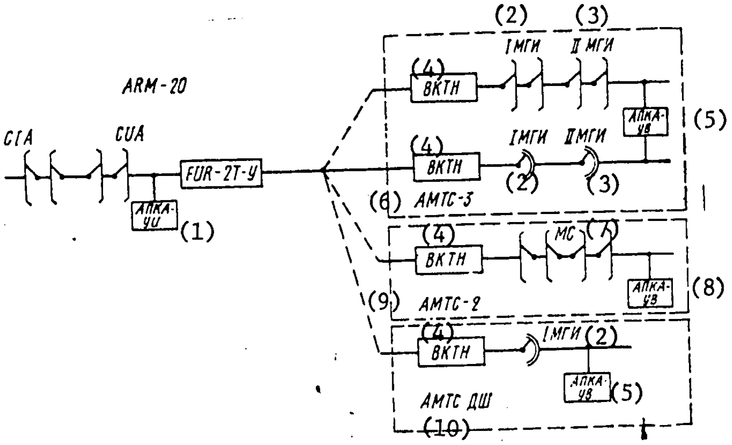

Figure 6.10. Circuit diagram of the APKA:
APKA-UV -- incoming unit for testing incoming channels and their equipment jointly with the APKA of the outgoing MTS; APKA-UI -- outgoing unit for testing the outgoing channels and their equipment jointly with the APKA of the incoming MTS.

Key:

1. APKA-UI
2. I MGI
3. II MGI
4. VKTN
5. APKA-UV
6. AMTS-3
7. MS
8. APKA-UV
9. AMTS-2
10. AMTS DSh

The ATME equipment consists of relay systems placed in the racks. The connections between the different relay systems are made using service boxes. For offices with testers A and B, three racksare required, for offices with testers C and B two racks are required, and for an office with one tester B, only one rack. In the testers A and C there is a control panel which is mounted on the bench of the tester. For recording the measurement results, tester A can be connected either to the punchcard reader with punch or to the punch tape reader with two teletypes.

The APKA equipment contains incoming units APKA-UV for testing incoming channels and their equipment jointly with the APKA of the outgoing MTS and the outgoing units APKA-UI for testing the outgoing channels and their equipment jointly with the APKA of the incoming MTS. The circuit diagram of the APKA for testing channels with two-frequency signal system is shown in Figure 6.10.

Office Signal System

The basic purpose of the office signal system (Figure 6.11) is to warn the maintenance personnel by visual and audio signals of the presence of failures in the office. Depending on the type of failure and degree of its influence on the operation of the office (and, accordingly, the urgency of elimination of the failure) various categories of signals are provided in the signal system:

1. A category A1 failure signal is sent if failures have occurred which are so serious as to cause significant or complete interruption of the operation of the office and require immediate elimination at any time of day.

2. The category A2 failure signal is sent in case of failures which increase the frequency of incomplete calls or have a significant negative effect on the service quality at the PLH [peak load hour] and require immediate elimination during working hours. This signal can be accompanied by a signal from the storage units recording failures or incompleted calls as a result of the presence of failures in the less important group devices and outgoing routings if they have a negative effect on the operating quality of the office.

3. A category A3 failure signal is sent in case of failure of individual systems or less important group devices. Such failures are eliminated at the first convenient moment.

4. The category O1 control signal is sent for manual and automatic blocking of group devices and units, and it is necessary to discover the cause for its appearance during working hours.

5. Category O2 control signal is sent in case of technical failure of individual and separate group devices, and the cause of its occurrence must be explained at the first convenient moment.

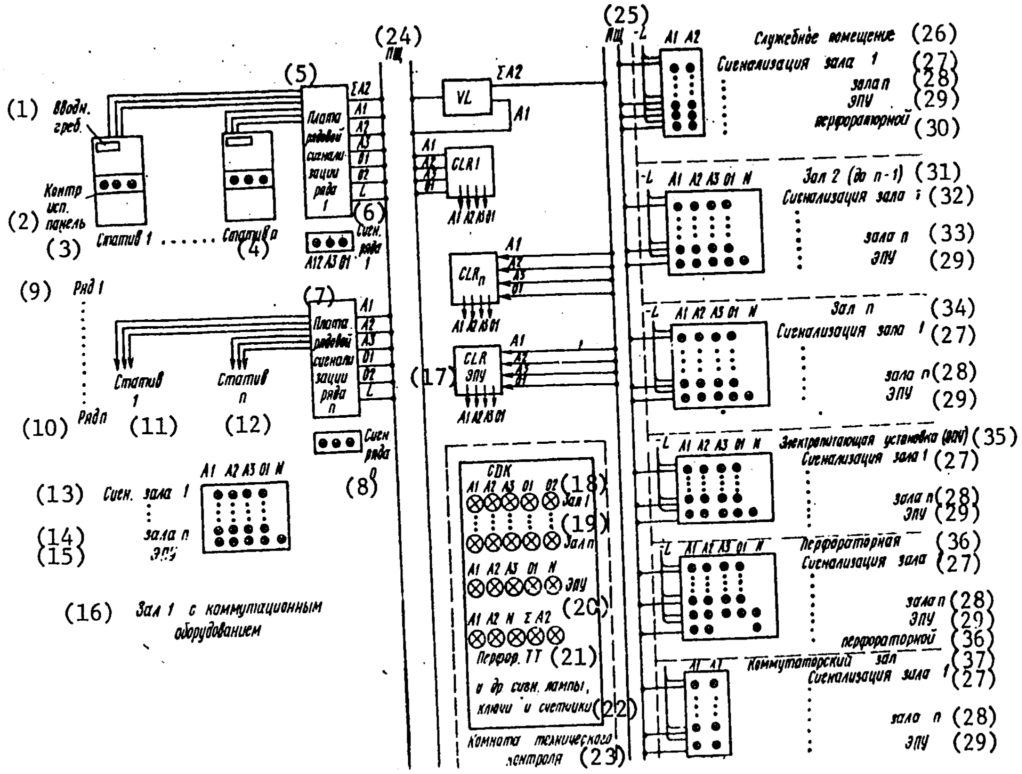

Figure 6.11. General office signalling system

Key:

1. Input terminal block
2. Monitoring test panel
3. Rack 1
4. Rack n
5. Bay 1 bay signal board
6. Bay 1 signal
7. Bay n row signal board
8. Bay n signal
9. Bay 1
10. Bay n
11. Rack 1
12. Rack n
13. Room 1 signal
14. Room n signal
15. EPU = electric power supply station
16. Room 1 with switching equipment
17. EPU
18. Room 1
19. Room n
20. EPU
21. TT punch
22. and other signal lights, switches and counters
23. Technical control room
24. PShch
25. PShch-L
26. Service facility
27. Room 1 signal
28. Room n signal
29. EPU signal
30. Punch signal
31. Room 2 (to n-1)
32. Room 1 signal
33. Roon n signal
34. Room n
35. Electric power supply station (EPU)
36. Punch
37. Switchboard room

6. The N signal is sent on disappearance of the ac network voltage feeding the electric power supply station of the office and requires that immediate measures be taken.

7. The off signal is sent from the charge computing equipment in case of failures in the output units (punches) and requires that measures be taken immediately to find and eliminate the failure at any time of day.

The signal system consists in the following: the rack signal unit; the bay signal unit; the VL, DL devices and route alarm systems; the technical and service facility signal units; the technical control room signal unit.

The rack signal unit is designed to monitor the condition of the equipment located on the given rack. The signal panel of any rack consists of a relay, fuses, buttons and jacks. Signals come from each rack with individual or group equipment to the office signal system:

Blowout of the rack fuses SSL (the SSLS light burns on the rack);

Blowout of the main fuses of the panels SSL-V (the SLS-V light burns on the rack);

Blowout of the minor fuses of the panels SL;

Technical failure FL;

Blocking BL.

The main fuses control the feed circuit of the panels on the racks with group and individual equipment, on failure of which the device or equipment group on the given rack is completely removed.

The minor fuses control the feed circuit of individual relay systems and auxiliary relays and also the signal lights on the rack control panels.

The bay signal unit is designed to monitor the operation of the racks in the given bay. The bay signal panel must receive signals from the racks of the given bay and transmit them to the office signal system. All of the wires over which the signals from the racks of one bay reach the bay signal panel are connected to the outside of the pins of the auxiliary input terminal block. On the inside of this terminal block, all the signals coming from the racks of one bay are combined into the corresponding signal categories A1, A2, A3 and so on by means of jumpers.

After response of the relays R1, R2, R3, R4 located on the bay signal panel, the corresponding lights burn on the light display of the bay. On the intermediate distributing frame (on the vertical shelf side) the signal wires of all bays of the given equipment room are connected in parallel.

The VL, DL and signal units by trunks are designed for monitoring the operation of the control equipment and channels (lines) of the outgoing trunks and make it possible to have an additional signal system for the condition of the corresponding equipment.

The VL determines that in a group of markers M and VM the number of failed units has reached the maximum admissible value as a result of blowout of the fuses, and sends the signal A1 to the equipment facility signal unit (the CLR) where racks M and VM are installed, and it sends signal A2 to the technical control room.

The DL determines the group of control units (RS, KS, REG, VM and M) in which the admissible percentage of incompleted calls has been exceeded for the given group as a result of functional failures, and it sends signals A1 or A2 to the equipment facility signal unit where the indicated devices are located, and it sends the signal from the corresponding DL directly to the technical control room.

The route alarms determine whether there are blocked (failed) channels on any of the routings and whether the number has exceeded the admissible maximum for this routing.

The number of DL and route alarm systems depends on the capacity of the office and, consequently, on the number of control devices and outgoing routings connected to the office.

The alarm systems of the equipment facilities with switching equipment include the central alarm relay system CLR and a light display.

The purpose of the CLR system is to receive signals from the equipment in the given equipment facility and other equipment facilities, including the technical control room. The signals come from the bay signal panels (A1, A2, A3 and 01) from the VL, DL and route alarm system and they are transmitted to the light display.

The most important signals are also output to certain service facilities, for example, to the panel in the chief engineer's office (A2 and A1).

The light display permits observation of the alarm signals if personnel are in one of the equipment facilities (for example, when eliminating failures).

A CLR is installed in each equipment facility in which switching equipment is located. A separate CLR is provided to connect the electric power supply station alarm equipment. The punch room and switchboard rooms do not have central alarm relay systems, for failures of the equipment located in these rooms have no influence on the switching process and, consequently, there is no need to send signals from the indicated facilities to other equipment facilities except the technical control room.

The technical control room alarm equipment is concentrated in the monitor bays CDK to which all types of signals are coupled out coming from the equipment and service facilities, and together with the other monitoring and display equipment this equipment is designed to organize technical maintenance by the monitoring and correcting method. The given equipment permits service personnel in the technical control room to determine the section and possible nature of failures by means of signal lights, switches and meters and also the central recorder.

The lights for observing the switching process which monitor the operation of the main control units VM and M play a special role in the alarm system. Each step in setting up a call is noted by switching a certain light on (off). The lights are coupled out to the monitoring and testing panels of the marker equipment racks, and they are duplicated in the technical control room. In addition, all of the racks (including the VM and M racks) have individual buttons and lights for each type of equipment which perform auxiliary functions of monitoring and observing the operation of the corresponding equipment and facilitating the testing of it.

6.7. Calculating the Volume of Office Equipment

Initial Data

Materials analogous to the materials listed in section 5.6 for the AMTS-4 are used as the initial data for calculating the volume of ARM-20 equipment. In addition, before beginning the calculation, the problem must be solved of whether to design one office for the installation or two offices with paired operation. This decision is based on preliminary calculation of the total number of lines and channels to be connected to the switching system of the office. The version of the organization of the incoming communications with the ATS of the local networks -- via four or two switching links -- is chosen simultaneously on the basis of a technical-economic comparison of these versions. Solving the indicated problems makes it possible to compile a structural diagram of the designed office which determines the specific composition of the equipment to be calculated.

The initial data on the number of channels and lines connected to the office, their load and also data on the incoming traffic flow distribution with respect to outgoing routings are presented in tables of the type of Tables 5.4 and 5.5. (compiled for the AMTS-4). The data on the operating indices are analogous to those used for the AMTS-4.

The average busy time of the different equipment, seconds, when setting up one call is presented below for the ARM-20 office:

UZPI (ANR) equipment	2.6
Register:	
H/N	29
2T	20
Y/O	18
Code receiver KM-V	4
Code transmitter	
KS-D	8
KS-K	5
KS-V	5

Calculating the Number of Calls Coming to the Office in the PLH [Peak Load Hour]

As is known, the number of calls is defined by the expression $B=Y \cdot 60 / T_B$. The values of the load Y for each type of channel and line connected to the AMTS are known from the initial data, and the average channel (line) busy time for one call T_B is determined by the operating indices.

As an example, let us present a calculation for an office with the same initial data as were used in the example for the AMTS-4 (see Tables 5.4 and 5.5). It must be noted that at the ARM-20 office, in contrast to the AMTS-4, there is no equipment for four-wire physical lines. As a result of these lines in the example with ARM-20, the number and load of the two-wire physical circuits of the ZSL and SLM are increased respectively. In addition, in contrast to the AMTS-4, the ARM-20 office does not have AO waiting lines connected to the outgoing bank of the AMTS-4 switching system modules, but there are lines (in smaller number) to the automatic answering device of the monitoring and testing equipment.

The data on the composition of the channels and lines, their load and also the traffic flow distribution at the ARM-20 are presented in Tables 6.1 and 6.2.

The proposed ratio of local network ATS with respect to types of equipment is as follows: crossbar 30%, 10-step 70%. The degree of equipment of the ATS with AON equipment is taken as 75%. The remaining 25% of the ATS are serviced by the method where the subscriber dials his own number. The total number of routings connected to the switching bank of the office (considering development) is taken as 120. For semi-automatic outgoing service, the number of information units is taken equal to the number of requests coming over the ZSL to the long-distance switchboards. Of the number of information units, 50% are complex and 50% are simple.

Let us calculate the number of calls for our example, using the data from Table 6.1 and 6.2.

1. The number of calls routed to the outgoing long-distance channels with single-frequency signalling system (FUR-T-Y):

For automatic calling from the GATS and TsS

$$B^{(1)}_{\text{исх.а}} = Y_{\text{исх.а}} \cdot 60/T_{\text{в.а}} = (100 + 80 + 82)\,60/2,1 = 7500;$$

Key: 1. outgoing a

For automatic tandem calling from the incoming long-distance channels

$$B_{\underset{(2)}{\text{транз}}} = Y_{\text{транз}} \cdot 60/T_{\text{в.а}} = 40 \cdot 60/2,1 = 1143;$$

Key: 1. tandem

From the subscribers of the order-circuit ATS

$$B_{\underset{(1)}{\text{исх.сл}}} = Y_{\text{исх.сл}} \cdot 60/T_{\underset{(2)}{\text{в.сл}}} = \frac{17 \cdot 60}{0,7} = 1460;$$

Key: 1. outgoing. order; 2. B. order

For semi-automatic calling from a switchboard via the FIR-L-0

$$B^{(1)}_{\text{исх.п/а}} = Y_{\text{исх.п/а}} \cdot 60/T^{(2)}_{\text{в.п/а}} = 81 \cdot 60/2,5 = 1944.$$

Key: 1. outgoing.semi; 2. B. semi

The total number of calls to the outgoing long-distance channels with single-frequency signalling system

Table 6.1

Types of channels and lines	Designation of line equipment	No of channels, lines	Load, erlangs
Incoming channels and lines			
Long-distance channels with signalling system:			
Single-frequency	FIR--T-Y	500	400
Two-frequency	FIR-2T-Y	500	400
ZSL from the GATS:			
Physical	FIR-ZL-H	600	300
Transmission system channels	FIR-ZT-H	400	200
ZSL from the zone TsS -- the same	FIR-ZT-N	650	325
Lines:			
From the long-distance switchboards	FIR-L-O	406	334
From the order-circuit ATS	FIR-S-E	49	34
Total		3105	1993
Outgoing channels and lines			
Long-distance channels with signalling system:			
Single-frequency	FUR-T-Y	500	400
Two-frequency	FUR-2T-Y	500	400
SLM to the GATS:			
Physical	FUR-L-H	375	300
Transmission system channels	FUR-T-H	375	300
SLM to the zone TsS -- transmission system channels	FUR-T-N	676	512
Lines:			
To long-distance switchboards	FUR-L-O	63	43
To order-circuit ATS	FUR-SE	56	38
To recorded voice equipment	FUR-S	36	-
To the automatic answering device	FUR-P	5	-
Total		2586	1993

Table 6.2

Наименование входящих комплектов (1)	(2) Общая входящая нагрузка	(3) Нагрузка исходящих комплектов, Эрл						
		FUR-T-Y	FUR-2T-Y	FUR-L-H	FUR-T-H	FUR-T-N	FUR-L-O	FUR-SE
FIR-T-Y	400	40*	—	95,5	95,5	145	10	14
FIR-2T-Y	400	—	40*	95,5	95,5	145	10	14
FIR-ZL-H	300	100	100	—	—	92	8	—
FIR-ZT-H	200	80	80	—	—	35	5	—
FIR-ZT-N	325	82	82	63	63	25	10	—
FIR-L-O	334	81	81	46	46	70	—	10
FIR-SE	34	17	17	—	—	—	—	—
(4) Итого	1993	400	400	300	300	512	43	38

Key:

1. Identification code for the incoming equipment
2. Total incoming load
3. Outgoing equipment load, erlangs
4. Total

*In the example a tandem connection is provided between the like equipment of the long-distance channels with single-frequency and two-frequency signalling systems. Under the specific conditions a tandem call can be made between these systems in any combinations.

Let us determine the number of calls routed to the outgoing long-distance channels with two-frequency signalling system analogously:

$$B_{\text{FUR-2T-Y}} = 12\,047.$$

2. The number of calls coming over the incoming long-distance channels with single-frequency signalling system (FIR-T-Y):

For automatic calling to the GATS and TsS of its zone

$$\underset{(1)}{B_{\text{вх.а}}} = \frac{Y_{\text{вх.ч}} \cdot 60}{T_{\text{вх.а}}} = (95{,}5 + 95{,}5 + 145)\,60/2{,}1 = 9600\,;$$

Key: 1. in. a

For automatic tandem connections to the outgoing long-distance channels

$$B_{\text{tandem}} = 1143;$$

To the order-circuit ATS subscribers

$$B^{(1)}_{\text{вх.сл}} = Y_{\text{вх.сл}} \cdot 60/T_{\text{вх.сл}} = 14 \cdot 60/0{,}7 = 1200\,;$$

Key: 1. in. order

For semi-automatic connections to the switchboards via the FUR-L-O -- reception of a request from the opposing office

$$B^{(1)}_{\text{вх.п/а}} = Y^{(1)}_{\text{вх.п/а}} \cdot 3600/T_{\text{вх.п/а}} = 10 \cdot 3600/40 = 900.$$

Key: 1. in. semi

The total number of calls coming in over the incoming long-distance channels with single-frequency signalling system

$$B_{\text{FIR·T·Y}} = 9600 + 1143 + 1200 + 900 = 12\,843.$$

Let us determine the number of calls over the incoming channels with two-frequency signalling system analogously

$$B_{\text{FIR·2T·Y}} = 12\,843.$$

3. The number of calls coming over the ZSL to the long-distance switchboards via the FUR-L-O in the case of semi-automatic service (including 50% requests and 50% information units):

With respect to reception of requests from the GATS and STS subscribers of its zone

$$\underset{(1)}{B_{\text{зак}}} = Y_{\text{зак}} \cdot 0,5 \cdot 3600/T_{\text{зак}} = (8 + 5 + 10)\, 0,5 \cdot 3600/55 = 753\,;$$

Key: 1. req

For dispatching of simple and complex information units to the subscribers

$$B^{(1)}_{\text{спр}} = B^{(2)}_{\text{пс}} + B^{(3)}_{\text{сс}} = Y^{(4)}_{\text{зак}}\, 0,25 \cdot 3600/T^{(2)}_{\text{пс}} + Y^{(4)}_{\text{зак}}\, 0,25 \cdot 3600/T^{(3)}_{\text{сс}} = (8 + 5 + 10)\, 0,25 \cdot 3600/30 + (8 + 5 + 10)\, 0,25 \cdot 3600/180 = 805.$$

Key: 1. information unit; 2. simple information unit; 3. complex information unit; 4. req;

The total number of calls coming over the ZSL to the long-distance switchboards via the FUR-L-O

$$B_{\text{FUR·L·O}} = \underset{(1)}{B_{\text{зак}}} + \underset{(2)}{B_{\text{спр}}} = 753 + 805 = 1558.$$

Key: 1. req; 2. information unit

4. The number of calls serviced by the ZSL and the SLM in the case of intrazonal service:

Outgoing from the GATS to the zone TsS via the FUR-T-N

$$B^{(1)}_{\text{з.исх}} = Y^{(1)}_{\text{з.исх}} \cdot 60/T^{(2)}_{\text{в.СЛМ з}} = (92 + 35)\, 60/1,7 = 4482\,;$$

Key: 1. zone. out; 2. B. SLM z

Incoming over the ZSL from the TsS (FIR-ZT-N) to the GATS via the FUR-ZL-H and FUR-ZT-H

$$B^{(1)}_{\text{з.вх}} = Y^{(1)}_{\text{з.вх}} \cdot 60/T^{(2)}_{\text{в.ЗСЛз}} = (63 + 63)\,60/2 = 3780\,;$$

Key: 1. in; 2. B. ZSL z

Tandem calls within the zone via the FIR-ZT-N and the FUR-T-N

$$B^{(1)}_{\text{з.траиз}} = Y^{(1)}_{\text{з.транз}} \cdot 60/T^{(2)}_{\text{вСЛМ}_\text{з}} = 25 \cdot 60/1{,}7 = 882.$$

Key: 1. z. tandem; 2. B. SLM_Z

The total number of calls with intrazonal service

$$\underset{(1)}{B_{\text{з}}} = \underset{(2)}{B_{\text{з.исх}}} + \underset{(3)}{B_{\text{з.вх}}} + \underset{(4)}{B_{\text{з.транз}}} = 4482 + 3780 + 882 = 9144.$$

Key: 1. z; 2. z. out; 3. z. in; 4. z. tandem

5. The total number of calls coming over the ZSL from the GATS and the TsS

$$\begin{aligned} B^{(1)}_{\text{ЗСЛ}} &= B^{(2)}_{\text{нсх.а(FUR-T-Y)}} + B^{(3)}_{\text{нсх.а(FUR-2T-Y)}} + \\ &+ B^{(4)}_{\text{з(FUR-T-N)}} + B^{(5)}_{\text{ЗСЛ п/а(FUR-L-O)}} = 7500 + 7500 + \\ &+ 9144 + 1558 = 25\,702. \end{aligned}$$

Key: 1. ZSL; 2. out. a (FUR-T-Y); 3. out. a (FUR-2T-Y); 4. z; 5. ZSL semi

6. The number of calls routed from the long-distance switchboards for outgoing semi-automatic calling via the FIR-L-O to the GATS and the TsS of its zone

$$B^{(1)}_{\text{СЛМ}_{\text{п/а}}} = Y^{(1)}_{\text{СЛМ}_{\text{п/а}}} \cdot 60/T^{(1)}_{\text{з.СЛМ}_{\text{п/а}}} = (46 + 46 + 70)\,60/5 = 1944.$$

Key: 1. SLM_{semi};

7. The total number of calls routed to the GATS and the one TsS

$$\begin{aligned} B^{(1)}_{\text{СЛМ}} &= B^{(2)}_{\text{вх.п (FIR-T-Y)}} + B_{\text{вх.а (FIR-2T-Y)}} + \underset{(3)}{B_{\text{з}}} + \underset{(4)}{B_{\text{СЛМ п/а}}} = \\ &= 9600 + 9600 + 9144 + 1944 = 30\,288. \end{aligned}$$

Key: 1. SLM; 2. in. a; 3. z;. 4. SLM semi

8. The number of calls routed from the MK (FIR-L-O) to the order circuit ATS

$$B^{(1)}_{\text{МК сл}} = Y^{(2)}_{\text{МК сл}} \cdot 60/T_{\text{в.сл}} = 10 \cdot 60/0{,}7 = 857.$$

Key: 1. MK order; 2. order

9. The total number of calls routed from the MK via the FIR-L-0,

$$B_{\text{FIR-L-0}} = B^{(1)}_{\text{исх.п/а(FUR-T-Y)}} + B^{(1)}_{\text{исх.п/а(FUR-2T-Y)}} + \\ + B^{(2)}_{\text{СЛМ п/а}} + B^{(3)}_{\text{МК сл}} = 1944 + 1944 + 1944 + 857 = 6689.$$

Key: 1. out. semi; 2. SLM semi; 3. MK order

10. The total number of calls routed to the order-circuit ATS

$$B^{(1)}_{\text{сл}} = B^{(2)}_{\text{вх.сл(FIR-T-Y)}} + B^{(2)}_{\text{вх.сл (FIR-2T-Y)}} + B^{(3)}_{\text{МК сл}} = \\ = 1200 + 1200 + 857 = 3257.$$

Key: 1. order; 2. in. order; 3. MK order

11. The number of calls coming from the GATS and the TsS to the recorded voice equipment MG:

To the "incorrectly dialed number" information channel

$$B^{(1)}_{\text{МГ1}} = B^{(2)}_{\text{ЗСЛ}} \cdot 0,1 = 25702 \cdot 0,1 = 2570;$$

Key: 1. MG1; 2. ZSL

To the "call the operator" information channel

$$B^{(1)}_{\text{МГ2}} = B^{(2)}_{\text{ЗСЛ}} \cdot 0,05 = 1285.$$

Key: 1. MG2; 2. ZSL

The total number of calls in the PLH which the switching system must service

$$B^{(1)}_{\text{КС}} = B_{\text{FUR-T-Y}} + B_{\text{FUR-2T-Y}} + (B_{\text{FIR-T-Y}} - B^{(2)}_{\text{транз}}) + \\ + (B_{\text{FIR-2T-Y}} - \underset{(2)}{B_{\text{транз}}}) + \underset{(3)}{B_{\text{ЗСЛ}_{\text{п/а}}}} + \underset{(4)}{B_{\text{з}}} + \underset{(5)}{B_{\text{СЛМ}_{\text{п/а}}}} +$$

Key: 1. KS; 2. tandem; 3. ZSL_{semi}; 4. z; 5. SLM_{semi}; 6. MK order; 7. MG1; 8. MG2

Calculating the Number of Office Equipment Units

Switching System. The number of switching modules depends on the number of channels and lines to be connected to the switching banks and the magnitude of the load which these modules must service when fulfilling the quality index norms. Considering the carrying capacity of the switching system of one office, the average load for one point of the switching bank must not exceed 0.65 erlang.

The type of switching modules, that is, their capacity on the intermodular line side is determined on the basis of calculating the number of intermodular lines required to service the designed load. The required number of switching units is more precisely determined by the calculated number of intermodular lines.

Initially the number of switching modules is determined by the number of included lines and channels and the capacity of the switching bank of one module: $n_{GI}=N_{in}/200$; $n_{GU}=N_{out}/200$.

The number of intermodular lines is calculated beginning with the magnitude of the load on the group of lines between each pair of modules and the average equivalent load on the switching bank point. The magnitude of the equivalent load is determined as a function of the average loads individually for the point of the incoming and outgoing banks which are equal to the following: for the incoming modules $a=Y_{in}/(n_{GI}\cdot 200)$; for the outgoing modules $d=Y_{out}/(n_{GU}\cdot 200)$. Here Y_{in} and Y_{out} are the total loads of the incoming and outgoing switching bank.

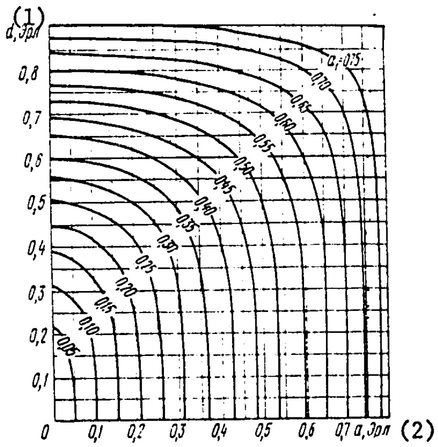

Figure 6.12. Curves for calculating the equivalent load on a bank point

Key:
1. d, erlangs
2. a, erlands

If a=d, then the equivalent load $a_1=a=d$. If $a \neq d$, then the equivalent load a_1 is determined by the curves in Figure 6.12.

The load on a group of intermodular lines is determined beginning with the fact that when coupling each incoming module to each outgoing module the load is distributed equally among all modules:

$$A = Y_{\underset{(1)}{\text{исх}}}/(n_{GI}\, n_{GU}).$$

Key: 1. out

The number of lines in the intermodular group is determined depending on the values of A and a_1 for a loss norm P=0.002 by the curves in Figure 6.13. Since the capacitance of the group must be a multiple of 5 (by the requirements of the circuitry), the number found by the curves is rounded correspondingly to the next highest number.

Beginning with this number of intermodular lines (200, 300 or 400), the type of modules is determined. If the number exceeds 400, the number of modules must be increased.

The number of MKS racks is determined in accordance with the makeup of the modules and racks. One rack is made up of ten MKS (100 vertical). For link A consisting of 200 verticals, two of the MKS racks are required, and for link B consisting of 200, 300 or 400 verticals two, three or four racks are required, respectively.

Let us determine the number of racks of the switching system of the office for our example.

The number of incoming modules (preliminary) is equal to 16 (3105/200), and outgoing modules, 13 (2586/200). The average load on the bank point for the incoming module a=1993/(16·200)=0.62 erlang; for the outgoing module d=1993/(13·200)=0.76 erlang. The equivalent load on the field point (by the curves in Figure 6.12) for a=0.62 erlang, d=0.76 erlang is equal to a_1=0.68 erlang.

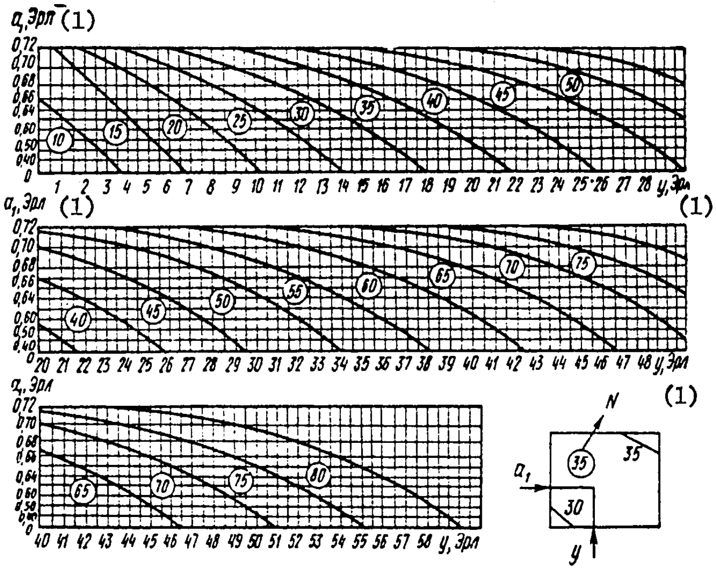

Figure 6.13. Curves for calculating the number of intermodular lines: admissible losses P=0.002; Y -- load on the group of intermodular lines; a_1 -- equivalent load on the bank point; N -- number of intermodular lines

Key:
1. erlang

The load on the group of intermodular lines A=1993/(16.13)=9.58 erlangs. The number of lines in the intermodular group (by the curves in Figure 6.13) for A=9.58 erlangs, a_1=0.68 erlang and P=0.002 is 30. The number of intermodular lines per module is as follows: outgoing 30·16=480, incoming 30·13=390.

Since the number of intermodular lines for one outgoing module exceeds the maximum capacity of the module (400 lines), the number of these modules is increased from 13 to 16. Then the load on the group of intermodular lines A=1993/16·16=7.8 erlangs. There will be 25 lines in the intermodular group for A=7.8 erlangs, a_1=0.62 erlang and P=0.002. The total number of intermodular lines per module: outgoing 25·16=400, incoming 25·16=400.

Thus, the type 200-200-400 modules are provided for the installation, each of which consists of two MKS racks of link A and four MKS racks of link B.

The total number of racks is as follows: link A (16+16)2=64; link B (16+16)4=128.

Register Equipment. The number of registers, code receivers and transmitters is calculated in combination with the register finders and connectors considering the peculiarities of their grouping.

For calculation of the load on these devices, the results of calculating the number of calls to be serviced by each type of device and also the data on the average busy time of the devices for one call are used.

The H/N register services calls from subscribers:

GATS and TsS of its zone to the outgoing long-distance channels with automatic service;

GATS and TsS of its zone to the long-distance switchboards for semi-automatic service;

Order-circuit ATS to the outgoing long-distance channels;

Local networks of its zone for intrazonal service.

The load on the registers is determined beginning with the total number of serviced calls:

$$Y_{H/N}=B_{H/N}\,t_{H/N}/3600.$$

The number of H/N registers is determined depending on the group formation of adjacent units of the station connected with them. The automatic charge computing equipment TT has direct coupling to the H/N registers. The TT equipment is made up calculating the division of the ZSL into groups (no more than 600 lines each). A ZSL group is serviced by its own registers. The number of line equipment units in the ZSL groups must be identical insofar as possible.

The line equipment units are connected to the registers via an RS-20 stage. For each ZSL group, the number of MKS of the register finding stage RS is determined: $N_{RS}=2N_{FIR}/15$. Then the total number of MKS of the stage RS and the total number of racks RS for all groups are determined.

The number of markers RSM 64/20/20 is equal to the number of racks RS-20 inasmuch as one marker designed to service eight MKS for RS-20 is placed on the same rack.

The load on each register group is determined in accordance with which line equipment units and with what load the given group of registers is serviced. For determination of the number of registers in the group it is necessary to calculate the average load on the intermediate line to the register (on the RS-H/N vertical):

$$S = Y^{(1)}_{\text{rp.per.H/N}}/\left(\frac{N_{RS}}{2}\cdot 10\right).$$

Key: 1. gr.reg.H/N

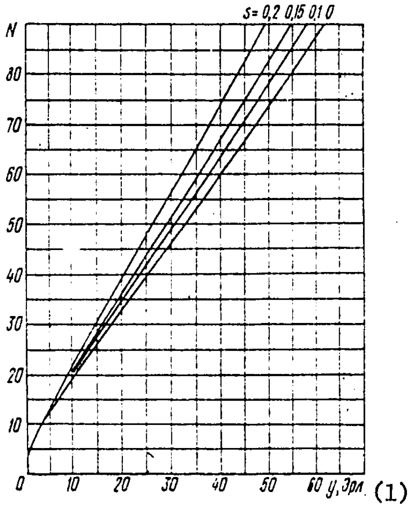

Figure 6.14. Curves for calculating the number of registers: losses P=0.002; accessibility mq=20; s -- average load on the vertical RS

Key:
1. erlangs

The number of registers for P=0.002 is determined by the curves in Figure 6.14. On the same figure the curves are calculated for a maximum of up to 90 registers. In the case where the magnitude of the load requires a large number of registers, the calculation is performed by the formula of the TsNIIS Institute:

$$\underset{(1)}{N_{\text{per}}} = 5 + 85\,Y/Y_{90},$$

Key: 1. reg

where Y_{90} is the load which 90 registers can service for a given average load S.

The number of EMA units, code receivers KM-D and systems for coupling to the automatic charge computing equipment ATT is equal to the number of H/N registers. The number of AN-S analyzers is determined calculating one for 20 H/N registers. The REG-H/N rack has four sets of registers and one AN-S set.

The device for requesting and receiving information UZPI is connected to the code receivers KM-D via the register finding stage RS-10. The load on the UZPI depends on the number of calls coming from the subscribers of the GATS and TsS equipped with AON equipment, B_{ab} and the average busy time of the UZPI for servicing one call equal to T_{UZPI}=2.6 seconds:

$$Y_{\underset{(1)}{\text{узпи}}} = (B_{\underset{(2)}{\text{аб}}}\, T_{\underset{(1)}{\text{узпи}}}/3600)\, l,$$

Key: 1. UZPI; 2. subscriber

where l is the coefficient indicating which part of the city ATS and zone TsS is equipped with AON. The average load on the intermediate line to the UZPI is determined from the expression

$$S = Y_{\underset{(1)}{\text{узпи}}}/(N_{RS}\cdot 10),\ \underset{(2)}{\text{где}}\ N_{RS} = N_{KM\cdot D}/15.$$

Key: UZPI; 2. where

The number of UZPI sets, depending on the magnitudes of Y_{UZPI} and s, is determined by the curves in Figure 6.14.

In the RS-10 stage the number of racks is determined beginning with their makeup (eight MKS and two markers on a rack).

The registers 2T are connected to the incoming FIR-2T-Y of the long-distance channels with two-frequency signalling system, and they are designed to service the incoming automatic and semi-automatic calls coming over these channels.

The load on the registers 2T is determined as a function of the total number of calls routed to the GATS and the TsS subscribers, the order-circuit ATS subscribers and the outgoing long-distance channels (in the case of tandem connection).

As a result of symmetric structure of the office with respect to the control units, the FIR-2T-Y are divided into two groups, each of which is serviced by its own register group. The line equipment is connected to the registers via the RS-20 stage. The number of MKS in the RS stage is determined individually for each group by the formula

$$N_{RS} = 2\, N_{FIR\cdot 2T\cdot Y}/15.$$

Then the total number of MKS in the RS stage is determined for both groups of line equipment. The number of markers RSM 64/20/20 is determined by the number of racks RS.

The load on each group of registers 2T is $Y_{gr\ 2T} = Y_{2T}/2$. The average load on an intermediate line to the registers is determined by the formula

$$s = \frac{Y^{(1)}_{\text{гр}\ 2\text{T}}}{(N_{RS}/2) \cdot 10}.$$

Key: 1. gr

By the curves in Figure 6.14, the number of registers in one group is determined and then the number of registers for both groups. The number of EMA devices and code receivers KM-D is equal to the number of registers 2T. The number of analzyers AN-S is equal to $N_{2T}/20$.

The Y/O registers are connected to the incoming FIR-T-Y of the long-distance channels with single-frequency signalling system and also to the FIR-L-O equipment of the lines from the long-distance switchboards, and they are designed to service calls coming:

Over the incoming long-distance channels with single-frequency signalling system with automatic coupling to the GATS and the TsS subscriber;

The same, to the order-circuit ATS subscriber;

The same, to the outgoing channels(through connection);

Over the incoming long-distance channels with single-frequency signalling system with semi-automatic service;

From the long-distance switchboards to the outgoing channels with semi-automatic service;

The same, to the SLM for the outgoing semi-automatic service;

The same, to the order-circuit ATS.

The load on the Y/O registers depends on the total number of these calls. The number of Y/O registers is calculated analogously to the calculation of the registers 2T.

The code receivers KM-V are connected to the Y/O registers for reception of information by the multi-frequency method by the "2 out of 6" code. The code receiver contains four types of systems:

The MVA is the matching part of the code receiver for interaction with the Y/O register;

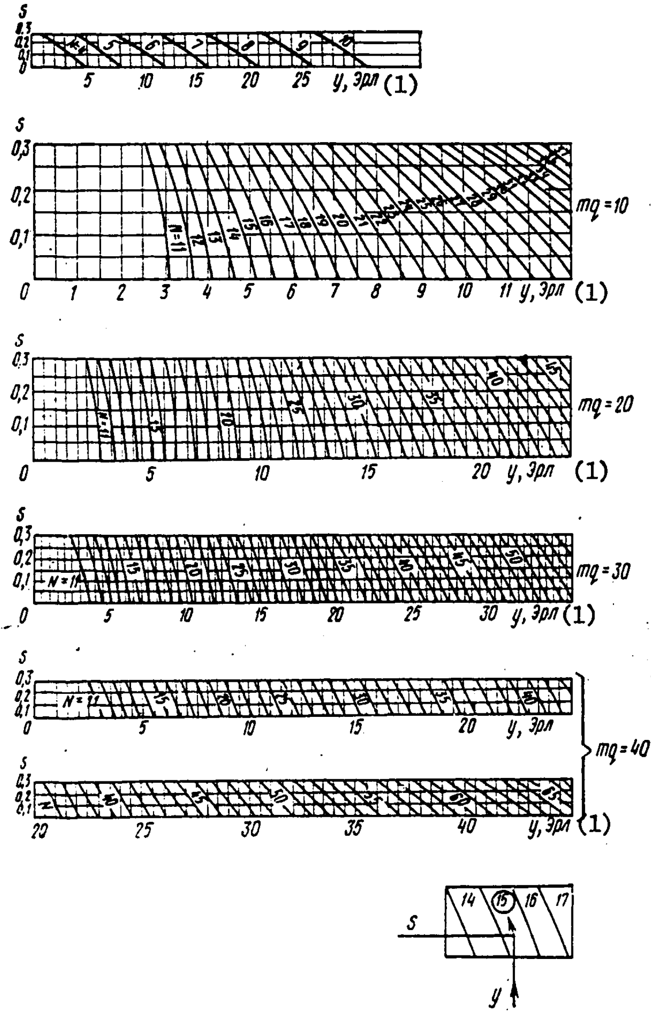

Figure 6.15. Curves for calculating the number of code receivers and transmitters for small loads:
Y -- load on the receivers or transmitters; N -- number of receivers or transmitters; s -- average load on the input SS; SS 16/40; losses P=0.001; availability mq=10, 20. 30, 40.

Key:
1. erlangs

The KMT is designed to receive information by the multi-frequency method by a "2 out of 6" code and for conversion of the frequency signals to positive "2 out of 6" pulses;

The MVS is used to check the received information for the presence of two out of six pulses and transmission of the number digits to the plus feed register over two out of five wires, and the category digit over two out of six wires;

The MTS is designed for interaction with the register connector SS.

The MVA is rigidly connected to the register, and the number of these systems is taken equal to the number of Y/O registers. The MVA are mounted on individual MVA racks, 18 sets on a rack. The rest of the code receiver equipment (KMT, MVS, MTS) is connected to the MVA via the register connector SS.

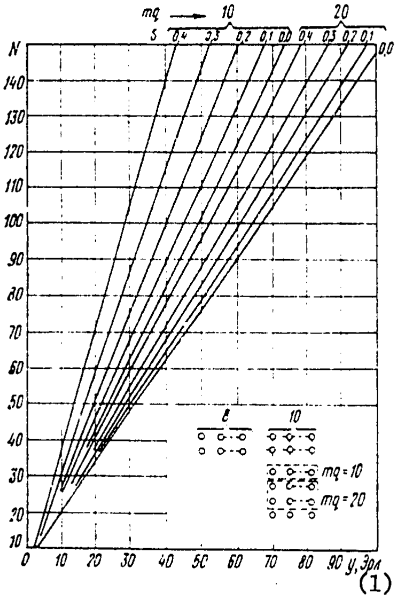

Figure 6.16. Curves for calculating the number of code receivers and transmitters for large loads:
Y -- load on the receivers or transmitters;
N -- number of receivers or transmitters;
s -- average load on the input ss;
ss 16/40; losses P=0.001; accessibility mq=10, 20

Key:

1. erlangs

The code receivers service the same number of calls as the Y/O registers; therefore the load on the receivers KM-V is determined from the following expression:

$$Y_{KM \cdot V} = B_{Y/O}\, t_{KM \cdot V}/3600.$$

The number of modules of the register connector SS is determined by dividing the number of registers Y/O by the number of inputs of the SS stage:

$$N_{SS} = N_{Y/O}/16.$$

The average load on the SS module input

$$s = Y_{KM\cdot Y}/(N_{SS}\cdot 16).$$

By the curves in Figure 6.15, the required number of receivers KM-V is determined for P=0.001, mq=40 and the corresponding value of s. The code receivers KM-V (KMT, MVS and MTS) are put together 18 sets on a rack.

The code receivers KS-D, KS-K, KS-V are connected to the registers 2T, Y/O, H/N via the connectors SS. The capacity of the SS module is 16 inputs and 40 outputs.

The number of code transmitters is calculated in the following sequence:

The load is determined for each type of transmitter depending on the number of calls subject to servicing by them and the average busy time of the transmitter for servicing one call;

The number of SS modules is determined depending on the total number of registers at the input and capacity of a module;

Beginning with the total load on all the transmitters and the number of SS modules, the average load s on one intermediate line to the transmitter is determined;

Depending on the load on each type of transmitter and the value of s, using curves in Figure 6.15 or 6.16, the number of transmitters KS-D, KS-K and KS-V is determined.

The load on the code transmitters KS-D is created by the ordinary and monitor calls, on arrival of which it is necessary to output information to the ten-step ATS and over the outgoing long-distance channels with two-frequency signalling system:

$$Y_{KS\cdot D} = (B_{Д} + B_{\underset{(1)}{кон}}m)\, t_{KS\cdot D}/3600,$$

Key: 1. monitor

where B_D is the number of ordinary calls which the KS-D transmitters must service; $B_{monitor}$ is the number of monitor calls; m is the coefficient which indicates the fraction of ten-step ATS in the total number of ATS.

The magnitude of B_D is made up of the incoming calls routed over the SLM to the ten-step TsS and GATS (B_{SLM} m) and the calls over the outgoing long-distance channels with two-frequency signalling system ($B_{FUR-2T-Y}$):

$$B_{Д} = B_{СЛМ}^{(1)} m + B_{FUR\cdot 2T\cdot У}\,.$$

Key: 1. SLM

The number of monitor calls is made up of the outgoing calls routed over the automatic service long-distance channels and the SLM to the zone TsS coming from the subscribers of the ATS not having AON equipment:

$$B^{(1)}_{\text{кон}} = B^{(2)}_{\text{исх}}(1-l),$$

Key: 1. monitor; 2. out

where ℓ is the coefficient indicating which part of the city ATS and zone TsS is equipped with AON equipment.

The load on the code transmitters KS-K is created by ordinary and monitor calls on arrival of which it is necessary to output information to the crossbar ATS

$$Y_{\text{KS-K}} = [B_{\text{к}} + B^{(1)}_{\text{кон}}(1-m)]\, t_{\text{KS-K}}/3600.$$

Key: 1. monitor

The value of B_k is made up of calls routed over the SLM to the crossbar TsS and GATS $[B_{\text{SLM}}(1-m)]$ and calls routed to the order-circuit crossbar ATS from the long-distance switchboards and the incoming automatic service long-distance channels ($B_{\text{order ATS}}$):

$$B_{\text{к}} = B^{(1)}_{\text{СЛМ}}(1-m) + B^{(2)}_{\text{сл АТС}}.$$

Key: 1. SLM; 2. order ATS

The load on the code transmitters KS-V is created by calls, on arrival of which it is necessary to output information to the outgoing long-distance channels with single-frequency signalling system:

$$Y_{\text{KS-V}} = B_{\text{[illegible]R-T-Y}}\, t_{\text{KS-Y}}/3600.$$

When determining the number of SS modules (with a capacity of 16 inputs, 40 outputs) for connecting registers to three types of code transmitters let us select the version of connection of the outputs with breakdown into three routings with an availability of 20, 10 and 10 (see Figure 6.5 d). The routing with availability of 20 calls is used to connect the type of transmitter which transmits the highest load. The number of SS modules

$$N_{\text{SS}} = (N_{\text{H/N}} + T_{2\text{T}} + N_{\text{Y/O}})\,16.$$

The average load on an intermediate line to the transmitters

$$s = (Y_{\text{KS-D}} + Y_{\text{KS-K}} + Y_{\text{KS-V}})/(N_{\text{SS}} \cdot 16).$$

The number of code transmitters KS-D, KS-K and KS-V is determined by the curves in Figure 6.15 or 6.16 depending on the magnitude of the load of each type of transmitter, the selected availability and the value of s. In the case where the load for any type of transmitter is such that the number KS exceeds 150 (the maximum number of them indicated in Figure 6.16), KS is calculated by the formula

$$N_{KS} = 150 + (Y_{KS} - Y_{150})/a,$$

where Y_{150} is the load which 150 KS can transmit for the given value of s; $a=\Delta Y/\Delta N_{KS}$ is the average load on one KS in the section from 140 to 150 KS.

On the KS-D rack there are seven sets of code transmitters, and on the KS-K and KS-V racks, five each.

Let us calculate the register equipment for our example.

H/N Registers and RS Stage. The total number of line equipment sets (ZSL and lines from the order-circuit ATS) serviced by the H/N registers according to the above-presented data is

$$600\,\text{FIR-ZL-H} + 400\,\text{FIR-ZT-H} + 650\,\text{FIR-ZT-N} + 49\,\text{FIR-SE} = 1699.$$

This number of sets is divided into approximately equal groups, in each of which there can be no more than 600 (in accordance with the makeup of the automatic charge computing equipment directly connected to the ZSL and the H/N registers); we obtain three such groups.

The line equipment is distributed by groups as follows:

Group 1(2): 200FIR-ZL-H+150FIR-ZT-H+220FIR-ZT-N;

Group 3: 200FIR-ZL-H+100FIR-ZT-H+210FIR-ZT-N+49FIR-SE.

Let us determine the number of MKS for the RS-20 stage for group 1(2)

$$N_{RS\text{-}20} = 2\frac{N_{FIR}}{15} = 2\,(200/15 + 150/15 + 220/15) = 2\,(14 + 10 + 15) = 78,$$

For group 3

$$N_{RS\text{-}20} = 2\,(200/15 + 100/15 + 210/15 + 49/15) = 2\,(14 + 7 + 14 + 4) = 78.$$

The total number of MKS for three groups $N_{RS}=3\cdot 78=234$. The number of racks RS-20 (eight MKS on a rack)

$$N^{(1)}_{\text{ст RS-20}} = 2\,(28/8 + 20/8 + 30/8) + 28/8 + 14/8 + 28/8 + 8/8 = 33.$$

Key: 1. rack RS-20

The number of calls subject to servicing by the H/N registers

$$B_{\text{H/N}} = B^{(1)}_{\text{ЗСЛ}} + B^{(2)}_{\text{исх СЛ(FUR-T-Y}} + B^{(3)}_{\text{исх СЛ) (FUR-2T-Y)}} =$$
$$= 25702 + 1460 + 1460 = 28622.$$

Key: 1. ZSL; 2. out SL(FUR-T-Y); 3. out SL (FUR-2T-Y)

The load on the H/N registers

$$Y_{\text{H/N}} = B_{\text{H/N}} T_{\text{H/N}}/3600 = 28\,622 \cdot 29/3600 = 231{,}5\ \text{Эрл.}^{(1)}$$

Key: 1. erlangs

The load on the group of ZSL systems connected to the 1(2) group of H/N registers

$$Y_{\text{FJR1 (2)}} = Y_{\text{FIR-ZL-H}} \cdot 200/N_{\text{FIR-ZL-H}} + Y_{\text{FIR-ZT-N}} \times$$
$$\times 150/N_{\text{FIR-ZT-H}} + Y_{\text{FIR-ZT-N}} \cdot 220/N_{\text{FIR-ZT-N}} =$$
$$= 300 \cdot 200/600 + 200 \cdot 150/400 + 325 \cdot 220/650 = 285\ \text{Эрл.}^{(1)}$$

Key: 1. erlangs

The load on the ZSL group connected to group 3 of H/N registers,

$$Y_{\text{FIR3}} = 300 \cdot 200/600 + 200 \cdot 100/400 + 325 \cdot 210/650 +$$
$$+ 34 = 289\ \text{Эрл.}^{(1)}$$

Key: 1. erlangs

The total load on the ZSL equipment

$$Y^{(1)}_{\text{ЗСЛ}} = 285 + 285 + 289 = 859\ \text{Эрл.}^{(2)}$$

Key: 1. ZSL; 2. erlangs

The load on group 1(2) of H/N registers

$$Y_{\text{H/N1 (2)}} = Y_{\text{H/N}} (Y^{(1)}_{\text{1 (2) гр ЗСЛ}} / Y^{(2)}_{\text{ЗСЛ}}) =$$
$$= 231{,}5\,(285/859) = 77\ \text{Эрл.}^{(3)}$$

Key: 1. 1(2) gr ZSL; 2. ZSL; 3. erlangs

The load on group 3 of H/N registers

$$Y_{\text{H/N}_3} = 231{,}5 - 2 \cdot 77 = 77{,}5\ \text{Эрл.}\ (1)$$

Key: 1. erlangs

The average load on the intermediate line to the H/N register for each group

$$s_{1\,(2)} = \frac{Y_{\text{H/N}\,1\,(2)}}{(N_{\text{RS}/2})10} = \frac{77}{(78/2)\,10} = 0{,}205\ \text{Эрл}\ ;^{(1)}$$

$$s_3 = \frac{77{,}5}{(78/2)\,10} = 0{,}208\ \text{Эрл}.$$

Key: 1. erlang

The number of H/N registers in each group in the given case will be determined by the formulae considering the increased load on the registers by comparison with the curves in Figure 6.14:

$$N_{\text{H/N}\,1\,(2)} = 5 + 85\,Y_{\text{H/N}\,1\,(2)}/Y_{90} = 5 + 85\cdot 77/49 =$$
$$= 139\,;\ N_{\text{H/N}_3} = 5 + 85\cdot 77{,}5/49 = 140.$$

The total number of registers $N_{H/N}$=2·139+140=418. The number of H/N racks: $N_{rack\ H/N}$=418/4=105 (four registers on a rack).

UZPI Equipment and RS Stage. The load on the UZPI is determined by the formula

$$Y^{(1)}_{\text{УЗПИ}} = (B^{(2)}_{\text{ЗСЛ}}\,T_{\text{УЗПИ}}/3600)\,l =$$
$$= (25\,702\cdot 2{,}6/3600)\,0{,}75 = 13{,}9\ \text{Эрл}^{(3)}$$

Key: 1. UZPI; 2. ZSL; 3. erlangs

The number of MKS on the RS-10 stage: $N_{RS}=N_{KM.D}$/15=418/15=28. The number of RS-10 racks: $N_{rack\ RS}$=28/8=4. The average load on the intermediate line to the UZPI

$$s = Y^{(1)}_{\text{УЗПИ}}/(N_{\text{RS}}\cdot 10) = 13{,}9/(28\cdot 10) = 0{,}05\ \text{Эрл.}^{(1)}$$

Key: 1. UZPI; 2. erlang

The number of UZPI (according to the curves in Figure 6.14) is 27. The number of UZPI racks (two sets on a rack) $N_{rack\ UZPI}$=27/2=14.

2T Registers and RS Stage. The number of line systems serviced by the registers 2T is equal to 500 FIR-2T-Y. The equipment is divided into two groups of 250 each. Each group is serviced by its group of registers. The number of MKS in the RS-20 stage for one group $N_{gr\ RS}=2N_{FIR-2T-Y}$/15=2·250/15=34. For two groups N_{RS}=34·2=68. The number of racks RS-20: $N_{rack\ RS}$=34/8+34/8=10.

The number of calls subject to servicing by the registers 2T, $B_{2T}=B_{FUR-2T-Y}$=12047.

The load on the registers 2T

$$\overline{Y}_{2\text{T}} = B_{\text{FUR-2T-Y}}\,T_{2\text{T}}/3600 = 12047\cdot 20/3600 = 71{,}35\ \text{Эрл.}^{(1)}$$

Key: 1. erlangs

The load on each of the two groups of registers

$$Y^{(1)}_{\text{гр 2T}} = 71{,}35/2 = 35{,}68\ \text{Эрл.}^{(2)}$$

Key: 1. gr 2T; 2. erlangs

The load on the intermediate line to the register

$$s = \frac{Y^{(1)}_{\text{гр 2T}}}{(N_{\text{RS}}/2)10} = \frac{35{,}68}{(34/2)\,10} = 0{,}21\ \text{Эрл.}^{(2)}$$

Key: 1. gr 2T; 2. erlang

The number of registers in a group (according to the curves in Figure 6.14) is 68. The total number of registers in the two groups $N_{2T}=2\cdot 68=136$. The number of racks $N_{\text{rack 2T}}=136/4=34$.

Y/O Registers and RS Stage. The number of line systems serviced by the Y/O registers is 500 FIR-T-Y and 406 FIR-L-O. Let us divide the equipment into two groups, each of which consists of 250 FIR-T-Y and 203 FIR-L-O and is serviced by its group of registers. The number of MKS in the RS-20 stage for one group

$$\overline{N}_{\text{RS-20}} = 2\,(250/15 + 203/15) = 2\,(17 + 14) = 62.$$

The total number of MKS for the two groups $N_{\text{RS}}=2\cdot 62=124$.

The number of racks RS-20

$$N^{(1)}_{\text{ст.RS-20}} = 34/8 + 28/8 + 34/8 + 28/8 = 18.$$

Key: 1. $N_{\text{rack RS-20}}$

The number of calls subject to servicing by the Y/O registers is

$$B_{\text{Y/O}} = B_{\text{FIR-T-Y}} + B_{\text{FIR-L-O}} = 12\,843 + 6689 = 19\,532.$$

The load on the Y/O registers is

$$Y_{\text{Y/O}} = B_{\text{Y/O}}\,T_{\text{y/o}}/3600 = 19532\cdot 18/3600 = 97{,}6\ \text{Эрл.}^{(1)}$$

Key: 1. erlangs

The load on each of the two groups of registers

$$Y^{(1)}_{\text{гр.Y/O}} = 97{,}6/2 = 48{,}8\ \text{Эрл.}^{(2)}$$

Key: 1. gr Y/O; 2. erlangs

The average load on the intermediate line to the register

$$s=\frac{Y^{(1)}_{\text{гр Y/O}}}{(N_{\text{RS}}/2)10}=\frac{48,8}{(62/2)\ 10}=0,157\ \text{Эрл.}\ (2)$$

Key: 1. gr Y/O; 2. erlang

The number of registers in each group (by the curves in Figure 6.14) is 83, and in two groups $N_{Y/O}=2\cdot 83=166$. The number of racks Y/O: $N_{\text{rack Y/O}}=166/4=42$.

AN-S Analyzers, Additional Storage Elements EMA and Decade Receivers KM-D. The number of analyzers AN-S is determined beginning with the fact that one analyzer services 20 registers of each type:

$$N_{\text{AN-S}}=N_{\text{H/N}}/20+N_{2\text{T}}/20+N_{\text{Y/O}}/20=$$
$$=418/20+136/20+166/20=21+7+9=37.$$

The analyzers are located on the register racks.

Additional storage elements EMA are provided in a number equal to the number of registers:

$$N_{\text{EMA}}=N_{\text{H/N}}+N_{2\text{T}}+N_{\text{Y/O}}=418+136+166=720.$$

On one rack there are 20 EMA systems for one version of the registers.

The total number of EMA registers

$$N^{(1)}_{\text{ст EMA}}=418/20+136/20+166/20=37.$$

Key: 1. rack EMA

The decade code receivers KM-D service the H/N registers and the 2T registers and are rigidly connected to these registers. The number of receivers KM-D is as follows: $N_{\text{KM-D}}=N_{\text{H/N}}+N_{2\text{T}}=418+136=554$. On one rack there are 15 receivers connected to one type of register. The number of racks KM-D: $N_{\text{rack km-D}}=$ $=418/15+136/15=38$.

KM-V Code Receivers and SS Connectors. The load on the KM-V receivers

$$Y_{\text{KM-V}}=B_{\text{Y/O}}T_{\text{KM-V}}/3600=(12\ 843+$$
$$+6689)\ 4/3600=21,74\ \text{Эрл.}\ (1)$$

Key: 1. erlangs

The number of modules SS:$N_{SS}=N_{Y/O}/16=166/16=11$. The average load on the module input

$$s=Y_{KM\text{-}V}/(N_{SS}\cdot 16)=21{,}74/(11\cdot 16)=0{,}123\ \text{Эрл}.^{(1)}$$

Key: 1. erlang

The number of code receivers KM-V (according to the curves in Figure 6.15) for P=0.001, mq=40 and s=0.123 is $N_{KM\text{-}V}=37$. On one KM-V rack there are 18 receivers. The number of racks $N_{\text{rack KM-V}}=37/18\simeq 2.1$, that is, 3.

Code Transmitters KS-D, KS-K, KS-V. The number of ordinary calls serviced by the KS-D transmitters is

$$B_{\text{д}}=B_{\underset{(1)}{\text{СЛМ}}}m+B_{\text{FUR-2T-Y}}=30\,288\cdot 0{,}7+12\,047=33\,247.$$

Key: 1. SLM

The total number of monitor calls

$$B_{\text{кон}}^{(1)}=B_{\text{исх}}^{(2)}(1-l)=(B_{\text{исх.a(FUR-T-Y)}}^{(3)}+B_{\text{исх.a(FUR-2T-Y)}}+$$
$$+B_3)(1-l)=(7500+7500+9144)\,0{,}25=6036.$$

Key: 1. monitor; 2. out; 3. out.a

The load on the transmitters KS-D

$$Y_{\text{KS-D}}=(B_{\text{д}}+B_{\text{кон}}^{(1)}m)\,T_{\text{KS-D}}/3600=$$
$$=(33247+6036\cdot 0{,}7)\,8/3600=83{,}3\ \text{Эрл},^{(1)}$$

Key: 1. monitor; 2. erlangs

where the coefficient m=0.7 determines the portion of ordinary and monitor calls from a ten-step ATS.

The number of ordinary calls serviced by the KS-K transmitters is

$$B_{\text{к}}=B_{\text{СЛМ}}^{(1)}(1-m)+B_{\text{сл}}^{(2)}=30288\cdot 0{,}3+3257=12\,343.$$

Key: 1. SLM; 2. order

The number of monitor calls $B_{\text{monitor}}=6036$. The load on the transmitters KS-K

$$Y_{\text{KS-K}}=[B_{\text{к}}+B_{\text{кон}}^{(1)}(1-m)]\,T_{\text{KS-K}}/3600=$$
$$=(12\,343+6036\cdot 0{,}3)\,5/3600=19{,}3\ \text{Эрл}.^{(1)}$$

Key: 1. monitor; 2 erlangs

The load on the transmitters KS-V

$$Y_{\text{KS-V}} = \dot{B}_{\text{FUR-T-Y}} T_{\text{KS-V}}/3600 = 12417\cdot 5/3600 = 17{,}2 \text{ Эрл.} (1)$$

Key: 1. erlangs

The number of SS modules

$$N_{\text{SS}} = (N_{\text{H/N}} + T_{2\text{T}} + N_{\text{Y/O}})/16 = (418 + 136 + 166)/16 = 45.$$

The average load on the intermediate line to the transmitters is

$$s = (Y_{\text{KS-D}} + Y_{\text{KS-K}} + Y_{\text{KS-V}})/(N_{\text{SS}}\cdot 16) = \\ = (83{,}3 + 19{,}3 + 17{,}2)/(46\cdot 16) = 0{,}163 \text{ Эрл.} (1)$$

Key: 1. erlang

The number of transmitters (according to the curves in Figure 6.16) for P=0.001, s=0.163 erlang is, respectively: $N_{\text{KS-D}}$=136 (for mq=20); $N_{\text{KS-V}}$=44 (for mq=10); $N_{\text{KS=K}}$=51 (for mq=10).

The number of racks is, respectively: $N_{\text{rack KS-D}}$=136/7=20; $N_{\text{rack KS-K}}$=51/5=11; $N_{\text{rack KS-V}}$=44/5=9.

General Control Units. The markers M and the route markers VM service calls both when setting up ordinary calls to subscriber B and when setting up monitor calls to subscriber A if subscriber A is connected to an ATS not equipped with AON equipment.

The number of calls reaching the markers M and VM,

$$B_{\text{M}} = B_{\text{H/N}} + B_{2\text{T}} + B_{\text{Y/O}} + (B_{\overset{(1)}{\text{исх.а}}} + \underset{(2)}{B_{з}})(1 - l),$$

Key: 1. out.a; 2. z

where $B_{\text{H/N}}$, $B_{2\text{T}}$, $B_{\text{Y/O}}$ are the numbers of calls serviced by the corresponding registers; $B_{\text{out.a}}$, B_{z} are the numbers of calls reaching the outgoing long-distance channels with automatic service and on the SLM to the zone TsS from the ATS subscribers; (1-ℓ) is the coefficient indicating which part of the GATS and TsS is not equipped with AON equipment.

The number of markers M and VM is determined depending on the number of serviced calls and RM groups by the curves presented in Figure 6.17. The group contains two RM connectors. The figure shows two families of curves. The family of curves 1 pertains to half of the office (the number of calls to 35000, M to 10, VM to 20 and RM groups to four). The family of curves 2 is designed to determine the additional number of control units M, VM and RM groups which must be added to the basic system (defined for 70000 calls per hour) for joint operation of two offices. The table in Appendix 3 can be used to calculate M and VM.

Beginning with the fact that each RM group can connect up to 100 registers to a group of route markers, the number of groups RM as a function of the number of registers is

$$N_{RM} = (N_{H/N} + N_{2T} + N_{Y/O}) / 100.$$

The obtained number of RM groups must be corrected by the curves presented in Figure 6.17 in accordance with the number of calls.

The equipment of the marker M, just as the equipment of the route marker VM occupies a whole rack. One RM relay connector rack can connect 50 registers to five route markers.

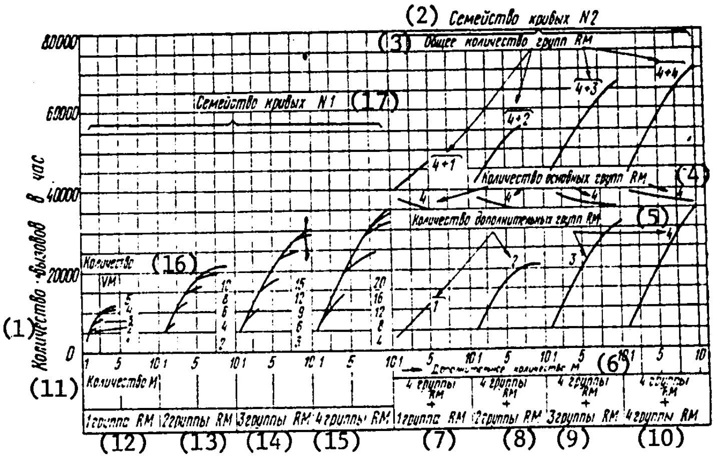

Figure 6.17. Curves for calculating the general control units M, VM and RM

Key:

1. No of calls per hour
2. Family of curves N2
3. Total number of RM groups
4. No of basic RM groups
5. No of auxiliary RM groups
6. Auxiliary number of M
7. 4 RM groups + 1 RM group
8. 4 RM groups + 2 RM groups
9. 4 RM groups + 3 RM groups
10. 4 RM groups + 4 RM groups
11. No of M
12. 1 RM group
13. 2 RM groups
14. 3 RM groups
15. 4 RM groups
16. No of VM
17. Family of curves N1

In our example the number of ordinary and monitor calls serviced by the markers will be

$$B_M = B_{H/N} + B_{2T} + B_{Y/O} + B_{кон}^{(1)} = 28\,622 + 12\,047 + 19\,532 + 6036 = 66\,237.$$

Key: 1. monitor

In accordance with the curves in Figure 6.17 and the table in Appendix 3 the following are taken for the setup: markers M=10·2=20; M racks 20; VM route markers 16·2=32; VM racks 32; RM groups 4.2=8; RM=8·2=16; RM racks 16.

With respect to the number of registers the number of RM groups: $N_{gr\ RM}=(418+136+166)/100=8$.

The MGI and MGU module connector racks are designed in the number satisfying the following layout possibilities: the MGI rack can service a maximum of five incoming modules; the MGU rack can service up to ten outgoing modules; each MGI and MGU rack can be connected to all markers of one of the groups of markers M (see the structural diagram in Figure 6.8). The maximum number of MGI racks and also MGU racks is four.

The quantitative interrelation of the switching modules, the MG racks and markers M for our example is expressed as follows.

The calculated number of incoming modules, that is, 16, is divided into four groups of four GI in a group. Each of these groups is serviced by one MGI rack, that is, four MGI racks are provided. Of them the first and second MGI racks are connected to ten M of the first group of markers, and the third and fourth MGI racks, to ten M of the second group of markers.

For the outgoing modules, the calculated number 16 is divided into two groups of eight GU in each group. Each of these groups is serviced by two MGU racks, that is, two groups×2=4 MGU racks are provided. Of them, the first MGU rack connects the first to the eighth GU to ten M of the first group of markers, the second MGU rack connects the first to the eighth GU to ten M of the second group of markers, the third MGU rack connects the ninth to sixteenth GU to ten M of the first group of markers, and the fourth MGU rack connects the ninth to the sixteenth GU to ten M of the second group of markers.

The test blocks TB and ITB are designed beginning with the following data:

It is possible to connect 120 outgoing lines to one test block TB for a TB use coefficient of 0.8; consequently, $N_{TB}=N_{out}/120$;

It is possible to connect 600 outgoing line systems FUR to one main rack of an individual test block ITB. The office can have a maximum of four main racks. When necessary, an additional ITB rack for 4·400 lines is installed which together with the main ITB racks provides for connecting a maximum of outgoing lines $N_{FUR}=600\cdot4+4\cdot400=4000$ to these racks.

In our example the number of test blocks is $N_{TB}=2586/120=22$, there are 22 TB racks. The number of ITB racks for 2586 outgoing lines is 4.600+1·400=5.

The sets of nonbusy relays for a routing VL signal the presence of at least one free line in that part of the routing which is serviced by the given set.

The outgoing lines of one routing are divided into three parts, each of which is equipped with its set of relays indicating nonbusy of the routing. The signal of nonbusy of a routing is sent to all route markers.

The number of sets of VL depends on the total number of routing markers at the office and the number of lines connected to each of the routings (Table 6.3).

Table 6.3

No of lines on a routing, no more than	No of VL systems on a routing for	
	$N_{VM} \leq 20$	$N_{VM} > 20$
90	1	2
180	2	4
270	3	6
360	4	8
450	5	10

On the VL rack there can be up to 60 relay sets. In our example it is assumed that the number of lines in each of the 120 routings does not exceed 90. Consequently, for $N_{VM}=32 (>20)$, $2 \cdot 120=240$ sets are provided. The number of VL racks is $240/60=4$.

Priority Equipment. The device for servicing calls with priority insures priority of calls of the subscribers granted the right of priority by comparison with calls from other subscribers in the case of overloading on the required routing. This is realized by blocking the given routing for some time for all calls except priority calls. Here, the FBR of the device for priority calls must receive information about granting a connection first to the priority subscribers. The device for priority calls interacts with the relay systems in the markers M and VM.

If a priority call is rejected on the blocked routing, the register again calls the route marker which tries to set up the call. The effort to make a call and set it up is repeated every 5 seconds until 90 seconds of monitored time expire, after which the register disconnects.

The priority equipment is located on the VM-VB racks, and if necessary VB racks are added. The number of these racks depends on the number of basic sets of VB-4 and VM-B making up the priority equipment.

The VB-4 system is designed for blocking routings with connection through four switching links. One VB-4 system contains relays for one routing and ten route markers. If the number of route markers is less than or equal to 20 at the office, then two VB-4 systems are required for each routing; if the number of route markers is more than 20, four VB-4 are required for each routing.

The VM-B are auxiliary equipment for the route markers when setting up a call via four switching links. One VM-B is designed to service five route markers VM.

Consequently, the number of VM-B will be $N_{VM-B}=N_{VM}/5$. It is possible to put four VM-B on one VM-VB rack. Beginning with this fact, the number of racks at the office will be $N_{VM-VB}=N_{VM-B}/4$. There are 20 VB-4 on one VM-VB rack. The total number of sets which is placed on the VM-VB rack will be $N'_{VB-4}=20N_{VM-VB}$. The remaining VB-4 ($N_{VB-4}-N'_{VB-4}$) are placed on the VB racks, each of which is designed to install 28 VB-4. The number of VB racks will be $N_{rack\ VB}=(N_{VB-4}-N'_{VB-4})/28$.

In our example the number of VB-4 routing blocking systems is determined calculating four systems for each routing, for the number of route markers at an office is 32 (>20): $N_{VB-4}=4\cdot120=480$. The number of sets of auxiliary equipment VM-B is determined calculating one VM-B for five route markers, that is, $N_{VM-B}=7$. The number of VM-VB racks is equal to two ($N_{VM-B}/4$). On two VM-VB racks it is possible to install $20\cdot2=40$ VB-4. The remaining VB-4 (480-40=440) are located on the VB racks, the number of which is determined calculating installation of 28 VB-4 on one rack: $N_{rack\ VB}=440/28=16$.

Number of Line Equipment Systems. The number of line systems of all versions is determined by the number of lines connected to the line bank of the switching system. The number of racks with line equipment is determined beginning with the fact that either 30 or 20 systems are placed on one rack depending on the type. Thirty systems each are placed on the FIR-T-Y, FIR-ZL-H, FIR-L-O, FIR-SE, FUR-L-H, FUR-T-H, FUR-L-O, FUR-S racks. Twenty systems are installed on the FIR-2T-Y, FIR-ZT-H, FIR-ZT-N, FUR-T-Y, FUR-2T-Y, FUR-T-N, FUR-SE racks.

The number of receivers of the single-frequency signal system TM-T is determined by the number of line systems of the incoming and outgoing channels of the single-frequency signalling system and also ZSL and SLM organized with respect to the transmission system channels with signalling in the talk band. On the TM-T rack there are 100 receivers.

The number of receivers of the two-frequency signalling system TM-2T is determined by the number of line systems of the incoming and outgoing channels of the two-frequency system. On the TM-2T rack there are 30 receivers.

In our example the number of racks with receivers of the single-frequency system will be $N_{rack\ TM-T}=(500+500+650+676)/100=24$, and with the receivers of the two-frequency system, $N_{rack\ TM-2T}=(500+500)/30=34$.

Automatic Call Charge Computing Equipment TT. The call charge computing equipment is made up considering the division of the ZSL into equal groups, in each of which there can be a maximum of 600 lines. Each such group is serviced by its group of H/N registers. Beginning with this factor, the number of devices of all versions entering into the TT equipment is determined separately for each ZSL group.

The TT equipment consists of racks Nos 1, 2, 4, 5 and TOR on which all elements of this equipment are placed. The number of racks No 1, 2, 4 is taken reckoning one rack for 100 ZSL systems. On rack No 5 the RTT connecting relay panels and the LM-BM connector panel are located. There are two types of No 5 racks:

a) Racks on which six RTT and four LM-BM are located;

b) Racks on which ten RTT are placed.

Each RTT serves to connect ten H/N registers to the SMS recording registers of two TT equipment sets. For each ZSL group, the following number of RTT are required:

$$N_{RTT} = \frac{N_{H/N}}{10} \cdot \frac{N_{TT}}{2} .$$

For 100 ZSL systems, two LM-BM are required to connect the read registers to two buffered storages. For each ZSL group, a number of LM-BM sets equal to $2N_{TT}$ is required.

The following number of first-type No 5 racks (N_{5a}) are required for each ZSL group

$$N^{(1)}_{\text{ст 5а}} = N_{LM\cdot BM}/4 = 2\,N_{TT}/4.$$

Key: 1. rack 5a

The number of RTT sets which are placed on racks of this type for the ZSL group will be determined from calculating

$$N^{(1)}_{RTT\,(\text{ст 5а})} = 6(N_{LM\cdot BM}/\,4) = 6\,(2N_{TT}/4) = 3\,N_{TT}.$$

Key: 1. rack 5a

For the remaining RTT, the second type racks (N_{5b}) are used, the number of which is

$$N^{(1)}_{\text{ст 5б}} = (N_{RTT} - 3\,N_{TT})/10.$$

Key: 1. rack 5b

Then the total number of racks for both types of TT equipment for all ZSL groups is determined.

The TOR racks are common to the office; their number is reckoned calculating one rack for 1500 ZSL systems.

The number of all remaining elements of TT equipment (identifiers, recorders, and so on) is determined in accordance with the makeup of the No 1, 2, 4, 5 and TOR racks.

Let us calculate the TT equipment for our example.

The total number of ZSL systems is 650+600+400=1650.

Let us divide this number of ZSL into three groups of 1650:3=550 ZSL each.

The number of No 1, 2, 4 racks (reckoning one rack for 100 ZSL systems) will be:
No 1 racks 6·3=18; No 2 racks, 18; No 4 racks, 18.

The number of RTT sets for connecting the H/N registers is determined from the following calculation:

1) For the first (second) group of H/N registers

$$N_{RTT} = \frac{N_{H/N}}{10} \cdot \frac{N_{TT}}{2} = \frac{139}{10} \cdot \frac{6}{2} = 14 \cdot 3 = 42\,;$$

2) For the third group of H/N registers

$$N_{RTT} = \frac{140}{10} \cdot \frac{6}{2} = 14 \cdot 3 = 42.$$

It is necessary to have a total of 42·3=126 RTT for the three groups.

The number of LM-BM for each group of H/N registers (two sets for 100 ZSL) $N_{LM\text{-}BM}=2 \cdot 6=12$.

The number of No 5a racks for one ZSL group $N_{rack\ N5a}=12/4=3$. The number of RTT which can be placed on three No 5a racks, $N_{RTT}=3 \cdot 6=18$.

The number of No 5b racks for the remaining systems for each ZSL group $N_{rack\ N5b}=(42-18)/10=3$.

The total number of No 5a racks is 3.3=9; the total number of No 5b racks is 3·3=9.

The number of TOR racks (calculating one rack for 1500 ZSL) $N_{rack\ TOR}=N_{ZSL}/1500=(600+400+650)/1500=2$.

6.8. Structural Features of the Equipment and Its Placement

A distinguishing feature of the office rack equipment is the fact that on all the racks the internal wiring is coupled out to service boxes. In the office there are two types of racks: BDD and BDH.

The BDD racks are equipped with all-rack service devices by means of which the wires from these racks are connected to the wires of the office cables. The service units are placed in the upper part of the rack on a vertical superstructure 500 mm high. The MKS of the incoming and outgoing switching modules and also the multiwinding relays for the RM, MGI and MGU connectors are located on the BDD racks. The BDD rack is 670 mm wide and 280 mm deep. All the remaining types of equipment are placed on the BDH racks.

The BDH racks contain individual service units on each relay panel. The circle design of the BDH racks permits installation of them with the wired sides tight against each other. The BDH rack is 961 mm wide, the depth of a double row of these racks is 425 mm. The height of the BDD and BDH racks is 2900 mm.

All of the racks, with small exception, contain monitoring and testing panels on which fuses, signal lights, test jacks, and so on are mounted at the same height from the floor.

Some of the circuit elements located inside the relay panels such as the electronic circuits on printed circuit boards are individual special-design relays are cut in using independent service boxes inside the panel.

The racks are arranged in the switch room either in solid bays with lateral passages or bays on both sides of the central passage depending on the configuration and size of the room. The spacing between bays must be no less than 700 mm. The width of the central and lateral passages must be 1500 to 2000 mm depending on the total width of the room.

The grouping of the racks in bays is decided beginning with arguments of economical use of the office cable and convenience of servicing. Thus, for example, in the same or adjacent bays it is desirable to install the following:

Line equipment and the register finding stages RS connected with it;

Common control units M, VM, TB and so on;

Different types of registers, code transmitters and connectors to them (REG, KS, SS);

MG module connectors and RM connectors for connecting the registers to the route markers.

In order to save cable it is desirable to locate the IDF [intermediate distributing frames] at locations of concentration of the largest number of cables connected to the IDF, for example, between the bays of racks with line equipment and the bays of racks of switching modules.

In addition to the ARM-20 type equipment, certain types of Soviet-made equipment, in particular, the alarm systems and systems for testing long-distance two-frequency system channels (PTN, SGTN, APKA), the AON (UZPI, GD, MG) equipment, the equipment for checking the connecting lines of the APSL and the PI-80-U punches are also installed in the office switch rooms. The PTN (TM-2T) receivers are installed on the frames of the ARM-20 racks which it is desirable to locate closer to the racks with the line equipment of the long-distance channels of the two-frequency signalling system.

The monitoring and testing equipment of the APKA and APSL is located in one bay and as close as possible to the racks with the line equipment of the long-distance channels and the trunks.
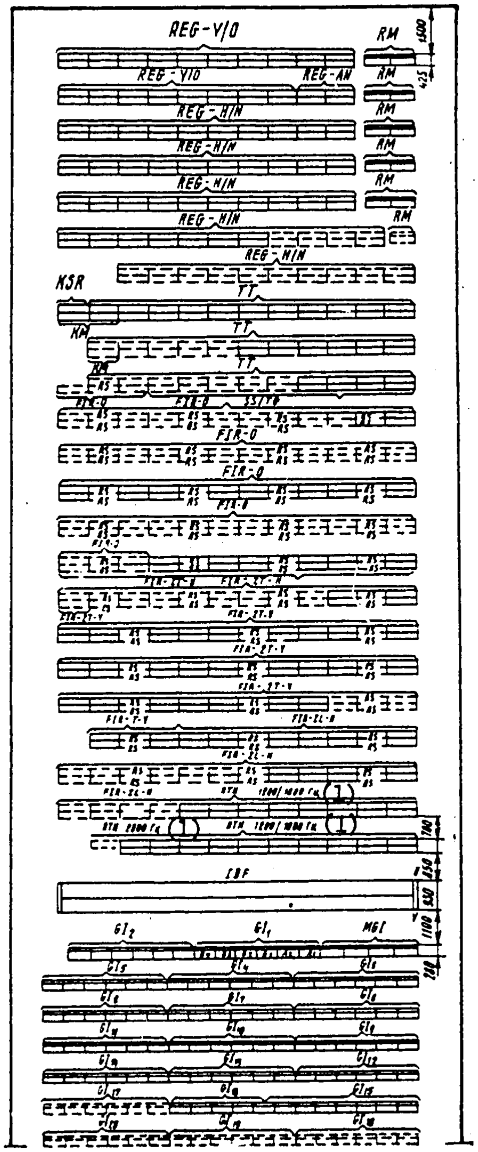
Figure 6.18. Fragment of a layout plan for the ARM-20 type AMTS equipment

Key:
1. hertz

The UZPI racks and the GD group sensor rack having a height of 2650 mm are arranged in a row with the KM-D rack. The rack of multi-frequency oscillators for the key pulsers is installed in the rack switchboard room as close as possible to the cable exit to the switchboards.

The punches and the technical monitoring equipment (CDK, DK, TK) are installed in individual facilities adjacent to the switch room.

A fragment of the equipment layout plan for the ARM-20 type AMTS switch room is shown in Figure 6.18.

6.9. Electric Power Supply for the Office

The ARM-20 type AMTS equipment is designed to take power from -48, -24, -60 volt dc power supplies and also from the ac municipal electric power network. The office equipment has stabilizers that convert the -48 V voltage to stabilized +6, -12, -18 volt voltages which are used to power the electronic devices of the equipment.

CHAPTER 7. DESIGNING AMTS KE (KVARTS) QUASIELECTRONIC AUTOMATIC LONG-DISTANCE TELEPHONE OFFICES

7.1. General Remarks

The quasielectronic AMTS office is qualitatively a new type of equipment in which both the switching elements and the control units differ from those which were used previously. Therefore in order to prepare for designing such offices it is necessary to become familiar with electronic switching equipment and also with the principles of the computer equipment used as specialized control units. Published sources are recommended for this purpose [12, 13, 14, 15].

7.2. Operating Capabilities of the Office

The quasielectronic AMTS equipment developed in the Soviet Union is characterized by the fact that sealed magnetically controlled contacts are used to switch the talk channel, and a specialized computer operating by a written program is used as the control unit. The maximum capacity of the AMTS KE office is about 8000 incoming and 8000 outgoing channels and lines. The output capacity of the computer permits up to 160,000 calls to be serviced in the PLH [peak load hour].

The basic operating characteristics of the office are analogous to those which are provided by the AMTS-4 and ARM-20 offices: namely, the possibility of transmission of facsimile and phototelegraphic messages and digital data in addition to the long-distance telephone calls, automatic switching from the direct to bypass paths, priority servicing of subscribers of individual categories, the use of cord or cordless type switching equipment for semi-automatic service, and so on. Program control, however, permits expansion of the operating capabilities of the office. In particular, subscribers of the ATS connected to the AMTS KE can set up automatic calls over the channels of the long distance and zone networks by dialing an abbreviated number for the called subscriber. This possibility will be used both by the quasielectronic ATS subscribers and the crossbar and ten-step ATS subscribers. On connection to the quasielectronic ATS, the abbreviated number is received and recalculated to the complete number at the ATS, and on connection to the crossbar or ten-step ATS the recalculation is done at the AMTS KE.

A characteristic feature of the AMTS KE equipment is introduction of line and control signal transmission systems for interaction with other AMTS KE over a common signal channel (OKS). In individual cases where this system is uneconomical, provision is made for the application of the single-frequency method of transmitting line signals on a frequency of 2600 hertz and the multi-frequency method of transmitting control signals by the "2 out of 6" code. The same signal system is provided also for interaction of the AMTS KE with the AMTS-4 and ARM-20 offices. For coupling to the AMTS-2 and AMTS-3 offices existing on the network, the AMTS KE equipment contains the devices required for the two-frequency line signal transmission system with decade transmission of the dialing pulses.

The AMTS KE equipment provides for interaction with the quasielectronic, crossbar and ten-step ATS. The trunks and recording trunks organized either on physical lines or by transmission system channels are used for coupling to the ATS, depending on the ATS-AMTS distances.

The signalling system used on the ZSL and SLM depends on the type of ATS. On interaction with the ATS KE as a rule provision is made for the organization of a common signalling channel (OKS). In individual cases when this system is uneconomical, the line signals will be transmitted depending on the type of line: over physical lines by direct current, over transmission system channels with segregated signal channel, on a frequency of 3800 hertz, on transmission system channels without segregated signal channel on a frequency of 2600 hertz. The method of transmitting the control signals over the ZSL is determined by the type of ATS or the local network junction: namely,

ATSKE are coupled to the AMTS KE with storage of the category and number of subscriber A at the ATS and subsequent output of all of the information to the AMTS KE by the multi-frequency "pulse packet" method; subscriber A can dial the number using a dial or key pulser;

The crossbar and ten-step ATS are coupled to the AMTS KE without storing the category and number of subscriber A at the ATS as follows: after subscriber A dials the prefix "8" connection is made to the AMTS; on the request signal coming to the AON from the AMTS, the ATS transmits the category and number of the calling subscriber by the multi-frequency "no-interval packet" method, and then after receiving the "AMTS answer" signal, the dialing pulses are transmitted by the decade method. On the physical lines the decade pulses are transmitted by direct current, on the transmission system channels with segregated signal channel, on 3800 hertz, and on the transmission system channels without segregated signal channel, on 2600 hertz.

For transmission of control signals over the SLM when coupling the AMTS KE to the quasielectronic and crossbar ATS, the multi-frequency "pulse shuttle" method is used, and for coupling to the ten-step ATS, the decade method.

In addition to controlling the process of setting up calls, the special control computer also performs the functions of automatic long-distance call charge computing and gathering of statistical data.

It is proposed that the equipment of the agency [PBX] quasielectronic ATS be used as the order-circuit ATS in the AMTS KE.

7.3. Structural Diagram and Composition of the Office Equipment

The office contains the following basic junctions and devices (Figure 7.1):

Line equipment which, in addition to the already known equipment includes new versions of outgoing and incoming IVK operating with the use of a common signal channel OKS-IVK for transmission system channels and IVK-2, IVK-4 for physical lines;

The switching system KS consisting of the BVL incoming line modules and the BIL outgoing line modules;

Switching system control units UUKS;

Group devices of the switching system (single-frequency and multi-frequency receivers and oscillators, acoustic signal sets, receiving and transmitting units, and recorded voice unit);

Identifiers (scanners) and distributors connected to the line equipment;

Central address unit TsAU;

Central distributor TsRU;

Peripheral processor PPr;

Central control unit TsUU consisting of two specialized control computers SUVM-1 and SUVM-2 operating synchronously and external input-output devices;

Monitoring and testing equipment KIA and the office service panel;

Signalling equipment over the common channel OKS;

Order-circuit ATS;

Cord or cordless switching equipment.

In order to provide uninterrupted operation of the office not only the central control units are redundant, but also peripheral units: PPr, TsAU, TsRU, UUKS, and so on.

The switching banks of the BVL and BIL modules are connected to all types of incoming and outgoing channels, ZSL and SLM, and also the group devices for receiving and transmitting line signals and control signals. Each BVL is connected to each BIL module by intermodular lines.

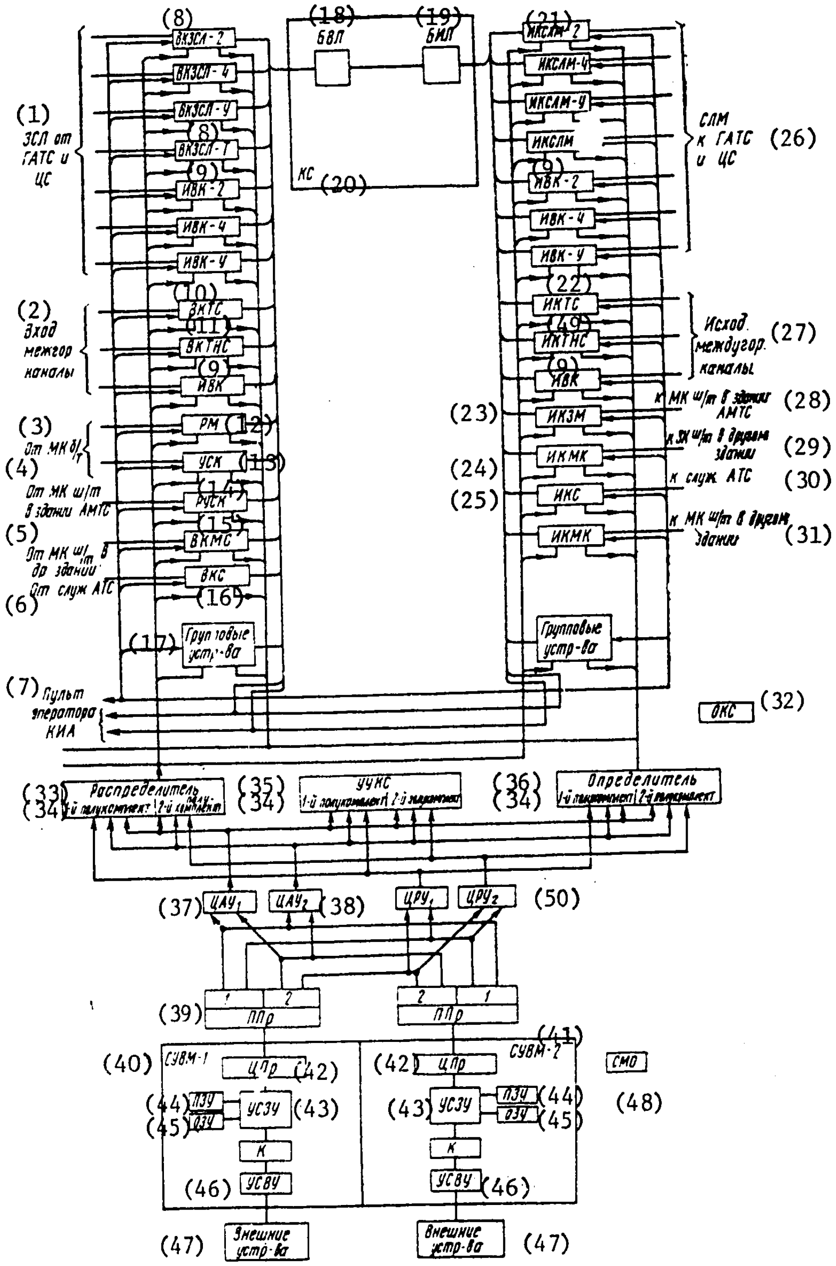

Figure 7.1. Simplified structural diagram of an AMTS KE
[see key on p 185]

[Key to Fig 7.1]:

1. ZSL from the GATS and TsS
2. Incoming long-distance channels
3. From the MK d/T
4. From the MK sh/t in the AMTS building
5. From the MK sh/t of another building
6. From the order-circuit ATS
7. KIA operator panel
8. VKZSL- ...
9. IVK ...
10. VKTS
11. VKTNS
12. RM
13. USK
14. RUSK
15. VKMS
16. VKS
17. Group units
18. BVL
19. BIL
20. KS
21. IKSLM ...
22. IKTS
23. IKZM
24. IKMK
25. IKS
26. SLM to the GATS and TsS
27. Outgoing long-distance channels
28. To the MK sh/t in the AMTS building
29. To the ZK sh/t in another building
30. To the order-circuit ATS
31. To the MK sh/t in another building
32. OKS
33. Distributor
34. First halfset/2nd halfset
35. UUKS
36. Identifier
37. TsAU$_1$
38. TsAU$_2$
39. PPr
40. SUVM-1
41. SUVM-2
42. TsPr
43. USZU
44. PZU
45. OZU
46. USVU
47. Peripheral devices
48. SMO
49. IKTNS
50. TsRU

The line equipment provides for interaction with all types of AMTS and ATS. The logical operations of processing the signals are performed by the control computer which has made it possible significantly to reduce the number of relays in the line equipment.

Each of the two SUVM includes the central processor, PPr, the permanent and ready-access memories PZU and OZU and also the channel equipment for coupling to the peripheral devices. The peripheral devices VU are used for connecting the operator to the SUVM and also for data storage. The peripheral devices include the punch tape input-output units, typewriter, various types of information storage elements and other devices.

For interaction of the TsUU with the switching system, the line equipment and other of the peripheral devices there are peripheral processors PPr, central address and distributing devices TsAU and TsRU and also distributors and identifiers. Each SUVM is connected to each of two peripheral processors.

An important component part of the computers is the software SMO which is in the form of a set of interconnected programs and data determining the sequence of operations performed by the SUVM in one situation or another during the process of setting up a call. Each SUVM has an output to the KIA and service panel of the PO office. In addition, the TsUU has a set of test instruments KIP and spare parts ZIP.

The control units of the switching system UUKS set up calls directly in the switching system based on information received from the SUVM. Each UUKS is attached to one BVL or BIL and is made up of two identical mutually redundant halfsets which, independently of each other, can set up calls in different switching groups.

The identifiers serve for periodic inspection of the condition of the incoming line systems and relaying of all changes occurring in the channels and lines to the peripheral processor.

The distributor performs the functions of servorelays of the line and group systems operating on instruction from the control computer.

7.4. Setting Up Calls

The process of setting up calls takes place under the control of the SUVM by the recorded program. Each type of automatic and semi-automatic connection over different types of channels and lines is made by the corresponding priorities for setting up calls. By priority we mean exact prescription of the order for performing the individual operations when setting up a call.

The algorithms for setting up various types of calls are translated into machine language, programmed and stored in the computer memory. Each algorithm for setting up one type of call or another is broken down into phases. With this structure of the algorithms and software, standardization of individual phases of the various types of calls is achieved. Consequently, defined phases in setting up the calls will have the same programs, which will permit economy of the most expensive part of the control computer -- the memory.

The following set of programs is stored in the SUVM memory:

Technological, providing for setting up various types of calls, including additional services;

Monitoring, providing for correctness of the operation of the equipment, correctness of transmission and reception of control signals;

Auxiliary, providing for the process of controlling the inclusion of the technological programs, the monitoring and diagnostic programs, and the data input-output programs;

Diagnostic, providing for determining the location of a failure in the various devices of the office.

Various types of memories are provided to store the programs in the AMTS KE equipment.

The process of setting up calls in general form takes place as follows. The calls coming from the city ATS, zone networks or long-distance offices are received by the office line equipment. However, there is no processing of the calls in the line equipment. If these are dc signals, they are relayed to the common office devices -- identifiers; if these are ac signals, they go to the corresponding frequency receivers for conversion to direct current. The group identifiers constantly test all the line equipment with a 10 millisecond cycle and relay all changes occurring in the lines and channels to the peripheral processor. The identifiers are passive devices that perform the functions of signal relays.

The mission of the peripheral processor is to record changes occurring in the lines. However, the peripheral processor does not determine the type of signal. Its purpose is establishment of the end of the signal or beginning of a new signal and transmission of data on changes to the SUVM.

The data about all lines and channels connected to the office are stored in the SUVM memory. On receiving information about changes from the peripheral processor, the SUVM determines the type of call, provides a search for a free intermediate line in the switching system to connect the required group unit. The control commands from the SUVM are transmitted via the peripheral processor, the central distributor, distributor or switching system control unit. The information about all calls in the office is stored in the SUVM. For example, after output by the SUVM of instructions to connect the office answer buzzer, the next step in setting up the call is reception of the number from the subscriber. Since three types of lines are entered in the SUVM memory, when obtaining the changes from the peripheral processor, the SUVM clearly outputs an instruction to connect the defined receiver. Here in the time of sending the office response signal, it determines the free receiver and free intermediate paths in the switching system for connecting the receiver so that reception of the number is provided for. After reception of the number the SUVM determines the routing code and provides a search for free intermediate lines for connecting the long-distance channel.

Inasmuch as data is stored in the SUVM memory on all routings and types of channels, the signalling system, the composition of the signal and the required devices for transmission and reception of the dialing signals and line signals are uniquely defined at the same time. Therefore by the given program the SUVM outputs instructions for transmission of a busy signal to the channel, receiving confirmation signals, output of the number dialing signals, receiving the subscriber answer signal and connecting the switching channel for two subscribers to talk. All of the commands, just as before, are relayed via the peripheral processor, TsAU, TsRU, distributors and identifiers of the UUKS. On receiving the "subscriber answer" signal, according to the program the SUVM begins to reckon the time for determining the length of call to compute the charges.

During the call the identifiers test the busy sets. If subscriber B hangs up his receiver, the ring-off signal arrives which is relayed by the identifier, and the peripheral processor provides information to the SUVM about the change that has occurred. On this instruction the SUVM stops the charge computing and starts the program which disconnects the subscribers.

If the SUVM does not find a free intermediate line, group device, channel or trunk during the search, on two or three unsuccessful attempts the subscriber is sent a "busy" signal. When searching for a free channel on the routing and in the absence of the latter an effort is made to find it on by-pass routings. If there are no free channels on the by-pass routings, then any call is put on hold if it is a tandem office or a call with priority is put on hold, and for an ordinary call a "busy" signal is sent to the subscriber if the office is an outgoing office.

When setting up calls cases of failures of the instruments, failures of individual office assemblies are possible. In the SUVM the so-called "timer" program is always operating. It regularly outputs time marks after defined intervals. Inasmuch as the SUVM operates in real time, all the programs (technological, monitoring, auxiliary and others) follow the call setting up process when processing calls by time marks. If for any reason the signal lasts longer than it is set to or a new signal to request a program does not arrive for a defined time or a confirmation signal is not received, in all of these cases the SUVM with the help of the monitoring program and the technological programs, enters the information about these events in the computer memory (first in the ready-access memory and then on the magnetic tape NML).

In all cases of failure to set up a call, as a rule, the subscriber is sent a "busy" signal or an effort is made to set up a new call. The monitor programs have a defined level of priority in the office and call the KIA for transmission of data on stored failures. Then by a defined algorithm the KIA jointly with the SUVM begins to check out the failed assemblies.

The charge computing and load data are stored on magnetic tape and are then transmitted to the computer center for processing. The transmission to the computer center can be accomplished by transporting the magnetic tape or it can take place over the data transmission channels.

7.5. Brief Description of Switching System

As was stated above, for talk channel switching, sealed magnetically controlled contacts, so-called reed relays are used. In general form the reed relay is an electromagnetic coil (solenoid), inside which there are several soldered glass tubes with metallic magnetically controlled contact plates made of magnetically soft material. These glass tubes with metal contacts are called sealed contacts or hercons for short [12]. For creation of a closed magnetic circuit in the relay, a metal yoke is provided.

The operating principle of the reed relay consists in the following. On transmission of a direct current through the relay winding, a magnetic field with a defined magnetic flux is created. The main part of the magnetic flux is closed through the contact plates and the yoke. Part of the flux is dissipated. Under the effect of the magnetic flux the plates are attracted to each other, and the contact is closed.

The contact surfaces of the hercons are closed by noble metal -- gold, silver and rhodium. This insures high reliability and long service life. The location of the metal contact in a sealed glass bulb creates reliable protection of the contacts from the influence of the external environment -- dust and corrosion -- which are a basic source of damage to the relays and MKS with unsealed contacts.

On the whole, the reed relay is distinguished by high reliability, small, stable contact resistance, long service life with small loads, short response and release time, low control power and simple structural design.

At the present time various types of hercons are being produced. Hercons that operate on closure (type A), on opening (type B) and switching (type C) are known. Hercons can be both inside the coil and outside it.

The "ferride" type hercons are used for AMTS KE. A ferride is a reed relay in which the magnetic circuit made of magnetic (ferrite) material with rectangular hysteresis loop is introduced. The ferride is distinguished from an ordinary reed relay by the presence of magnetic blocking and a short inclusion pulse duration (microseconds). On transmission of a dc pulse of sufficient magnitude through the winding, the contact plates are closed, and after the end of the pulse, they remain in this state as a result of residual magnetization of the core. In order to open the plate, a current pulse of opposite polarity is passed through the winding so as to remove the residual magnetization.

For the construction of a switching circuit, the ferrides are placed on a mounting board in horizontal and vertical rows, forming a rectangular matrix called the switching circuit. The contacts are joined so as to form a coordinate grid. The ferride is installed at the point of possible contact (intersection) of a horizontal and vertical; therefore it is provisionally called the intersection point or switching point.

In a switching circuit, in contrast to a finder, both the horizontal and vertical can be both input and output; therefore the names "input" and "output" in the given case are of a purely provisional nature. In addition, in contrast to the MKS, in the switching circuit the horizontal and vertical are equivalent, for the response of only one relay at the switching point is sufficient to connect the corresponding vertical to one of the horizontals.

The relay at the switching points of a switching circuit is connected by a control unit. For inclusion of the ferride, the inclusion current pulse is sent. Inasmuch as a ferride has magnetic blocking, no current is required to maintain it in the operating state. Each ferride contains two windings forming a differential system. On transmission of a current through both windings the ferride responds, and on transmission of a current pulse through one winding the ferride does not respond, and if it was in the working state, it is switched off.

When constructing the switching circuit the first windings of the ferrides forming the horizontal are connected in series. Analogously, two windings of the ferrides forming verticals are connected in series. In order to include the ferride at the switching point, the current is fed to one horizontal and one vertical. In this case the ferride which is at the switching point responds. At the same time the current passes through one of the two windings of all ferrides located in the same horizontals and verticals and switches off the indicated ferrides if they were on. Thus, there is no necessity for completing a connection to release the switching point. The opening of the connection is automatic as soon as the connection is set up at any point in the same row.

The four-wire 8×8 input/output matrix is selected as the basic switching unit. The switching group KG (Figure 7.2), on the basis of which the group formation circuits are constructed, consists of eight matrices of link A, and eight matrices of link B, that is, it has a capacity of 64×64 input/outputs. The matrices of link A are connected to the matrices of link B by intermediate lines. The two-link switching block is made up of 16 switching groups and, consequently, has a capacity of 1024×1024 input/outputs. At the initial point in time when there are no other calls, any input is accessible to any output, and the circuit is fully accessible. If calls have been set up in the block, then it can turn out that there are no free intermediate lines for setting up calls from a defined busy input to a defined free output, that is, internal blocking occurs. Consequently, the two-link block is a circuit with internal blocking. In order to decrease the internal blocking, four-link blocks are used.

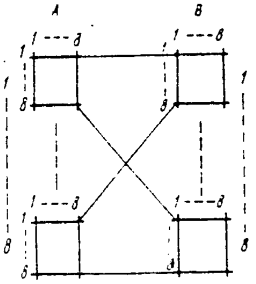

Figure 7.2. Group formation circuit of a switching module with a capacity of 64×2 input/outputs

The four-link block is formed by connecting two-link blocks to each other by the "each to each" principle. The group formation diagram of the indicated block is illustrated in Figure 7.3.

As is known, the structure of the switching system must provide for servicing a given load with required quality with a minimum number of switching points. As a result of calculation and analysis of various versions of the group formation systems for the AMTS KE, two types of systems were selected depending on the capacity of the office: six-link for offices with a capacity to 4000×2 channels and lines and eight-link for offices with a capacity of more than 4000×2 channels and lines.

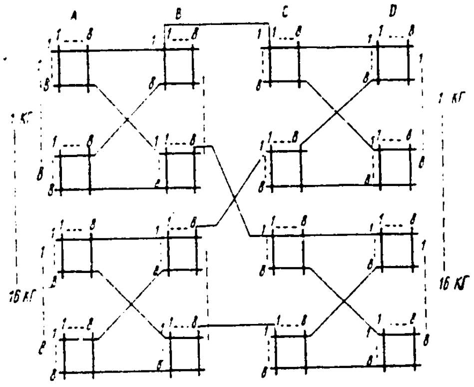

Figure 7.3. Group formation diagram of a four-link module with a capacity of 1024×2 input/outputs

In the case of the six-link diagram of the switching system the outgoing line module BIL is selected four-link, and the incoming line module BVL, two-link: for the eight-link diagram BIL and BVL are four-link. Each BVL is connected to each BIL by intermodule lines.

7.6. OKS Common Channel Signal System

The OKS signal system is characterized by the fact that line and control signals are transmitted over the signal channel common to some number of talk channels (audio signals are transmitted over talk channels).

The OKS signal system can operate in two modes: connected and unconnected. In the connected operating mode the signals are transmitted between two offices which are terminal stations for the group of talk channels and for the OKS. In the unconnected operating mode the signals are transmitted over two or more series-connected OKS, the transmission routes of which differ from the transmission route of the serviced talk channels. Here the signals are processed and transmitted through one or several intermediate offices. The connected method of operation is economically justified for large groups of channels and trunks (more than 60).

The common signal channel can be organized on the basis of standard voice-frequency channels. The OKS telephone signals are transmitted by the method of series data transmission by sections where the transmission of the signals from one section to the next is realized only after processing of them.

The information transmitted over the channel is divided into information modules of 69 bits each. The data transmission rate in the channel is 1200 and 2400 baud.

7.7. Long-Distance Call Charge Computing

In the ATMS KE using specialized control computers SUVM for control, the functions of automatic long-distance call charge computing are left to the SUVM. Performance of the charge computing function by a recorded program insures relative freedom of alteration of the charge computing algorithm in case of providing the subscribers with additional forms of services or changing the conditions and the process for reckoning the charges and sending out bills at the computer center VTs.

The set of programs used for the SUVM to perform the operations of gathering, primary processing and transmission of the charge data to the computer center and also the equipment entering into the AMTS KE and performing the data gathering function and transmission of the data to the computer center make up the charge computing subsystem PUS.

The following information must be gathered and transmitted to the computer center to send the subscriber a bill for the AMTS KE:

The category of the calling subscriber;

The number of the calling and called subscribers;

Length of call;

Time and date of completion of call.

For determination of current time and also the date of the call a time-calendar sensor DVK has been programmed in the ready-access memory OZU of the SUVM. Inasmuch as data files are created as a rule for transmission to the computer center, the time and date of completion of the call do not accompany every call, but a file of calls. When forming the file we begin with the fact that it is expedient to include data on 30 to 90 calls in one file.

The charge computing data is transmitted from the AMTS KE to the computer center automatically via the data transmission equipment APD. Magnetic tape storage elements NML are used as the buffered storage. Their function includes smoothing of the peaks of the output data in the PLH and storage of data in the periods when data transmission to the computer center cannot be accomplished for some reason. Thus, the primary document for settlements with the subscribers is a magnetic tape, and it must be stored for some time for possible analysis of subscriber claims.

The transmission of data to the computer center via the APD is expedient for significant distances between the AMTS KE and the computer center. If the computer center is located near the AMTS KE (possibly in the same building), it is more efficient to transport the magnetic tape to the computer center with subsequent direct input of the data from the tape to the computer center computers.

Data transmission via the APD to the computer center is realized over a physical pair or over an attached telephone channel with a speed of 2400 baud.

For immediate notification of hospital administrations about the cost of long-distance telephone calls from telephones installed in the hospital, the following method of processing the call data is used. With respect to the hospital subscriber category the call data are output to a special zone of the ready-access memory where a hospital call file is formed. This file is not output on magnetic tape, but is transmitted directly to the computer center via the APD.

7.8. Telephone Load Computing and Service Quality Control System

The telephone load computing and service quality control system at the AMTS KE is designed for constant monitoring and display of the service quality at the office and on the zone network, for periodic calculation of the data on the basis of which optimal development and future planning of the telephone network, redistribution of the maintained communication means at the expense of available reserves and also statistical monitoring of the equipment are realized.

The accounting and control system has software and hardware. The software is designed for gathering, primary processing and output of the initial data, and the hardware, for ready display, intermediate storage of the data and transmission of it to the computer center for processing.

All of the indices are divided into service quality indices and load indices. The service quality indices are divided into operative and statistical, and the load indices are categorized as statistical. The initial data for calculating the operative and statistical load indices (percentage losses on the connecting paths, percentage blocking of devices and lines, the number of attempts for one call, the average busy time of the devices and lines, and so on) are gathered in the SUVM where primary processing takes place, and then they are transmitted to the computer center for processing. The results of the primary processing of the operative data are displayed and recorded by the hardware. The operative indices are recorded to obtain statistical data which is accumulated for a defined interval, after which it is transmitted to the computer center and again processed by a special program. The secondary processing results are printed out in convenient for for direct reading. In addition, for each change in quality of servicing calls on the last-choice paths, the monitor information is transmitted in coded form to the control stations for display.

The initial data for determining the statistical service quality and load indices are considered periodically on request of the operator. The statistical data is program copied from the external memory of the SUVM on the hardware in a form convenient for direct input to the computer center computers or it is transmitted to the computer center by means of the APD.

7.9. Order-Circuit ATS

The order-circuit ATS is designed to organized intraoffice and interoffice service:

Between operative subscribers of the long-distance telephone offices of the USSR;

Telephone operators of the MTS with information services of the GTS and talk stations of their own and other cities;

Telephone operators of the MTA with segregated direct subscriber lines;

Workers in the various AMTS (MTS) services.

The order-circuit ATS provides for the possibility of four-wire connection of remote control units of the voice-frequency channel quality control equipment.

7.10. Monitoring and Testing Equipment KIA

The presence of a control computer permits automation of the monitoring of the operation of the office equipment with the application of programmed monitoring devices. The servicing of each call is participated in by a large number of devices of different stages of the AMTS KE. Failure can occur in any of them or in the coupling (the buss equipment, repeating and receiving systems, and so on). The search for the failed equipment in a large volume of suspected equipment is complicated and lengthy. Therefore in the AMTS KE the monitoring system is set up in such a way that each equipment stage has its own closed, quite complete monitoring system. When detecting a failure in one stage, the devices of other stages are not suspected.

From the point of view of the monitoring system, the office equipment is divided into three stages:

1) The set of specialized control computers, including central and peripheral processors, storage units, external input-output units;

2) Centralized and junction units which include the central address and distribution units, the switching system control units, distributors, identifiers and also buss equipment connecting the enumerated devices;

3) The switching system, group devices and individual line systems.

For detection of failures in the central and peripheral control units basically continuous monitoring by built-in equipment is used. The presence of redundant control units makes it possible to switch to units in good working order after detecting a failure, and to determine the location of the failure with considerable accuracy.

The system for monitoring the central and junction equipment is made up of special hardware and software which provide for determination of the location of the failure and switching of the corresponding unit to reserve.

Failures in group and individual devices, channels and lines of the AMTS KE are discovered by the special set of organizational measures and hardware. The basic hardware of the group and individual equipment monitoring system includes the following:

A segregated set of monitoring and testing equipment at the office KIA located in the switching shop;

The set of equipment for automated testing of the standard channels AISK located in the line equipment shop LATs.

In addition to the basic hardware at the AMTS KE the following hardware is also provided:

On each line and group equipment rack there is one special program control unit for the switching relays each for connection of individual devices and KIA (the UP connection unit) on command from the central control unit;

On each line equipment rack (or group of racks) there is a level matching system (low-frequency amplifier);

On each rack (or group of racks) of the incoming line systems there is one outgoing line system designed to operate via the ZSL, SLM or the long-distance channel with given form of incoming systems;

On each rack (or group of racks) of the outgoing line systems there is one incoming line system each designed to operate via the ZSL, SLM or long-distance channel with given type of line equipment;

In each line system the special program-controlled relays for connecting the line side of the equipment via the switching relay system to the inputs and outputs of the KIA;

On each rack (or group of racks) of line equipment special monitor frequency generators (1800 hertz) and a receiver of this frequency to check the correctness of setting up a call through the switching system;

In each line system (outgoing and incoming) a special additional wire for sending the signal characterizing the state of the system, to the LATs and also the blocking signals of the system from the LATs.

The basic operating conditions of the KIA system are automatic on instruction from the TsUU.

For diagnostic and preventive checks of equipment taken from the work places the KIA operates in a semi-automatic mode, and in some cases, in the manual control mode. Manual and semi-automatic control is realized from the KIA diagnostic stand panel.

The basic operating conditions of the AISK equipment designed for monitoring and checking the standard voice frequency channels and trunks are semi-automatic, by request. The request for a check, measurement or repair of channels can come from the AMTS KE operator, from the operators of adjacent AMTS, UAK, ZTU and the dispatchers of the control system for the primary network of voice-frequency channels, by user request. The reception of a request to check, measure and repair the channels and lines, document recording of the contents of the request and control of the monitoring and measuring equipment AISK are all realized at the channel engineer work places -- the panels of the channel engineer bench STK.

7.11. Initial Principles for Calculating AMTS KE Equipment

The number of channels and lines subject to connection to the switching system of the AMTS KE is determined from materials corresponding to the master plans for the development of the long-distance, intrazonal and city telephone networks (analogously to other AMTS).

The number of group systems and transceiving units is calculated beginning with the number of calls which these devices must service and the average time they are busy servicing when called. The number of calls is calculated by the same procedure as for the AMTS-4 and the ARM-20. Preliminary data on the average busy time of the group devices (in seconds) are presented below:

Audio signal system KAS:	
call sending monitor	$t_{CSM}=9$
recorded voice	$t_{rec.voice}=15$
PPU-1 transceiving equipment:	
information reception from the AON	$t_{AON}=0.8$
pulse packet information reception from the single-frequency signal system channel	$t_{pulse\ packet}=1.4$
PPU-2 transceivers:	
pulse packet information transmission to the single-frequency signal system channel	$t_{pulse\ packet}=1.4$
information transmission over the SLM to the crossbar ATS by the "pulse shuttle" method	$t_{pulse\ shuttle}=3.7$
Single-frequency signals transmitter for operating in the mode with dialing of one's own number POS:	
monitor frequency transmission	$t_{monitor\ frequency}=2$
decade number transmission over the SLM	$t_{dec}=7$
Receiver PU:	
monitor frequency reception	$t_{rec.m.f}=2$

By the magnitude of the load on each type of indicated devices the number of devices is determined using the erlang tables with loss norm of P=0.001.

The eight-link switching system with a capacity of 1024×2 channels and lines combined with the BVL and BIL control units and two intermediate panel sections is a module by means of which the office capacity is built up. The channels and lines and also the group devices are distributed uniformly among all the office modules. This permits corresponding determination of the number of modules.

The load on a 1024 channel and line switching unit should not exceed 512 erlangs. This must be considered when distributing the channels and lines by blocks. An example of line and load distribution for the blocks of one module is presented in Table 7.1.

Table 7.1

Name of block	Name of lines and systems	No of lines	Load, erlangs
BVL	Channels and lines	750	441
	Group systems and transceivers	40	27
	Test lines	32	10
	Reserve	202	34
	Total	1024	512
BIL	Channels and lines	655	439
	Group systems and transceivers	41	30
	Test lines	32	10
	Reserve	296	33
	Total	1024	512

7.12. Structural Design of AMTS KE Equipment and Its Arrangement

The structural characteristics of the AMTS KE equipment consists in the fact that it is made up of individual structural elements, which are assembled at the installation location. The primary structural element is the standard replacement element TEZ equipped with 88 spring plugs. The standard replacement element is a line system or any other element of the office equipment.

The TEZ elements are fastened in the horizontal connection frames GRS which are also standard structural assemblies. The horizontal frames with TEZ are assembled into sections (racks) of standardized prefabricated design. The connections between the different GRS and sections are made by cable jumpers with 88-contact spring plugs.

The alarm panels (PS) are installed in the central part of the racks.

The peripheral control units are connected to the central units by means of busses made of TPV type cables. For distribution of the busses by routings, the TsRU central distributor is used.

The supporting structure is made up of vertical supporting frames which are fastened together at the top and bottom. Each of these frames contains guides for nine GRS which are installed with 304 mm spacing vertically. Above the frames is a cable chute connecting the supporting frames and baysof sections (racks) to each other. The cable chute has main spans between every two sections which permit branching of the cables to the required section.

For the construction of the electronic devices of the computer, the modular design is used with breakdown into five basic structural elements:

Integrated circuitry IC containing the simplest logical elements;

A card TEZ (standard replacement element) including 24 integrated circuits;

The panel on which the 40 standard replacement elements are placed;

The frame on which six panels are installed;

A bay containing three frames.

The logical elements have a plastic case with pin type terminals. A two-way printed circuit board is used for the TEZ, on which there are 48 contact plugs for connection to the panel. Forty plugs are installed on the panel for TEZ and eight plugs for external connections.

The structural base of a frame is a welded structural frame made of special aluminum section. Cooling fans are installed for each frame.

The interpanel wiring is done basically by twisted wire MGDO 2×0.2 and MGDPO and also coaxial cables of type IKM-2 and RK-50. The plug board type plugs are also installed on the frames.

The standard bay contains three frames, of which the middle is stationary and the two edge ones turn. The structural base of the standard bay is a metal welded frame on which panels are mounted on the ends and doors that open are installed on the sides.

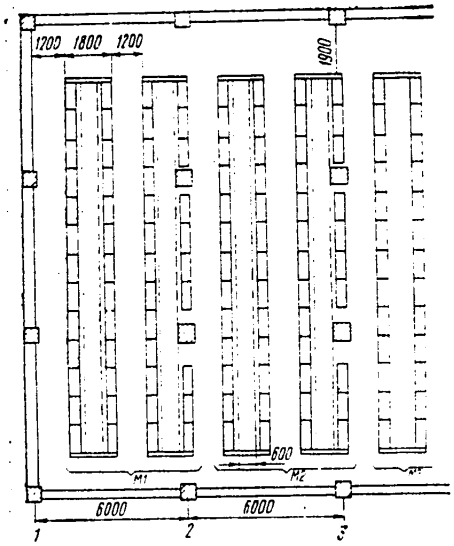

Figure 7.4. Diagram of the arrangement of the equipment bays in the AMTS KE switch room

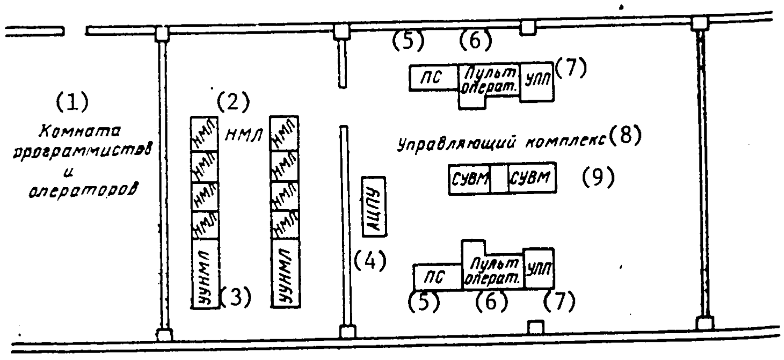

Figure 7.5. Diagram of the placement of the equipment rows in the AMTS KE machine room

Key:

1. Programmers and operators room
2. NML = magnetic tape storage
3. UUNML = magnetic tape controllers
4. AtsPU
5. PS
6. Operator panel
7. UPP
8. Control unit
9. SUVM

When compiling the layout for the equipment it is necessary to consider that the peripheral processors are installed jointly with the SUVM equipment. The central address unit can be removed from the peripheral processor by no more than 150 to 200 meters. The operator room, the SUVM room and the room for the input-output devices UVV must be located territorially side-by-side. A passage has to be provided between the operator room and the UVV room.

In the switch rooms the equipment is arranged by modules. Each module contains one BVL and one BIL, the calculated number of line equipment racks and group units. The equipment module is placed in adjacent bays.

The diagrams of the arrangement of the equipment bays in the switch room are presented in Figure 7.4, and in the machine room, in Figure 7.5.

The address and information busses must be arranged in separate packets (from the remaining cables) in special shielded chutes or in a space protected from inductions.

The structural design of the cordless type switchboard equipment is analogous to that used in the AMTS-4.

7.13. Electric Power Supply for the AMTS KE

Guaranteed -60 and -24 volt direct current, guaranteed three-phase ac industrial frequency 380/220 volt current, unguaranteed three-phase 380/220 volt ac current and unguaranteed single-phase 220 volt industrial-frequency ac current are required to power the AMTS KE equipment.

The different ac voltages (except -24 volts) required to operate the electronic devices are obtained by conversion of the -60 volt voltage by special converters.

CHAPTER 8. REQUIREMENTS ON AMTS AND UAK BUILDINGS AND FACILITIES

8.1. General Remarks

As is obvious from the preceding chapters, modern AMTS and UAK are complex sets of equipment consisting of a significant number of different high-sensitivity and high-precision elements. In order to guarantee reliable operation of this equipment with the required service quality and also to insure the required conditions for normal activity of the service personnel, the buildings and facilities in which the AMTS and UAK are located must satisfy defined requirements both with respect to size and structural specifications and with respect to climatic parameters of the facilities. A brief discussion is presented of the basic initial principles which must be followed when designing AMTS and UAK buildings, recommendations for determining the initial data for designing these buildings and certain other requirements on them. A detailed list of all the structural requirements, ventilation and other parameters is included in the Technological Design Norms, [3, 16].

8.2. Initial Data for Designing AMTS and UAK Buildings

Buildings designed for AMTS and UAK must be calculated for a high degree of fireproofness (no less than second degree), and in areas with increased seismicity, for the corresponding earthquake proofness.

The volume of the building, its dimensions and the number of stories are determined depending on the type and quantity of process equipment which must be installed in the building and also the configuration and sizes of the site for building the building.

The dimensions of the switch rooms and, correspondingly, the remaining shops and services are designed for the possibility of 15 to 20 years of development of the office from the time it is put into operation, that is, for the prospective size of the office. Exact dimensions of these areas can be determined only after calculating the amount of equipment and developing the layout plans for it. However, considering that the volume of the designed building is calculated for a significant development reserve, the sizes of the areas can be determined in consolidated manner, beginning with previously calculated average values of the areas of the switch and switchboard rooms per unit capacity of offices of various types. For AMTS-4 and ARM-20 the area of the switch room is determined reckoning 0.2 m^2 for one point of the switching bank. For AMTS KE the switch room areas can be determined approximately reckoning 0.05 m^2 for one point of the switching bank. Here the office control units must be located in a separate room about 200 m^2 in area. In addition, for various auxiliary technical services a number of facilities with a total area of 300 to 400 m^2 are required.

Multistory levels under the machine rooms must be designed for a load of 1000 kg/m^2.

The nomenclature of the facilities and services of the AMTS and UAK and their characteristics are indicated in the corresponding technological design norms [3, 16]. For AMTS KE, however, in view of novelty, the list of technical facilities and services is presented here. The list includes the following: the special computer equipment service SUVM, including the input-output devices;

The switch room facility (switching system, with control units, line and group systems, address and distributing devices);

The operating and maintenance service (KIA);

The data preparation service (punches and other equipment);

The paper storage and facilities for cutting paper;

Magnetic and paper tape archives;

Technical documents archives;

Facility for storing ZIP;

Programmers' room;

Operators' room;

Measurement and repair workshop (the basic operations include determining failed TEZ, replacement of the TEZ with operating TEZ, automatic determination of the location of a failure);

Mechanical workshop;

Electric power supply room;

Office chief's room;

Technical personnel room;

Lounge.

The equipment in the switch rooms must be arranged calculating that the free area for subsequent expansion of the office can be temporarily isolated and used by the maintenance service of the office as it sees fit.

The mutual arrangement of the technical facilities must provide for minimum length of the office cable, convenience of technical servicing of the equipment and also minimum requirements on movement of large numbers of people between floors. Beginning with this fact, the switchboard rooms are usually placed no higher up than second floor, the line and equipment shops with their services on the third floor, and the switch rooms with their services higher up. The KIA, technical monitoring and servicing rooms must be placed beside the switch rooms (or in direct proximity to them) for the possibility of providing constant monitoring of the operation of the equipment.

8.3. Climatic Parameters in the Technical Facilities

The equipment with which the switching shops of the AMTS and UAK are equipped contains complex automatic devices for the electromechanical, electronic and other systems. For normal operation of these devices with sufficient operating reliability in the facilities where the equipment is installed, defined climatic conditions must be created. These conditions are determined by the temperature, relative humidity and atmospheric pressure parameters which must be kept constant within the following limits:

Temperature from +18 to +28°C (for the AMTS KE from +19 to +21°C);

Relative humidity from 50 to 70% (for AMTS KE 40-60);

Atmospheric pressure from 720 to 780 mm Hg.

The indicated parameters must be used in the calculation when designing the heating, ventilation and air conditioning equipment.

For reliable operation of the office equipment, maximum insulation from outside air, that is, protection against dust penetration, blowing, direct sunlight, and so on are required. Beginning with this fact, the window openings in the switch rooms must be kept to a minimum in number and size necessary only to maintain the health of the service personnel. Special measures must be taken to prevent dust penetration -- exclusion of opening of the windows and doors, finishing the facilities in materials that exclude dust generation or accumulation, and so on.

In the switchboard rooms and the punch rooms of the AMTS provision must be made for sound-absorbing covering of the walls and ceilings to reduce the noise level as much as possible (in accordance with the norms).

Only incombustible materials that do not release sulfur, chlorine or fluorine compound vapor should be used to finish the facilities of the switch rooms and other technical services.

In the facilities where a significant number of service personnel work constantly (switchboard rooms, outfitting and adjustment workshops, and so on), natural lighting must be provided. In the switch rooms where the technical personnel spend only brief amounts of time (only when eliminating failures), artificial lighting is provided insuring the required level of illumination.

When designing buildings for the AMTS KE, increased requirements are imposed on both the climatic conditions and the fireproofing in the technical facilities. These requirements are listed in the technological design norms [3, 16].

In order to bring in the line cables from the entrance chamber and power cables from the power supply station to the process facilities on the upper floors of the building it is necessary to provide vertical shafts separated from the remaining facilities by a fireproof bulkhead and equipped with fireproof doors. The construction of the floor in the switchboard room and other technical facilities must be such that it provides for the possibility of installing channels under the floor for laying cables to the equipment.

When designing buildings for AMTS and UAK, analogous requirements on the LATs facilities and also specific requirements on the electric power supply station facilities are taken into account. For determination of the sizes of the facilities required to install the electric power supply station equipment, the total consumption of intake electric power to feed the office equipment is first determined.

In the AMTS and the UAK buildings, in addition to the technical services, facilities must be provided for the auxiliary production and administrative and general services. A detailed list of these facilities and the floor space required for them are indicated in the corresponding norms [3, 16].

8.4. Number of Service Personnel

For calculation of the volume of sanitary engineering facilities and general services of the designed AMTS and UAK buildings it is first necessary to determine the total number of personnel servicing the office and also the number of the production staff for the maximum and adjacent shift. In addition, the number of service personnel must be known with distribution with respect to qualifications also to calculate the operating expenditures when determining the cost effectiveness of the office.

The number of technical personnel of the AMTS and UAK switching shops depends to a significant degree on the system of technical maintenance of the equipment. Until recently the preventive technical maintenance system predominated at the long-distance telephone offices. As automatic switching equipment developed, the possibility arose for using automatic monitoring and testing equipment to convert to the more advanced statistical monitoring (or monitoring and correcting) method for which a significantly smaller number of service personnel are required. The essence of this method is that two types of monitoring are performed at the AMTS: 1) continuous (using the office alarm system) and 2) as necessary (using the monitoring and testing equipment). The continuous monitoring units send signals out when the equipment has gone beyond the limits of the established norms. The monitoring and testing equipment provides for monitoring the operating quality of the office and testing the office equipment for correspondence to the established requirements.

The statistical monitoring method completely replaces preventive maintenance only in the new types of offices -- mechanoelectronic and quasielectronic. For crossbar offices, in particular, AMTS-2 and AMTS-3, it can only be partially used, for these offices do not have the necessary monitoring-recording and other devices available to them. At the same time the presence in these offices of a significant amount of automatic monitoring and testing equipment significantly facilitates the work of the technical personnel with respect to servicing the office, which leads to a relative decrease in the number of personnel.

For calculation of the number of service personnel of the AMTS and UAK switching shops, the Giprosvyaz' Institute has developed temporary calculation normatives that determine the consolidated average number of basic technical personnel, the engineering and technical supervisory personnel and telephone operators for the different types of AMTS.

The normatives for the number of technical personnel are reckoned per unit capacity of the office. As a unit capacity the following are taken:

One zone service line or channel -- for the AMTS-2 and AMTS-3;

One switching bank point -- for the ARM-20, AMTS-4, AMTS KE;

One long-distance channel (semi-automatic or manual service) connected to the cord type switchboard equipment;

One semi-automatic service channel -- for cordless type switchboards.

When developing the average number of technical personnel, basically data were used on the expenditures of time to service a unit of equipment in a month (in man-hours). Racks of all varieties and the switchboard position were taken as equipment units. The conversion of the total expenditures of time on servicing each unit of equipment (man-hours per month) to the number of personnel was made calculating a 7-hour working day, which corresponds to 174 hours per month per worker.

The number of telephone operators is determined by the output norms established by the Communications Ministry. The maximum shift is 50%, and the adjacent shift, 60% of the total number of technical personnel. The number of telephone operators in the maximum shift is equal to the number of switchboard positions.

For determination of the volume of sanitary engineering equipment and general services of the AMTS (UAK) which depend on the number of personnel, the calculations must be performed for the future capacity of the office for which the size of the building is designed. Here the total number of personnel and also the size of the maximum and adjacent shifts are determined.

For the performance of specific calculations of the number of service personnel for the designed AMTS (UAK) it is necessary to refer to the Giprosvyaz' Institute normative data.

CHAPTER 9. CABLE CONNECTIONS AT THE AMTS AND UAK

All the office equipment elements are connected to each other by office cables that provide for the layout of the office. Depending on the functions performed by the individual devices, the office wiring is also divided up by functions: line, power supply, signals, frequency, and so on. The types of cables used are determined by the corresponding All-Union State Standards in effect when the office is designed.

In recent years basically office cables in polyvinylchloride sheathing type TSV with the following capacity gradations are used for line wiring: 5×3, 10×2, 10×3, 20×2, 20×3. For power supply wiring aluminum busses ASh 20×5 and 15×3, power cables and wires with aluminum cores and rubber insulation ANRG 1×6, 1×10, 1×25, 1×35, 1×50, 1×70, 2×70; APR 1×4, 1×6, 1×10, 1×16, 1×25; AVRG 1×6 are used. For the signal wiring, the MEDShL 1×0.2 and 1×0.5 wiring is used, and for frequency wiring, shielded cables RVShE 1×2 and 5×2. For cross connections on the intermediate panels, the PKSV 2×0.5 and 3×0.5 cross-connection wire is used.

For individual types of equipment, considering the specific nature of the operation of the system, special requirements are imposed on the wiring. Thus, for example, in the AMTS-2 and AMTS-3 the wires connecting the electromagnets of the punches to the UKP racks must be shielded, copper, 0.5-0.75 mm^2 in cross section, and the resistance, no more than 1.0 ohm.

The cables are laid in the switch rooms in overhead boxing. In the punch facilities, the technical service rooms and other facilities are laid in ducts under the floor. It is expedient to feed the cable from the rack equipment to the switchboard bays through openings in the floor under the entrance chambers of the switchboard bays.

The cable connections between the different elements of the AMTS (UAK) equipment are made on the basis of the theoretical and functional diagrams of the office equipment which determine the purpose and number of the wires connecting each equipment element to all others within the office.

In each segment of the office diagram the total number of connecting wires is determined, which then are grouped into standard-capacity cables. This operation is usually performed by putting together cable circuit diagrams separately for each type of equipment or for a functional assembly. The compilation of such diagrams for the entire office is complicated and inconvenient as a result of the large number of varieties of AMTS equipment.

The cable circuit diagrams contain the following information:

The address of the connection (the name of the equipment on both ends);

The purpose and number of connecting wires;

The number of cables, their type and capacity.

For calculating a large number of cables of each variety a cable table is compiled in which the total list of laid cables is presented with indication of the laying sections, the points at which both ends are connected and the lengths of each piece of cable (or the average lengths of the pieces of cable in a group of like equipment).

Simultaneously with compiling the cable circuit diagrams and the cable tables, cable circuit diagrams are developed for the input terminals of the equipment and the frames of the switching panels. These diagrams permit selection of the most economical types of cable for each laying section.

During installation of the offices, first the cable table is used, on the basis of which the pieces of cable of the corresponding length are cut, and they are laid in all sections of the station. Then, using the cable circuit diagrams, the ends of the cables are fanned out, and the ends of the cable cores are connected to the corresponding terminals of the frames on the racks, switchboards or switching panels.

For compilation of the cable tables and. the circuit diagrams for connecting the cables to the equipment, it is necessary to use standard materials developed by the Giprosvyaz' Institute for each type of AMTS.

APPENDIX 1.

Long-Distance Area Codes for the Zone Telephone Networks within the USSR

Republic, kray, oblast, city	ABC Code	Republic, kray, oblast, city	ABC Code
Abkhazskaya	881	Kalmykskaya [Kalmyk]	847
Adzharskaya	882	Kaluzhskaya [Kaluga]	084
Adygeyskaya	877	Kamchatskaya [Kamchatka]	415
Azerbaydzhanskaya [Azerbaydzhan]	892	Karagandinskaya [Karaganda]	321
Aktyubinskaya [Aktyuba]	313	Karakalpakskaya [Karakalpa	361
Alma-Atinskaya [Alma-Ata]	327	Karachayevo-Cherkesskaya	878
Altayskaya [Altay]	385	Karel'skaya [Karelian]	814
Amurskaya [Amur]	416	Kashka-Dar'inskaya [Kashka-Dar'ya]	375
Andizhanskaya [Andizhan]	374	Kzyl-Ordinskaya [Kzyl-Orda]	324
Armyanskaya [Armenian]]	885,886	Kemerovskaya [Kemerovo]	328
Arkhangel'skaya [Arkhangel'sk]	818,819	Kievskaya [Kiev]	044
Astrakhanskaya [Astrakhan]	851	Kirovogradskaya [Kirovograd]	052
Ashkhabadskaya [Ashkhabad]	363	Kirovskaya [Kirov]	833
Bashkirskaya [Bashkiria]	347,348	Kislovodsk	868
Belgorodskaya [Belgorod]	072	Kokchetavskaya	316
Brestskaya [Brest]	016	Kokand	434
Bryanskaya [Bryansk]	083	Komi	821
Buryatskaya [Buryat]	301	Kostromskaya [Kostroma]	094
Bukharskaya [Bukhara]	365	Krasnovodskaya [Krasnovod]	432
Vinnitskaya [Vinnitsa]	043	Krasnodarskaya [Krasnodar]	861
Vitebskaya [Vitebsk]	021	Krasnoyarskaya [Krasnoyarsk]	391
Vladimirskaya [Vladimir]	092	Krymskaya [Crimean]	065
Volgogradskaya [Volgograd]	844	Kuybyshevskaya [Kuybyshev]	846
Vologodskaya [Vologda]	817	Kulyabskaya [Kulyab]	431
Volynskaya [Volynka]	033	Kurganskaya [Kurgan]	352
Voronezhskaya [Voronezh]	073	Kurgan-Tyube	433
Voroshilovgradskaya [Voroshilovgrad]	064	Kurskaya [Kursk]	071
Vostochko-Kazakhstanskaya [Eastern Kazakhstan]	323	Kustanayskaya [Kustanay]	314
Gomel'skaya [Gomel']	023	Latvinskaya [Latvian]	013
Gorno-Badakhshanskaya [Borno-Badakhshan]	364	Leninabadskaya Leninabad]	379
Gorno-Altayskaya [Gorno-Altay]	388	Leningradskaya [Leningrad]	812
Gor'kovskaya [Gor'kiy]	831	Lipetskaya [Lipetsk]	074
Grodnenskaya [Grodno]	015	Litovskaya [Lithuanian]	012
Gruzinskaya [Georgian]	883	L'vovskaya [L'vov]	032
Gur'yevskaya [Gur'yev]	312	Magadanskaya [Magadan]	413,414
Dagestanskaya [Dagestan]	872	Mangyshlakskaya [Mangyshlak]	329
Dzhambulskaya [Dzhambul]	326	Mariyskaya [Mari]	836
Dzhezkazganskaya [Dzhezkazgan]	310	Maryyskaya [Mari]	370

Republic, kray, oblast, city	ABC Code	Republic, kray, oblast, city	ABC Code
Dzhizakskaya [Dzhizak]	372	Minskaya [Minsk]	017
Dnepropetrovskaya [Dnepropetrovsk]	056	Mogilevskaya [Mogilev]	022
Donetskaya [Donetsk]	062	Moldavskaya [Moldavian]	042
Dushanbinskaya [Dushanbe]	377	Mordovskaya [Mordovian]	834
Yevreyskaya [Yevra]	426	Moskva [Moscow]	095
Zhitomirskaya [Zhitomir]	041	Moskovskaya [Moscow]	096
Zakarpatskaya [Trans Carpathian]	031	Murmanskaya [Murmansk]	815
Zaporozhskaya [Zaporozh'ye]	061	Nagorno-Karabakhskaya	393
Ivanovskaya [Ivanovo]	093	Namanganskaya	369
Ivano-Frankovskaya [Ivano-Frankovsk]	034	Narynskaya [Naryn]	335
Irkutskaya [Irkutsk]	395	Nakhichevanskaya [Nakhichevan]	891
Issyk-Kul'skaya [Issyk-Kul']	319	Nikolayevskaya [Nikolayev]	051
Kabardino-Balkarskaya [Kabardino-Balkar]	866	Novgorodskaya [Novgorod]	816
Kaliningradskaya [Kaliningrad]	011	Novosibirskaya [Novosibirsk]	383
Kalininskaya [Kalinin]	082	Novokuznetskaya [Novokuznetsk]	386
Odesskaya [Odessa]	048	Ternopol'skaya [Ternopol']	035
Omskaya [Omsk]	381	Tomskaya [Tomsk]	382
Orenburgskaya [Orenburg]	353	Tuvinskaya [Tuva]	394
Orlovskaya [Orlovskiy]	086	Tul'skaya [Tula]	087
Oshskaya [Osh]	332	Turgayskaya [Turgay]	330
Pavlodarskaya [Pavlodar]	318	Tyumenskaya [Tyumen']	345
Penzenskaya [Penza]	841	Udmurtskaya [Udmurt]	341
Permskaya [Perm']	342	Ul'yanovskaya [Ul'yanovsk]	842
Poltavskaya [Poltava]	053	Ural'skaya [Ural'sk]	311
Primorskaya [Primorskoye	423	Ferganskaya [Fergana]	373
Pskovskaya [Pskov]	811	Frunzenskaya [Frunze]	331
Pyatigorsk	879	Khabarovskaya [Khabarovsk]	421
Rovenskaya	036	Khakasskaya	390
Rostovskaya [Rostov]	863,864	Khar'kovskaya [Khar'kov]	057
Ryazanskaya [Ryazan']	091	Khersonskaya [Kherson]	055
Samarkandskaya [Samarkand]	366	Khmel'nitskaya	038
Saratovskaya [Saratov]	845	Khorezmskaya	362
Sakhalinskaya [Sakhalin]	424	Tselinogradskaya [Tselinograd]	317
Sverdlovskaya [Sverdlovsk]	343,344	Chardzhouskaya [Chardzhou]	378
Severo-Kazakhstanskaya [Northern Kazakhstan]	315	Chelyabinskaya [Chelyabinsk]	351
Severo-Osetinskaya	867	Chernigovskaya [Chernigov]	046
Semipalatinskaya [Semipalatinsk]	322	Cherkasskaya [Cherkassy]	047
Smolenskaya [Smolensk]	081	Chernovitskaya	037
Sochi	862	Chechenko-Ingushakaya [Chechenko-Ingush]	871
Stavropol'skaya [Stavropol']	865	Chimkentskaya [Chimkent]	325
Sumskaya	054	Chitinskaya [Chita]	302
Surkhan-Dar'inskaya [Surkhan-Dar'ya]	376	Chuvashskaya [Chuvash]	835

[Appendix 1, continued]

Republic, kray, oblast, city	ABC Code	Republic, kray, oblast, city	ABC Code
Syr-Dar'inskaya [Syr-Dar'ya]	367	Estonskaya [Estonian]	014
Taldy-Kurganskaya [Taldy-Kurgan]	328	Yugo-Osetinskaya	884
Tambovskaya [Tambov]	075	Yakutskaya [Yakut]	411,412
Tatarskaya [Tatarsk]	843	Yalta	060
Tashauzskaya [Tashauz]	360	Yaroslavskaya [Yaroslavl']	085
Tashkentskaya [Tashkent]	371		

Codes:

Long-distance offices	020, 030, 050, 070, 080, 090, 097, 820, 830, 850, 860, 880, 320, 350, 430, 380, 420
For connection to the KIA	441-444, 440
Departmental networks	451-450
For checking equipment	
Automatic charge computing AUS	000
For access to the main dispatch monitoring station of the TsKU	300
For access to the message switching centers TsKS	401-400; 491-490

Code reserve -- used as the network is further developed.

APPENDIX 2.

Table of the number of segregated direct channels between AMTS as a function of the magnitude of the outgoing load between these AMTS with indication of the magnitude of excess loads and limiting distances to which it is expedient to segregate n direct channels. Distance between AMTS L_{lim}<500 km, excess load passes through one tandem junction

Исходящая нагрузка y, Эрл	Число прямых каналов, n	Избыточная нагрузка $R=yE_n(y)$	$L_{пр}$	Исходящая нагрузка y, Эрл	Число прямых каналов, n	Избыточная нагрузка $R=yE_n(y)$	$L_{пр}$
1	2	3	4	1	2	3	4
1,4	0			11,0	12	1,75	> 150
	6	—	100		18	0.16	
1,5	0			11,5	18	0,23	—
	6	—	150	12,0	18	0,29	—
1,6	0			12,5	18	0,42	—
	6	—	250	13,0	18	0,55	—
1,7	0			13,5	18	0,7	—
	6	—	350	14,0	18	0,88	—
1,8	6	—	—	14,5	18	1,14	—
1,9	6	—	—	15,0	18	1,29	—
2,0	6	0,03	—	15,5	18	1,53	—
2,1	6	0,04	—	16,0	18	1,8	—
2,3	6	0,05	—	16,5	18	2,06	> 100
2,4	6	0,06	—		24	0,31	
2,5	6	0,07	—	17,0	24	0,4	—
2,6	6	0,08	—	17,5	24	0,51	—
2,7	6	0,1	—	18,0	24	0,63	—
2,8	6	0,12	—	18,5	24	0,78	—
2,9	6	0,14	—	19,0	24	0,84	—
3,0	6	0,16	—	19,5	24	1,12	—
3,1	6	0,18	—	20,0	24	1,32	—
3,2	6	0,2	—	20,5	24	1,54	—
3,3	6	0,23	—	21,0	24	1,78	> 250
3,4	6	0,26	—		30	0,22	
3,5	6	0,29	—	21,5	24	2,03	> 100
3,6	6	0,32	—		30	0,36	
3,7	6	0,35	—	22,0	30	0,45	—
3,8	6	0,39	—	22,5	30	0,56	—
3,9	6	0,43	—	23,0	30	0,68	—
4,0	6	0,47	—	23,5	30	0,86	—
4,5	6	0,7	—	24,0	30	0,96	—
5,0	6	0,96	—	24,5	30	1,13	—
5,5	6	1,26	—	25,0	30	1,32	—
6,0	6	1,52	> 250	25,5	30	1,52	—
	12	0,07		26,0	30	1,71	—
6,5	12	0,12	—	26,5	30	1,96	> 230
7,0	12	0,13	—		36	0,39	
7,5	12	0,28	—	27,0	30	2,21	
8,0	12	0,41	—		36	0,47	—
8,5	12	0,56	—	27,5	36	0,58	—
9,0	12	0,75	—	28,0	36	0,69	—
9,5	12	0,96	—	28,5	36	0,82	—
10,0	12	1,2	—	29,0	36	0,96	—
10,5	12	1,46	—	29,5	36	1,11	—

Key:

1. Outgoing load y, erlangs
2. No of direct channels, n
3. Excess load $R=yE_n(y)$
4. L_{lim}

[Appendix 2, continued]

1	2	3	4
30,0	36	1,29	—
30,5	36	1,53	—
31,0	36	1,67	—
31,5	36	1,86	—
32,0	36	2,11	> 150
	42	0,65	
32,5	36	2,34	> 100
	42	0,48	
33,0	42	0,69	—
33,5	42	0,82	—
34,0	42	0,94	—
34,5	42	1,09	—
35,0	42	1,23	—
35,5	42	1,42	—
36,0	42	1,58	—
36,5	42	1,79	—
37,0	42	2,0	—
37,5	42	2,2	—
38,0	42	2,43	> 100
	48	0,68	
38,5	48	0,8	—
39,0	48	0,91	—
39,5	48	1,05	—
40,0	48	1,23	—
40,5	48	1,33	—
41,0	48	1,52	—
41,5	48	1,7	—
42,0	48	1,89	—
42,5	48	2,08	> 200
	54	0,57	
43,0	48	2,32	> 130
	54	0,66	
43,5	48	2,56	> 100
	54	0,77	
44,0	54	0,88	—
44,5	54	1,01	—
45,0	54	1,14	—
45,5	54	1,29	—
46,0	54	1,45	—
46,5	54	1,58	—
47,0	54	1,79	—
47,5	54	2,0	> 300
	60	0,56	
48,0	54	2,21	> 200
	60	0,59	
48,5	54	2,43	> 120
	60	0,74	
49,0	60	0,84	—
49,5	60	0,96	—
50,0	60	1,09	—
50,5	60	1,23	—
51,0	60	1,37	—
51,5	60	1,62	—
52,0	60	1,69	—
52,5	60	1,89	—
53,0	60	2,12	> 300
	66	0,66	
53,5	60	2,32	> 180
	66	0,75	
54,0	60	2,75	> 100
	66	0,86	
54,5	66	0,97	—
55,0	66	1,07	—
55,5	66	1,18	—
56,0	66	1,29	—
56,5	66	1,47	—
57,0	66	1,57	—
57,5	66	1,81	—
58,0	66	1,97	> 500
	72	0,64	
58,5	66	2,16	> 300
	72	0,72	
59,0	66	2,36	> 150
	72	0,8	
59,5	66	2,53	> 120
	72	0,77	
60,0	66	2,7	> 100
	72	0,97	
60,5	72	1,11	—
61,0	72	1,26	—
61,5	72	1,4	—
62,0	72	1,55	—
62,5	72	1,68	—
63,0	72	1,89	—
63,5	72	1,99	—
64,0	72	2,18	> 300
	78	0,72	
64,5	72	2,39	> 200
	78	0,83	
65,0	72	2,6	> 140
	78	0,95	
65,5	72	2,87	> 80
	78	1,08	
66,0	78	1,2	—
66,5	78	1,32	—
67,0	78	1,45	—
67,5	78	1,58	—
68,0	78	1,7	—
68,5	78	1,88	—
69,0	78	2,07	> 400
	84	0,71	
69,5	78	2,25	> 300
	84	0,81	
70,0	78	2,45	> 200
	84	0,91	
70,5	78	2,64	> 150
	84	1,01	
71,0	78	2,89	> 90
	84	1,11	
71,5	84	1,21	—

Key:

1. Outgoing load y, erlangs
2. No of direct channels, n
3. Excess load $R=yE_n(y)$
4. L_{lim}

[Appendix 2, continued]

1	2	3	4	1	2	3	4
72,0	84	1,31	—		102	1,01	220
72,5	84	1,47	—	87,0	96	2,7	>
73,0	84	1,63	—		102	1,1	170
73,5	84	1,78	—	87,5	96	2,89	>
74,0	84	1,92	—		102	1,19	100
74,5	84	2,32	>		102	1,29	—
	90	0,76	400	88,0	102	1,43	—
75,0	84	2,32	>	88,5	102	1,58	—
	90	0,84	260	89,0	102	1,73	—
75,5	84	2,48	>	89,5	102	2,03	—
	90	0,92	190	90,0	102	2,08	—
76,0	84	2,66	>	90,5	102	2,18	—
	90	0,99	100	91,0	102	2,33	>
76,5	84	2,85	>	91,5	108	0,92	350
	90	1,13	80		102	2,49	>
77,0	90	1,26	—	92,0	108	0,99	240
77,5	90	1,4	—		102	2,69	>
78,0	90	1,53	—	92,5	108	1,13	200
78,5	90	1,67	—		102	2,88	>
79,0	90	1,81	—	93,0	108	1,24	140
79,5	90	1,93	—		102	3,08	>
80,0	90	2,00	—	93,5	108	1,36	100
80,5	90	2,29	>		108	1,48	—
	96	0,86	350	94,0	108	1,61	—
81,0	90	2,51	>	94,5	108	1,74	—
	96	0,97	200	95,0	108	1,86	—
81,5	90	2,61	>	95,5	108	1,99	—
	96	1,08	150	96,0	108	2,17	—
82,0	90	2,87	>	96,5	108	2,33	—
	96	1,19	120	97,0	108	2,53	—
82,5	96	1,3		97,5	108	2,74	>
83,0	96	1,42	—	98,0	114	1,36	400
83,5	96	1,54	—		108	2,9	>
84,0	96	1,65	—	98,5	114	1,48	330
84,5	96	1,74	—		108	3,07	>
85,0	96	1,96	—	99,0	114	1,59	260
85,5	96	2,17	—		108	3,28	>
86,0	96	2,3	>	99,5	114	1,71	180
	102	0,92	480		108	3,5	>
86,5	96	2,53	>	100,0	114	1,83	102

Key:

1. Outgoing load y, erlangs
2. No of direct channels, n
3. Excess load $R=yE_n(y)$
4. L_{lim}

APPENDIX 3

Table for calculating the numbers of M and VM as a function of the number of calls for half of the office

(1) Количество групп RM	(2) Количество вызовов в ЧНН	(3) Количество		(1) Количество групп RM	(2) Количество вызовов в ЧНН	(3) Количество	
		M	VM			M	VM
1	3 400—4 000	1	2		17 100—18 200	6	6
	4 000—6 400	2	2		18 200—19 900	5	9
	6 400—7 300	2	3		19 900—22 500	6	9
	7 300—8 700	3	3		22 500—23 800	7	9
	8 700—9 600	3	4		23 800—24 500	8	9
	9 500—10 500	4	4		24 500—25 500	7	12
	10 500—11 200	4	5		25 500—27 300	8	12
	11 200—11 800	5	5		27 300—28 400	9	12
2	4 200—6 700	2	2		28 400—29 000	10	12
	6 700—8 400	2	4		29 000—29 600	9	15
	8 400—10 700	3	4		29 600—30 800	10	15
	10 700—12 100	4	4	4	4 800—8 200	2	4
	12 100—12 500	3	6		8 200—11 000	3	4
	12 500—14 600	4	6		11 000—13 500	4	4
	14 600—15 700	5	6		13 500—13 800	3	8
	15 700—16 400	6	6		13 800—17 700	4	8
	16 400—16 800	5	8		17 700—20 200	5	8
2	16 800—18 600	6	8		20 200—22 100	6	8
	18 600—18 800	7	8		22 100—23 400	7	8
	18 800—19 300	8	8		23 400—24 300	8	8
	19 300—20 100	7	10		24 300—25 000	6	12
	20 100—20 800	8	10		25 000—28 000	7	12
	20 800—21 000	9	10		28 000—30 000	8	12
	21 000—21 100	10	10		30 000—31 100	9	12
3	4 500—7 800	2	3		31 100—31 800	10	12
	7 800—10 200	3	3		31 800—32 800	9	16
	10 200—15 000	3	6		32 800—34 700	10	16
	15 000—15 500	4	6		34 700—35 600	10	20
	15 500—17 100	5	6				

Key:

1. No of RM groups
2. No of calls in the peak load hour (PLH)
3. Number

BIBLIOGRAPHY

1. GOST 19472-74. AVTOMATIZATSIYA TELEFONNOY SVYAZI. TERMINY I OPREDELENIYA [All-Union State Standard 19472-74. Automation of Telephone Service. Terms and Definitions].

2. GOST 19692-74. SISTEMY I PRIBORY SVYAZI KOMMUTATSIONNYYE. TERMINY I OPREDELENIYA [All-Union State Standard 196962-74. Switching Systems and Devices for Communications. Terms and Definitions].

3. PROVODNYYE SREDSTVA SVYAZI. STANTSII MEZHDUGORODNYYE TELEFONNYYE. VEDOMSTVENNYYE NORMY TEKHNOLOGICHESKOGO PROYEKTIROVANIYA [Wire Communications Media. Long-Distance Telephone Offices. Departmental Technological Design Norms], Moscow, Svyaz', 1979.

4. AVTOMATICHESKAYA MEZHDUGORODNAYA I SEL'SKAYA TELEFONNAYA SVYAZ' [Automatic Long-Distance and Rural Telephone Service], edited by Ye. A. Zayonchkovskiy, Moscow, Svyaz', 1976.

5. Livshits, B. S.; Fidlin, Ya. V.; Kharkevich, A. D. TEORIYA TELEFONNYKH I TELEGRAFNYKH SOOBSHCHENIY [Theory of Telephone and Telegraph Communications], Moscow, Svyaz', 1971.

6. TEORIYA TELETRAFIKA [Teletraffic Theory], translated from the German, edited by G. P. Basharin, Moscow, Svyaz', 1971.

7. Elldin, A.; Lind, G. OSNOVY TEORII TELETRAFIKA [Principles of Teletraffic Theory], translated from the English, edited by A. D. Kharkevich, Moscow, Svyaz', 1972.

8. Shneps, M. A. CHISLENNYYE METODY TEORII TELETRAFIKA [Numerical Methods of Teletraffic Theory], Moscow, Svyaz', 1974.

9. Basharin, G. P. TABLITSY VEROYATNOSTEY I SREDNEKVADRATICHNYKH OTKLONENIY POTER' NA POLNODOSTUPNOM PUCHKE LINIY [Tables of Probabilities and Mean Square Deviations of Losses on a Fully Accessible Group of Lines], Moscow, Akademizdat, 1962.

10. Il'in, O. K.; Rozenshteyn, I. I. PROYEKTIROVANIYE MEZHDUGORODNYKH TELEFONNYKH STANTSIY [Designing Long-Distance Telephone Offices], Moscow, Svyaz', 1973.

11. Livshits, B. S.; Mel'nikov, K. P.; Frolova, A. A. RASCHET CHISLA PRIBOROV ATS K-100/2000 [Calculating the Number of ATS K-100/2000 Automatic Telephone Office Devices], Moscow, Svyaz', 1968.

12. Lutov, M. F. KVAZIELEKTRONNYYE ATS [Quasielectronic Automatic Telephone Offices], Moscow, Svyaz', 1968.

13. Ivanova, O. N. ELEKTRONNAYA KOMMUTATSIYA [Electronic Switching], Moscow, Svyaz', 1971.

14. Ivanova, O. N.; Popova, A. G.; Solovoy, Yu. V. UPRAVLYAYUSHCHIYE USTROYSTVA KVAZIELEKTRONNYKH KOMMUTATSIONNYKH SISTEM [Control Units for Quasielectronic Switching Systems], Moscow, Svyaz', 1975.

15. Prager, E.; Trnka, Ya. ELEKTRONNYYE TELEFONNYYE STANTSII [Electronic Telephone Offices], translated from the Czechoslovakian, edited by V. G. Lazarev, Moscow, Svyaz', 1976.

16. SOORUZHENIYA GRAZHDANSKIYE PREDPRIYATIY PROVODNOY I POCHTOVOY SVYAZI. VEDOMSTVENNYYE NORMY TEKHNOLOGICHESKOGO PROYEKTIROVANIYA [Wire and Postal Service Civilian Agency's Structures. Departmental Technological Design Norms], Moscow, Svyaz', 1976.

17. RAZVITIYE SVYAZI V SSSR [Development of Communications in the USSR], edited by N. D. Psurtsev, Moscow, Svyaz', 1967.

18. Gol'shteyn, L. M.; Sasonko, S. M. ORGANIZATSIYA MEZHDUGORODNOY SVYAZI NA MESTNYKH TELEFONNYKH SETYAKH [Organization of Long-Distance Service on Local Telephone Networks], Moscow, Svyaz', 1976.

10845
CSO: 8344/0489

- END -