Some physiological and biochemical properties of wilt-resistant and wilt-susceptible cotton plants. A. A. Babayan, A. D. Avetisyan, and V. S. Sodzhyan. *Izvest. Akad. Nauk Armyan. S.S.R., Biol. i Sel'skokhoz. Nauki* 8, No. 4, 63-71 (in Russian; Armenian summary) (1955).—A study was made of the roles played by the following physiol. factors in the resistance of cotton plants to verticilliose wilt: dynamics of respiration and photosynthesis; peroxidase and polyphenol oxidase activity; the comparative toxicity of polyphenols as wilt stimulants; and the effect of tannin substances. It was shown that verticilliose wilt infection in any type of cotton plant lowers the photosynthetic properties of the leaves, even of those which appear to be unaffected by the infection. In infected leaves, however, the photosynthetic properties may be reduced to zero and CO_2 elimination may be as intensive in the presence of light as it usually is in the dark. This is equally true of experimentally infected normally resistant and nonresistant plants. The respiration intensity in seedlings is on a higher level in susceptible plants. The peroxidase and polyphenoloxidase activity intensities run parallel to that of the photosynthetic activity. In healthy normally wilt-resistant cotton plants and particularly in resistant plants successfully infected experimentally, some physiol. processes are intensified and the polyphenols are intensively drawn into the oxidation-reduction process. In such plants the formation of tannin substances is augmented; especially increased are the tannides and polyphenols which exert a depressing effect upon the development of the parasitic verticilliose. The case is similar to the susceptible types of cotton plants, but there is in addn. an extensive accumulation of products of oxidation.

B. Sl. Levine

2

Country : USSR
Cultivated Plants.Commercial, Oil-Bearing, Sugar-Bearing.
Jour.: Izv. Akad.-Biologiya, No. [illegible], 1957, No. [illegible] 389

Author : Agatigan, A.D.
Inst. : AS Armenian SSR
Title : Physiological Bases of Field Methods Used to Determine Irrigation Time for Cotton.

Orig. Pub.: Izv. AN ArmSSR. Biol. i s.-kh., 1957,10, No.9, 59-64

Abstract : The results of a comparative study and evaluation of the different field methods used to diagnose the water requirements of cotton: morphological (darkening of leaves and enlargement of the flowering node), temperature, refractometric and the stream methods.

Card : 1/1

AVETISYAN, A.D.; SIRATYAN, M.S.

Effect of the water balance of soil and plant on the susceptibility of cotton to wilt. Izv. AN Arm. SSR. Biol. nauki 15 no.1:59-68 Ja '62. (MIRA 15:2)

1. Institut zemledeliya Ministerstva sel'skogo khozyaystva Armyanskoy SSR.

(COTTON WILT) (SOIL MOISTURE)

AVETISYAN, A.D.; SMBATYAN, N.S.

Some physiological characteristics of corn plants. Izv. AN Arm. SSR. Biol. nauki 17 no.10:21-28 O '64. (MIRA 18:8)

1. Institut zemledeliya ArmSSR.

PROCESSES AND PROPERTIES INDEX

BC

A-4

[Anti-]bacterial activity of phenols. N. N. Melnikov, A. M. Ammosov, and M. S. Rokitskaya (*Compt. rend. Acad. Sci. U.R.S.S.*, 1941, 31, 88).—Data are given for the phenol and mol. phenol coeff. of a series of chlorinated phenols, *p*-substituted phenols, and alkyl- and aryl-chlorophenols, using *Paramecium caudatum* as test organism. An increase in the no. of Cl in the phenol mol. increases the effectiveness against *P. caudatum*. There is a pronounced increase in activity in passing from phenol to tetra- and penta-chlorophenol. The least and most active compounds are 3 : 4 : 6-tri- and tetra-chlorophenol, respectively. Various substituents in the *p*-position to the hydroxyl group increase the activity of phenol, except the chloro- and sulpho-groups which cause a decrease. A more active compound is usually obtained when the *p*-H is replaced by a hydrocarbon radical. The activity of alkylphenols is increased by increase in mol. wt. of the alkyl radical. The increase is particularly marked with *p*-benzylphenol. Alkyl- and aryl-chlorophenols are much more active than the corresponding compounds which contain no halogen. It is concluded that the mechanism of the action of phenolic compounds on *P. caudatum* is similar to that on other bacteria, and that certain bacteria and micrococci have phenols which are similar in constitution and composition.

J. N. A.

ASM-SLA METALLURGICAL LITERATURE CLASSIFICATION

YEGIKYAN, A.A.; AVETISYAN, A.M.

Action of a sexual mentor when using various quantities of pollen and different fertilization methods in corn. Izv.AN Arm.SSR.Biol.i sel'khoz.nauki. 4 no.3:267-273 '51. (MLRA 9:8)

1. Institut genetiki i selektsii rasteniy Akademii nauk Armyanskoy SSR.

(Corn (Maize))

SIMONYAN, A.T.; AVETISYAN, A.M.; MELIK-ADAMYAN, A.A.

Therapeutical effect of the new Russian preparation "arpenal" in bronchitic asthma. Izv. AN Arm SSR, Biol. i sel'khoz. nauki 11 no.2:31-36 F '58. (MIRA 11:3)

1. Kafedra gospital'noy terapii Yerevanskogo meditsinskogo instituta.
(PHARMACOLOGY) (ASTHMA)

SIMONYAN, A.T.; BUNATYAN, B.P.; AVETISYAN, A.M.

Treating stenocardia and hypertension with ganglerone. Izv. AN Arm. SSR. Biol. i selkhoz. nauki 11 no.9:99-104 S '58. (MIRA 11:12)

1.Gospital'naya terapevticheskaya klinika Yerevanskogo meditsindkogo instituta.
(ANGINA PECTORIS) (HYPERTENSION) (GANGLERONE)

AVE / 4 3 YHYY A-/-

COUNTRY : USSR V

CATEGORY : Pharmacology and Toxicology. Ganglionic Blocking Agents

ABS. JOUR. : RZhBiol., No. 5 1959, No. 23106

AUTHOR : Simonyan, A.T.; Bunatyan, V.P.; Avetisyan, A.M.

INST. : -

TITLE : Treatment of Stenocardia and Hypertension with the Preparation Ganglieron

ORIG. PUB. : Klinich. meditsina, 1958, 36, No 3, 76-80

ABSTRACT : On the basis of observation of 33 patients with hypertension and disturbance of the coronary circulation, it is concluded that ganglieron possesses nicotinolytic properties and, as to effectiveness, surpasses other preparations of the same type.

Card: 1/1

AVETISYAN, A. N., ekonomist

Labor productivity in coal preparation plants and factors affecting its growth. Obog. i brik. ugl. no.24:63-67 '62. (MIRA 15:10)

(Coal preparation plants—Labor productivity)

SKLOVSKAYA, A.A., otv. red.; DREMAYLO, P.G., insh., zam. otv. red.; KAMINSKIY, V.S., kand. tekhn. nauk, zam. otv. red.; AVETISYAN, A.N., red.; BRILLIANTOV, V.V., kand. tekhn. nauk, red.; GALIGUZOV, N.S., kand. tekhn. nauk, red.; GORLOV, I.P., red.; GREBENSHCHIKOV, V.P., red.; DAVYDKOV, N.I., red.; ZVENIGORODSKIY, G.Z., red.; KARPOVA, N.N., red.; KOZKO, A.I., red.; MARUSEV, P.A., red.; PONOMAREV, I.V., red.; POPUTNIKOV, F.A., red.; SOKOLOVA, M.S., kand. tekhn. nauk, red.; TURCHENKO, V.K., red.; FILIPPOV, V.A., red.; YUSIPOV, A.A., red.; YAGODKINA, T.N., red.; MIRONOVA, T.A., red. izd-va; LOMILINA, L.N., tekhn. red.; MAKSIMOVA, V.V., tekhn.red.

[Technological trends in coal preparation] Tekhnicheskie napravleniia obogashcheniia uglei. Moskva, Gos.nauchno-tekhn. izd-vo lit-ry po gornomu delu, 1963. 120 p. (MIRA 16:10)

1. Gosudarstvennyy proyektno-konstruktorskiy i nauchno-issledovatel'skiy institut po obogashcheniyu i briketirovaniyu ugley. 2. Gosudarstvennyy proyektno-konstruktorskiy i nauchno-issledovatel'skiy institut po obogashcheniyu i briketirovaniyu ugley (for Yagodkina, Brilliantov).
(Coal preparation)

AVETISYAN, A.V.

Investigation of complex double-cross interlineal hybrids and hybrid groupings of corn in Kamo District. Izv. AN Arm. SSSR Biol.nauki 15 no.8:87-89 Ag '62. (MIRA 16:2)
(KAMO DISTRICT--HYBRID CORN)

APPROVED FOR RELEASE: 06/06/2000 CIA-RDP86-00513R000102610013-7"

APPROVED FOR RELEASE: 06/06/2000 CIA-RDP86-00513R000102610013-7"

APPROVED FOR RELEASE: 06/06/2000 CIA-RDP86-00513R000102610013-7"

LIPSHTEYN, R.A., kand. tekhn. nauk; AVETISYAN, A.S., inzh.; BLAGOVA, T.A., inzh.; KOSOBOKOVA, E.M., inzh.; CHUYKOVA, T.A., inzh.

Effect of the composition of fuel ashes on the vanadium corrosion of metals. Teploenergetika 11 no.4:42-44 Ap '64. (MIRA 17:6)

1. Vsesoyuznyy teplotekhnicheskiy institut.

ACCESSION NR: AP4044559 S/0096/64/000/009/0019/0022

AUTHORS: Lipshteyn, R. A. (Candidate of technical sciences); Avetisyan, A. S. (Engineer); Blagova, T. A. (Engineer); Kosobokova, E. M. (Engineer); Chuykova, T. A. (Engineer)

TITLE: On the problem of using petroleum fuel with vanadium corrosion-reducing additives in gas turbines

SOURCE: Teploenergetika, no. 9, 1964, 19-22

TOPIC TAGS: fuel additive, fuel, silicon, magnesium, calcium, zinc, vanadium, corrosion/ GTU 600 1.5 turbine, EYa 1T steel, EI 405 steel, PMS 15 polymethylsiloxane

ABSTRACT: A set of additives dissolved in fuels was tested in a model fire-test stand for the purpose of lowering vanadium corrosion. The fuels contained 0.03% V, 0.002% Na, and 0.9% S. As metallic specimens steel plates of the type EYa-1T and part of a GTU-600-1.5 turbine blade made of steel EI-405 were selected. The additives included Mg, Ca, Zn, Al, and a polymethylsiloxane (PMS-15). In all cases the ratio of metal or silicon (in the fuel) to vanadium was 3:1 (by weight). At 705C, all but the zinc naphthanate fuel showed vanadium corrosion removal. At 810C, only Mg naphthanates and polymethylsiloxane showed corrosion prevention. At 910C, only Mg naphthanate retained this ability. Magnesium additive No. 50, similar to

Card 1/2

ACCESSION NR: AP4044559

magnesium naphthanate, showed complete corrosion removal in steels EI-405 and EYa-1T through the range 700-900C, whereas technical product No. 51 with Si:V = 2:1 content showed a similar behavior only up to 800C. The rest of the additives were less effective. Orig. art. has: 2 figures and 2 tables.

ASSOCIATION: Vsesoyuzny*y teplotekhnicheskiy institut (All-Union Heat Technology Institute)

SUBMITTED: 00

ENCL: 00

SUB CODE: PR, GC, MM

NO REF SOV: 010

OTHER: 000

Card 2/2

LIPSHTEYN, R.A., kand. tekhn. nauk; AVETISYAN, A.S., inzh.; BLAGOVA, T.A., inzh.; KOCOBOKOVA, E.M., inzh.; CHUYKOVA, T.A., inzh.

Use of petroleum fuel in a gas turbine system and soluble admixtures for decreasing vanadium corrosion. Teploenergetika 11 no.9:19-22 S '64. (MIRA 18:8)

1. Vsesoyuznyy teplotekhnicheskiy institut.

ACCESSION NR: AP4025422 S/0096/64/000/004/0042/0044

AUTHORS: Lipshteyn, R. A. (Candidate of technical sciences); Avetisyan, A. S. (Engineer); Blagova, T. A. (Engineer); Kosobokova, E. N. (Engineer); Chuykova, T. A. (Engineer)

TITLE: The effect of the fuel ash on vanadium corrosion of metals

SOURCE: Teploenergetika, no. 4, 1964, 42-44

TOPIC TAGS: corrosion, vanadium corrosion, vanadium pentoxide, sodium sulfate, fuel, petroleum residue, fuel ash, turbine, turbine vane, steel EI-405, steel EYa-1T, diesel oil, sulfur, fuel combustion stand

ABSTRACT: The corrosive effect on samples of metals kept in ash containing vanadium pentoxide and sodium sulfate was reported on in an earlier paper by R. A. Lipshteyn, S. E. Khaykina, and E. S. Ginzburg ("Teploenergetika", No. 8, 1960). The most corrosive mixture contained a ratio 87/13 of V_2O_5/Na_2SO_4. Since the ash deposits on the vanes of GTU 600-1.5 turbines (fueled by sulfur-containing petroleum residues) consisted mainly of V_2O_5 and Na_2SO_4, the authors' intention was to

Card 1/3

ACCESSION NR: AP4025422

prove the corrosiveness of such fuels by direct experiment. They constructed a small unit provided with a spray burner, of a 2L/hr capacity, as well as with a chamber containing the metallic samples, which were exposed to the corrosive effect of the combustion gases, at a temperature range of 700-900C. The fuel used was a vanadium-free diesel oil, containing 0.9% sulfur, in which were dissolved the desired metalloorganic compounds. In the first series of experiments the ratio of V_2O_5/Na_2SO_4 varied, while keeping the total ash content of the oil constant at 0.0537%. It was found, that the corrosive aggressiveness of the fuel depended to a large extent on the temperature. Thus, at 900C the maximum corrosiveness was obtained with fuels containing 96% V_2O_5 in their ash, while at 700C the optimum corrosive concentration of V_2O_5 was 91%. In the second series of experiments the concentration of V_2O_5 in the fuel was kept constant at 0.053%, while to it were added either 0.006% Na_2SO_4 or 0.002% Pb, Cu, Ni, or Fe. It was found that the addition of Na_2SO_4 reduced somewhat the corrosiveness of vanadium, as did the addition of lead and iron. Orig. art. has: 5 charts and 2 tables.

ASSOCIATION: Vsesoyuznyy teplotekhnicheskiy institut (All-Union Thermo-technical

Card 2/3

Call Nr: AF 1108325

Transactions of the Third All-union Mathematical Congress (Cont.) Moscow, Jun-Jul '56, Trudy '56, V. 1, Sect. Rpts., Izdatel'stvo AN SSSR, Moscow, 1956, 237 pp.
There is 1 USSR reference.

Eydel'man, S. D. (L'vov). On the Method of Fundamental Solutions of the Theory of Parabolic Systems. 72-73

There are 4 references, all of them USSR.

Section of the Theory of Functions. 74-113

Reports of the Following personalities are included:

Avetisyan, A. E. (Yerevan). On Approximation of Function of Many Variables by Entire Functions. 74-75

Mention is made of Dzhrbashyan, M. M.

Al'per, S. Ya. (Rostov-na-Donu). On the Asymptomatic Values of the Best Approximation of Analytic Function in Complex Region. 75

Card 22/80

AVETISYAN, A. E.

-3

Yerevan State U
im. Molotov

Avetisyan, A. E. On the theory of generalized integral transforms of functions of several variables. (Akad. Nauk Armyan. SSR. Izv. Fiz. Mat. Estest. Tekh. Nauki 9 (1956), no. 5, 3-24. (Russian. Armenian summary)

Dzrbašyan [Izv. Akad. Nauk. SSSR. Ser. Mat. 19 (1955), 133-190; MR 16, 1102] obtained results in the theory of generalized Fourier transforms with kernel $E_\rho(zt, \mu)$ where $E_\rho(z, \mu)$ is the Mittag-Leffler function $\sum_{n=0}^{\infty} z^n/\Gamma(\mu + n/\rho)$. This paper gives direct generalizations of these results to functions of two variables with kernels of the type

$$E_{\rho_1}(z_1t_1, \mu_1)E_{\rho_2}(z_2t_2, \mu_2).$$

F. Goodspeed (Vancouver, B.C.).

AUTHOR: Dzhrbashyan, M.M., Member of the Academy of Sciences of the Armenian SSR, and Avetisyan, A.Yo. SOV/20-120-3-4/67

TITLE: The Integral Representation of Some Functional Classes Analytic in an Angular Domain (Integral'noye predstavleniye nekotorykh klassov funktsiy, analiticheskikh v oblasti ugla)

PERIODICAL: Doklady Akademii nauk SSSR, 1958, Vol 120, Nr 3, pp 457-460 (USSR)

ABSTRACT: In five theorems the authors give very long integral representations of some functional classes analytic in an angular domain. As special cases some older results of Paley, Wiener as well as of Macintyre [Ref 4] are obtained. The obtained representations are directly connected with the approximation by integral functions. The paper is based upon former investigations of Dzhrbashyan [Ref 1,2] with respect to its subject and method.
There are 4 references, 2 of which are Soviet, 1 American, and 1 English.

SUBMITTED: February 10, 1958

Card 1/2

The Integral Representation of Some Functional Classes SOV/20-120-3-4/67
Analytic in an Angular Domain

1. Mathematics--Theory 2. Integral functions--Applications

Card 2/2

16.4400

S/022/59/012/05/01/009

AUTHOR: Avetisyan, A.Ye.

TITLE: Some Applications of the Theory of Generalized Integral Transformations 16

PERIODICAL: Izvestiya Akademii nauk Armyanskoy SSR. Seriya fiziko-matematicheskikh nauk, 1959, Vol. 12, No.5, pp.3-16

TEXT: Theorem 1 : If $F(z) \in N_2(\alpha, \rho, \mu)$, then the representation

$F(z) = \sum_{n=0}^{\infty} A_n R_n(z)$ holds, where the series converges uniformly in every closed region of the domain $|\arg z| < \alpha$. The rational functions $R_n(z)$, $n = 0,1,\ldots$, with the poles $\{-\lambda_\nu^{1/\rho}\}$ are defined by

$$(1.7) \qquad \frac{\sqrt{2\lambda_n}}{2\pi i} \int_{C_n'} \frac{\prod_{\nu=0}^{n-1} (\zeta + \lambda_n)\zeta^{1/\rho - \mu}}{\prod_{\nu=0}^{n} (\zeta - \lambda_n)(\zeta^{1/\rho} + z)} \, d\zeta = R_n(z)$$

Card 1/4

$0 < \lambda_0 \leq \lambda_1 \leq \ldots \leq \lambda_n \leq \ldots$, $\sum_{n=0}^{\infty} \frac{1}{\lambda_n + \frac{1}{2}} = \infty$. The coefficients A_n are given by the boundary values of $F(z)$:

$$(1.13) \quad A_n = \frac{e^{-i\frac{\pi}{2}(1-\mu)}}{2\pi\rho} \int_0^{\infty} F(y^{1/\rho} e^{-i\alpha})\, y^{\mu-1} \phi_n(iy)\,dy + \frac{e^{i\frac{\pi}{2}(1-\mu)}}{2\pi\rho} \int_0^{\infty} F(y^{1/\rho} e^{i\alpha})\, y^{\mu-1} \phi_n(-iy)\,dy ,$$

where

$$(1.11) \quad \phi_m(\mp iy) = \mp 2\lambda_n \frac{\prod_{\nu=0}^{m-1}(iy - \lambda_\nu)}{\prod_{\nu=0}^{m}(iy + \lambda_\nu)}$$

Card 2/4

Some Applications of the Theory of Generalized Integral Transformations S/022/59/012/05/01/009

Dzhrbashyan for the guidance.
There are 10 references: 6 Soviet, 3 American and 1 German.

ASSOCIATION: Institut matematiki i mekhaniki AN Armyanskoy SSR (Institute of Mathematics and Mechanics AS Armenian SSR)

SUBMITTED: May 6, 1959

Card 4/4

AVETISYAN, A. Ye.

Two theorems on functions, analytic in angular domains. Dokl.AN Arm.SSR 29 no.5:193-202 '59. (MIRA 13:6)

1. Institut matematiki i mekhaniki Akademii nauk Armyanskoy SSR. Predstavleno akad. AN Armyanskoy SSR M.M. Dzhrbashyanom.

(Functions, Analytic)

AVETISYAN, A. YE, Cand Phys-Math Sci — (diss) "Integral and parametric representations of function analytic in angular regions," Yerevan, 1960, 13 pp, 150 cop. (Institute of Mathematics and Mechanics, AS Armenian SSR) (KL, 44-50, 127)

DZHRBASHYAN, M.M.; AVETISYAN, A.Ye.

Integral representation of some classes of functions analytic in angular domain. Sib. mat. zhur. 1 no.3:383-426 S-O '60.
(MIRA 14:2)

(Functions, Analytic)

L 19561-65 EWT(d) IJP(c)/AFWL/ASD(a)-5/ASD(a)

ACCESSION NR: AP5002079 S/0199/63/004/004/0713/0722

AUTHOR: Avetisyan, A. Ye.

TITLE: Entire functions representable by a generalized integral transformation

SOURCE: Sibirskiy matematicheskiy zhurnal, v. 4, no. 4, 1963, 713-722

TOPIC TAGS: complex variable, integral operator

ABSTRACT: The function f(u) belongs to the class M_α if it is holomorphic in the angular region

$$\Delta_\alpha : |\arg u| < \frac{\pi}{2\alpha} \qquad \left(\alpha > \rho > \frac{1}{2}\right) \tag{1}$$

and satisfies the following conditions:

a) for any $\delta > 0$ in the region

$$\Delta_\alpha^{(\delta)} : |\arg u| \leqslant \frac{\pi}{2\alpha} - \delta, \tag{2}$$

$$\lim_{u \to \infty} \frac{\ln \ln \frac{1}{|f(u)|}}{\ln |u|} = \lambda > \lambda_1 > \rho; \tag{3}$$

Card 1/3

L 19561-65
ACCESSION NR: AP5002079

b) for any $\delta > 0$ in a neighborhood of $u = 0$ lying in the region $\Delta_{\alpha}^{(\delta)}$,

$$|f(u)| < B_\delta |u|^{\beta-1}, \tag{4}$$

where β is any positive number and B_δ is a constant depending only on δ. The function $F(z)$ belongs to the class $M_\alpha^*(\rho)$ if it is entire, of finite order ρ_1, $\rho_1 > \frac{\alpha\rho}{\alpha-\rho} > \rho$, and for any $\delta > 0$ in the angular region $K_\alpha(\rho, \delta)$ $\left(|\arg z| > \frac{\pi}{2\rho} - \frac{\pi}{2\alpha} + \delta\right)$ satisfies the condition

$$|F(z)| < c_\delta \frac{1}{|z|^\beta}, \tag{5}$$

where β is a positive number and c_δ is a constant depending only on δ.

Theorem 1. If $f(u) \in M_\alpha$, then the function $F(z)$, defined by

$$F(z) = \int_0^{\infty e^{i\theta}} E_\rho(zu; \mu) f(u)\, du \quad \left(|\theta| \leq \frac{\pi}{2\alpha} - \delta,\ \rho > \frac{1}{2},\ \mu > 0\right), \tag{6}$$

where $E_\rho(z;\mu)$ is an entire Mittag-Loeffler function of order ρ, belongs to the

Card 2/3

L 19561-65
ACCESSION NR: AP5002079

class $M^*_{\sigma}(\rho)$. Theorem 2. If $F(z) \in M^*_{\sigma}(\rho)$, then the function $f(z)$ defined by

$$f(z) = \frac{1}{2\pi i} z^{\mu\rho-1} \int_{\Gamma_\delta} e^{-tz^\rho} F(t^{1/\rho}) t^{\mu-1} dt, \qquad (7)$$

belongs to the class M_{σ}, where the contour Γ_δ consists of two rays $\arg \zeta = \pm \psi_0$, $\psi_0 = \frac{\pi}{2} - \frac{\pi\rho}{2} + 2\delta\rho$, and the contour is taken in the positive direction with respect to the angular region containing the negative real axis. Theorem 3. The class of functions $M^*_{\sigma}(\rho)$ coincides with the class of entire functions representable in the form of the generalized integral transformation

$$F(z) = \int_0^\infty E_\rho(zu;\mu) f(u)\, du, \qquad (8)$$

where $f(u)$ is an arbitrary function from the class M_{σ}. Orig. art. has: 44 formulas.

ASSOCIATION: none

SUBMITTED: 27Nov61

ENCL: 00

SUB CODE: MA

NO REF SOV: 005

OTHER: 000

Card 3/3

ACCESSION NR: AP4018289 S/0144/64/000/001/0034/0042

AUTHOR: Bertinov, A. I.; Misyurin, S. R.; Avetisyan, D. A.

TITLE: Dynamics of inverters supplied by a source of commensurable power

SOURCE: IVUZ. Elektromekhanika, no. 1, 1964, 34-42

TOPIC TAGS: inverter, dc ac inverter, aircraft dc ac inverter, aircraft inverter dynamics, inverter supplied by weak source

ABSTRACT: Dc-ac inverters used in aviation and rocketry are often supplied by a source whose power is comparable to that of the inverter. This fact may affect the inverter's automatic voltage and frequency controls. Hence, the dynamic behavior of the system source-inverter is theoretically analyzed in the article; two independent controllers are assumed to be operating in the system (see Enclosure 1). These conclusions are offered: (1) Two reasons may be responsible for the unstable operation of the inverter: (a) half number of the

Card 1/3

ACCESSION NR: AP4018289

commutating poles in the generator which may bring about a positive connection between the generator voltage and the motor current, resulting in the system h-f cycling; (b) the positive feedback in the motor-control system which grows with the load; this may result in the system l-f cycling; (2) With a specified supply source having its own voltage regulator, the system stability may be somewhat enhanced by selecting motor parameters on the basis of the stability conditions given in the article; (3) Generally, the power source impairs the inverter stability; hence, an autonomous control system for the inverter is desirable. Orig. art. has: 4 figures and 15 formulas.

ASSOCIATION: MAI (Moscow Aviation Institute)

SUBMITTED: 17Feb62 DATE ACQ: 23Mar64 ENCL: 01

SUB CODE: CG NO REF SOV: 001 OTHER: 000

Card 2/3

ACC NR: AP6027916 SOURCE CODE: UR/0105/66/000/006/0069/0074

AUTHOR: Avetisyan, Dzh. A. (Candidate of technical sciences; Moscow); Bertinov, A. I. (Doctor of technical sciences, Professor; Moscow)

ORG: none

TITLE: Multistage processes in the selection of optimal sizes for electrical machines

SOURCE: Elektrichestvo, no. 6, 1966, 69-74

TOPIC TAGS: dynamic programming, Monte Carlo method, system design, optimization, analog computer, nonlinear programming

ABSTRACT: The authors consider the problem of the optimal design of electrical machines as a general problem of nonlinear programming in a formulation such as to permit the use of modern computers employing mathematical programming techniques. Familiar methods for finding the maximum function of many variables (limited and unlimited search methods) are briefly reviewed, and the need for more rational methods for computer analysis of optimal electrical machines is noted. In the present article a multistage process is proposed for the solution of optimization problems, with primary attention given to the logical structure of a multistage computer model, apart from a strict substantiation of the limits of its applicability. The consecutive approximation method underlying the multistage search process is analyzed, and it is shown how such computer models for any number of unknown variables can be described.

Card 1/2

UDC: 621.313:001.12

ACC NR: AP6027916

The logical structure of a multistage process for the location of the maximum function of three variables is diagrammed and the basic properties of this process are analyzed. These properties are a single-stage process for the maximization of many variables is converted to a sequential multistage process, and a multistage process is carried out in the form of a series of iteration processes, easily realizable on analog computers. It is shown that the method of dynamic programming can be applied to the specific case of a synchronous generator with rotating inductor and electromagnetic drive. The logical operations at each step of the process are analyzed, and specific computer algorithm recommendations are advanced. Using a BESM-2M computer, determination of optimal values for seven independent dimensions required no more than 7-8 min. Orig. art. has: 25 formulas and 6 figures.

SUB CODE: 09/ SUBM DATE: 03Nov65/ ORIG REF: 002/ OTH REF: 001

Card 2/2

ACC NR: AT6036262

SOURCE CODE: UR/2535/66/000/165/0113/0124

AUTHOR: Avetisyan, Dz. A. (Candidate of technical sciences)

ORG: none

TITLE: VI. Losses due to inverse field in single-phase synchronous solid rotor machines

SOURCE: Moscow. Aviatsionnyy institut. Trudy, no. 165, 1966. Beskontaktnyye i unipolyarnyye elektricheskiye mashiny (Contactless and unipolar electrical machines), 113-124

TOPIC TAGS: motor, motor generator, magnetomotive force, electromagnetic wave

ABSTRACT: In single-phase synchronous machines the pulsating magnetomotive force of the stator is split into two (direct and backward) half-amplitude waves rotating in opposite directions. The backward wave of the magnetomotive force possesses double synchronous speed relative to the rotor and, therefore, losses caused by it in the solid rotor can be considerable. Formulas are derived for determining these losses which are subdivided into losses in the solid rotor, losses in the stator yoke, and losses in the stator teeth. In the approach used for obtaining the formulas the magnetic permeability is assumed to be constant, whereas its dependence on the magnetic field strength is considered in the final formulas only. The problem of losses in the solid rotor is essentially reduced to the penetration of electromagnetic

Card 1/2

UDC: 621.313.32.001 (04)

AVETISYAN, D.A., kand. tekhn. nauk; MIZYURIN, S.R., kand. tekhn. nauk

Choice of the parameters of precision-type controllers of the angular velocity of d.c. motors. Elektrotekhnika 36 no.7:22-26 Jl '65. (MIRA 18:7)

L 10031-67 EWT(1)

ACC NR: AP6022906 SOURCE CODE: UR/0292/66/000/004/0026/0030

AUTHOR: Avetisyan, D. A. (Candidate of technical sciences)

ORG: none

TITLE: Compound frequency-voltage control in dynamoelectric inverters

SOURCE: Elektrotekhnika, no. 4, 1966, 26-30

TOPIC TAGS: inverter, dynamoelectric inverter, rotary electric power converter, dynamotor

ABSTRACT: A modification is described of the frequency-and-voltage automatic control system used in a dc/ac 2-machine power inverter. Compounding cross couplings between the frequency-control channel and the voltage-control channel represent a distinguishing feature of this system. In the functional diagram (see figure): MCW and MSW - motor control and series windings, respectively; DCM - dc motor; A_1 and A_2 - amplifiers; SG - single-phase synchronous

Card 1/2

UDC: 621.314.24.313.07

L 10031-67

ACC NR: AP6022906

0

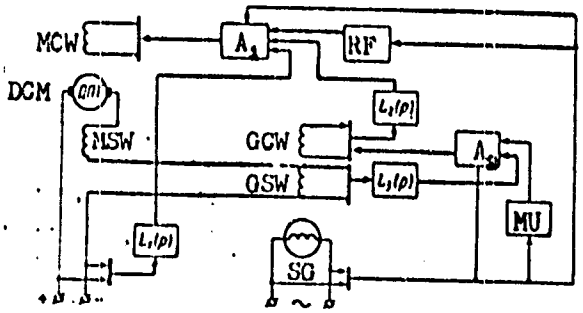

generator; GCW and GSW - generator control and series windings, respectively; RF - resonant filters; MU - measuring unit. The system operation is described by a set of differential equations whose solution determines the conditions of invariance between voltage and frequency variations. The system was tested on a 6-kva model operating with 0—5-amp load current and 26—32-v supply voltage. The observed frequency variation was 2 cps or ± 0.25% and voltage variation, ± 0.7 v or ± 0.6%. With no compounding cross couplings, the corresponding variations were: frequency, ± 1.5% and voltage, ± 1.8%. Orig. art. has: 6 figures and 8 formulas.

SUB CODE: 09 / 10 / SUBM DATE: none / ORIG REF: 004

Card 2/2 egk

AVETISYAN, Dzh. A., kand. tekhn. nauk (Moskva); BEKATINOV, A.I., doktor tekhn. nauk, prof. (Moskva)

Optimal design of a salient-pole inductor of a synchronous machine. Elektrichestvo no.6:45-50 Je '65. (MIRA 18:7)

AVETISYAN, Dzh.A.; BERTINOV, A.I.; MIZYURIN, S.R.

Effect of the load on the voltage regulation stability of a synchronous generator in an automomous system. Elektrichestvo no.7:57-60 Jl '64. (MIRA 17:11)

1. Moskovskiy aviatsionnyy institut.

AVETISYAN, D.A., kand. tekhn. nauk

Invariant speed control of a d.c. motor with commensurable power source. Elektrotekhnika 35 no.10:7-9 O '64.

(MIRA 17:11)

AVETISYAN, D.O.

Study of the frequency characteristics of regulators based on direct measurement instruments. Izv. AN Arm. SSR. Ser. tekh. nauk 17 no.6:23-32 '64. (MIRA 18:3)

AVETISYAN, D.O.; PLUZYAN, E.B.; ALANAKYAN, G.A.

Using the method of radical hodograph in investigating frequency characteristics of linear dynamic systems. Izv.AN Arm.SSR.Ser.tekh. nauk 18 no.5:3-6 '65. (MIRA 18:12)

1. Submitted February 4, 1965.

KOSTANYAN, K.A.; AVETISYAN, E.M.;

Electric conductance of glasses of the system Na_2O - B_2O_3 - SiO_2 in the fused state. Izv. AN Arm SSR. Khim nauki 16 no.2:117-124 '63 (MIRA 17:8)

1. Institut khimii Soveta narodnogo khozyaystva ArmSSR.

AVETISYAN, F.O., inzh.; CHIKAYDA, S.G., inzh.

Automatic determination of the ash content of streptomycin solutions. Avtom.i prib. no.2:177-185 '61. (MIRA 14:12)
(Streptomycin--Testing)

AVETISYAN, F. O. [Avetysian, F. O.]; TRACHUK, S. V., kand. tekhn. nauk; PONOMARENKO, A. T.

Some problems in the automation of the aniline dye industry. Khim. prom. [Ukr.] no.1:67-69 Ja-Mr '62. (MIRA 15:10)

1. Institut avtomatiki Gosplana UkrSSR.

(Aniline) (Cleaning and dyeing industry) (Automation)

AVETISYAN, G.

"Kirovakan" by K. Kozmoian. Reviewed by G. Avetisian. Prom. Arm. 5 no.1:73-75 Ja '62. (MIRA 15:2)
(Kirovakan--Industries) (Kozmoian, K.)

AVETISYAN, G. A.

37458. Gazovyy rezhim v gnezde meddonosnykh pchel (Apis mellifera L.) V period zimnego pokoya. Doklady akad. nauk SSSR, Novaya seriya, t. LXIX, No. 5, 1949, c. 687-90.--Bibliogr: 13 nazv.

SO: Letopis' Zhurnal'nykh Statey, Vol. 7, 1949

1. AVETISYAN, G. A

2. USSR (600)

4. Khalifman, I.

7. "Bees." I. Khalifman. Reviewed by G. Avetisyan. Pchelovodstvo No. 12 1952

9. Monthly List of Russian Accessions, Library of Congress, April 1953, Uncl.

AVETISYAN, G. A., Dr. Bio. Sci.

"On the Geographical Variability of the Nectar Production of Plants," Lomonsov Lectures in 1956, Vest. Mosk. U., Physico Math and Natural Sciences Series, 4, No. 6, pp. 147-160, 1956,

Translation U-3,054,363

USSR/Farm Animals - Honey Bee. Q-4

Abs Jour : Ref Zhur - Biol., No 1, 1958, 2759

Author : Avetisyan, G.A.

Inst : Agricultural Academy imeni K.A. Timiryazev

Title : Achievements in Promoting Apiculture in the Extreme North Regions.

Orig Pub : Dokl. Mosk. s.-kh. akad. im. K.A. Timiryazeva, 1957, vyp. 30, ch. 2, 299-306.

Abstract : It was established that in the North, beyond the Polar Circle, nectariferous plants display a higher nectar productivity; controlled tests show a weight increase of up to 4 kg per day. The yield of hothouse and warmhouse cucumbers upon pollination by bees increased 2½ to 3 times, and their costs were reduced to a like extent.

Card 1/2

USSR/Farm Animals - Honey Bee. Q-4

Abs Jour : [illegible]

Author : Avetisyan, G.A., Glushkov, F.H.
Inst : -
Title : Apiculture in Finland (Personal Impressions)

Orig Pub : Pchelovodstvo, 1958, No 4, 49-53.

Abstract : Bees were first imported into Finland from Russia in 1780. At present, the total number of bee colonies in Finland is 25,000. The bee species is basically an endemic one: dark bees bear up well under hibernation and are sturdy. The principal source of nectar in the [illegible] Finland is white clover and great willow herb. A monthly journal, "Apicultural Affairs", is issued.

Card 1/1

AGAYAN, TSatur Pavlovich, doktor istor.nauk; KHARMANDARIAN, Segvard Vagarshakhovich; kand.istor.nauk; AVETISYAN, Grant Aleksandrovich; KAMINSKAYA, N.S., red.izd-va; GUSEVA, A.P., tekhn.red.

[The Armenian S.S.R.] Armianskaia SSR. Moskva, Izd-vo Akad. nauk SSSR, 1960. 71 p. (MIRA 13:4)
(Armenia)

AVETISYAN, G.A.; DIK, N.Ye.; PERMAKOV, N.P.; YUSOV, B.V.; SHCHERBAKOV, D.I., otv. red.; DOBRONRAVOVA, K.O., red.; PAVLOV, V.N., red.; MEYZEROV, S.M., red.; KOSHELEVA, S.M., tekhn. red.

[Our motherland; photographic album] Nasha Rodina; foto-al'bom. Moskva, Gos.izd-vo geogr.lit-ry, 1962. 388 p. (MIRA 15:8)

(Russia--Views)

AVETISYAN, G.A.

Recent data on fleas of the Armenian S.S.R. Izv.AN Arm.SSR.Biol. nauki 15 no.7:97-99 Jl '62. (MIRA 15:11)

1. Armyanskaya protivochumnaya stantsiya.
(ARMENIA--FLEAS)

AVETISYAN, G.A., prof.; ZAVARSKIY, A.I., red.

[Bee culture] Pchelovodstvo. Moskva, Kolos, 1965. 287 p.
(MIRA 18:7)

AVETISYAN, G.A.

Supplement to the list of fleas of the Armenian S.S.R.
Izv. AN Arm. SSR. Biol. nauki 18 no.3:75-80 Mr '65. (MIRA 18:5)

1. Armyanskaya protivochumnaya stantsiya.

AVETISYAN, G.A.; NOVOKRESHCHENOVA, N.S.; YUNDIN, Ye.V.; MARKARYAN, L.G.

Experimental study of feeding habits of fleas of a field mouse in alpine areas of Armenia with the help of radioactive isotopes. Izv. AN Arm. SSR. Biol. nauki 18 no.9:102-106 S '65. (MIRA 18:12)

1. Armyanskaya protivochumnaya stantsiya, Vsesoyuznyy nauchno-issledovatel'skiy protivochumnyy institut "Mikrob" i Stavropol'-skiy filial institut "Mikrob". Submitted August 14, 1964.

ACC NR: AP6012111 SOURCE CODE: UR/0016/65/018/009/0102/0106

AUTHOR: Avetisyan, G. A.; Novokreshchenova, N. [illegible]; [illegible], Ye. [illegible]; Markaryan, L. G.

ORG: Armanian Anti-Plague Station (Armyanskaya [illegible] stantsiya); All-Union Scientific Research Anti-Plague Institute "Mikrob" [illegible] nauchno-issledovatel'skiy protivochumnyy institut "Mikrob"); Stavropol' Branch, Institute "Mikrob" (Stavropol'skiy filial instituta "Mikrob")

TITLE: Experiments to study the feeding of fleas of the [illegible] vole in high-altitude conditions of Armenia with radioactive isotopes

SOURCE: AN ArmSSR. Izvestiya. Seriya biologicheskikh nauk, v. 18, no. 9, 1965, 102-106

SUBJECT TAGS: [illegible] ecology, epidemiology, [illegible] sulfur

ABSTRACT: Voles were caught, radioactive sulfur was placed in their stomachs and they were released. From one to five days later, they and those within a radius of 10 meters from where they were released were caught again, and the number of labelled fleas was recorded. The index for feeding activity was taken to be the time required for a majority of the fleas in the colony to become labelled. The experiment was conducted in two habitats (altitude: 2,300 and 1,750 meters) where epizootics of plague had occurred, and at the time of the experiment (July 1964) the predominant species of fleas were Ctenophthalmus wladimiri, Amphipsylla rossica, and Ceratophyllus consimilis. All three species showed high feeding activity, in that over half of the fleas became labelled in 24 hours. When the time of the experiment was

Card 1/2

ACC NR: AT5031111

lengthened from one to five days, it was found that the number of nests containing labelled fleas increased from 35.3 to 58.2%, indicating the mobility of voles and fleas. In the summer season the difference in altitude between the two habitats had no effect. The ecological factors indicated by the experiment could facilitate the initiation and development of a plague epizootic in high-altitude conditions of Armenia. Orig. art. has: 3 tables. [JPRS]

SUB CODE: 06, 18 / SUBM DATE: 14Aug64 / ORIG REF: 005

Card 2/2

ZAROBYAN, A.I., inzh.; AZOTYAN, N.N., inzh.; AVETISYAN, G.H., inzh.

Activated clays of Armenia. Masl.-zhir.prom. 25 no.10:36-37 '59. (MIRA 13:2)

(Armenia--Clay)

AVETIS'YAN, G.M.; ATSEKHOVSKAYA, V.A.; SHURAY, L.I.

Effect of nicotinic acid on blood coagulation under experimental conditions. Farm. i toks. 26 no.2:216-219 Mr-Ap '63. (MIRA 17:8)

1. Kafedra farmakologii (zav. - prof. I.E. Akopov) Kubanskogo meditsinskogo instituta imeni Krasnoy Armii.

16(1)

AUTHOR: Avetisyan, G.M. SOV/22-11-6-1/10

TITLE: On the Approximation of Analytic Functions by Entire Functions (O priblizhenii analiticheskikh funktsiy tselymi funktsiyami)

PERIODICAL: Izvestiya Akademii nauk Armyanskoy SSR. Seriya fiziko-matematicheskikh. Nauk 1958, Vol 11, Nr 6, pp 3-14 (USSR)

ABSTRACT: Let the domain D contain the real axis and be bounded by $y = \pm \varphi(x)$, where $\varphi(x) > 0$ is a smooth curve tending monotonely to zero for $|x| \to \infty$.
Theorem: Let $f(z)$ be analytic in D, $\varepsilon > 0$ arbitrarily small. There exists an entire function $F(z)$ with the properties

$$|F(x) - f(x)| < \varepsilon \quad , \quad -\infty < x < \infty ,$$

and

$$|F(z)| < \left[\frac{C\,R\,M(KR)}{\varphi(KR)}\right]^{1+C_1\varphi(0)} \cdot \left(\frac{1}{\varepsilon}\right)^{C_1\varphi(0)} ,$$

where $|z| \leqslant R$, $K \geqslant 2$, $M(R) = \max\limits_{\substack{z \in D \\ |z| \leqslant R}} |f(z)|$.

Card 1/2

On the Approximation of Analytic Functions by Entire Functions SOV/22-11-6-1/10

The theorem is proved with the aid of two lemmata according to M.V. Keldysh [Ref 1].
There are 1 figure, and 3 Soviet references.

ASSOCIATION: Leninakanskiy pedagogicheskiy institut imeni M.Nalbandyana (Leninakan Pedagogical Institute imeni M. Nalbandyan)

SUBMITTED: December 10, 1957

Card 2/2

16(1) 05245
AUTHOR: Avetisyan, G.M. SOV/140-59-5-1/25

TITLE: On the Approximation of Continuous Functions by Entire Functions on the Real Axis

PERIODICAL: Izvestiya vysshikh uchebnykh zavedeniy. Matematika, 1959, Nr 5, pp 3-15 (USSR)

ABSTRACT: Generalizing the results of M.V.Keldysh [Ref 1], with the aid of four lemmas the author proves the following theorem:
Theorem: Let $f(x)$ be continuous and

$$\sup_{-\eta-R\leq\xi\leq R+\eta} |f'(\xi)| < M(R),$$

where $\max_{-R\leq\xi\leq R} |f'(\xi)|$. Then for every $\varepsilon>0$ there exists an entire function $F(z)$ which satisfies the following inequations:

$$(39) \qquad |F(z)| < \left[C_1 R^2 M(kR)\right]^{1+C\frac{\delta}{M(0)}} \cdot \left(\frac{1}{\varepsilon}\right)^{C\frac{\delta}{M(0)}} \qquad |z|<R$$

and

$$(40) \qquad |F(x) - f(x)| < B\delta ,$$

Card 1/2

AVETISYAN, G.M.

In connection with the article "Approximation of continuous functions by entire functions on a real axis." Izv. vys. ucheb. zav.; mat. no. 3:268 '60. (MIRA 13:12)

(Functions, Entire)

AVETISYAN, G. M.

In connection with the article "Approximation of analytic functions by entire functions." Izv. AN Arm. SSR. Ser. fiz.-mat. nauk 13 no.2:147-148 '60. (MIRA 13:10)

(Function, Analytic)

AVETISYAN, G. M.

Cand Phys-Math Sci - (diss) "Approximation to whole functions in the complex field." Moscow, 1961. 8 pp; (Moscow Oblast' Pedagogical Inst imeni N. K. Krupskaya); 200 copies; price not given; (KL, 5-61 sup, 171)

AVETISYAN, G.M. (Yerevan)

Approximation of analytic functions with an estimate of the growth of the approximating integral functions. Izv. vys. uchob. zav.; mat. no.3:3-14 '65. (MIRA 18:7)

~~5(4)~~ 15.6000

66177

SOV/20-128-5-31/67

AUTHORS: Avetisyan, I. S., Yepifanov, G. I.

TITLE: The Effect of Surface-active Lubricants on Shear Strength in Friction

PERIODICAL: Doklady Akademii nauk SSSR, 1959, Vol 128, Nr 5, pp 973-976 (USSR)

ABSTRACT: The coefficients of friction are primarily determined by the shear strength of the weaker material of the two bodies rubbing each other and by the entire surface formed in friction. When the friction surface is coated with a thin solid film ($\sim 0.1\mu$) of low shear strength (graphite, soft plastic metals, etc), the shear is shifted from the surface of the rubbing bodies into the film. Herefrom it follows that shear component f_c of friction must be equal to the shear strength of the film material. This was confirmed by investigations of the lubricating action of graphite, tin, lead, cadmium, zinc, and copper films on steel surfaces. The authors then investigated the influence exerted by solid and liquid organic lubricants. Experiments were made by means of a hemispherical slider of hardened steel (diameter = 12 mm, perpendicular stress = 12.5 kg for Pb-, Cd-, and Zn-surfaces,

Card 1/4

66177

The Effect of Surface-active Lubricants on Shear Strength in Friction SOV/20-128-5-31/67

25 kg for Al- and Sn-surfaces, 50 kg for Fe- and Cu-surfaces, and 62.5 kg for surfaces of the EI-437 alloy). In the first series of experiments the authors investigated the behavior of paraffin, cetyl alcohol, and palmitic acid. Results (Table 1) indicate that shear component f_c is similarly reduced to about 1:60 for the three substances. The same applies to the coefficients of friction μ which are reduced to 1:20 approximately. Accordingly, there is no difference between apolar paraffin and the surface-active substances cetyl alcohol and palmitic acid so that the lubricating action cannot be explained by the formation of limit phases. The effect of these solid organic lubricants is attributed to the shielding of the friction surfaces. The friction surfaces of thick layers of solid organic lubricants are hardly plasticized by adsorption. When the layer thickness is, however, reduced within the range of thinnest boundary layers, plasticizing probably plays a decisive part. Oleic acid appeared to be less effective than palmitic acid though the carbon chains of both compounds are almost equally long since the friction surfaces are insufficiently shielded by liquid oleic acid. At high pressure, however, when the formation of boundary layers becomes important, liquid oleic acid

Card 2/4

66177

The Effect of Surface-active Lubricants on Shear Strength in Friction SOV/20-128-5-31/67

ASSOCIATION: Institut fizicheskoy khimii Akademii nauk SSSR (Institute of Physical Chemistry of the Academy of Sciences, USSR)

PRESENTED: May 18, 1959 by P.A. Rebinder, Academician

SUBMITTED: April 27, 1959

Card 4/4

89709

1583
15.6000 1404

S/139/61/000/001/017/018
E073/E535

AUTHORS: Avetisyan, I.S. and Yepifanov, G. I.

TITLE: Investigation of the Lubrication Properties of Molecular Layers of Organic Lubricants

PERIODICAL: Izvestiya vysshikh uchebnykh zavedeniy, Fizika, 1961, No.1, pp.171-172

TEXT: In earlier work of the authors (Ref.1) it was shown that the effect of excess layers of solid organic lubricants on the characteristics of friction consists to a considerable extent in the separation of the rubbing surfaces. However, this does not exclude the effect of adsorption plastification (Ref.2), the magnitude of which should manifest itself to an increasing extent with a decrease in the thickness of the lubricant film. In addition to elucidating the role of adsorption plastification, it was considered of interest to verify what film thickness of the lubricant corresponds to a maximum effect of reducing friction. For this purpose the effect of monomolecular layers of such surface active lubricants as stearic acid and cetyl alcohol on the friction of a rubbing pair, copper-high speed steel, was investigated on an instrument, a schematic sketch of which is

Card 1/4

thickness of 15 to 17 layers of lubricant film, an almost maximum decrease is observed in the friction coefficient, which hardly changes with a further increase of the film thickness. This justifies the assumption that films of stearic acid of a thickness of 15 to 17 layers are sufficiently strong to withstand normal loads and to ensure perfect separation of the rubbing surfaces. Calculations show that for a friction coefficient μ between 0.08 and 0.1 the degree of screening of the copper surface that is lubricated with a film of stearic acid is approximately 90%. Equal results were obtained for cetyl alcohol. Thereby, the limit value of the friction coefficient proved to be independent of the nature of the polar group of the lubricant molecules. In friction experiments with rough machined surfaces (V. M. Korbut. DAN SSSR, 124, No.1, 1959) no lubrication effect was observed for monolayers of stearic acid; a lubrication effect manifested itself from a thickness of the lubricant film of five layers onwards. According to Korbut this is due to the fact that in the case of rough machining of rubbing pairs the nominal geometrical surface on which the lubricant layer is deposited differs greatly from the real surface forming the friction forces. There are 2 figures,

S/069/63/025/002/002/010
A057/A126

AUTHORS: Avetisyan, I.S., Bakayeva, T.V., Pospelova, K.A.

TITLE: On the stabilization of polystyrene latex by non-ionogenic emulsifiers

PERIODICAL: Kolloidnyy zhurnal, v. 25, no. 2, 1963, 143 - 145

TEXT: The emulsion polymerization of styrene was carried out with a mixture of technical grade non-ionogenic emulsifiers ОП-10 (OP-10) and xylital С -15 (S-15). The latter is a surface-active substance obtained from xylite by introducing a stearic-acid radical and 15 hydroxyethyl groups. OP-10 has a much higher activity than xylital S-15. Surface tension measurements were carried out and it was observed that near-to-equilibrium values might be obtained not only by the stalagmometer, but also by the du Nouy method. Purification of the surface-active substances by means of electrodialysis did not change considerably the surface activity but decreased the pH. Therefore, non-dialized aqueous solutions were used for the polymerization experiments. However, a stable emulsion of the monomer was obtained only with OP-10, while a block polystyrene re-

Card 1/2

On the stabilization of polystyrene latex S/069/63/025/002/002/010
A057/A126

sulted from polymerization with xylital S-15. Thus polymerization was carried out with a mixture of xylital S-15: OP-10 = 4 : 1, styrene, and potassium persulfate. The mixture was initially heated to 80°C and by the exothermic reaction the temperature rose to 95°C. Polymerization was carried out under soft mixing for 3 h. The latex obtained showed high dispersity (r about 0.1 μ), but pH = 4, apparently due to a partial saponification of xylital S-15. The dry residue of the latex was 31.4%, content of the monomer 2.8%. The latex showed high stability (without phase separation for 12 months) in storage. There is 1 figure.

ASSOCIATION: Institut fizicheskoy khimii AN SSSR, Moskva (Institute of Physical Chemistry of the AS USSR, Moscow)

SUBMITTED: October 9, 1961

Card 2/2

AVETISYAN, I.S., [illegible]LOVA, E.A.; ZUBOV, P.I.

Properties of polymethacrylate latex films as dependent on the molecular weight. Kol.zhur. 25 no.3:[illegible] My-Je '63.

(MIRA 17:10)

1. Institut Fizicheskoy Khimii AN SSSR, Moskva.

L 18414-66 EWT(m)/EWP(j)/T WW/RM

ACC NR: AP6003419 (A) SOURCE CODE: UR/0190/66/008/001/0098/0103

AUTHORS: Yeliseyeva, V. I.; Avetisyan, I. S.; Drezel'a, B. S.; Zubov, P. I. 31

ORG: Institute of Physical Chemistry, AN SSSR (Institut fizicheskoy khimii AN SSSR) B

TITLE: Role of branching of polymeric chains in the formation of latex films 15 15

SOURCE: Vysokomolekulyarnyye soyedineniya, v. 8, no. 1, 1966, 98-103

TOPIC TAGS: copolymer, polymerization kinetics, acrylic plastic

ABSTRACT: The effect of the length and branching of the alkyl substituent upon the coalescence process of latex particles has been studied in the copolymer 7,44,55 alkyl acrylate-vinyl acetate. The copolymer was synthesized by emulsion polymerization with the use of a homologous series of alkyl acrylates: C_1, C_2, C_4, and C_8. Kinetics of the process was investigated, and the physical and chemical properties of the product, as well as its behavior on drying as a thin film, were studied. Mechanical properties of various films are summarized in Fig. 1. It was established that lattices from copolymers of lower alkyl acrylates possess

Card 1/3 UDC: 678.01:53 2

L 18414-66

ACC NR: AP6003419

Fig. 1. Mechanical properties of copolymeric films: 1 - copolymer of vinyl acetate with methyl acrylate: 2 - with ethyl acrylate: 3 - with butyl acrylate: 4 - with 2-ethylhexylacrylate.

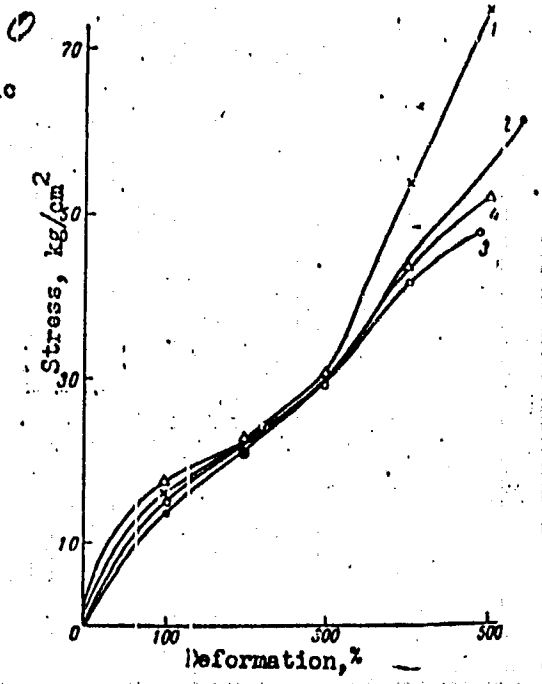

Card 2/3

L 18414-66
ACC NR: AP6003419

0

the best film-forming properties. This is ascribed to the ease of the interglobular and intermolecular contact in the case of short side chains. The same reasoning applies to the explanation of high water resistance of methyl- and ethylacrylic copolymers as compared with that of butyl- and 2-ethylhexylacrylic copolymers. Orig. art. has: 2 tables and 6 figures.

SUB CODE: 07/ SUBM DATE: 17Feb65/ ORIG REF: 003/ OTH REF: 005

Card 3/3

L 01803-67 EWT(m)/EWP(j)/T IJP(c) WW/RM

ACC NR: AP6030605 (AN) SOURCE CODE: UR/0413/66/000/016/0093/0093 40 B

INVENTOR: Yeliseyeva, V. I.; Avetisyan, I. S.; Drezel'n, S. S.; Zubov, P. I.; Popov, V. A.; Makarov, Yu. A.; Izmaylova, I. S.; Orlova, K. G.; Gerasimova, A. S.; Gordonov, M. D.; Il'chenko, G. I.; Shreyner, S. A.

ORG: none

TITLE: Method of obtaining alkyl acrylate copolymers. Class 39, No. 185057 16

SOURCE: Izobreteniya, promyshlennyye obraztsy, tovarnyye znaki, no. 16, 1966, 93

TOPIC TAGS: copolymer, copolymerization, monomer, alkyl acrylate

ABSTRACT: An Author Certificate has been issued for a method of obtaining alkyl acrylate copolymers with a vinyl acetate by emulsion copolymerization of the proper monomers in the water phase in the presence of an anion emulsifier. To obtain stable dispersions, 1--5 mol % unsaturated carboxylic acid, such as methacrylic acid, is introduced into the initial monomer mixture. [Translation] [NT]

SUB CODE: 07/ SUBM DATE: 16Jan65/

Card 1/1 UDC: 678.744.32-139

AVETISYAN, N.A., mladshiy nauchnyy sotrudnik

Susceptibility of spring wheat to the Swedish fly as related to sowing dates and rates. Zashch.rast.ot vred.i bol. 5 no.3:56 Mr '60. (MIRA 16:1)

1. Sektor mikrobiologii AN Armyanskoy SSR.
(Armenia—Wheat—Diseases and pests)
(Armenia—Frit flies)

AVETISYAN, I.S.; POSPELOVA, K.A.; ONIKUL, K.E.; ZUBOV, P.I.;
Prinimala uchastiye DREZEL'S, S.S.

Obtaining the copolymer of vinyl acetate with butyl acrylate for emulsion paints. Lakokras.mat. i ikh prim. no.2:13-15 '64.
(MIRA 17:4)

AVETISYAN, KH. A.

Avetisyan, Kh. A.

"The Artashat Region of the Armenian SSR (Economic-Geographic Characteristics)." Min Higher Education USSR. Yerevan State U imeni V. M. Molotov. Chair of Economic Geography. Yerevan, 1955 (Dissertation for the degree of Candidate in Geographical Sciences)

SO: Knizhnaya letopis' No. 27, 2 July 1955

L 9869-63 EWT(m)/BDS--RM/MAY
ACCESSION NR: AP3001357 S/0048/63/027/006/0796/0798 56 54

AUTHOR: Avetisyan, M. A.; Adamov, V. S.; Kantardzhyan, L. T.; Chirkinyan, S. S.

TITLE: Concerning protomeric forms of fluorescein and uranin [Report of the Eleventh Conference on Luminescence held in Minsk from 10 to 15 September 1962]

SOURCE: AN SSSR. Izv. Seriya fizicheskaya, v. 27, no. 6, 1963, 796-798

TOPIC TAGS: fluorescein, sodium fluorescein uranin, protometric transformations, fluorescein absorption, fluorescein luminescence

ABSTRACT: The protometric forms of fluorescein and its di-sodium salt uranin have been studied by many authors. It has been established from the characteristics of the absorption and luminescence spectra that in addition to the neutral molecule, there exist three ionic forms, produced as a result of protolytic reactions. At the same time the neutral molecule can be represented in two structurally different forms: lactone and quinoid. All these forms exhibit characteristic absorption and luminescence bands (the neutral molecule does not luminesce), but interpretation of the spectral data is rendered

Card 1/2

L 9869-63
ACCESSION NR: AP3001357

2

difficult by the fact that the pH ranges of existence of the different forms over-lap. New experimental data have been obtained on the spectra of fluorescein in dioxane solutions and uranin in potassium hydroxide solutions (1, 5, 10 and 15N). Increase of the alkali concentration above 1N results in decrease of the luminescence of the doubly charged uranin ion. With the passage of time strong KOH solutions turn blue in a few hours and then bleach after some days with complete loss of luminescence. The new results indicate that the list of equilibrium protolytic forms of fluorescein and uranin must be supplemented by two new ionic forms existing in strong alkaline solutions. The equilibrium constant for the two neutral forms of uranin and fluorescein is strongly dependent on the initial concentration of the dye. "The authors thank L. A. Gasparyan and R. G. Nazaryan for assistance in the work." Orig. art. has: 2 figures and 1 table.

ASSOCIATION: none

SUBMITTED: 00 DATE ACQ: 01Jul63 ENCL: 00

SUB CODE: PH,CH NR REF SOV: 004 OTHER: 005

ja/nh
Card 2/2

L 9904-63

ACCESSION NR: AP3000417 S/0076/63/037/005/1069/1074

44

AUTHOR: Avetisyan, M. A.; Adamov, V. S.; Mantardzhyan, L. T.; Chirkinyan, S. S.

TITLE: Photochemical behavior of uranin in liquid and solid solutions

SOURCE: AN SSSR. Zhurnal fizicheskoy khimii, v. 37, no. 5, 1963, 1069-1074

TOPIC TAGS: uranin, saccharine, boric organophosphors, atmospheric oxygen, photochemical processes, boric phosphor

ABSTRACT: Authors attempted to explain the effect of a preliminary light excitation on the luminescent properties of saccharine and boric organophosphors containing uranin ions in various relative concentrations as an activator. The luminescence and absorption spectrums of hard sugar candies and boric beads, which were prepared from aqueous solutions of uranin at various pH and subjected to a preliminary light excitation for various lengths of time in the presence of atmospheric oxygen, were studied. Authors conclude that photochemical processes in liquid solutions as well as in boric phosphor lead to the formation of non-luminescent products of the photoreaction of uranin. In glycerine and

Card 1/2

L 9904-63
ACCESSION NR: AP3000417

saccharine phosphor with a pH of about 4, the photoproduct causing the appearance of a short-wave luminescence band is identified with the uranin cation forming from the neutral molecule as the result of photochemical process. In saccharine phosphor with a pH of about 3.35, a substantially different progress of the photochemical process was established, which led to a sharp increase in the luminescence intensity. "The authors wish to thank V. A. Arutyunyan and D. G. Petrosyan for their help in this study." Orig. art. has: 7 figures.

ASSOCIATION: iInstitut radiofiziki i elektroniki, AN Armyanskoy SSR (Institute of radiophysics and electronics, AN Armenian SSR)

SUBMITTED: 25Apr62 DATE ACQ: 19Jun63 ENCL: 00

SUB CODE: 00 NR REF SOV: 004 OTHER: 003

Card 2/2

MANVELYAN, M.G.; ALEKSEYENKO, L.N.; AVETISYAN, M.K.

Using glazes made with "erevanite" and metasilicate in making faience products. Stek.i ker. 17 no.7:28-29 Jl '60. (MIRA 13:7)

1. Chlen-korrespondent AN Armyanskoy SSR.
(Glazes) (Pottery)

AVETISYAN, M. P.

AVETISYAN, M. P. --"The Treatment of Patients with Diseases of the Bone Joints at the Alam-Arasan Spa." Acad Sci Kazakh SSR. Inst of Physiology. Inst of Regional Pathology. Inst of Experimental Surgery. Alma-Ata, 1955. (Dissertation for the Degree of Candidate in Medical Sciences).

So.: Knizhnaya Letopis', No. 6, 1956.

AVETISYAN, M.P.

Treating rheumatic fever and infectious polyarthritis at the Alma-Arasan alpine health resort. Trudy Inst. Kraev. pat. AN Kazakh SSR 5:153-160 '57. (MIRA 11:2)

(RHEUMATIC FEVER) (ARTHRITIS)
(TRANS-ILI ALA TAU--MINERAL WATERS)

AVETISYAN, M.P.

Change in the blood sugar level in patients during balneological treatment at the Alma-Arasan alpine health resort. Trudy Inst. Kraev. pat. AN Kazakh SSR 5:161-165 '57. (MIRA 11:2)
(BLOOD SUGAR)
(TRANS-ILI ALA TAU--MINERAL WATERS)

BEKLEMISHEV, N.D.; AVETISYAN, M.P.

Brucellar arachnitis. Trudy Inst.kraev.pat.AN Kazakh.SSR 6:65-69 '58. (MIRA 12:6)

(MENINGITIS) (BRUCELLOSIS)

AVETISYAN, M.P.; BEKLEMISHEV, N.D.

[redacted]

Side effects of synthomycin on the psychological condition of brucellosis patients. Trudy Inst.kraev.pat.AN Kazakh.SSR 6: 141-145 '58. (MIRA 12:6)

(CHLOROMYCETIN) (BRUCELLOSIS)

AVETISYAN, M.P.

Application of Ziziphora Bunge in a clinic of internal diseases. Trudy Inst. fiziol. AN Kazakh. SSR 7:70-73 '62.

(MIRA 18:6)

AVETISYAN, N. A., Cand Agr Sci -- (diss) "Agrobiological characteristics of summer wheat and means of increasing its harvest yields in the Gukasyanskiy Rayon of the Armenian SSR." Yerevan, 1960. 30 pp; (Armenian Inst of Agriculture); 150 copies; price not given; (KL, 31-60, 142)