APPROVED FOR RELEASE: 06/23/11: CIA-RDP86-00513R000617800006-6

HANDLOVA, D.

Renal function in progressive polyarthritis. Fysiat. vestn. 43 no.6:321-325 D '65.

1. Vyzkumny ustav chorob revmatickych v Praze (reditel - prof. dr. F. Lenoch, DrSc.)

APPROVED FOR RELEASE: 06/23/11: CIA-RDP86-00513R000617800006-6

APPROVED FOR RELEASE: 06/23/11: CIA-RDP86-00513R000617800006-6

3256. AMYLOIDOSIS IN THREE CASES OF SPONDYLARTHRITIS ANKYLOPOETICA (MARIE-STRÜMPELL-BECHTEREW) - Amyloidosa u tří případů spondylarthritis ankylopoetica - Handlová D. Výzkumný Úst. Chor. Revmat., Praha - ČAS. LÉK. ČES. 1958, 97/15-16 (478-482)

In the 1st case amyloidosis was not diagnosed during life, in the 2nd case the kidney was affected by amyloidosis with a glomerulonephritic character, nephrotic type (haematuria and hypertension), despite the fact that inflammatory changes were not seen in the post-mortem kidney. In the 3rd case albuminuria was observed without changes in GFR or concentrating ability, with a marked loss of protein into the urine. The report is considered important because the majority of authors consider Marie-Strümpell disease as a separate entity, not identical with vertebral chronic progressive polyarthritis.

(VI, 19*)

APPROVED FOR RELEASE: 06/23/11: CIA-RDP86-00513R000617800006-6

APPROVED FOR RELEASE: 06/23/11: CIA-RDP86-00513R000617800006-6

CERMAK, Vladimir; HANDLIROVA, Marie

Influence of complex forming agents on acrylonitrile polymerization. Sbor VSChT Pardubice no.1:173-179 '64.

1. Chair of Technology of Plastics of the Higher School of Chemical Technology, Pardubice. Submitted October 10, 1963.

APPROVED FOR RELEASE: 06/23/11: CIA-RDP86-00513R000617800006-6

APPROVED FOR RELEASE: 06/23/11: CIA-RDP86-00513R000617800006-6

RUSEK, V.; HANDLICEK, Z.

History of the Czechoslovakian Pharmaceutical Society. II. Modern period (1919 - 1950). Cesk. farm. 13 no.4:210-218 My'64.

1. Ustav dejin lekarnictvi farmaceuticke fakulty UK [University Komenskeho], Bratislava; Farmaceuticke museum zavodniho klubu ROH lekarenske sluzby hl. mesta Prahy.

APPROVED FOR RELEASE: 06/23/11: CIA-RDP86-00513R000617800006-6

APPROVED FOR RELEASE: 06/23/11: CIA-RDP86-00513R000617800006-6

L 33543-66

ACC NR: AP6023475 SOURCE CODE: CZ/0038/66/000/004/0121/0126

AUTHOR: Kovar, Zdenek; Handl, Josef

ORG: Radiological Dosimetry, UJV, CSAV, Prague (Radiologicka dozimetrie UJV CSAV)

TITLE: Twin isothermal gamma calorimeter 19 with thermistors

SOURCE: Jaderna energie, no. 4, 1966, 121-126

TOPIC TAGS: calorimeter, thermistor, gamma radiation, radioactivity measurement

ABSTRACT: The construction of a calorimetric assembly suitable as fundamental laboratory equipment for activity standardization measurements of γ sources is described. The twin isothermal calorimeter with lead absorbing bodies is suspended in a thermostating oil bath and continuously evacuated. Thermistors are used as temperature sensitive elements. A relatively simple method of measurement and results of electric power calibration are presented. The sensitivity of calorimeter is $7.42(10)^{-2}$ deg per milliwatt. The verification measurements of ^{60}Co sample activities have proved that the new reported modification of isothermal calorimeter allows measuring activities of ^{60}Co from 20 mC and with accuracy up to 1 per cent. This paper was presented by Fr. Behounek. Orig. art. has: 5 figures, 7 formulas, and 3 tables. [NA]

SUB CODE: 18,09/ SUBM DATE: none / ORIG REF: 004 / SOV REF: 003
OTH REF: 002

Card 1/1 80 UDC: 539.12.082.6; 536.6: 539.166 0915 14/35

APPROVED FOR RELEASE: 06/23/11: CIA-RDP86-00513R000617800006-6

APPROVED FOR RELEASE: 06/23/11: CIA-RDP86-00513R000617800006-6

L 5014-66

ACCESSION NR: AP5023724

ASSOCIATION: Katedra Elektroenergetyki Politechniki Poznanskiej (Electric Power Engineering Department, Poznan Polytechnic Institute)

SUBMITTED: 00 ENCL: 00 SUB CODE: TD, ME

NO REF SOV: 005 OTHER: 005

Card 3/3

APPROVED FOR RELEASE: 06/23/11: CIA-RDP86-00513R000617800006-6

APPROVED FOR RELEASE: 06/23/11: CIA-RDP86-00513R000617800006-6

L 5014-66
ACCESSION NR: AP5023724

them are described and the results obtained are discussed. Consecutive measurements using the Pulfrich photometer gave temperatures of the flowing gas to be between 1200 and 1500C; the reason for this temperature spread is discussed. Tungsten filament sensors were used in the resistance method. Using this method it was impossible to measure the gas temperature because the high temperature and gas velocity quickly destroyed the filaments. Only the temperature of the tunnel walls could be measured by inserting the sensors in special holes inside the walls. W-C thermocouples were used in the thermoelectric method. The design and calibration of the thermocouples is described. No positive results were obtained because of the mechanical instability of the thermocouples. The method using fuse wires appeared to be the simplest and most convenient. The minimum time required for melting a fuse wire for a given ambient temperature is discussed. It was determined that for wires (copper, iron, molybdenum, tungsten) 1 mm in diameter, this time is less than 1 sec. The temperature at the exit of the tunnel as determined by this method was 1500C. It is concluded that conventional high-temperature measurement methods can be used to measure temperatures of low-velocity hot gas jets not exceeding 2000C. For high-velocity gas jets with temperatures exceeding 2000C optical methods should be used. A list of factors which must be considered when choosing the method of temperature measurement is presented. Orig. art.has: 6 figures, 2 tables, and 2 formulas.

Card 2/3

APPROVED FOR RELEASE: 06/23/11: CIA-RDP86-00513R000617800006-6

APPROVED FOR RELEASE: 06/23/11: CIA-RDP86-00513R000617800006-6

L 5014-66 EWT(1)/EWP(m)/EPA(sp)-2/EWA(d)/EPA(w)-2/T-2/EWA(m)-2/ETC(m) IJP(c)

ACCESSION NR: AP5023724 WW/AT PO/0034/65/000/008/0340/0342

536.5:533.7:621.313.322

AUTHOR: Jasicki, Zbigniew (Professor, Doctor, Engineer); Handke, Adam (Master engineer)

TITLE: Some problems concerning the measurement of temperature of hot gas jets

SOURCE: Pomiary, automatyka, kontrola, no. 8, 1965, 340-342

TOPIC TAGS: gas flow, gas jet, MHD generator, temperature measurement, high temperature research

ABSTRACT: The paper discusses some problems associated with the measurement of temperatures of hot gas jets in the experimental MHD generator of the Poznan Polytechnic Institute. The conditions existing in the tunnel of the generator which seriously hinder the use of conventional methods of measuring high temperatures are listed and discussed. The possibility of using conventional measurement methods in MHD generators was studied using an electric arc inside a plasmotron as a source of temperature. In the optical method an EP-5 monochromatic pyrometer and a Pulfrich photometer were used; the difficulties experienced in applying these instruments for this purpose and the measures taken to circumvent

Card 1/3

APPROVED FOR RELEASE: 06/23/11: CIA-RDP86-00513R000617800006-6

APPROVED FOR RELEASE: 06/23/11: CIA-RDP86-00513R000617800006-6

L 45363-66
ACC NR: AP6026994

2

the hitherto accepted hypothesis of simultaneous creation of true heterocharges and homocharges during the polarization process. The authors are greatly indebted to Professor Stanislaw Glucksman and Professor Tadeusz Piech for their interest in the work and for a number of valuable discussions during its performance. Orig. art. has: 6 figures. [Authors' abstract]

[KS]

SUB CODE: 20/ SUBM DATE: 21Jun65/ ORIG REF: 001/ SOV REF: 002/ OTH REF: 004/

Card 2/2 aum

APPROVED FOR RELEASE: 06/23/11: CIA-RDP86-00513R000617800006-6

APPROVED FOR RELEASE: 06/23/11: CIA-RDP86-00513R000617800006-6

L 45369-66 EWT(1)/T IJP(c) AT

ACC NR: AP6026994 (N) SOURCE CODE: PO/0045/66/029/005/0623/0630 30 28 B

AUTHOR: Handerek, J.; Wilk, R.

ORG: Departments of Experimental Physics, Higher School of Pedagogy, Katowice (Katedra Fizyki Doswiadczalnej Wyzszej Szkoly Pedagogicznej)

TITLE: The influence of storage temperature on the change of polarity of electrets

SOURCE: Acta physica polonica, v. 29, no. 5, 1966, 623-630

TOPIC TAGS: storage temperature, polarity change, electret

ABSTRACT: The influence of the temperature at which electrets of beeswax were stored on the time of transition of a heterocharge into a homocharge has been studied. Increasing the temperature of the electrets before removal of the polarizing electrodes caused an increase in the time after which polarity reversal occurred; a decrease in storage temperature shortened this time. Variations of the storage temperature of electrets after the electrodes had been removed caused the opposite effects of those mentioned above. The results obtained speak against

Card 1/2

APPROVED FOR RELEASE: 06/23/11: CIA-RDP86-00513R000617800006-6

APPROVED FOR RELEASE: 06/23/11: CIA-RDP86-00513R000617800006-6

L 8260-66 EWT(1)/EWP(j)/T IJP(c)/RPL WW/GG/AT/RM

ACCESSION NR: AP5009956 44,55 PO/0045/65/027/002/0259/0265

AUTHOR: Handerek, J. 68

TITLE: On changes in polarity in electrets of certain organic materials

SOURCE: Acta physica polonica, v. 27, no 2, 1965, 259-265

TOPIC TAGS: electret, dielectric material, beeswax, resin, dielectric polarization 21, 44, 55, 15 21, 44, 55

ABSTRACT: The influence of the conditions of polarization and preservation of the electrets of beeswax, pure resin, their mixtures and polymethacrylate on the time of change of polarization and a dielectric delay effect was investigated. The results obtained suggest a certain new point of view on the mechanism of the electret phenomenon, in particular on the extraction homocharge. "The author wishes to thank Professor T. Piech for his kind interest throughout this investigation and for his many valuable discussions." Orig. art. has: 6 figures.

44,55

ASSOCIATION: Department of Physics, Higher Pedagogical College, Katowice. 44,55

SUBMITTED: 15May64 ENCL: 00 SUB CODE: OC

NO REF SOV: 000 OTHER: 000

Card 1/1 BC

APPROVED FOR RELEASE: 06/23/11: CIA-RDP86-00513R000617800006-6

APPROVED FOR RELEASE: 06/23/11: CIA-RDP86-00513R000617800006-6

HANDEREK, J.

On changes in polarity in electrets of certain organic materials. Acta physica Pol 27 no.2:259-265 F '65.

1. Department of Physics of Teachers College, Katowice. Submitted May 15, 1964.

APPROVED FOR RELEASE: 06/23/11: CIA-RDP86-00513R000617800006-6

APPROVED FOR RELEASE: 06/23/11: CIA-RDP86-00513R000617800006-6

HANDEREK, J.; PIECH, T.

On the time of maintainment of heterocharge on wax electrets, as dependent on screening. Acta physica Pol 24 no.3:339-344 S'63.

1. Chair of Physics, Higher Teachers' College, Katowice, and I Chair of Physics, Mining and Metallurgical Academy, Krakow.

APPROVED FOR RELEASE: 06/23/11: CIA-RDP86-00513R000617800006-6

APPROVED FOR RELEASE: 06/23/11: CIA-RDP86-00513R000617800006-6

CRECU, I.; HANDELSMANN, V.; CUREA, E.

Contributions to the study of the reducing action of some organic compounds upon certain ions. I. Action of cryogenin and isoniazid upon the ions Fe^{3+}, Sb^{3+}, Bi^{3+}, Cu^{2+}, Hg_2^{2+}, Hg^{2+}, Ce^{4+}, Au^{3+} and Ag^{+}. Studii cerc chimie Cluj 10 no.2:299-304 '59. (EEAI 9:9)

I.M.F. Cluj - Facultatea de farmacie, Catedra de chimie anorganica.

(Silver) (Organic compounds) (Ions)
(Carbamoylphenylsemicarbazide) (Isoniazid) (Iron)
(Antimony) (Bismuth) (Copper) (Mercury)
(Cerium) (Gold)

APPROVED FOR RELEASE: 06/23/11: CIA-RDP86-00513R000617800006-6

APPROVED FOR RELEASE: 06/23/11: CIA-RDP86-00513R000617800006-6

COUNTRY : Rumania

CATEGORY :

ABS. JOUR. : RZKhim., No. 21 1959, No. 75794

AUTHOR : Grecu, I., Handelsmann, V., and Bucerzan, I.

INST. : Not given

TITLE : A New Rapid Gravimetric Method for the Quantitative Determination of Pyramidine in Preparations or in Pharmaceutic Forms

ORIG. PUB. : Farmacia (RPR), 6, No 6, 499-503 (1958)

ABSTRACT : A new rapid gravimetric method is proposed for the quantitative determination of pyramidine in preparations, tablets, or in mixtures with veronal in 'Veropirin' tablets. The method is based on the precipitation of pyramidine in hot HCl with a 10% aqueous solution of silicotungstic acid. The proposed method is simple and accurate.

From authors' summary

CARD: 1/1

APPROVED FOR RELEASE: 06/23/11: CIA-RDP86-00513R000617800006-6

APPROVED FOR RELEASE: 06/23/11: CIA-RDP86-00513R000617800006-6

RUMANIA/Analytical Chemistry - Analysis of Inorganic Substances. D-2

Abs Jour : Ref Zhur - Khimiya, No 2, 1959, 4295

forming is heated for 5 min over a water bath. After 15-20 min the precipitate is filtered through a No 2 Gooch crucible and washed successively with a solution containing 3% NH_4NO_3 and 0.2% I, water, 95% C_2H_5OH, and ether, after which it is dried in a vacuum-dessicator and weighed. The residue after the water washing can also be dried in a drying oven at 130° and weighed in the form of $Cu[Fe(CN)_5NO]$. The presence of Fe(II), Zn(II), Pb(II), Al(III), Mn(II), Fe(III), Bi(III), Ca(II), Sr(II), and Ba(II) does not interfere with the Cu determination. Ag(I), Hg(II), Cd(II), Ni(II), and Co(II) are precipitated together with Cu(II) and consequently interfere with the determination of the latter. The error of the determination is ± 0.03%. -- B. Manole

Card 2/2

APPROVED FOR RELEASE: 06/23/11: CIA-RDP86-00513R000617800006-6

APPROVED FOR RELEASE: 06/23/11: CIA-RDP86-00513R000617800006-6

RUMANIA/Analytical Chemistry - Analysis of Inorganic Substances, E-2

Abs Jour : Ref Zhur - Khimiya, No 2, 1959, 4295

Author : Grecu, I., Handelsmann, V., Bucerzan, I.

Inst : -

Title : A Novel Rapid Method for Gravimetric Determination of Copper.

Orig Pub : Farmacia (Rumania), 6, No 3, 233-236 (1958) (in Rumanian with summaries in German, English, French, and Russian)

Abstract : Sodium nitroprusside (I) is used for the determination of Cu(II). I and Cu_2 in neutral or weakly acid medium form a light-green precipitate having the composition $Cu[Fe(CN)_5-NO].2H_2O$ which is not readily soluble in water and in acids. The sample to be analyzed (0.01-0.08 gm Cu) is dissolved in 10-20 ml water, 10 ml of a 10% NH_4NO_3 solution are added and the resulting mixture is treated with 3% I solution with constant stirring until a yellow-orange color appears. The solution with the precipitate which is

Card 1/2

APPROVED FOR RELEASE: 06/23/11: CIA-RDP86-00513R000617800006-6

APPROVED FOR RELEASE: 06/23/11: CIA-RDP86-00513R000617800006-6

HANDELSMAN, J

DECEASED

HANDELSMAN, Jozef

Clinical studies on the etiology of schizophrenia. Neur. &q. polska 7 no.4:483-487 Jul-Aug 57.

1. Z Kliniki Psychiatrycznej A. M. w Warszawie Kierownik: prof. J. Handelsman.

(SCHIZOPHRENIA, etiol. & pathogen.
(Pol))

HANDELSMAN, Jozef

Acta medica polonica
Vol. 12 No. 5, 1967 p 601

APPROVED FOR RELEASE: 06/23/11: CIA-RDP86-00513R000617800006-6

APPROVED FOR RELEASE: 06/23/11: CIA-RDP86-00513R000617800006-6

HANDELSMAN, Josef

Development of psychiatry in Poland. Neurologia etc. polska 5 no.1: 17-25 Jan-Feb 55.
(PSYCHIATRY, history
in Poland)

APPROVED FOR RELEASE: 06/23/11: CIA-RDP86-00513R000617800006-6

APPROVED FOR RELEASE: 06/23/11: CIA-RDP86-00513R000617800006-6

HANDELSMAN, J.

Psychic toxic and infectious disorders. Neurol. neurochir. psychiat. polska 2 no. 1:47-48 Jan-Feb 1952. (CLML 22:3)

APPROVED FOR RELEASE: 06/23/11: CIA-RDP86-00513R000617800006-6

APPROVED FOR RELEASE: 06/23/11: CIA-RDP86-00513R000617800006-6

HANDEL, Petru

Low-frequency noise in semiconductors. Studii cerc fiz 13 no. 5: 723-733 '62.

1. Institutul de fizica, Bucuresti.

APPROVED FOR RELEASE: 06/23/11: CIA-RDP86-00513R000617800006-6

APPROVED FOR RELEASE: 06/23/11: CIA-RDP86-00513R000617800006-6

HANDEL, Petru

Relaxation of slow surface states in semiconductors. Studii cerc fiz 12 no.4:753-763 '61.

1. Institutul de fizica, Bucuresti.

APPROVED FOR RELEASE: 06/23/11: CIA-RDP86-00513R000617800006-6

APPROVED FOR RELEASE: 06/23/11: CIA-RDP86-00513R000617800006-6

Country :
CATEGORY :

ABS. JOUR. : RZBiol., No. 1958, No.

[illegible] :

TITLE :

ORIG. PUB. :

ABSTRACT : the authors' experiments were interpreted by them [illegible] terms of the protective and stimulating action of B[illegible] on the central nervous system through the mediation of the hypophysis. -- A.A.Titayev

CARD: 2/2

APPROVED FOR RELEASE: 06/23/11: CIA-RDP86-00513R000617800006-6

APPROVED FOR RELEASE: 06/23/11: CIA-RDP86-00513R000617800006-6

[illegible] : HUNGARY
[illegible] : Pharmacology, Toxicology. Vitamins

[illegible] : RZBiol., No. 12 1958, No. 56715

[illegible] : Mandel, [illegible], Boros, E., Ferenczy, G., [illegible]
[illegible] : Academy of Sciences of Hungary
[illegible] : The Effects of Aneurin on Experimental Neurogenic Hypertension in the Rat

[illegible] : Acta Physiol. Acad. Sci. Hung., 1956, Vol. 9, No. 1-3, 257-266
[illegible] : Under the influence of strong external stimuli (noise, light, electrical shocks), hypertension (BP 160 mm Hg) developed in rats in the course of a 45 day period. The addition to the diet of vitamin B_1 in amounts of 0.2-1.5 mg/100 gm daily in the course of the experimental period reduced the degree of hypertension which developed (BP 14[illegible] mm Hg), whereas the absence of B_1 did not modify it. Single intramuscular injection of B_1 (2 mg/100 gm) to rats with developing hypertension caused a temporary drop in BP of 15 mm Hg in 2 hours, the effect disappearing in 5 hours. The results of
[illegible]D: 1/2

APPROVED FOR RELEASE: 06/23/11: CIA-RDP86-00513R000617800006-6

APPROVED FOR RELEASE: 06/23/11: CIA-RDP86-00513R000617800006-6

HANDEL, M.

3

The effect of dietary sodium-potassium relations on the experimental renal and neurogenic hypertension of the rat. T. Bach, M. Handel, and J. Sós (Univ. Med. School Budapest). Acta Physiol. Acad. Sci. Hung. 19, 137-48 (1961) (in English).—In rats with experi. renal or neurogenic hypertension the elevation of blood pressure occurring on changing the dietary Na/K ratio has been studied. A shift in the ratio at the expense of Na, although not capable of preventing the development of hypertension, moderated the rise in blood pressure. The inhibitory effect of a high-K diet (Na 0 mg., K 9) mg. daily) was more marked in renal than in neurogenic hypertension. A slight elevation of blood pressure was demonstrated in intact rats on a low-K diet (Na 88 mg., K 40 mg. daily). Rachel Brown

APPROVED FOR RELEASE: 06/23/11: CIA-RDP86-00513R000617800006-6

APPROVED FOR RELEASE: 06/23/11: CIA-RDP86-00513R000617800006-6

WEISZ, Karoly, dr.; HANDEL, Magda, dr.; PATAKI, Janos, dr.

Experimental hypertension, induced by asphyxia. Orv. hetil. 97 no.10:263-265 4 March 56.

1. A Budapesti Orvostudomanyi Egyetem Korelettani Intezetenek (igazgato: Sos, Jozsef dr. egyet. tanar) kozlemenye.
(HYPERTENSION, exper.
induction by exper. asphyxia in rats. (Hun))
(ASPHYXIA, exper.
inducing hypertension in rats. (Hun))

APPROVED FOR RELEASE: 06/23/11: CIA-RDP86-00513R000617800006-6

APPROVED FOR RELEASE: 06/23/11: CIA-RDP86-00513R000617800006-6

HANDEL, M

[illegible] Blood pressure determination [illegible] and effect on development of hypertension. [illegible] hypertension. In these experiments [illegible] depressed the elevated blood pressure of [illegible] hypertensive rats. It is assumed that adrenaline and vasopressin [illegible] in the c.n.s. (Orenburg).

A. B. L. Dobrzyk

APPROVED FOR RELEASE: 06/23/11: CIA-RDP86-00513R000617800006-6

APPROVED FOR RELEASE: 06/23/11: CIA-RDP86-00513R000617800006-6

HANDEL-M.

7209. **Experimental hypertension produced by asphyxia.** M. Händel, K. Weisz, and J. Pataki *Acta physiol. Acad. Sci. hung.*, ~~1955,~~ 8, 247—251 (Pathophysiol. Inst. Med. Univ., Budapest, Hungary).—150 g. rats were asphyxiated daily for 28 days, their blood pressure rose from 108 to 150 mm. Hg. During the subsequent 21 days without asphyxia the blood pressure steadily diminished to 128 mm. Hg. The blood pressure varied only slightly around 108 mm. Hg in a control group of rats. When 55 g. rats are asphyxiated for 14 days their adrenals do not hypertrophy. In the kidneys of 7 out of 12 similar rats pathohistological changes were seen. (German)

A. B. L. BEZNÁK.

Med 3

APPROVED FOR RELEASE: 06/23/11: CIA-RDP86-00513R000617800006-6

APPROVED FOR RELEASE: 06/23/11: CIA-RDP86-00513R000617800006-6

BACH, Imre, dr.; HANDEL, Magda, dr.; SOS, Jozsef, dr.

Effect of nutritional sodium-potassium ratio on experimental renal and neurogenic hypertension in rats. Magy. belorv. arch. 8 no.4: 108-111 Aug 55.

1. Fovarosi Peterfy Sandor utcai korhaz-rendelo (Igazgato: Lendvai, Jozsef dr). B. belosztalyanak (foorvos: Bach, Imre dr.) es Egyetemi Korelettani Intezet (Igazgato: Sos, Jozsef dr.) kozlemenye.

(HYPERTENSION, experimental,
eff. of sodium-potassium ratio in food in rats.)
(SODIUM, effects,
on exper. hypertension, sodium-potassium ratio in food.)
(POTASSIUM, effects,
on exper. hypertension, sodium-potassium ratio in food.)

APPROVED FOR RELEASE: 06/23/11: CIA-RDP86-00513R000617800006-6

APPROVED FOR RELEASE: 06/23/11: CIA-RDP86-00513R000617800006-6

BOROSS, Eva; HANDEL, Magda; HERMANN, Gyorgy; WEISZ, Pal

Effect of aneurin on expiremental neurogenic hypertension in rats. Magy. belorv. arch. 8 no.4:97-100 Aug 55.

1. Budapesti Orvostudomanyi Egyetem II. sz. Belklinikajanak (Igazgato: prof. Haynal, Imre) es Korelettani Intezetenek (Igazgato: Prof. Sos, Jozsef) kozlemenye.

(HYPERTENSION, experimental,
eff. of vitamin B1.)
(VITAMIN B1, effects,
on exper. hypertension.)

APPROVED FOR RELEASE: 06/23/11: CIA-RDP86-00513R000617800006-6

APPROVED FOR RELEASE: 06/23/11: CIA-RDP86-00513R000617800006-6

HANDEL, M.

3776. Differences in the food choice of rats in neurogenic and renal hypertension. E. Boros, M. Händel, G. Hermann, and J. Sós *Acta physiol. Acad. Sci. hung.*, 1954, 6, 321—329 (II. Med. Clinic and Inst. of exper. Pathol., Med. Univ., Budapest, Hungary).—Rats with established hypertension either of neurogenic or of renal origin could choose between normal (14% protein), protein-rich (37% protein), protein-free, vitamin B-rich (B_1, B_2, B_6, B_x, vitamin N) added to the normal diet, and vitamin B-poor (normal diet without 3% yeast) diets. Rats in neurogenic hypertension eat significantly more of the B rich diet than do those in renal hypertension. There is no difference in their consumption of fat, carbohydrate, and protein. Renal hypertensive rats eat the same amount of fat, carbohydrate, and protein as normal ones, but their vitamin B-rich diet consumption is small. (German) A. B. L. BERNÁK.

Med 4

APPROVED FOR RELEASE: 06/23/11: CIA-RDP86-00513R000617800006-6

APPROVED FOR RELEASE: 06/23/11: CIA-RDP86-00513R000617800006-6

WEISZ, K.; HANDEL, M.; PATAKY, J.; WEISZ, P.

The elaboration of conditioned reflex in connection with decreased adrenal ascorbic acid caused by asphyxia. Acta physiol. hung. 5 no.3-4:453-456 1954.

1. Pathophysiologisches Institut der Medizinischen Universitat, Budapest. (Eingegangen am 3. Juli 1953)

(ASPHYXIA, exper.
*eff. on vitamin C content of adrenal glands during conditioned reflex in rats)
(REFLEX, CONDITIONED
*in exper. asphyxia, eff. on vitamin C content of adrenal glands. in rats)
(VITAMIN C, metab.
*adrenal glands, eff. of exper. asphyxia in conditioned reflex in rats)

APPROVED FOR RELEASE: 06/23/11: CIA-RDP86-00513R000617800006-6

APPROVED FOR RELEASE: 06/23/11: CIA-RDP86-00513R000617800006-6

TÓTH E., HÁNDEL M. and LUDÁNY G.

Pathophysiol. Inst., med. Univ., Budapest. *Die interozeptive Regulation der Phagozytose von Leikozyten. Interoceptive regulation of the phagocytosis of leucocytes ACTA PHYSIOL. ACAD. SCIENT. HUNG. (Budapest) 1954, 5/suppl. (54)

SO: EXCERPTA MEDICA - Section II, Vol. 7, No. 10

APPROVED FOR RELEASE: 06/23/11: CIA-RDP86-00513R000617800006-6

APPROVED FOR RELEASE: 06/23/11: CIA-RDP86-00513R000617800006-6

HANDEL, M.

(6)

Effect of medication and diet on experimentally produced neurogenic hypertension in rats. M. Händel, P. Kertai, J. Sós, K. Weisz, and I. Balkányi (*Acta physiol. Acad. Sci. hung.*, 1953, 4, 315–322).—The normal blood pressure of 110 mm. Hg rises to above 150 mm. Hg in rats stimulated daily for 40 consecutive days by whistle sound, induction shocks, and strong light for 10 min. each. The neurogenic hypertension persists for 2 to 4 weeks after the cessation of the stimulation. Simultaneous administration of Tetracor (penta-methylentetrazol) increases hypertension, it prolongs the rise. Tetracor alone causes no hypertension. Rats on methionine- and trytophane-free diets do not develop hypertension by these treatments, but hypertension develops when they are given a complete diet. Hypertension does not develop or is small if Sevenal is given to rats during the 40 days period of stimulation.

A. B. L. Beznák.

APPROVED FOR RELEASE: 06/23/11: CIA-RDP86-00513R000617800006-6

APPROVED FOR RELEASE: 06/23/11: CIA-RDP86-00513R000617800006-6

C.A.

HANDEL, I.

1

An ideal birectifier. István Handel. *Magyar Kém. Lapja* 4, 418-20(1949).—Two reflux coolers are located above each other. The vapors of the substance are condensed first in the higher cooler, then they are introduced into the lower cooler by a U-shaped tube. The app. is also available for vacuum work. István Finály

APPROVED FOR RELEASE: 06/23/11: CIA-RDP86-00513R000617800006-6

APPROVED FOR RELEASE: 06/23/11: CIA-RDP86-00513R000617800006-6

HANDA, Karel, inz.

"Textbook of thermal processes for the fourth year of the secondary industrial schools of food technology." Pt.2. Reviewed by Karal Handa. Prum potravin 15 no.12:652 D '64.

APPROVED FOR RELEASE: 06/23/11: CIA-RDP86-00513R000617800006-6

APPROVED FOR RELEASE: 06/23/11: CIA-RDP86-00513R000617800006-6

HANCZYC, Piotr

Post-cortisone destruction of the ocular tissue. Klin.oczna 34 no.1:23-28 '64.

1. Z Kliniki Chorob Oczu AM we Wroclawiu; kierownik: prof.dr. med. W.J.Kapuscinski.

*

APPROVED FOR RELEASE: 06/23/11: CIA-RDP86-00513R000617800006-6

APPROVED FOR RELEASE: 06/23/11: CIA-RDP86-00513R000617800006-6

HANCZYC, Piotr

Clinical value of different methods of intracapsular cataract extraction. Klin. oczna 33 no.2 171-176 '63.

1. Z Kliniki Chorob Oczu AM we Wrocławiu Kierownik: prof. dr med. W.J. Kapuscinski.
(CATARACT EXTRACTION)

APPROVED FOR RELEASE: 06/23/11: CIA-RDP86-00513R000617800006-6

APPROVED FOR RELEASE: 06/23/11: CIA-RDP86-00513R000617800006-6

HANCZYC, Piotr; GRENIK-ZAJAC, Walentyna

Post-influenzal abscess of the ciliary body and sclera (perforation of the sclera and prolapse of the lens). Pol. tyg.lek. 18 no.51:1929-1930 16 D'63

1. Z Kliniki Ocznej AM we Wroclawiu; kierownik: prof. dr. W.J.Kapuscinski.

*

APPROVED FOR RELEASE: 06/23/11: CIA-RDP86-00513R000617800006-6

APPROVED FOR RELEASE: 06/23/11: CIA-RDP86-00513R000617800006-6

KAPUSCINSKI, Witold J.; HANCZYC, Piotr

Further observations on the use of α-chymotrypsin in cataract operations. Klin. oczna 32 no.3:287-294 '62.

1. Z Kliniki Ocznej AM we Wroclawiu Kierownik: prof. dr med. W.J. Kapuscinski.

(CHYMOTRYPSIN) (CATARACT EXTRACTION)

APPROVED FOR RELEASE: 06/23/11: CIA-RDP86-00513R000617800006-6

APPROVED FOR RELEASE: 06/23/11: CIA-RDP86-00513R000617800006-6

HANCZYC, Piotr

Ocular manifestations in pulseless disease (Takayasu syndrome). Klin. oczna 31 no.4:423-430 '61.

1. Z Kliniki Ocznej AM we Wroclawiu Kierownik: prof. dr med. W. J. Kapuscinski.

(AORTA dis) (EYE dis)

APPROVED FOR RELEASE: 06/23/11: CIA-RDP86-00513R000617800006-6

APPROVED FOR RELEASE: 06/23/11: CIA-RDP86-00513R000617800006-6

KAPUSCINSKI, Witold J.; ANDRZEJEWSKI, Feliks; BRODZIAK-KRZESIEKOWA, Kazimiera; oraz wspolpr.: DROZDOWSKA, S.; HANCZYC, P.; HUSZCZA, A.; ILCZYSZYNSKA, H.; CZEREK-JAGUCZANSKA, H.; KRUDYSZ, J.; PACYNSKA, J.; WOZNIAKOWA, I.

Problem of the evolution of some eye diseases in Poland according to material of the Wroclaw clinic. Klin.oczna 31 no.4:411-422 '61.

1. Z Kliniki Ocznej AM we Wroclawiu Kierownik: prof. dr med. W. J. Kapuscinski Z Katedry Maszyn Elektrycznych Politechniki Wroclawskiej Kierownik: prof. dr inz. F. Andrzejewski.

(OPHTHALMOLOGY)

APPROVED FOR RELEASE: 06/23/11: CIA-RDP86-00513R000617800006-6

APPROVED FOR RELEASE: 06/23/11: CIA-RDP86-00513R000617800006-6

HANCZYC, Piotr

Behavior of capillary resistance during stimulant therapy with typhoid vaccine. Klin.oczna 30 no.3:255-267 '60.

1. Z Kliniki Chorob Oczu A.M. we Wroclawiu Kierownik: prof. dr med. W.J.Kapuscinski.
(TYPHOID immunol)
(VACCINATION)
(CAPILLARIES physiol)

APPROVED FOR RELEASE: 06/23/11: CIA-RDP86-00513R000617800006-6

APPROVED FOR RELEASE: 06/23/11: CIA-RDP86-00513R000617800006-6

KAPUSCINSKI, Witold J.; HANCZYC, Piotr

Role of alpha chymotrypsin in cataract surgery. Klin.oczna 30 no.1: 21-26 '60.

1. Z Kliniki Ocznej A.M. we Wroclawiu. Kierownik: prof.dr med. W.J. Kapuscinski.

(CATARACT EXTRACTION)
(CHYMOTRYPSINS ther.)

APPROVED FOR RELEASE: 06/23/11: CIA-RDP86-00513R000617800006-6

APPROVED FOR RELEASE: 06/23/11: CIA-RDP86-00513R000617800006-6

OKNIŃSKA, Anna; HANCZKE-WOJNAROWSKA, Halina

Diagnostic difficulties in mucoviscidosis. Pediat. Pol. 40 no.9:967-972 S '65.

1. Z Kliniki Diagnostyki Chorób Dzieci AM w Warszawie (Kierownik: dr. med. Z. Lejmbach).

APPROVED FOR RELEASE: 06/23/11: CIA-RDP86-00513R000617800006-6

APPROVED FOR RELEASE: 06/23/11: CIA-RDP86-00513R000617800006-6

HANCZKE, Teresa

Occurrence of bromine in the Zechstein salt series in the Paslek and Bartoszyce IG I boreholes. Kwartalnik geol 6 no.2:418 '62.

1. Zaklad Zloz Ropy, Soli i Surowcow Chemicznych, Instytut Geologiczny, Warszawa.

APPROVED FOR RELEASE: 06/23/11: CIA-RDP86-00513R000617800006-6

APPROVED FOR RELEASE: 06/23/11: CIA-RDP86-00513R000617800006-6

HANCZKE, Teresa

Occurrence of boron in salt formations. Kwartalnik geol 5 no.4:963 '61.

1. Zaklad Zloz Ropy, Soli i Surowcow Chemicznych, Instytut Geologiczny, Warszawa.

APPROVED FOR RELEASE: 06/23/11: CIA-RDP86-00513R000617800006-6

APPROVED FOR RELEASE: 06/23/11: CIA-RDP86-00513R000617800006-6

HUNGARY

HANCSOK, Marius, Dr, CZEIZEL, Endre, Dr; Capital City Council Janos Hospital, II. Obstetrical Ward (Fovarosi Tanacs Janos Korhaz, II. Szuleszeti Osztaly), and National Public Health Institute (Orszagos Kozegeszsegugyi Intezet).

"On the Pathogenesis of Fetal Damage"

Budapest, Orvosi Hetilap, Vol 107, No 12, 20 Mar 66, pages 539-543.

Abstract: Some of the factors which may contribute to fetal damage are evaluated briefly. Among these are the effects of previous instrumental abortion, microbiological causes, alcohol-coffee-smoking, ABO blood group incompatibility, the time of conception and pathospermia. 16 Hungarian, 24 Western references.

1/1

APPROVED FOR RELEASE: 06/23/11: CIA-RDP86-00513R000617800006-6

APPROVED FOR RELEASE: 06/23/11: CIA-RDP86-00513R000617800006-6

ZOLTAI, Nandor, dr.; JANKO, Maria, dr.; HANCSOK, Mariusz, dr.; PALKOVICH, Imre, dr.; CZEIZEL, Endre, dr.

Simultaneous occurrence of amebiasis and fetal diseases. Orv. hetil. 106 no.45:2125-2127 7 N '65.

1. Orszagos Kozegeszsegugyi Intezet, Parazitologiai Osztaly (foigazgato: Bakacs, Tibor, dr.) es Fovarosi Tanacs Janes Korhaz, II. Szuleszeti Osztaly (foorvos: Hancsok, Mariusz, dr.).

APPROVED FOR RELEASE: 06/23/11: CIA-RDP86-00513R000617800006-6

APPROVED FOR RELEASE: 06/23/11: CIA-RDP86-00513R000617800006-6

CZEIZEL, Endre, dr.; BOGNAR, Zoltan, dr.; HANCSOK, Mariusz, dr.; ZOLTAI, Nandor, dr.; JANKO, Maria, dr.; ZOLTAI, Laszlo, dr.

Toxoplasmosis in pregnancy. Orv. hetil. 105 no.27:1259-1265 5 Jl'64.

1. Orszagos Kozegeszsegugyi Intezet es Fovarosi Tanacs Janos Korhaz, II. Szuleszeti Osztaly.

APPROVED FOR RELEASE: 06/23/11: CIA-RDP86-00513R000617800006-6

APPROVED FOR RELEASE: 06/23/11: CIA-RDP86-00513R000617800006-6

CZELIK, Andor, dr.; GUNCSOS, Marton, dr.; [illegible]

Influenza and pregnancy. [illegible]

1. Orszagos Kozegeszsegugyi Intezet [illegible]
dr. [illegible] Kovarosi Tanacs Kozegeszsegugyi [illegible]
(Footvos: Hamvas Mariusz [illegible])

APPROVED FOR RELEASE: 06/23/11: CIA-RDP86-00513R000617800006-6

APPROVED FOR RELEASE: 06/23/11: CIA-RDP86-00513R000617800006-6

JULESZ, M.; CZEIZEL, E.; BOGNAR, E.; HANCSOK, M.; ZOLTAI, N.; ZOLTAI, L.; JANKO, M.

Toxoplasmosis as a cause of adiposogenital dystrophy. Orv. hetil. 105 no.36:1723 6 S '64.

APPROVED FOR RELEASE: 06/23/11: CIA-RDP86-00513R000617800006-6

APPROVED FOR RELEASE: 06/23/11: CIA-RDP86-00513R000617800006-6

CZEIZEL, Endre, dr.; HANCSOK, Mariusz, dr.; PALKOVICH, Imre, dr.

The role of lynph circulation in the transportation of estrogens. Orv.hetil. 105 no.5:208-209 2F '64.

1. Orszagos Kozegeszsegügyi Intezet (Föigazgato: Bakacs Tibor dr.), Korelettani Osztaly (Oszt. vezeto: Kertai Pal dr.) es Fovarosi Tanacs Janos Korhaz, II. Szulesseti Osztaly (Fövaros: Hancsok Mariusz dr.).

*

APPROVED FOR RELEASE: 06/23/11: CIA-RDP86-00513R000617800006-6

APPROVED FOR RELEASE: 06/23/11: CIA-RDP86-00513R000617800006-6

HANCSOK, Mariusz, dr.; BOGNAR, Zoltan, dr.; CZEIZEL, Endre, dr.

Evaluation of our cases suggesting toxoplasmosis. Magy.noorv. lap. 27 no.1:13-18 J '64.

1. Budapest Fovarosi Tanacs Janos Korhaz (Igazgato: Tako Jozef dr.) II. Szuleszeti Osztely (Foorvos: Hancsok Mariusz dr.) es az orszagos Kozegeszscegugyi Intezet (Foigazgato: Prof. Bakacs Tibor dr.) kozlemenye.

APPROVED FOR RELEASE: 06/23/11: CIA-RDP86-00513R000617800006-6

APPROVED FOR RELEASE: 06/23/11: CIA-RDP86-00513R000617800006-6

PALKOVICH, Imre, dr.; HANCSOK, Mariusz, dr.; CZEIZEL, Endre, dr.

Etiology of follicular cysts. Magy.noorv.lap. 26 no.4:228-233 Jl '63.

1. A Budapesti Fővarosi Tanacs Janos Korhaza (igazgato: Tako Jozsef dr.) II. Szüleszeti Osztalyanak (Főorvos: Hancsok Mariusz dr.) közlemenye.

APPROVED FOR RELEASE: 06/23/11: CIA-RDP86-00513R000617800006-6

APPROVED FOR RELEASE: 06/23/11: CIA-RDP86-00513R000617800006-6

BOGNAR, Zoltan, dr.; CZEIZEL, Endre, dr.; HANCSOK, Mariusz, dr.

Retrospective evaluation of 500 cases in determining the cause of spontaneous abortion. Magy. noorv. lap. 26 no.1:58-64 Ja '63.

1. Budapesti Fovarosi Tanacs Janos Korhaza (Igazgato: Tako Jozsef dr.) II. Szuleszeti Osztalyanak (Foorvos: Hancsok Mariusz dr.) kozlemenye. (ABORTION)

APPROVED FOR RELEASE: 06/23/11: CIA-RDP86-00513R000617800006-6

APPROVED FOR RELEASE: 06/23/11: CIA-RDP86-00513R000617800006-6

BOGNAR, Zoltan, dr.; CZEIZEL, Endre, dr.; HANCSOK, Mariusz, dr.; HEGYESI, Gyula, dr.

Results obtained in the listerosis screening test in an obstetrical ward. Orv. hetil. 103 no.44:2079-2081 4 N '62.

1. Fovarosi Tanacs Janos Korhaz, II. Szuleszeti Osztaly es Orszagos Kozegeszsegugyi Intezet.
(LISTERIA INFECTIONS) (PREGNANCY COMPLICATIONS)

APPROVED FOR RELEASE: 06/23/11: CIA-RDP86-00513R000617800006-6

APPROVED FOR RELEASE: 06/23/11: CIA-RDP86-00513R000617800006-6

HANCSOK, Mariusz, dr.; VICTOR, Agoston, dr.

Experience with meprobamate (andaxin) in the treatment of premenstrual tension. Orv.hetil. 101 no.45:1607-1608 6 N '60.

1. Budapest Fovarosi Tanacs Janos Korhaz II. Szuleszeti Osztalya.
(MEPROBAMATE ther)
(MENSTRUATION DISORDERS ther)

APPROVED FOR RELEASE: 06/23/11: CIA-RDP86-00513R000617800006-6

APPROVED FOR RELEASE: 06/23/11: CIA-RDP86-00513R000617800006-6

CSAKY, Gyorgy; HANCSOK, Marius; NAGY, Istvan; CSEH, Gyorgy

Therapeutic experiments in connection with zymosan therapy of late toxemias (preliminary report). Magy.noorv.lap. 20 no.6: 373-375 N '59.

1. Fovarosi Janos korhaz II. szuleszeti es nogyogyaszati osztalyanak kozlemenye (Igazgato: Tako Jozsef dr. Oszt. vez. foorvos: Hancsok Marius dr.).

(PREGNANCY TOXEMIAS ther)
(POLYSACCHARIDES ther)

APPROVED FOR RELEASE: 06/23/11: CIA-RDP86-00513R000617800006-6

APPROVED FOR RELEASE: 06/23/11: CIA-RDP86-00513R000617800006-6

L 64011-65

ACCESSION NR: AP5020705

ASSOCIATION: Vysoka skola banska, Ostrava (Mining College)

SUBMITTED: 00 ENCL: 00 SUB CODE: MM, IE

NO REF SOV: 000 OTHER: 003 JPRS

Card 2/2

APPROVED FOR RELEASE: 06/23/11: CIA-RDP86-00513R000617800006-6

APPROVED FOR RELEASE: 06/23/11: CIA-RDP86-00513R000617800006-6

L 64011-65

ACCESSION NR: AP5020701 CZ/0057/64/000/012/0576/0578

AUTHOR: Hancl, Jaroslav (Engineer, Candidate of sciences)

12
B

TITLE: Intensification of the agglomeration process

SOURCE: Hutnik, no. 12, 1964, 576-578

TOPIC TAGS: metallurgic process, automation

Abstract: Improvement of the agglomeration process is achieved mainly by maintaining constant operating conditions. The importance of maintaining constant bulk density on the belt in charging devices and on the grate are discussed. Changes in the thermal parameters of operating conditions are evaluated. Factors disturbing the temperature profile are described. Changes in basic properties of raw materials and of the amount of fuel needed are discussed. Influence of recirculating part of the agglomerate is described. Causes of interruptions in the operating process are discussed. Instrumentation and automation of the process is evaluated.

Card 1/2

APPROVED FOR RELEASE: 06/23/11: CIA-RDP86-00513R000617800006-6

APPROVED FOR RELEASE: 06/23/11: CIA-RDP86-00513R000617800006-6

HANCL, Jaroslav, inz.

Preparation of lump-charge for blast furnaces. Hut listy 18 no.6:429-431 Je '63.

1. Vysoka skola banska, Ostrava.

APPROVED FOR RELEASE: 06/23/11: CIA-RDP86-00513R000617800006-6

APPROVED FOR RELEASE: 06/23/11: CIA-RDP86-00513R000617800006-6

L 34923-66 EWT(m)/EWP(t)/ETI IJP(c) JD

ACC NR: AP6026623 SOURCE CODE: CZ/0034/66/000/004/0229/0233

AUTHOR: Hancl, Jaroslav (Docent; Engineer); Scholz, Rudolf (Engineer); Jasiok, K. (Engineer)

ORG: [Hancl] College of Mining, Ostrava (Vysoka skola banska); [Scholz; Jasiok] NHKG, Ostrava

TITLE: Investigation of some relations between various indices of the sintering processes

SOURCE: Hutnicke listy, no. 4, 1966, 229-233

TOPIC TAGS: sintering, computer, metallurgic research/Sirius computer

ABSTRACT: 22 variables of the agglomeration process at the NHKG works were investigated; comparison of records showed that a ten day period provided data that were not subject to variations. These data were investigated by the method of regression analysis. The data were then processed in a Sirius computer; 17 input and 5 output indicators were recorded. The results obtained in the study are discussed and the importance of the individual factors presented. Orig. art. has: 5 tables. [Based on authors' Eng. abst.] [JPRS: 36,646]

SUB CODE: 13, 09 / SUBM DATE: none / ORIG REF: 002 / SOV REF: 003

Card 1/1 UDC: 622.785 669.162.13

APPROVED FOR RELEASE: 06/23/11: CIA-RDP86-00513R000617800006-6

APPROVED FOR RELEASE: 06/23/11: CIA-RDP86-00513R000617800006-6

HANCL, Jaroslav, inz.

Thermal conditions in ore agglomeration on an agglomeration belt. Hut listy 17 no.12:839-841 D '62.

1. Vysoka skola banska, Ostrava.

APPROVED FOR RELEASE: 06/23/11: CIA-RDP86-00513R000617800006-6

APPROVED FOR RELEASE: 06/23/11: CIA-RDP86-00513R000617800006-6

HANCIULESCU, T., ing.; POPESCU, C., ing.

New methods and techniques in processing crude oil and their economic results. Petrol si gaze 15 no.2:93-99 F '64.

APPROVED FOR RELEASE: 06/23/11: CIA-RDP86-00513R000617800006-6

APPROVED FOR RELEASE: 06/23/11: CIA-RDP86-00513R000617800006-6

HANCIULESCU,T., ing.

Recovery term of investment funds in the crude oil extracting industry. Petrol si gaze 14 no.6:314-316 Je'63.

APPROVED FOR RELEASE: 06/23/11: CIA-RDP86-00513R000617800006-6

APPROVED FOR RELEASE: 06/23/11: CIA-RDP86-00513R000617800006-6

HANCIULESCU, T., ing.; POPESCU, C., ing.

Complexity of refining plants. Petrol si gaze 14 no.7:363-369 Jl '63.

APPROVED FOR RELEASE: 06/23/11: CIA-RDP86-00513R000617800006-6

APPROVED FOR RELEASE: 06/23/11: CIA-RDP86-00513R000617800006-6

HANCIULESCU, T., ing.

Term for recovering the investments and its peculiarities in the oil industry. Petrol si gaze 13 no.7:289-294 Jl '62.

1. Ministerul Industriei Petrolului si Chimiei.

APPROVED FOR RELEASE: 06/23/11: CIA-RDP86-00513R000617800006-6

APPROVED FOR RELEASE: 06/23/11: CIA-RDP86-00513R000617800006-6

HANCIULESCU, T., ing.

Possible criteria for the calculus of the economic effectiveness of automation in crude oil and gas extraction. Petrol si gaze 13 no.6:241-243 Je '62.

1. Ministerul Industriei Petrolului si Chimiei.

APPROVED FOR RELEASE: 06/23/11: CIA-RDP86-00513R000617800006-6

APPROVED FOR RELEASE: 06/23/11: CIA-RDP86-00513R000617800006-6

HANCIULESCU, T., ing.

Planning the capital repair of oil wells. Petrol si gaze 12 no.10: 435-439 O '61.

(Oil wells--Repairing)

APPROVED FOR RELEASE: 06/23/11: CIA-RDP86-00513R000617800006-6

APPROVED FOR RELEASE: 06/23/11: CIA-RDP86-00513R000617800006-6

HANCIULESCU, T., ing.

Economic efficiency of the investments in petroleum industry. Petrol si gaze 11 no.3:99-106 Mr '60.

(Petroleum industry) (Industrial management)

APPROVED FOR RELEASE: 06/23/11: CIA-RDP86-00513R000617800006-6

APPROVED FOR RELEASE: 06/23/11: CIA-RDP86-00513R000617800006-6

MANCIULESCU, T.

Labor productivity in the petroleum extractive industry. p. 373.

PETROL SI GAZE. (Asociatia Stiintificia a Inginerilor si Technicienilor din Rominia si Ministerul Industriei Petrolului si Chimiei) Bucuresti Rumania. Vol. 10, no.9, 1959

Monthly list of East European Accessions (EEAI) LC Vol. 9, no. 2 Feb. 1960

Uncl.

APPROVED FOR RELEASE: 06/23/11: CIA-RDP86-00513R000617800006-6

APPROVED FOR RELEASE: 06/23/11: CIA-RDP86-00513R000617800006-6

[illegible], C.

The economic limit of the exploitation of a well. p. 170.

PETROL I GAZE. (Asociatia Stiintifica [illegible] Societatea Romana de Geologie a Ministerul Industriei Petrolului) Bucuresti, romania Vol. 10, no. 4, Apr. 1959.

Vol 8

Monthly List of East European Accessions (EEAI) LC, Vol. [illegible], No. [illegible], 1960

Unclassified.

APPROVED FOR RELEASE: 06/23/11: CIA-RDP86-00513R000617800006-6

APPROVED FOR RELEASE: 06/23/11: CIA-RDP86-00513R000617800006-6

RUMANIA / Chemical Technology. Chemical Products and Their Applications. Chemical Processing of Natural Gases and Petroleum. Motor and Rocket Fuel Lubricants. H-23

Abs Jour: Ref Zhur-Khimiya, No 3, 1959, 9658.

Abstract: for future increase in cracking capacity of the petroleum industry it is necessary to build combined installations of greater power and to develop petroleum-chemical production. -- G. Margolina.

Card 2/2

APPROVED FOR RELEASE: 06/23/11: CIA-RDP86-00513R000617800006-6

APPROVED FOR RELEASE: 06/23/11: CIA-RDP86-00513R000617800006-6

RUMANIA / Chemical Technology. Chemical Products and Their Applications. Chemical Processing of Natural Gases and Petroleum. Motor and Rocket Fuel Lubricants. H-23

Abs Jour: Ref Zhur-Khimiya, No 3, 1959, [illegible].

Author : Hanciulescu, T.
Inst : Not given.
Title : Importance of National Mastery of Petroleum Resources for Increasing the Profitability of the Petroleum Industry.

Orig Pub: Probl. econ. (Romin.), 1958, 11, No 4, 21-31, 135-136.

Abstract: Significant achievements are noted of the petroleum industry in Rumania during the peoples' [illegible] of petroleum during 1951-1957 [illegible] times. It is pointed out that

Card 1/2

/25

APPROVED FOR RELEASE: 06/23/11: CIA-RDP86-00513R000617800006-6

APPROVED FOR RELEASE: 06/23/11: CIA-RDP86-00513R000617800006-6

HANCIULESCU, T.

Calculation of the profitableness of capital repairs for petroleum wells. p. 101

PETROL SI GAZE, Bucuresti, Vol 7, No. 2, Feb., 1956

SO: East European Accessions List (EEAL) Library of Congress, Vol 5, No. 7, July, 1956

APPROVED FOR RELEASE: 06/23/11: CIA-RDP86-00513R000617800006-6

APPROVED FOR RELEASE: 06/23/11: CIA-RDP86-00513R000617800006-6

HANCIULESCU, T.

HANCIULESCU, T. Economic efficiency of turbine boring. p. 346.

Vol. 6, no. 11, Nov. 1956
ROMANIAN-SOVIET friendship
Bucuresti, Romania

So: Eastern European Accession Vol. 5 No. 4 April, 1956

APPROVED FOR RELEASE: 06/23/11: CIA-RDP86-00513R000617800006-6

APPROVED FOR RELEASE: 06/23/11: CIA-RDP86-00513R000617800006-6

HANCIULESCU, T.

HANCIULESCU, T. For reduction of the cost price of boring shafts. p. 458.

Vol. 6, no. 10, Oct. 1955
RUMANIAN- SOVIET friendship
Bucuresti, Rumania

So: Eastern European Accession Vol. 5 No. 4 April 1956

APPROVED FOR RELEASE: 06/23/11: CIA-RDP86-00513R000617800006-6

APPROVED FOR RELEASE: 06/23/11: CIA-RDP86-00513R000617800006-6

ILLEGIBLE

APPROVED FOR RELEASE: 06/23/11: CIA-RDP86-00513R000617800006-6

APPROVED FOR RELEASE: 06/23/11: CIA-RDP86-00513R000617800006-6

HANCINSKY, L.

"Evaluation of the natural regeneration in the forest growths of the Stiavnica Forest Enterprise"

Lesnicky Casopis. Bratislava, Czechoslovakia. Vol. 5, no. 1, 1959

Monthly list of East European Accessions (EEAI), LC, Vol. 8, No. 6, Jun 59, Unclas

APPROVED FOR RELEASE: 06/23/11: CIA-RDP86-00513R000617800006-6

APPROVED FOR RELEASE: 06/23/11: CIA-RDP86-00513R000617800006-6

[illegible], L.

[illegible]

[illegible] L.5, no. [illegible], Feb. [illegible]

Hancinsky, L. Possibilities of natural regeneration of [illegible] in forest types of the Banska Stiavnica Forest Enterprise. p. [illegible].

Monthly List of East European Accessions (EEAI) LC, Vol. [illegible], no. [illegible], May [illegible], Unclass.

APPROVED FOR RELEASE: 06/23/11: CIA-RDP86-00513R000617800006-6

APPROVED FOR RELEASE: 06/23/11: CIA-RDP86-00513R000617800006-6

HANCIL, Jan, Ing., TAUCHMAN, Vladimil

Operational experience with the superiority in making trunk fiberboard. Papir a celulosa 19 no.2:39-40 F'64.

1. Severoceske papirny, Hostinne.

APPROVED FOR RELEASE: 06/23/11: CIA-RDP86-00513R000617800006-6

APPROVED FOR RELEASE: 06/23/11: CIA-RDP86-00513R000617800006-6

HANCIL, Jan, inz.; SOBOTKA, Vaclav

Some causes of nonuniform gray staining of photographic paper and improvement of the production technology. Papir a celulosa 18 no.11:218-220 N'63.

1. Krkonosske papirny, Hostinne.

APPROVED FOR RELEASE: 06/23/11: CIA-RDP86-00513R000617800006-6

APPROVED FOR RELEASE: 06/23/11: CIA-RDP86-00513R000617800006-6

HANCIL, Jan, inz.

Black overlay paper for laminate plates. Papir a celulosa 19 no. 1:19-20 Ja '64.

1. Krkonosske papirny, Hostinne.

APPROVED FOR RELEASE: 06/23/11: CIA-RDP86-00513R000617800006-6

APPROVED FOR RELEASE: 06/23/11: CIA-RDP86-00513R000617800006-6

HANCIL, Jan, inz.; JOBOTKA, Vaclav

Improvement of mechanical properties of photocardboard.
Papir a celulosa 18 no.9:192 S '63.

1. Krkonosske papirny.

APPROVED FOR RELEASE: 06/23/11: CIA-RDP86-00513R000617800006-6

APPROVED FOR RELEASE: 06/23/11: CIA-RDP86-00513R000617800006-6

HANCI, Jan, [illegible] 1957, [illegible]

[illegible] mining enterprise. Pair a [illegible]

1. Kokomoske pairing, Hesitino.

APPROVED FOR RELEASE: 06/23/11: CIA-RDP86-00513R000617800006-6

APPROVED FOR RELEASE: 06/23/11: CIA-RDP86-00513R000617800006-6

[illegible], F., [illegible]

[illegible]

[illegible] (Abstracts [illegible]), Zentralblatt, Vol. 24, no. 16, Oct. 1957

Monthly List of East European Accession (MLEE) 16, Vol. 9, no. 1, Jan. 1960

Uncl.

APPROVED FOR RELEASE: 06/23/11: CIA-RDP86-00513R000617800006-6

APPROVED FOR RELEASE: 06/23/11: CIA-RDP86-00513R000617800006-6

HANCIL, J.

"Tracing paper from hardwood pulp."

PAPIR A CELULOSA, Praha, Czechoslovakia, Vol. 14, No. 7, July 1959.

Monthly List of East European Accessions (EEAI), LC, Vol. 8, No. 9, September 1959.

Unclassified.

APPROVED FOR RELEASE: 06/23/11: CIA-RDP86-00513R000617800006-6

APPROVED FOR RELEASE: 06/23/11: CIA-RDP86-00513R000617800006-6

Z/014/62/000/002/002/003
E192/E382

Portable telephonometer

attenuation meter comprises two amplifier stages and a circuit for the evaluation of the relative attenuation, which is based on copper-oxide rectifiers and resistors. The above telephonometer is primarily designed for servicing and maintenance of telephone sets. The equipment is supplied from two batteries, giving 4.5 and 8 to 9 V.
There are 4 figures and 4 Soviet-bloc references.

Fig. 3:

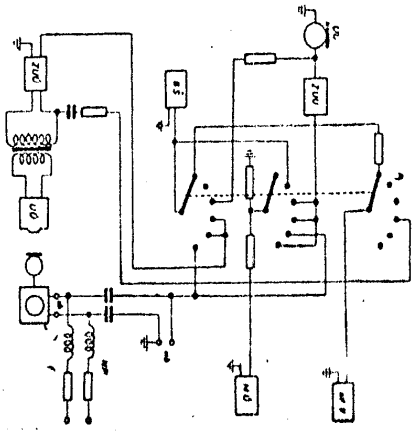

Card 3/3

APPROVED FOR RELEASE: 06/23/11: CIA-RDP86-00513R000617800006-6

APPROVED FOR RELEASE: 06/23/11: CIA-RDP86-00513R000617800006-6

Z/014/62/000/002/002/003
E192/E382

Portable telephonometer

artificial mouth, UÚ is the artificial mouth, nf V is a low-frequency voltmeter, MU is the relative attenuation meter, NP is the supply bridge, P_1 is a six-way switch, mb are the terminals for connecting a telephone set of the local-battery type and ub are the terminals for connecting a central-battery telephone set. The artificial ear is permanently built into the cabinet and it is covered by a special lid when not in use. The noise-generator is based on a germanium junction diode which is followed by a 5-stage transistor amplifier. The artificial mouth has an input aperture of 2.5 cm and an external diameter of 10 cm. The source of sound in the artificial mouth is a loudspeaker, type ARO 131. The frequency of the artificial mouth over the bandwidth ranging from 230 - 4 000 c.p.s. does not vary by more than ± 4 db. The artificial ear is of the type recommended by CCITT. The amplifier of the artificial mouth is based on 3 transistors, the first of which operates as a pre-amplifier, the remaining two being connected as a push-pull output stage, the amplifier of the artificial ear is a 4-stage system with resistive inter-stage coupling. The relative

Card 2/3

APPROVED FOR RELEASE: 06/23/11: CIA-RDP86-00513R000617800006-6

APPROVED FOR RELEASE: 06/23/11: CIA-RDP86-00513R000617800006-6

Z/014/62/000/002/002/003
E192/E382

AUTHORS: Hančík, Josef, and Turko, Václav, Engineers

TITLE: Portable telephonometer

PERIODICAL: Sdělovací technika, no. 2, 1962, 60 - 61

TEXT: The equipment described is housed in a portable cabinet, 275 x 205 x 115 mm in size and 6.5 kg in weight). The effect of the human voice is imitated by means of a noise generator and when testing microphones the noise is reproduced by an artificial mouth; the signal from the noise generator is applied to the tested telephone set when measuring the receivers. The acoustical signal from the measured receiver is applied to an artificial ear and, after suitable amplification, it is applied to the input of a relative attenuation meter. The electronic part of the instrument is constructed as printed circuits and is based on transistors. The system is illustrated diagrammatically in Fig. 3, where UU is the artificial ear, ZUU is the amplifier of the artificial ear, GŠ is the noise-generator, ZUŮ is the amplifier of the

Card 1/3

APPROVED FOR RELEASE: 06/23/11: CIA-RDP86-00513R000617800006-6

APPROVED FOR RELEASE: 06/23/11: CIA-RDP86-00513R000617800006-6

HANCEVIC, J.; PLESKO, N.; JANJIC, I.

The influence of the weather factor on the pathogenesis of pulmonary embolism. Acta med. Iugosl. 19 no.1:42-61 '65.

APPROVED FOR RELEASE: 06/23/11: CIA-RDP86-00513R000617800006-6

APPROVED FOR RELEASE: 06/23/11: CIA-RDP86-00513R000617800006-6

HANCEVIC, J.

Operating table for newborn infants. Acta chir. Iugosl. 11 no.1:79-80 O '64.

1. Kirurska klinika Medicinskog fakulteta u Zagrebu (Predstojnik prof. dr H. Juzbasic).

APPROVED FOR RELEASE: 06/23/11: CIA-RDP86-00513R000617800006-6

APPROVED FOR RELEASE: 06/23/11: CIA-RDP86-00513R000617800006-6

HANC, V.

Adjustment of a flax puller. p.306.
(Mechanisace Zemedelstvi, Vol. 7, No. 13, July 1957, Praha, Czechoslovakia)

SO: Monthly List of East European Accessiors (EEAL) LC. Vol. 6, No. 9, Sept. 1957. Uncl.

APPROVED FOR RELEASE: 06/23/11: CIA-RDP86-00513R000617800006-6

APPROVED FOR RELEASE: 06/23/11: CIA-RDP86-00513R000617800006-6

HANC, V.

Leaf guard, p. 229. (Mechanisace Zemedelstvi, Vol. 7, No. 10, May 1957, Praha, Czechoslovakia)

SO: Monthly List of East European Accessions (EEAL) LC, Vol. 6, No. 8, Aug 1957. Uncl.

APPROVED FOR RELEASE: 06/23/11: CIA-RDP86-00513R000617800006-6

APPROVED FOR RELEASE: 06/23/11: CIA-RDP86-00513R000617800006-6

CZECHOSLOVAKIA

CAPEK, O.; HANC, O.; TADRA, M.; TUMA, J.; Research Institute of Pharmacy and Biochemistry (Vyzkumny Ustav pro Farmacii a Biochemii), Prague.

"Microbial Transformation of Steroids. XXVI. An Improved Method of Preparation of Cortisone from Cortexolone."

Prague, Ceskoslovenska Farmacie, Vol 15, No 4, May 66, pp 198-199

Abstract /Authors' English summary modified/: Beauveria bassiana strain No 663 gives a yield of over 90% in the transformation of cortexolone to epicortisol. The raw epicortisol is acetylized and oxidized selectively to cortisone acetate, without isolating the intermediate products. The acetate is saponified with sodium methylate; free cortisone is obtained with a yield of 78% calculated on the basis of the original cortexolone. With recrystalized cortexolone the yield increases to 80%. 3 Czech references. (Manuscript received 3 Aug 65).

1/1

APPROVED FOR RELEASE: 06/23/11: CIA-RDP86-00513R000617800006-6

APPROVED FOR RELEASE: 06/23/11: CIA-RDP86-00513R000617800006-6

BECVAROVA, Hana; HANC, O.; MACEK, K.

Course of transformation of benzaldehyde by Saccharomyces cerevisiae. Folia microbiol. 8 no.3:165-169 '63.

1. Research Institute for Pharmacy and Biochemistry, Prague 3.
(ALDEHYDES) (METABOLISM) (SACCHAROMYCES)

APPROVED FOR RELEASE: 06/23/11: CIA-RDP86-00513R000617800006-6

APPROVED FOR RELEASE: 06/23/11: CIA-RDP86-00513R000617800006-6

CAPEK, A.; HANC, O.; TADRA, M.

Microbial transformations of steroids. XXI. Microbial preparation of 1,4-androstadiene derivatives. Folia microbiol. 8 no.2:120-124 '63.

1. Research Institute for Pharmacy and Biochemistry, Prague 3.
(FUSARIUM) (ANDROGENS) (STEROIDS) (PROGESTERONE)

APPROVED FOR RELEASE: 06/23/11: CIA-RDP86-00513R000617800006-6

APPROVED FOR RELEASE: 06/23/11: CIA-RDP86-00513R000617800006-6

BECVAROVA, Hana; HANC, C.

Production of phenylacetylcarbinol by various yeast species. Folia microbiol. 8 no.1:42-47 '63.

1. Research Institute of Pharmacy and Biochemistry, Prague 3.
(YEASTS) (ALCOHOLS) (ALDEHYDES)
(DECARBOXYLASES)

APPROVED FOR RELEASE: 06/23/11: CIA-RDP86-00513R000617800006-6