IOFFE, A.I., starshiy nauchn.sotrudnik; TSETLIN, A.M., otv.red.

[Automatic voltage regulators for generators of central electric power plants of lumbering enterprises] Avtomaticheskoe regulirovanie napriazheniia generatorov na tsentral'nykh elektricheskikh stantsiiakh lesozagotovitel'nykh predpriiatii. TSentr. nauchno-issl. in-t mekhanizatsii i energ. lesnoi promyshl., 1958. 59 p. (MIRA 12:2)

1. SibNIILKHB (for Ioffe).

(Voltage regulators) (Electric power plants--Equipment and supplies)

30307
S/115/61/000/008/002/009
E194/E119

10.1500

AUTHOR: Ioffe, A.I.

TITLE: Problems in the design of instruments with elastic sensitive elements

PERIODICAL: Izmeritel'naya tekhnika, no.8, 1961, 9-13

TEXT: The present work deals with instrument design without systematic error because accurate and not approximate relationships are used. It also considers improvements in overall accuracy resulting from the use of a sensitive element with non-linear characteristics. The output signal of the equipment is a function of the pressure applied to the pick-up but the pressure sensitive element of the pick-up itself has a pressure response characteristic and it is first shown that the shape of this characteristic governs the accuracy of the instrument as a whole. To this end error expressions are derived for sensitive elements with linear, logarithmic and exponential characteristics. When this has been done, then sensitive elements which give the minimum error in particular cases can be selected. A numerical example is given for an instrument measuring the Mach number, M, by an aerometric

Card 1/2

30307

Problems in the design of instruments... S/115/61/000/008/002/009
E194/E119

method. M can be expressed as a function of the ratio of the static and dynamic pressures, e.g. graphically. Three methods of finding M are then possible: 1) by determining the static and dynamic pressures and finding their ratio (linear method); 2) by measuring the logarithms of the pressures and working from the difference; 3) by using an exponential equivalent to the relationship between M and the static and dynamic pressures and determining convenient and appropriate functions of the static and dynamic pressures. Error equations are given for these cases and it is shown that the error in determining M depends upon the pressure law transmitted by the pick-up. It is shown that at low pressures the error of M is greater in linear pick-ups than logarithmic. It is also concluded that in designing instruments to measure M over a wide range of static and dynamic pressures the pick-up should have logarithmic characteristics whereas for low altitudes (high dynamic and static pressures) the linear elements should be linear. The suitability of exponential pick-up characteristics must be determined separately in each particular case. There are 5 figures, 1 table and 3 Soviet-bloc references.

Card 2/2

IOFFE, A.I., inzh. (Krasnoyarsk)

Regulated d.c. drive. Elektrichestvo no.10:71-73 O '61.
(MIRA 14:10)

(Electric driving)

S/119/63/000/003/009/010
D201/D308

AUTHORS: Ioffe, A.I. and Cherkasov, Ye.P.

TITLE: A semiconductor transducer for converting a continuously varying voltage into an on-off electric signal

PERIODICAL: Priborostroyeniye, no. 3, 1963, 23-24

TEXT: A short description of a contactless phase-sensitive transistor circuit which transforms an a.c. voltage into an on-off d.c. signal. The circuit consists of a directly coupled complementary pair of transistors with heavy positive feedback to the base of the second (collector of the first) transistor, the latter being in grounded collector connection. Since the supply of the second transistor is through a diode, from a source having the same frequency as the input signal, the arrangement is phase-sensitive, the heavy positive feedback producing an on-off operation of the pair. There are 3 figures.

Card 1/1

IOFFE, A.I.

Basic requirements for the drive of the feeding mechanism of frame saws. Trudy VSNIPILesdrev no.7:3-16 '63.

(MIRA 17:2)

1. Nachal'nik laboratorii avtomatizatsii Vostochno-Sibirskogo nauchno-issledovatel'skogo i proyektnogo instituta lesnoy i derevoobrabatyvayushchey promyshlennosti.

ACCESSION NR: AP4044725 S/0207/64/000/004/0108/0113

AUTHORS: Ioffe, A. I. (Moscow); Naugol'ny"kh, K. A. (Moscow); Roy, N. A. (Moscow)

TITLE: On the initial stage of an electric discharge in water

SOURCE: Zhurnal prikladnoy mekhaniki i tekhnicheskoy fiziki, no. 4, 1964, 108-113

TOPIC TAGS: electric discharge, ionized gas, heat transfer, dissociated gas, discharge column, gas pressure, plasma conductivity

ABSTRACT: The process of an electric discharge column spreading in water was discussed analytically for small spreading rates and zero magnetic forces. A theoretical model is constructed on the basis of small dR/dt (R- column radius) assumption which leads to linear acoustic approximations that satisfy Laplace's equation $\Delta\varphi = 0$ and the linearized Euler momentum equation. This in turn leads to an expression for the pressure around the discharge column given by

$$p - p_0 = -\rho_0 \frac{\partial\varphi}{\partial t} - \frac{\rho_0}{2}\left(\frac{\partial\varphi}{\partial r}\right)^2$$

. Dissociative heat transfer in a thin layer around the discharge column is considered to be the primary source of energy loss, and for a planar geometry and constant mass flow rate the temperature distribution

Card 1/2

ACCESSION NR: AP4044725

is described by the equation $\frac{dT}{dx} = -\frac{R'p}{2\pi T_1} 5.5 [(1+\alpha) - T_1]$. Analysis shows this transition layer to be of the order of 10^{-5} cm. The temperature within the column is determined using conduction-diffusion equation with Saha's equilibrium ionization expression for temperature estimates not exceeding 15000C. A mean adiabatic coefficient γ is determined for water in the 9000-16000C temperature range and 500 to 2000 atm range ($\gamma = 1.21$), and from an energy balance equation an expression is derived for column expansion rate u given by

$$u^4 \left(\ln \frac{2c}{u} - \frac{1}{2}\right) = \frac{N_0(\gamma - 1)}{2\pi\gamma p}.$$

Radius versus time and discharge potential versus time curves are calculated using experimentally determined column radii. This is done by means of photographing the discharge. "The authors thank S. I. Braginskiy for helpful discussions." Orig. art. has: 16 formulas and 6 figures.

ASSOCIATION: none

ENCL: 00

SUBMITTED: 09Jan64

OTHER: 005

NO REF SOV: 005

SUB CODE: ME,GP

Card 2/2

IOFFE, A.I. (Moskva); NAUGOL'NYKH, K.A. (Moskva); ROY, N.A. (Moskva)

Initial stage of an electric discharge in water. PMTF no.4: 108-113 Jl-Ag '64. (MIRA 17:10)

IOFFE, A.I.; UVERSKIY, A.A. [Uvers'kyi, O.O.]

Automatic control of the ammoniation process in the production of combined fertilizers. Khim.prom. [Ukr.] no.2:68-70 Ap-Je '65. (MIRA 18:6)

IOFFE, A.I.; SLINKOV, V.M., nauchnyy sotrudnik; KUNGS, Ya.A., nauchnyy sotrudnik

System of the automatic control of log frame saws. Trudy VSNIPILesdrev no.8:3-13 '63. (MIRA 18:11)

1. Nachal'nik laboratorii elektrotekhniki i avtomatiki Vostochno-Sibirskogo nauchno-issledovatel'skogo i proyektnogo instituta lesnoy i derevoobrabatyvayushchey promyshlennosti (for Ioffe). 2. Laborariya elektro-tekhniki i avtomatiki Vostochno-Sibirskogo nauchno-issledovatel'skogo i proyektnogo instituta lesnoy i derevoobrabatyvayushchey promyshlennosti (for Slinkov, Kungs).

IOFFE, A.I.; UVERSKIY, A.A.; GAVELYA, V.V.

Fast method for measuring the moisture content of granular nitrogen-phosphorus-potassium fertilizers. Zav.lab. 31 no.10:1212-1213 '65. (MIRA 19:1)

1. Gosudarstvennyy nauchno-issledovatel'skiy i proyektnyy institut azotnoy promyshlennosti i produktov organicheskogo sinteza, Dnepredzerzhinskiy filial.

ACC NR: AP7003254 (N) SOURCE CODE: UR/0207/66/000/006/0069/0072

AUTHOR: Ioffe, A. I. (Moscow)

ORG: Institute of Acoustics, AN SSSR (Akusticheskiy in-t AN SSSR)

TITLE: A contribution to the theory of the initial stage of electrical discharge in water

SOURCE: Zhurnal prikladnoy mekhaniki i tekhnicheskoy fiziki, no. 6, 1966, 69-72

TOPIC TAGS: electric discharge, electric circuit, circuit design

ABSTRACT: Experiments on electrical discharge in water demonstrate that such variables as electrical current in the circuit, voltage, channel radius, discharge radius, pressure in the compression pulse, as well as the change in these variables in time may apparently be defined in terms of four given parameters, i.e., initial voltage on capacitor, V_0, inductance, L, of the discharge loop, capacitance, C, of charging capacitor, and length, l, of interelectrode space. In order to describe behavior of discharge in time, an attempt is made to construct a system of equations which must also include variables characterizing the electrical discharge circuit and those referring to the discharge channel formed by breakthrough. Solution of the system should show the time dependence of the variables which are of interest. The author considers the electrical discharge circuit to be an ordinary oscillatory loop with given L and C, but with loop resistance entirely determined by the discharge

Card 1/2

ACC NR: AP7003254

channel resistance which varies in time. The discharge channel is a cylinder expanding in time. The author starts from the usual oscillatory circuit equation and taking temperature factors into consideration derives solutions for eight cases illustrated by graphs in addition to equations. The author thanks Yu. P. Rayzer for advice and consideration, and K. A. Naugol'nykh and N. A. Roy for valuable discussions. Orig. art. has: 12 formulas and 8 figures.

SUB CODE: 20, 09/ SUBM DATE: 30May66/ ORIG REF: 009/ OTH REF: 001

Card 2/2

L 34869-66 EWT(d)/EWP(v)/EWP(k)/EWP(h)/EWP(l) BC

ACC NR: AP6014525 (A) SOURCE CODE: UR/0115/65/000/011/0062/0063

27
25
B

AUTHOR: Ioffe, A. I.

ORG: none

TITLE: Remote-adjustable contactless device for signaling a specified movement

SOURCE: Izmeritel'naya tekhnika, no. 11, 1965, 62-63

TOPIC TAGS: production engineering, signaling device, contactless signaling device, amplifier design, electric relay, electronic circuit, electronic signal, remote control

ABSTRACT: A device (see figure) for signaling the completion of a specified mechanical (small) movement is described. Two identical differential transformer-type motion transducers 1 and 2 connected in opposition feed an amplifier-relay. The armature 3 position depends on the measurand. The armature 4 position is preset. At a definite point of armature 3 movement, the relay operates and sends off a signal. These characteristics of an experimental model are claimed: dead zone, 5 with input voltage up to 10 mv and

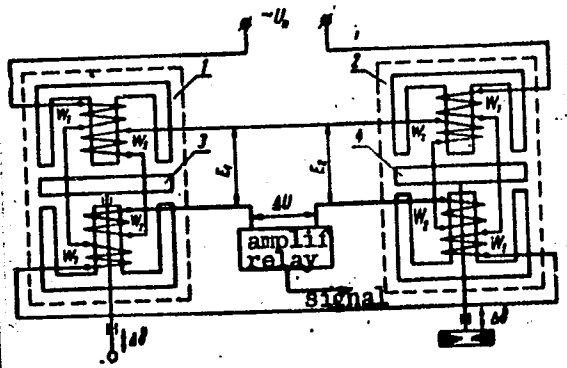

UDC: 681.2.088:531.71

Card 1/2

L 34869-66

ACC NR: AP6014525

2

temperatures 0—60C; drift, 3μ in 6 months for 5-mm gap; temperature error, 10μ for 0—60C; error due to ± 5% variation of voltage and frequency, 2μ. "The amplifier-relay circuit was developed by M. P. Davidenko." Orig. art. has: 3 figures.

SUB CODE: 09 / SUBM DATE: none

control device

Card 2/2

IOFFE, A.I.

Automation of the change in the gradient of saws in a saw frame. Trudy VSNIPILesdrev no.10:23-26 '64. (MIRA 18:10)

1. Nachal'nik laboratorii avtomatiki Vostochno-Sibirskogo nauchno-issledovatel'skogo i proyektnogo instituta lesnoy i derevoobrabatyvayushchey promyshlennosti.

(A) L 8499-66 EWT(m)/EWP(j) RM

ACC NR: AP5028479 SOURCE CODE: UR/0286/65/000/020/0064/0064

AUTHORS: Levitin, I. A.; Gromova, L. G.; Petrova, V. D.; Ioffe, A. I.; Marchenko, Ye. D.

ORG: none

TITLE: A method for obtaining rubbers. Class 39, No. 175644

SOURCE: Byulleten' izobreteniy i tovarnykh znakov, no. 20, 1965, 64

TOPIC TAGS: rubber, ozone, antiozonant, cerisin, paraffin, petrolatum/ AF antiozonant mixture

ABSTRACT: This Author Certificate presents a method for obtaining rubber by applying a waxlike antiozonant. To increase the resistance of rubber to ozone, mixture AF, consisting of natural cerisin (30-70 wt parts), synthetic cerisin (20-5 wt parts), paraffin (40-10 wt parts), and petrolatum (10-0 wt parts), is used as the waxlike antiozonant. Mixture AF may be applied together with chemical antiozonants.

SUB CODE: 07, 11/ SUBM DATE: 11Sep62

UDC: 678.7.048
665.436.432

Card 1/1

IOFFE, A.L., inzh.

Practical methods for re-equipping clothing factories.
Shvein. prom. no.4:19-20 Jl-Ag '59. (MIRA 13:2)

1.Gosudarstvennyy nauchno-tekhnicheskiy komitet Moldavskoy SSR, Kishinev.
(Clothing industry--Equipment and supplies)

IOFFE, A.L. (Kishinev)

Centralization of the repairing of clothing industry equipment in Moldavia. Shvein.prom. no.6:35-36 N-D '62. (MIRA 15:12)
(Moldavia—Industrial equipment—Maintenance and repair)

TOFFE, A. L.

CA

11B

PROCESSES AND PROPERTIES INDEX

Determination of glutathione in the presence of cysteine. G. A. Shamshikova and A. L. Toffe. *Biokhimiya* 12, 437-43(1947).—The detn. of glutathione (GSH) in pure solns. and in protein-free tissue extn. by the glyoxylase method of Woodward (*C.A.* 39, 7333[1]) gives accurate results only if cysteine is absent. In the presence of traces of cysteine, the oxidation of GSH by the O of the air is catalyzed, and low analytical values are obtained. This method is rendered accurate by performing the glyoxylase reaction in Thunberg test tubes filled with H or N. Electro-reduction should be carried out at 0° just prior to the glyoxylase reaction. H. Pricstley

ASM-SLA METALLURGICAL LITERATURE CLASSIFICATION

IOFFE, A. L.

USSR/Medicine - Gluthathione
Medicine - Kidney

Jan/Feb 1948

"Biosynthesis of Glutathione in Surviving Animal Tissues," A. Ye. Braunshteyn, G. A. Shamshikova, A. L. Ioffe, Lab of Chem of Nitrogen Conversion, Inst of Biol and Med Chem, Acad Med Sci USSR, Moscow, 6 pp

"Biokhim" Vol XIII, No 1

Show that surviving pieces of mouse kidney in vitro form glutathione very rapidly under aerobic conditions. After 2-hr period 1 g of tissue will produce from 1 to 5 mg of glutathione.

Submitted 20 Sep 1947

PA 64T61

IOFFE, A. L.

FA 45/49T56

USSR/Medicine - Biochemistry Jan/Feb 49
Medicine - Pyrrolidonecarboxylic Acid

"Use of 1-Pyrrolidonecarboxylic Acid (Proline) in the Biosynthesis of Glutathione by Animal Tissue," G. A. Shamshikova, A. L. Ioffe, Lab of Chem of Nitrogen Exchange, Inst of Biol and Med Chem, Acad Med Sci USSR, Moscow, 4½ pp

"Biokhimiya" Vol XIV, No 1

Shows it is possible to use 1-pyrrolidonecarboxylic acid instead of glutaminic acid when synthesizing glutathione from its component amino acids with sections of rat liver. Submitted 4 Jul 48.

45/49T56

IOFFE, A. L.

CA

11a

Employment of L-5-oxo-2-pyrrolidinecarboxylic acid in the biosynthesis of glutathione by animal tissues. G. A. Shamshikova and A. L. Ioffe. *Biokhimiya* 14, 74-8 (1949); cf. Woodward and Reinhart, C.A. 37, 2025[illegible]. L-5-Oxo-2-pyrrolidinecarboxylic acid (I) can be substituted for glutamic acid in the synthesis of glutathione (the other components being cysteine and glycine) by rat liver slices. In many expts., I was even superior to glutamic acid. The optimum pH is around 7.4, as is the case with glutamic acid. H. Priestley

ASM-SLA METALLURGICAL LITERATURE CLASSIFICATION

IOFFE, A.L.; DMITRIYEVA, G.A.

Technology of finishing hard fibreboards. Der. prom. 13 no.8: 17-18 Ag '64. (MIRA 17:11)

IOFFE, A.L., kand. tekhn. nauk; ZEZIN, V.G., kand. tekhn. nauk

Industrial rural construction using new boards on a base of plant materials. Sbor. inform. soob. VNIINSM no.14:7-14 '62. (MIRA 18:3)

1. Vsesoyuznyy nauchno-issledovatel'skiy institut novykh stroitel'nykh materialov Akademii stroitel'stva i arkhitektury SSSR (for Ioffe). 2. Nauchno-issledovatel'skiy institut sel'skogo stroitel'stva (for Zezin).

IOFFE, A.L.; DMITRIYEVA, G.A.

Coating hard fiberboard with paper plastic. Der. prom. 14 no.1:7-8 Ja '65. (MIRA 18:4)

1. Vsesoyuznyy nauchno-issledovatel'skiy institut novykh stroitel'nykh materialov.

IOFFE, A.L.; DMITRIYEVA, G.A.

Reducing the loss of fiber in the manufacture of fiberboards. Der. prom. 14 no.4:26 Ap '65. (MIRA 18:5)

1. Vsesoyuznyy nauchno-issledovatel'skiy institut novykh stroitel'nykh materialov.

OTLIVANCHIK, A.N.; IOFFE, A.L.; DMITRIYEVA, G.A.

Fireproofing of wood fiberboards. Der. prom. 15 no.1:8-10 Ja '66. (MIRA 19:1)

IOFFE, A. M.

BLYUMENTAL', R.M.; GIRICH, A.I.; GONCHARIK, A.K.; GUSEVA, T.P.; ZHITKOVA, L.A.; IOFFE, A.M.; KULEMIN, P.D.; LEVINA, L.I.; OSHKIN, P.A.; PAPROTSKIY, T.V.; RYAKHINOV, A.N.; SAMSONOV, N.A.; TULAYKOV, V.N.; USTINOV, I.M.; FAYN, B.P.; SHIFRIN, D.L.; KOLOTILOV, Vasiliy Ivanovich, red.; SVYATITSKAYA, K.P., vedushchiy red.; TROFIMOV, A.V., tekhn.red.

[Equipment for the petroleum industry] Neftianoe oborudovanie. Vol.5 [Petroleum valves and fittings] Nefianaia armatura. Moskva, Gos. nauchno-tekhn.izd-vo neft. i gorno-toplivnoi lit-ry. 1958. 247 p. (MIRA 12:1)

(Petroleum industry--Equipment and supplies)

KOZHEVNIKOV, S.N.; PRAZDNIKOV, A.V.; IOFFE, A.M.; GLIKIN, M.P.

Stand for the testing and installation of a pilgrim mill feed mechanism. Metallurg 9 no.3:29-30 Mr '64. (MIRA 17:3)

1. Institut chernoy metallurgii i zavod im. K.Libknekhta.

ACC NR: AT7000712 SOURCE CODE: UR/0000/66/000/000/0045/0050

AUTHOR: Kozhevnikov, S. N. (Corresponding member AN UkrSSR); Prazdnikov, A. V. (Candidate of technical sciences); Ioffe, A. M. (Candidate of technical sciences); Fabrika, L. P. (Engineer)

ORG: None

TITLE: Use of electronic simulation for studying the hydropneumatic system of the feed mechanism on a pilger mill

SOURCE: Ukraine. Ministerstvo vysshego i srednego spetsial'nogo obrazovaniya. Gidroprivod i gidropnevmoavtomatika (Hydraulic drive and hydropneumatic automation), no. 2, Kiev, Izd-vo Tekhnika, 1966, 45-50

TOPIC TAGS: rolling mill, pneumatic servomechanism, hydraulic device, computer application, analog computer

ABSTRACT: Electric simulation is used for studying the operation of the feed mechanism on a pilger mill. This method consists of using an analog computer for solving the equation of motion of the moving masses in the mechanism. Shown in the figure is a feed mechanism for production of seamless tubes 219-325 mm in diameter. The unit contains a hydraulic brake consisting of housing 4 with diaphragm 6. Inside the housing is tapered plunger 9 with a rod rigidly connected to plunger 3. The entire braking system is filled with water which is fed in at a pressure of $58.9 \cdot 10^4$ N/m^2.

Card 1/3

ACC NR: AT7000712

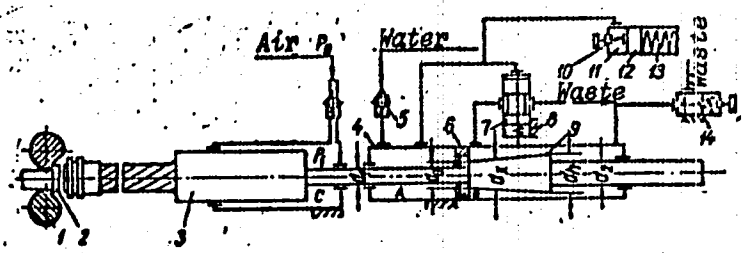

Rolls 1 move sleeve with mandrel 2 as well as plungers 9 and 3 from the extreme left-hand position toward the right. During this process, water from the main line flows through check valve 5 into cavities A and B. After completion of rolling, the moving masses are braked by compressed air in chamber C and begin to move toward the left. On the return path, water from cavity B flows freely through valve 7 into the waste line until the end of the tapered plunger covers the diaphragm. At this point, the fluid pressure in chamber A rises and valve 7 cuts off the waste line. This begins braking of the moving masses. The fluid in chamber A is forced through the annulus between the tapered plunger and the diaphragm into chamber B and through pressure valve 14 into the waste line. Valve 14 is used for regulating braking conditions. The length of the braking path is adjusted by using screw 10 for setting piston 12 in measuring unit 11. When plunger 9 enters diaphragm 6, piston 12 is moved by fluid pressure to the extreme right-hand position. This action delivers a fixed quantity of fluid to

Card 2/3

ACC NR: AT7000712

the cylinder of measuring unit 11 without resistance, so that there is no braking force on a given section of the braking path. When piston 12 stops in the extreme right-hand position, braking force develops in the hydraulic braking system. After completion of braking at the beginning of the rolling process, spring 13 returns piston 12 to the original position while spring 8 returns slide valve 7 to the neutral position. Electronic simulation was used for studying motion of the masses in this mechanism as a function of their magnitude, the working capacity of the feed mechanism was determined and operation of the hydraulic brake was checked with variations in parameters. The program included simulation of both the acceleration and braking of the moving masses. The resultant data show that an increase in air pressure considerably reduces the operating cycle of the mechanism accompanied by a sharp increase in deceleration of the moving masses past the permissible value. An increase in the gap between the tapered plunger and the diaphragm to more than 0.4 mm results in an excessive final velocity of the moving masses during braking. Repair measures are called for when the clearance reaches this limiting value. The given data agree with those of dynamic computation. Orig. art. has: 5 figures.

SUB CODE: 13/ SUBM DATE: 29Jun66

Card 3/3

KOZHEVNIKOV, S.N.; PRAZDNIKOV, A.V.; IOFFE, A.M.

New trends in the creation of high-speed feeding devices for pilgrim mills. Metallurg 9 no.9:21-23 S '64. (MIRA 17:10)

IOFFE, Anatoliy Mikhaylovich; MORUTOVA, A., red.

[Notes of a doctor-hypnotist] Zapiski vracha-gipnotizera. Kemerovo, Kemerovskoe knizhnoe izd-vo, 1965. 60 p. (MIRA 18:10)

USSR/Medicine - Antibiotics Nov/Dec 52

"The Protistocidal Properties of Certain Mold Fungi," B. S. Drabkin, A. S. Ioffe, Chkalov Med Inst

"Mikrobiol" Vol 21, No 6, pp 700-704

Describes research conducted on 25 cultures of 8 genera fungi. States that examn of the culture media of Alternaria, Penicillium, and Aspergillus fungi, revealed a protistocidal effect on Paramaecium cadatum. Alc extract of the fungus mass of Alternaria, Penicillium, Mucor and Fusarium exert a protistocidal effect on paramaecia. An especially potent

239T41

extract is obtained from cultures of the Fusarium species. The accumulation of active protistocidal agents in the fungus mass of a Fusarium culture depends on the compn of the nutrient medium, the temp, and general conditions under which the culture is grown.

239T41

S/081/63/000/002/041/088
B156/B144

AUTHOR: Ioffe, A. S.

TITLE: Features of a process for producing tools made of metal powder containing diamond dust

PERIODICAL: Referativnyy zhurnal. Khimiya, no. 2, 1963, 372, abstract 2M40 (Tr. VI Koordinats. soveshchaniya po shlifovke i polirovke stekla i drugikh khrupkikh materialov, 1960. Saratov, 1961, 176-180)

TEXT: The process employed at the Petrodvortsovskiy chasovoy zavod (Petrodvorets Watch and Clock Works) for manufacturing tools made of metal powder containing diamond dust is described; the types of tool are 30-140 mm diam. slotted disks, grinding disks of diameters up to 140 mm, precision-grinding, tool-grinding and grinding wheels, sintered needles for making spherical depressions in ruby stones, diamond dies with apertures of 0.06-0.3 mm (accuracy 5μ) for drawing wire, and diamond-cutting tools. [Abstracter's note: Complete translation.]

Card 1/1

IOFFE, A.V.

Ca

3

PROCESSES AND PROPERTIES INDEX

Spectral distribution of the inner photoeffect in cuprous oxide. A. V. Ioffe and A. F. Ioffe. *Physik. Z. Sowjetunion* 11, 241-62(1937)(in English).—The fundamental max. of the spectral curve of the photocond. of Cu_2O at 630 mμ has no simple phys. meaning. It is displaced toward shorter wave lengths with decreasing thickness of the oxide layer. At a thickness of 9 μ the spectral curve of the photocond. practically reaches the curve of the photoeffect of a blocking layer, which has a max. at 540 mμ. Besides the photocond. in the visible spectrum, photocond. of the same order of magnitude is also observed in the ultraviolet, with a max. at 290 mμ. The photocond. per unit of incident energy is for some samples greater in the ultraviolet than in the visible. The photocond. per unit of absorbed energy or per no. of absorbed photons is independent of the wave length in the visible. It decreases a little toward shorter wave lengths, evidently because insufficient account was taken of reflection of light from the surface. The deviations in the far red are due to the appearance of a second absorption band. The connection between the temp. coeff. of the elec. cond. and the limit of photocond. is not verified for Cu_2O, which corresponds completely to the current mechanism established for this substance.

Harold Gershinowitz

ASM-SLA METALLURGICAL LITERATURE CLASSIFICATION

IOFFE, A.V.

CK

PROCESSES AND PROPERTIES INDEX

3

Semiconductors in strong electric fields. A. V. Ioffe and A. F. Ioffe. *J. Exptl. Theoret. Phys.* (U. S. S. R.) 9, 1428–30(1939); cf. *C. A.* 33, 6708[1].—From measurements on various electron semiconductors at full strengths from 1 to 10^6 v./cm. and temps. from −190 to +80°, and for periods of 1 down to 10^{-4} sec. with or without irradiation, I, and I, find that in every case up to a certain small field strength Ohm's law is obeyed, after which the cond. rises approx. as an exponential function of the field. Since the addnl. cond. on illumination is independent of the field, all theories (Pisarenko, Hippel, Fröhch, Walbel) based on increased energy or mobility of the electrons are inapplicable. The strong influence of temp. in strong fields invalidates the theories of Fowler and Zener. The Frenkel-Vol'kenshtein theory of lowered electric barrier and increased thermal dissociation (*C. A.* 33, 4640[9], 7632[2]) gives the best qual. explanation of the phenomenon. Influence of electric fields on the electric conductivities of cuprous oxide, vanadium pentoxide, selenium, antimony trisulfide, molybdenum sulfide, tungstic oxide and thallium sulfide. *Ibid.* 1451–6.—A vacuum-tempered sample of Cu_2O obeys Ohm's law up to 50 kv./cm. at −180° (breakdown occurs at 200 at 100 kv.). Se up to 20 v. only (breakdown occurs at 200 kv.), V_2O_5 to 10 kv., MoS_2 up to near 500 v./cm. Complete data on the variation of the resistance of Cu_2O, Se, V_2O_5, Sb_2S_3, MoS_2, WO_3 and Tl_2S as a function of the temp. and the field are given in 11 figs. and 7 tables. F. H. R.

ASM-SLA METALLURGICAL LITERATURE CLASSIFICATION

IOFFE, A.V.

3

Semiconductors in strong electric fields. A. V. Ioffe and A. F. Ioffe. *J. Phys.* (U. S. S. R.) 2, 283-304(1940). Translation of the paper abstracted in C. A. 35, 1014[4].
F. H. Rathmann

ASM-SLA METALLURGICAL LITERATURE CLASSIFICATION

Ioffe, A. V.

"Resistance of a Semi-Conductor on the Boundary with a Metal," Dok. AN 27, No. 6, 1940.

Physico-Tech. Inst. AS, Leningrad.

1ST AND 2ND ORDERS

PROCESSES AND PROPERTIES INDEX

IOFFE, A.V.

Contact of semiconductor with metals. A. V. Ioffe and A. F. Ioffe. *Bull. acad. sci. U. R. S. S., Sér. phys.* 5, 550(1941); cf. *C. A.* 34, 7087[9].—Dependence of the resistance of the semiconductor in contact with metal on the contact potential difference was studied. For high resistances the dependence is slight, but is particularly strong for materials of low resistance. G. M. K.

M

ASM-SLA METALLURGICAL LITERATURE CLASSIFICATION

IOFFE, A.V.

Electrical resistance of the contact between a semiconductor and a metal. A. V. Ioffe. *J. Phys. (U.S.S.R.)* 10, 49-60(1946).--In order to study the mechanism of current rectification at the boundary of a semiconducting layer on a metal the contact resistance and potential of the semiconductor and a metal were investigated with currents in both directions. For the semiconductors Cu_2O, UO_2, CuO, V_2O_5, TiO_2, ZnO, NiO, CdO, CdS, Se it was found that, close to metal, there arises a considerable addnl. resistance when an electron semiconductor borders on a metal possessing a higher contact potential or when a hole semiconductor borders on a metal having a lower contact potential. The contact potentials were found to be independent of the temp. and of the specific cond. The cond. was estd. and its dependence on the potential difference, temp. and current direction was studied. Feeble rectification was observed. S. E. Whitcomb

ASM-SLA METALLURGICAL LITERATURE CLASSIFICATION

IOFFE, A. V.

FA 19/49T105

USSR/Physics Dec 48
Conductors, Semi-
Rectification

"Rectification at the Boundary of Two Semiconductors," A. V. Ioffe, Leningrad Physicotech Inst, Acad Sci USSR, 13 pp

"Zhur Tekh Fiz" Vol XVIII, No 12

Determined that a high degree of rectification can be obtained by placing one semiconductor close to another without benefit of heat treatment. Reasons for this phenomenon can be traced to varying conductive mechanisms in touching

[redacted] 19/49T105

USSR/Physics (Contd) Dec 48

semiconductors and presence of different contact potentials between the two bodies. Ioffe states that much work still remains in study of changes in capacity of boundary layers in rectifying pairs, and current dynamics and their relation to frequency, temperature, and voltage. Submitted 10 Aug 48.

[redacted] 19/49T105

IOFFE, A. V.

PA 240T103

USSR/Physics - Heat Conductivity Dec 52

"Simple Method of Measuring Heat Conductivity," A. V. Ioffe and A. F. Ioffe

"Zhur Tekh Fiziki" Vol 22, No 12, pp 2005-2013

Described method requires only 5 min of time and gives an accuracy of 3 - 5%. The sample is put between two blocks, one of them immersed in liquid air or cooling mix. Derive formula for computation of heat conductivity. Received 25 Sep 52.

240T103

Ioffe, A. V.

USSR.

6

Relaxation processes in rectifying solid semiconductors.

A. V. Ioffe and A. F. Ioffe. Zhur. Tekh. Fiz. 23, 2[illegible]-2[illegible] (1953). The behavior of the pairs Cu_2O + TiO_2, Cu_2O + ZnO, UO_2 + TiO_2, CuO + TiO_2, UO_2 + ZnO, Cu_2O + WO_3, and TiO_2 + WO_3 is typified by that of Cu_2O + TiO_2. In building up the barrier layer, step I, taking only a small fraction of a sec., is the attainment of diffusion equil. of the conduction electrons in the contact field of the boundary layer. This produces a resistance greatly exceeding that of the main mass of the semiconductor. The resistance of the barrier layer then spontaneously increases at a decreasing rate over a period of min. or hrs. If an external voltage V is then impressed on the rectifying junction, the resistance increases in the barrier direction and decreases in the opposite direction, at a rate proportional to V. This change is accompanied by polarization. The mechanism is as follows: after step I, the elec. field of the contact layer displaces ions of the added elements toward the electrode. The external field, concd. at this layer, has the same effect on the entire mass of ions in the case of a barrier current. Both processes are slowed down by the back-diffusion of ions from the boundary into the body of the semiconductor, where the concn. of ions is very low. However, the concn. of neutral atoms decreases rapidly in the barrier layer. Both factors lead to diffusion of ions and atoms to the boundary from the semiconductor. In the contact layer, equil. for ions is attained when in each elemental cross section the no. of ions attracted by the field equals the no. lost by diffusion. The diffusion of ions changes their distribution in the barrier layer, causing their concn. to decrease from the external boundary of the layer toward the interior of the semiconductor. Throughout the whole process the ionic charges should compensate the difference of potentials at the barrier layer. The concn. of electrons is detd. by the curvature of the zone. Resistance and polarization e.m.f. are calcd. theoretically as a function of V, and agree well with expt. from −185° to +440°.

Lyman P. Jones

On the Question of Correlation of the Thermal Conductivity of Semi-Conductors with the Mobility of the Electrons. A. V. Ioffe and A. F. Ioffe (*Zhur. Tekh. Fiziki*, 1954, 24, (10), 1911).—[In Russian]. Errors are pointed out in a paper by Goldsmid (*Proc. Phys. Soc.*, 1954, [B], 67, 360; *M. A.*, 22, 23). 1. The mean free paths (l) of phonons and electrons are not of the same order of magnitude. Examples of semi-conductors—diamond, Si, Ge, PbS, and Te—show that l phonons is from 5 to 100 times less than l (electrons). 2. The ratio of mobility (u) to thermal conductivity (λ) is not approx. the same for various semi-conductors. For two of the examples (Ge and PbS), the values of u/λ differ by a factor of 9 (3). For some semi-conductors G. finds that u/λ increases almost proportionately with at. wt. A. I and I. [illegible] note that for Se (d [illegible] 9) u/λ is ~6 times smaller than for [illegible] (or 3). In fact, for solids of similar crystal structure [illegible] increases with increasing at. wt., while for some structures (e.g. C, Si, Ge, and Sn) the mobility increases with at. wt. However, it is not possible to generalize without taking into account the nature of the chem. binding and the phonon spectrum.—A. F. B.

IOFFE, A. V.

USSR/Physics - Heat conductivity

Card : 1/1 Pub. 22 - 17/48

Authors : Ioffe, A. V. and Ioffe, A. F., Academician

Title : Some unifromities in changes of the specific heat conductivity of heat semi-conductors

Periodical : Dok. AN SSSR 97/5, 821 - 822, August 11, 1954

Abstract : Experiments intended to prove that specific heat conductivity decreases as atomic weight increases are described. The experiments were conducted with the help of a special device which permits specific conductivities to be evaluated with a very small degree of error. Two references (1952). Tables; graphs.

Institution : ...

Submitted : ...

Ioffe, A V

USSR/Physics - Conductivity

Card 1/1 Pub. 22 - 16/47

Authors : Ioffe, A. V., and Ioffe, A. F., Academician

Title : Effect of admixtures on the heat conductivity of semi-conductors

Periodical : Dok. AN SSSR 98/5, 757-759, Oct 11, 1954

Abstract : Experiments to evaluate the effect of foreign admixtures on the heat conductivity of semi-conductors are described. The various laws governing the heat conductivity magnitudes of semi-conductors are cited. Measurement of the specific-heat conductivity of solid solutions of numerous semi-conductors showed that foreign admixtures should be evaluated not only by the number of introduced atoms but also by the extent of distortions in the lattice resulted by each of the side atoms. The measured heat-conductivity values of solid solutions with large admixtures are given in tables. Three USSR references (1952 and 1954). Tables; graphs.

Institution : Academy of Sciences USSR, Laboratory of Semi-Conductors

Submitted : July 26, 1954

USSR/Physics - Heat conductivities

IOFFE, A.V.

Card 1/1 Pub. 153 - 15/19

Author : Ioffe, A. V.; Sinani, S. S.

Title : Brief communication. Heat conductivity of oxides of elements in the second group of the periodic system

Periodical : Zhur. tekh. fiz., 25, No 9 (September), 1955, 1659-1661

Abstract : In an earlier work (A. V. Ioffe, A. F. Ioffe, DAN SSR, X, No 5, 7, 821, 1954) it was shown for elements of the 4th group and for alkali-halide salts that their specific heat conductivity decreases with increase in atomic weight and that furthermore for identical atomic weight the heat conductivity of atomic lattices exceeds in order of magnitude the heat conductivity of ionic compounds. On the suggestion of A. F. Ioffe the present writers undertook the investigations described in this note with the purpose of verifying the applicability of the above conclusions to other substances, especially to clarify whether a comparatively weak difference in the character of the crystallochemical bonds is reflected along with the dependence upon atomic weight varying in the limits from 9 (Be) to 200(Hg). For study the authors choose the oxides BeO, MgO, CaO, ZnO, SrO, CdO, BaO, HgO. Their measurements confirm the systematic lowering of heat conductivity with increase in atomic weight for all the oxides except BeO and MgO (which have structure of porous powder). They thank G. N. Gordyakova for preparation of the specimens.

Submitted : June 14, 1955

APPROVED FOR RELEASE: 08/10/2001 CIA-RDP86-00513R000618620013-4"

APPROVED FOR RELEASE: 08/10/2001 CIA-RDP86-00513R000618620013-4"

APPROVED FOR RELEASE: 08/10/2001 CIA-RDP86-00513R000618620013-4"

USSR/Electricity - Semiconductors, G-3

Abst Journal: Referat Zhur - Fizika, No 12, 1956, 35028

Author: Ioffe, A. V., Ioffe, A. F.

Institution: Institute of Semiconductors, Academy of Sciences USSR, Leningrad

Title: Heat Conduction of Semiconductors

Original Periodical: Izv. AN SSSR, ser. fiz., 1956, 20, No 1, 65-75

Abstract: Review of existing concepts on the mechanism of heat conduction of semiconductors and experimental data on the measurement of the heat conduction at room temperature.

Card 1/1

IOFFE, A.V.

USSR/ Laboratory Equipment. Apparatuses, Their Theory, Construction and Application. I

Abs Jour: Referat. Zhur.-Khimiya, No. 8, 1957, 27361.

Author : A.F. Ioffe, S.V. Ayropetyants, A.V. Ioffe, N.V. Kolomoyets, L.S. Stil'bans.

Inst. Academy of Sciences of USSR.

Title : Efficiency Increase of Semiconductor Thermocouples.

Orig Pub: Dokl. AN SSSR, 1956, 106, No. 6, 981.

Abstract: With a view to increase the ratio of the mobility of electricity carriers to the heat conductivity of the lattice, it is proposed to introduce thermocouples of substances possessing approximately the same lattice constant into the first named crystalline lattice.

Card 1/1

IOFFE, A.V.; IOFFE, A.F.

Measurement of thermal conductivity of semiconductors at room temperature. Zhur. tekh. fiz. 28 no.11:2357-2363 N '58. (MIRA 12:1)

(Semiconductors--Thermal properties)

IOFFE, A.V.

S/181/60/002/05/01/041
B008/B058

AUTHORS: Ioffe, A. V., Ioffe, A. F.

TITLE: Thermal Conductivity of Solid Solutions of Semiconductors

PERIODICAL: Fizika tverdogo tela, 1960, Vol. 2, No. 5, pp. 781-792

TEXT: The paper under review deals with the clarification of the rules governing the thermal conductivity of solid solutions of semiconductors on the basis of comprehensive experiments, and especially with phonon scattering from impurities. Ye. D. Devyatkova investigated the temperature dependence of the thermal conductivity of solid solutions of (PbTe+PbSe). She discovered that the thermal conductivity of this substance decreased with temperature, and that all the less the higher the concentration of the impurity. The authors had already measured the concentration dependence of the thermal conductivity of selenides and tellurides of lead, mercury, bismuth, antimony, and tin. They express their gratitude to T. S. Stavitskaya, L. M. Sysoyeva, G. N. Gordyakova, and G. V. Kokosh for having placed the preparations at their disposal. The investigation of semiconductors with broad forbidden zones (ZnSe, ZnTe, CdSe, CdTe) is described next.

Card 1/3

Thermal Conductivity of Solid Solutions of Semiconductors

S/181/60/002/05/01/041
B008/B058

These semiconductors possess cubic lattices, and their thermal conductivity does not depend on the crystallographic direction. The thermal conductivity of solid solutions of ZnTe-CdSe as dependent on the previous annealing is shown in Fig. 1. Data on the mechanism of heat conduction are discussed in detail. The longitudinal and transverse velocities of heat propagation (phonons) in the system ZnTe-CdTe and their mean velocity are listed in Table 1. The effects of low and high concentrations of impurities are investigated, and the conductivity of some solid solutions of tellurides and selenides as dependent on the impurity concentration is illustrated in Figs. 2-7. The various physical data obtained in the experiments are listed in Tables 2 and 3. Investigations of the solid solutions of Ba_2TiO_3-$Ba_{0.5}MoO_3$, $SrTiO_3$-$Bi_{2/3}TiO_3$ (obtained from G. A. Smolenskiy), and Sb_2Te_3-Sb_2Se_3 are illustrated in Fig. 10. The authors thank B. Ya. Moyzhes, and express their gratitude to P. V. Usachev, A. V. Golubkov, and N. S. Volosatova for preparing the series of solid solutions, to A. I. Zaslavskiy for the X-ray structural analysis, to Yu. V. Ilisavskiy and A. G. Ostroumov for measuring the ultrasonic velocity, and to P. I. Mikhaylova for her assistance in measuring the thermal conductivity. There are 10 figures, 3 tables, and

Card 2/3

Thermal Conductivity of Solid Solutions of Semiconductors

S/181/60/002/05/01/041
B008/B058

7 references: 4 Soviet, 5 English, and 1 Italian.

ASSOCIATION: Institut poluprovodnikov AN SSSR, Leningrad (Institute of Semiconductors AS USSR, Leningrad)

SUBMITTED: November 27, 1959

VC

Card 3/3

L 12745-63 EWP(q)/EWT(m)/BDS AFFTC/ASD RDW/JD

ACCESSION NR: AP3006805 S/0078/63/008/009/2132/2135

AUTHOR: Ioffe, A. V.; Kuznetsov, V. G.; Polkina, K. K.

TITLE: Thermal conductivity and thermoelectric figure of merit (Z) of solid solutions in the bismuth selenide-antimony telluride and bismuth telluride-antimony selenide systems

SOURCE: Zhurnal neorganicheskoy khimii, v. 8, no. 9, 1963, 2132-2135

TOPIC TAGS: bismuth selenide, antimony telluride, bismuth telluride, antimony selenide, solid solution, alloy, semiconductor, semiconductor system, thermoelectric material, total thermal conductivity, electron, lattice, thermal conductivity, electrical conductivity, thermoelectric power, thermoelectric figure of merit, bismuth selenide antimony telluride system, bismuth telluride antimony selenide system

ABSTRACT: Total thermal conductivity (κ_t), electrical conductivity (σ), and thermoelectric power (α) have been measured at room temperature for the entire composition range of solid solutions in

Card 1/3

L 17743-63

ACCESSION NR: AP3006805

the Bi_2Se_3—Sb_2Te_3 and Bi_2Te_3—Sb_2Se_3 systems. The calculated values of the thermoelectric figure of merit (Z) were correlated with composition. Data for the systems studied are not available in the literature. Alloys were prepared by melting mixtures of the high-purity elements in the required proportions in evacuated sealed quartz ampuls. The alloys were vacuum annealed, hot pressed into specimens, and quenched from 500C. All measurements were conducted with the same specimen of each alloy. Thermal conductivity by electrons (κ_{el}), was calculated from the measured σ, and thermal conductivity by lattice vibrations (κ_l) as the difference. Isotherms of σ, α, κ_t, and Z for solid solutions in both systems studied are shown in Figs. 1 and 2 of the Enclosure. The following conclusions are reached. 1) Diffuse minima of κ_t and σ, characteristic of metals, exist in both systems at a 1/1 molar ratio of the components. 2) The peak Z values (at 33.33 and 66.66 mol% Sb_2Te_3) in the Bi_2Se_3—Sb_2Te_3 system are 1.6 and 1.3 times the Z value for pure Bi_2Se_3; the peak Z value (at 33.3 mol% Sb_2Se_3) in the Bi_2Te_3—Sb_2Se_3 system is 7 times the Z value for

Card 2/3

L 17241-63

ACCESSION NR: AP3000735

pure Bi_2Te_3. 3) The sign of α of the Bi_2Se_3—Sb_2Te_3 system changes from negative to positive at 42 mol% Sb_2Te_3 and at 50 mol% reaches its maximum value, which is 2.5 times that of pure Sb_2Te_3; α in the p-type Bi_2Te_3—Sb_2Se_3 system reaches its peak value at about 40 mol% Sb_2Se_3. Certain discrepancies in absolute α and σ values between this and a previous study (V. G. Kuznetsov, K. K. Palkina, A. V. Dmitriyev, Zh. neorgan. khimii, 8 [Abstracter's note: 9], 2136 (1963)), are attributed to the fact that the impurity content of Te was higher in the earlier study. The patterns of α and σ isotherms are similar in both studies. It was shown that the main component of κ_t in both systems is κ_l. Orig. art. has: 4 figures and 1 table.

ASSOCIATION: Institut obshchey i neorganicheskoy khimii im. N. S. Kurnakova Akademii nauk SSSR (Institute of General and Inorganic Chemistry, Academy of Sciences SSSR)

SUBMITTED: 16Aug62	DATE ACQ: 30Sep63	ENCL: 01
SUB CODE: PH, MA	NO REF SOV: 004	OTHER: 001

Card 3/3

DEVYATKOVA, Ye. D.; IOFFE, A. V.; MOYZHES, B. Ya.; SMIRNOV, I. A.; KUTASOV, B. A.; GURYEVA, E. A.

"Change of thermal conductivity of the crystal lattice at uniaxial elastic stress or at the introduction of impurities and thermal imperfections."

report submitted for Intl Conf on Physics of Semiconductors, Paris, 19-24 Jul 64.

IOFFE, A.V.

Dependence of the thermal conductivity of the crystal lattice on the ionicity of the compound. Fiz. tver. tela 5 no.11:3336-3338 N '63. (MIRA 16:12)

1. Institut poluprovodnikov AN SSSR, Leningrad.

IOFFE, A. YA.

IOFFE, A. YA.

Metallurgy

Dissertation: "Structural Diagrams for Cast-Iron Castings." Can Tech Sci, Leningrad Polytechnic Inst, Leningrad, 1953.
(Referativnyy Zhurnal--Khimiya, Moscow, No 3, Feb. 1954)

SO: SUM 213, 20 Sept 1954

PHASE I BOOK EXPLOITATION SOV/3559

Akademiya nauk SSSR. Institut metallurgii. Nauchnyy sovet po problame zharoprochnykh splavov

Issledovaniya po zharoprochnym splavam, t. 5 (Investigations of Heat-Resistant Alloys, Vol 5) Moscow, Izd-vo AN SSSR, 1959. 423 p. Errata slip inserted. 2,000 copies printed.

Ed. of Publishing House: V.A. Klimov; Tech. Ed.: I.P. Kuz'mina; Editorial Board: I.P. Bardin, Academician, G.V. Kurdyumov, Academician, N.V. Agayev, Corresponding Member, USSR Academy of Sciences (Resp. Ed.), I.A. Oding, I.N. Pavlov, and I.F. Kudin, Candidate of Technical Sciences.

PURPOSE: This book is intended for metallurgical engineers, research workers in metallurgy, and may also be of interest to students of advanced courses in metallurgy.

COVERAGE: This book, consisting of a number of papers, deals with the properties of heat-resisting metals and alloys. Each of the papers is devoted to the study of the factors which affect the properties and behavior of metals. The effects of various elements such as Cr, Mo, and W on the heat-resisting properties of various alloys are studied. Deformability and workability of certain metals as related to the thermal conditions are the object of another study described. The problems of hydrogen embrittlement, diffusion and the deposition of ceramic coatings on metal surfaces by means of electrophoresis are examined. One paper describes the apparatus and methods used for growing monocrystals of metals. Boron-base metals are critically examined and evaluated. Results are given of studies of interatomic bonds and the behavior of atoms in metal. Tests of turbine and compressor blades are described. No personalities are mentioned. References accompany most of the articles.

Ioffe, A.Ya.

PHASE I BOOK EXPLOITATION SOV/3199

Leningrad. Politekhnicheskiy institut

Sovremennyye dostizheniya liteynogo proizvodstva; trudy mezhvuzovskoy nauchno-tekhnicheskoy konferentsii (Recent Achievements in Founding: Transactions of the Scientific and Technical Conference of Schools of Higher Education) Moscow, Mashgiz, 1960. 336 p. Errata slip inserted. 4,000 copies printed.

Resp. Ed.: Yu. A. Mekhendzi, Doctor of Technical Sciences, Professor; Eds.: N. G. Girshovich, Doctor of Technical Sciences, Professor, and K. P. Lebedev, Docent; Managing Ed. for Literature on Heavy Machine Building (Leningrad Department, Mashgiz): Ye. P. Naumov, Engineer; Tech. Eds.: Ye. A. Dlugokanskaya, and L. V. Shchetinina.

PURPOSE: This book is intended for the technical personnel of foundries. It may be used by students of the field.

COVERAGE: This collection of articles discusses problems in founding processes. Individual articles treat the melting of metals and their alloys, mechanization and automation of casting processes, aspects of the manufacture of steel, cast iron, and nonferrous metal castings. No personalities are mentioned. References accompany individual articles.

Recent Achievements in Founding (Cont.) SOV/3199

Card 8/9

IOFFE, A. YA.

IOFFE, A. Ya.

PHASE I BOOK EXPLOITATION SOV/5458

Girshovich, Naum Grigor'yevich, Doctor of Technical Sciences, Professor, ed.

Spravochnik po chugunnomu lit'yu (Handbook on Iron Castings) 2d ed., rev. and enl. Moscow, Mashgiz, 1961. 800 p. Errata slip inserted. 16,000 copies printed.

Reviewer: P. P. Berg, Doctor of Technical Sciences, Professor; Ed.: I. A. Baranov, Engineer; Ed. of Publishing House: T. L. Leykina; Tech. Eds.: O. V. Speranskaya and P. S. Frumkin; Managing Ed. for Literature on Machine-Building Technology (Leningrad Department, Mashgiz): Ye. P. Naumov, Engineer.

PURPOSE: This handbook is intended for technical personnel at cast-iron foundries. It may also be of use to skilled workmen in foundries and students specializing in founding.

COVERAGE: The handbook contains information on basic problems in the modern manufacture of iron castings. The following are discussed: the composition and properties of the metal; the making of molds; special casting methods; the charge preparation; melting

Card ~~1/11~~

and modifying the cast iron; pouring, shaking out, and cleaning of castings; heat-treatment methods; and the inspection and rejection of castings. Information on foundry equipment and on the mechanization of castings production is also presented. The authors thank Professor P. P. Berg, Doctor of Technical Sciences, and staff members of the Mosstankolit Plant, headed by the chief metallurgist G. I. Kletskin, Candidate of Technical Sciences, for their assistance. References follow each chapter. There are 287 references, mostly Soviet.

TABLE OF CONTENTS:

Card ~~2/11~~

GIRSHOVICH, Naum Grigor'yevich, doktor tekhn. nauk, prof.; IOFFE, A.Ya., kand. tekhn. nauk, red.; GVIRTS, V.L., tekhn. red.

[Present state ofthe graphitization theory] Sovremennoe sostoianie teorii grafitizatsii; obzor. Leningrad, 1959. 90 p. (MIRA 14:10)
(Cast iron--Metallography)

IOFFE, A.Ya., kand. tekhn.nauk, red.; VASIL'YEV, Yu.A., red.; GVIRTS, V.L., tekhn. red.

[Control of rejects and quality improvement of gray iron castings]Bor'ba s brakom i povyshenie kachestva otlivok iz serogo chuguna. Leningrad, 1962. 93 p. (MIRA 15:11)
(Iron founding) (Foundries--Quality control)

GIRSHOVICH, Naum Grigor'yevich, doktor tekhn. nauk, prof., red.; IOFFE, A.Ya., kand. tekhn. nauk, red.; BORODULINA, I.A., red. izd-va; SHCHETININA, L.V., tekhn. red.

[Production and properties of cast iron with speroidal graphite] Poluchenie i svoistva chuguna s sharovidnym grafitom. Moskva, Mashgiz, 1962. 351 p. (MIRA 15:4)
(Cast iron—Metallography)

IOFFE, A.Ya.

Die casting with the use of vacuum. Lit. proizv. no.8:2-3 Ag '63. (MIRA 16:10)

IOFFE, A.Ya.

Primary crystallization of heat-resistant alloys. Trudy LPI no. 224: 97-112 '63. (MIRA 17:9)

GIRSHOVICH, N.G., doktor tekhn.nauk; IOFFE, A.Ya., kand.tekhn.nauk; ALEKSEYEV, A.G., inzh.

Effect of shape on the shrinkage defects and the accuracy of iron castings. Lit. proizv. no.7:29-32 Jl '65. (MIRA 18:8)

ACC NR: AP6033512 SOURCE CODE: UR/0413/66/000/018/0145/0145

INVENTOR: Ioffe, B. A.

ORG: None

TITLE: A method for orientation of components. Class 49, No. 186253

SOURCE: Izobret prom obraz tov zn, no. 18, 1966, 145

TOPIC TAGS: automation equipment, material handling, pneumatic control

ABSTRACT: This Author's Certificate introduces: 1. A method for orientation of components using compressed air. The components are put into an oriented position by the action of an air jet with a force dictated by the conditions for producing the necessary leverage. 2. A modification of this method in which the spatial position of the component may be changed several times by placing it in a chute and moving it with respect to jet systems distributed along this chute. One of these systems acts as a clamp while the others provide the necessary leverage.

Card 1/2 UDC: 621.9.06-229.64

ACC NR: AP6033512

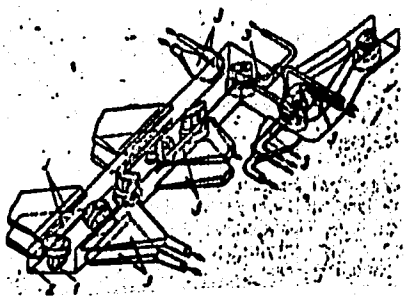

1--component; 2--chute; 3--jet systems

SUB CODE: 13/ SUBM DATE: 31Oct64

Card 2/2

137-58-4-7152

Translation from: Referativnyy zhurnal, Metallurgiya, 1958, Nr 4, p 120 (USSR)

AUTHOR: Ioffe, B. A.

TITLE: Mechanization and Automation of Forming Operations at the RE3 Works (Mekhanizatsiya i avtomatizatsiya shtampovochnykh rabot na zavode RE3)

PERIODICAL: Tr. Konferentsii po avtomatiz. i mekhaniz. tekhnol. protsessov, Riga, 1957, pp 102-110

ABSTRACT: A description and characterization of the design and operation of the AT-60 automatic press, the equipment and design of dies for that press, and of a semiautomatic bending machine are adduced.

Ye. L.

1. Metal presses--Design 2. Metal presses--Operation
3. Brakes(Metal working)--Equipment

Card 1/1

IOFFE, B.A.; ZHELAVSKIY, V.F.

Semiautomatic machine for the bending of copper armature section heads. Kuz. shtam. proizv. 4 no.11:32-34 N '62. (MIRA 15:11)

(Electric machinery industry)
(Metalworking machinery)

IOFFE, B.A.

Semiautomatic press unit for blanking and forming portions of sheet-metal parts. Kuz.-shtam.proizv. 5 no.3:42-44 Mr '63. (MIRA 16:4)

(Sheet-metal working machinery)

ZHELAVSKIY, V.F., inzh.; GODE, R.B., inzh.; IOFFE, B.A., inzh.

Multiple electrode welding tip for the welding of parts with a small spacing of spots. Svar. proizv. no.1:27-29 Ja '64. (MIRA 17:1)

1. Rizhskiy elektromashinostroitel'nyy zavod.

IOFFE, B.A.

Device for removing fin from plastic parts. Mashinostroitel' no.7:26 Jl '65. (MIRA 18:7)

IOFFE, B.A.

Device for fixing a strip with holes. Mashinostroitel' no. 1:26 Ja '66 (MIRA 19:1)

L 44281-66 EWT(1)/EWT(m)/T WW/DJ

ACC NR: AP6005393 (N) SOURCE CODE: UR/0413/66/000/001/0142/0142

INVENTOR: Kirko, I. M.; Branover, G. G.; Ioffe, B. A.; Saulite, U. A.

ORG: none

34
B

TITLE: Hermetically sealed piston pump. Class 59, No. 177778 [announced by the Institute of Physics, Academy of Sciences, Latvian SSR (Institut fiziki Akademii nauk Latviyskoy SSR)]

SOURCE: Izobreteniya, promyshlennyye obraztsy, tovarnyye znaki, no. 1, 1966, 142

TOPIC TAGS: piston, ~~pump~~, pump, hermetic seal

ABSTRACT: This Author Certificate introduces a hermetically sealed piston pump containing a inductor, a duct, and pistons. For higher efficiency the pistons are made of electroconductive nonferromagnetic material with a ferromagnetic bushing placed inside the piston. For ease of construction, the pump is made with a braking inductor for stopping the pistons in the delivery zone (see Fig. 1). Orig. art. has: 1 figure.

Card 1/2 UDC: 621.65

L 44281-66

ACC NR: AP6005393

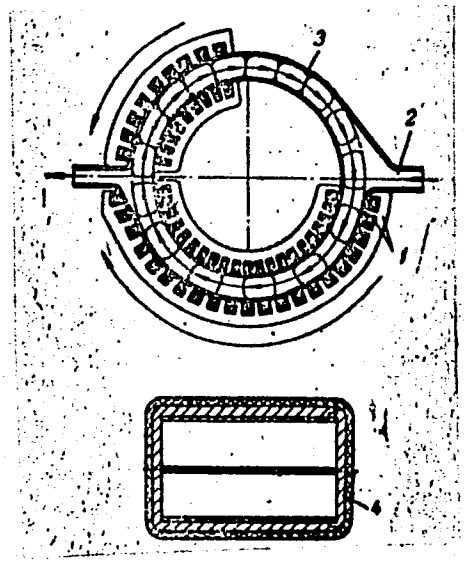

Fig. 1 Hermetically sealed piston pump. 1— Braking inductor; 2— conduit; 3— piston; 4— bushing

[LD]

SUB CODE: 13/ SUBM DATE: 20Jul64

Card 2/2 mjs

ACC NR: AP6033674 SOURCE CODE: UR/0371/66/000/004/0087/0092

AUTHOR: Ioffe, B. A.; Saulite, U. A.

ORG: Institute of Physics, AN LatSSR (Institut fiziki AN LatvSSR)

TITLE: Experimental investigation of an electromagnetic rotary displacement pump

SOURCE: AN LatSSR. Izvestiya. Seriya fizicheskikh i tekhnicheskikh nauk, no. 4, 1966, 87-92

TOPIC TAGS: fluid pump, electromagnetic pump, hydraulic pump

ABSTRACT: The authors describe the operating principles and the results of the first tests of a new type of electromagnetic induction pump, developed at the Institute of Physics of the Latvian Academy of Sciences, for the purpose of pumping conducting corrosive liquids. The pump uses no stuffing glands or bearing units, nor are valves required for the operation (Fig. 1). The construction of the test pump is described. Test results of pumping water and a solution of emulsifying oil of different viscosity are described. The described model was aimed only to check on the feasibility of the operating principle, without attempting to obtain optimal construction or high efficiency. The efficiency can be increased by improving the electromagnetic and hydraulic units. Ways of improving the design are briefly discussed. The authors thank Doctor of Physical and Mathematical Sciences I. M. Kirko and Candidate of Technical Sciences G. G. Branover for valuable advice and recommendations during the

Card 1/2

ACC NR: AP6033674

Fig. 1. Schematic diagram of electromagnetic rotary displacement pump. 1 - Closed tube channel, 2 - inlet pipe, 3 - compression pipe, 4 - piston, 5,6 - coils producing rotating magnetic field.

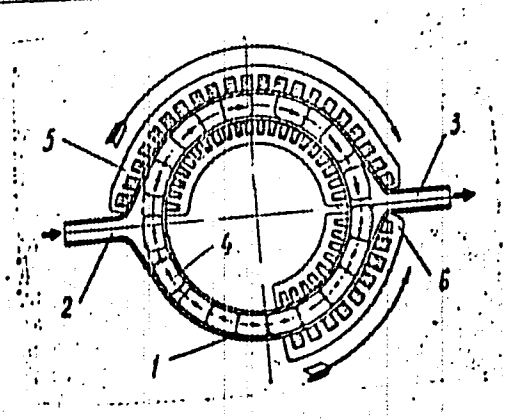

construction of the described pump. Orig. art. has: 5 figures.

SUB CODE: 13/ SUBM DATE: 01Nov65/ ORIG REF: 005

Card 2/2

ACC NR: AP7000368 SOURCE CODE: UR/0413/66/000/022/0154/0154

INVENTOR: Kirko, I. M.; Branover, G. G.; Ioffe, B. A.; Saulite, U. A.

ORG: none

TITLE: Plate-type hermetic pump. Class 59, No. 188847. [announced by the Institute of Physics, AN Latvian SSR (Institut fiziki AN Latviyskoy SSR)]

SOURCE: Izobreteniya, promyshlennyye obraztsy, tovarnyye znaki, no. 22, 1966, 154

TOPIC TAGS: pump, fluid pump, hydraulic pump

ABSTRACT: An Author Certificate has been issued for a plate-type hermetic pump consisting of a pipe-line inductor, plate holders, and plates. To simplify its design, the casing is made in the form of a closed annular duct. To assure its tight closing and for the automatic compensation of hydraulic-pressure wear on the operating plates' surfaces the plates' external axis of rotation is relative to the plate holder.

SUB CODE: 13/ SUBM DATE: 20Jul64/

Card 1/1 UDC: 621.66-213

IOFFE, B.D.; LEPIN, A.M., redaktor; SMIRNOV, P.S., tekhnicheskiy redaktor

[Engineering progress in machine tool manufacture] Za tekhnicheskii progress v stankostroenii. [Leningrad] Lenizdat, 1957. 105 p.
(Machine-tool industry) (MIRA 10:9)

IOFFE, B.D.

AUTHOR: Ioffe, B.D.

TITLE: For Technical Progress in Machine Tool Building (Za tekhnicheskiy progress v stankostroyenii)

PUB. DATA: Lenizdat, Leningrad 1957, 106 pp. 5,000 copies

ORIG. AG.: None given

EDITOR: Editor: Lepin, A.E.; Tech. Ed.: Smirnov, P.S.

PURPOSE: This book is intended for skilled workers, designers, technologists and other engineering and technical personnel in machine-and instrument-building enterprises.

COVERAGE: The book discusses the achievements and experience of the workers collective of the Leningrad Machine Tool Plant im. Ya. M. Sverdlov. The work of the collective was centered on the development of new machine tools of more

Card 1/4

For Technical Progress in Machine Tool Building (Cont.)

efficient design. For example, in the year 1956, the plant produced 22 different types of machine tools, with an average of 2374 parts for each type. A unification effort resulted in standardization of 84% of all sub-assemblies and components used. A report on the plant's experience in developing and introducing modern advanced technology is included. The examples of improved technological processes are described as useful for other metalworking enterprises. There are no references.

TABLE OF CONTENTS:

Card 2/4

For Technical Progress in Machine Tool Building (Cont.)

Card 3/4

For Technical Progress in Machine Tool Building (Cont.)

AVAILABLE: Library of Congress Call No. TJ 1185.I6
Card 4/4

Ioffe, B.

IOFFE, B D

N/5
662.31
.16

Za Tekhnicheskiy Progress V Stanostroyenni (For Technical Progress in Machine Construction) Leningrad, Lenizdat, 1957.
105 P. Illus., Diagrs.

IOFFE, B.F.

Application of the Relative Light Dispersion to the Analysis of Hydrocarbon Compounds. B. F. Ioffe. *Reports of the Academy of Sciences of U.S.S.R.*, v. 53, no. 5, 1946, p. 437-440. (In Russian.)

ASM-SLA METALLURGICAL LITERATURE CLASSIFICATION

APPROVED FOR RELEASE: 08/10/2001 CIA-RDP86-00513R000618620013-4"

IOFFE, B.G. (Moskva)

Feeding the newborn. Fel'd. i akush. 21 no.2:48-52 F '56. (MLRA 9:5)
(INFANTS (NEWBORN)--NUTRITION)