Miscellaneous

USSR

UDC: 539.4.019.1

SAMSONOV, G. V., ALEKSEYEVSKIY, V. P., BOZHKO, S. A., and YAROSH, V. V., Kiev

"The Effect of Explosion on Refractory Carbides"

Moscow, Fizika i Khimiya Obrabotki Materialov, No 5, Sep-Oct 73, pp 108-112

Abstract: The authors study the effect of explosion on refractory carbides. Hot pressed specimens of the refractory $TiC_{0.98}$, $ZrC_{0.96}$, and $NbC_{0.99}$ carbides were subjected to the action of shock waves. The reduction by explosion was carried out in steel cylindrical storage ampules with pressure in the detonation front of the explosive of 120 and 67 kbars. After the explosion, higher microhardness was observed in the case of niobium carbide and higher dislocation density in the case of all of the other carbides studied up to 10^{10} cm^{-2}.

1/1

2/2 039 UNCLASSIFIED

CIRC ACCESSICN NO--AT0120174 PROCESSING DATE--20NOV70

ABSTRACT/EXTRACT--(U) GP-0- ABSTRACT. THE NMR OF PRIME27 AL FOILS OF DIFFERENT THICKNESSES WAS OBTAINED IN A SUPERCONDUCTING SOLENOID OF SMALL DIMENSICNS MADE WITH TYPE 65-BT WIRE. THE POSITION OF THE NMR LINES OF PRIME63 CU, AS A FUNCTION OF THE POSITION OF THE SPECIMEN IN THE MAGNETIC FIELD, SHOWED THAT THE UNIFORMITY OF THE FIELD WAS 10 PRIME NEGATIVE 5-CM. THE SIGNALS OF PRIME27 AL WERE IN CLOSE AGREEMENT WITH AVAILABLE DATA (ALLEN AND SEYMOUR, 1963). THE KNIGHT SHIFT CAN BE OBTAINED WITH AN ACCURACY GREATER THAN PLUS OR MINUS 0.005 IN FIELDS SMALLER THAN OR EQUAL TO 30 KOE AT 13-200DEGREESK. THE SPECTRUM OF RUBY INDICATED THAT THE METHOD CAN BE USED IN MNR STUDIES OF METALS AND ALLOYS AS WELL AS OF CHEM. COMPDS. FACILITY: INST. FIZ. PROBL. IM. VAVILOVA, MOSCOW, USSR.

UNCLASSIFIED

1/2 039 UNCLASSIFIED PROCESSING DATE--20NOV70

TITLE--USE OF A SUPERCONDUCTING SOLENOID FOR NMR -U-

AUTHOR-(02)-ALEKSEYEVSKIY, N.YE., KRASNOPEROV, YE.P.

COUNTRY OF INFO--USSR

A

SOURCE--DOKL. AKAD. NAUK SSSR 1970, 190(6), 1325-8

DATE PUBLISHED--------70

SUBJECT AREAS--MATERIALS, PHYSICS

TOPIC TAGS--NMR, SUPERCONDUCTOR, SOLENOID, MAGNETIC FIELD, ALLOY DESIGNATION, WIRE, RUBY, SPECTRUM, NIOBIUM ALLOY, TITANIUM ALLOY, ALUMINUM FOIL/(U)65BT NIOBIUM TITANIUM ALLOY

CONTROL MARKING--NO RESTRICTIONS

DOCUMENT CLASS--UNCLASSIFIED

PROXY REEL/FRAME--1997/1381 STEP NO--UR/0020/70/190/006/1325/1328

CIRC ACCESSION NO--AT0120174

UNCLASSIFIED

USSR

Pis'ma v Zhurnal eksperimental'noy i teoreticheskoy fiziki, Vol. 13, No. 5, 5 Mar 71, pp 247-250

obtained by joint evaporation of Be and Zn-ep, films were prepared with laminar evaporation of Be and Zn-ep. Films were prepared with layer-by-layer evaporation of Be and Zn-ep. Measurements showed that the critical temperature of 7.7°K did not change with the addition of other layers from the critical temperature of the first layer of Be. The increase in critical temperature in films made with the joint evaporation of Be and zinc etioporphyrin is ascribed to the appearance of the electron-electron mechanism of superconductivity, and it is also hypothesized that a layer consisting of small crystals of Be separated by Zn-ep has a high transition temperature as a result of three-dimensional quantization of electrons in Be crystals. To check the validity of this hypothesis, experiments were conducted in which joint evaporation of Be and KCl was carried out. The results show that in this case the layers obtained by joint evaporation have high critical temperatures which are independent of the thickness of the layer. These layers also do not have a critical thickness, and superconductivity was maintained in them up to a thickness of ~1000 Å. It was also noted that these layers remain superconducting even after heating up to a temperature close to room temperature.

2/2

USSR

ALEKSEYEVSKIY, N. YE., TSEBRO, V. I., FILIPPOVICH, YE. I., Institute of Physical Problems, Academy of Sciences USSR

"Superconductivity of Beryllium Films Evaporated Together With Zinc Etioporphyrin"

Moscow, Pis'ma v Zhurnal Eksperimental'noy i Teoreticheskoy Fiziki, Vol. 13, No. 5, 5 Mar 71, pp 247-250

Abstract: The critical temperature of beryllium films evaporated together with zinc etioporphyrin (Zn-ep) on a substrate kept at liquid helium temperature was investigated. It is noted that beryllium films condensed on a cold substrate transform into the semiconducting state in the temperature range 5.4-8.6°K and that the magnitude of the critical temperature is a function of film thickness. The possibility of raising the transition temperature with a joint evaporation of a metallic and nonmetallic component has been discussed in the literature, and the use of Zn-ep as the nonmetallic component seemed of additional interest, since Zn-ep is one of the possible objects in which the electron-electron mechanism of superconductivity could be observed. A film with a thickness of ~500 Å was produced and the critical temperature of this film was equal to 10.2°K. Besides the films

1/2

Electricity & Magnetism

USSR UDC: None

ALEKSEYEVSKIY, N. Ye. and KRASNOPAROV, Ye. P., Institute of Physical Problems, USSR Academy of Sciences

"Magnetic Susceptibility of the Alloy $Nb_3Al_{0.75}Ge_{0.25}$"

Moscow, Pis'ma v ZhETF vol 16, No 9, 1972, pp 522-525

Abstract: This letter represents a sequel to an earlier paper (N. Ye. Alekseyevskiy, et al, Doklad na X Mezhdunarodnoy konferentsii po fizike i tekhnike nizkikh temperature v Varne -- Report to the Tenth International Conference on Low-Temperature Physics and Techniques, in Varena, 1971) which gave the results of measurements of the magnetic susceptibility of alloys of the system $Nb_3Al_{1-x}Ge_x$. The present paper describes measurements of one of the members of this system, $Nb_3Al_{0.75}Ge_{0.25}$, in the temperature interval of 300 to 19° K, in which magnetic weights with electromagnetic compensation were used. Curves are plotted for the susceptibility of the specimen as a function of the temperature and for the diamagnetic contribution added to the paramagnetic variation as the susceptibility varies with temperature. Interpretation of the curves is given.

1/1

USSR

Beryllium

USSR

UDC 536.48

ALEKSEYEVSKIY, N. Ye, Associate Member of the Academy of Sciences USSR, and ZAKOSARENKO, V. N., Institute of Physical Problems imeni S. I. Vavilov of the Academy of Sciences USSR

"Superconductivity of Beryllium Alloys"

Moscow, Doklady Akademii Nauk USSR, 1973, Vol 208, No 2, pp 303-306

Abstract: The superconductivity of beryllium alloys was investigated by measuring the critical temperature (Tc) of specimens prepared from Be with the ratio of resistences $R_{300}/R_{4.2\approx100-500}$ and their magnetic moment dependence on the magnetic field. The measurements revealed a superconductivity in the system of Be-Ga alloys. The Tc dependence on Ga-concentration shows that Tc-maximum corresponds with the Be_3Ga composition. Alloys of $MgZn_2$-type structure do not turn into the superconductive state at $T \gtrsim 1.5°K$, except Be_5Pt (probable structure of $MgCu_2$-type) which changes to superconductivity at 2.3 °K. Among Be alloys of $Be_{22}Ga$ and $Be_{13}Ga$ compositions, besides the previously known alloys, only $Be_{13}Ga$ was found superconductive (T=1.3 °K). Other new superconductive alloys are indicated. Three figures, one table, nine bibliographic references.

1/1

USSR

ALEKSEYEVSKIY, N. Ye., SAMARSKIY, Yu. A., Zhurnal Eksperimental'noy i Teoreticheskoy Fiziki, April 1973, pp 1342-1350

field strength at Sn^{119} nuclei is proportional to the mean magnetic moment per alloy atom. In a Pd-Co (2 at.%)-Sn(y) alloy the field strength H_{eff} at the Sn atomic nuclei remains constant, within the limits of experimental error, upon variation of the tin impurity from 0.2 to 6.0 at.%.

2/2

USSR

ALEKSEYEVSKIY, N. Ye., SAMARSKIY, Yu. A. (Institute of Physical Problems, USSR Academy of Sciences)

"Investigation of Magnetic Hyperfine Interaction for Impurity Atoms of Tin in Dilute Solid Pd-Co Solutions"

Moscow, Zhurnal Eksperimental'noy i Teoreticheskoy Fiziki, April 1973, pp 1342-1350

Abstract: Magnetic hyperfine interaction for impurity atoms of Sn^{119} in Pd-Co alloys is investigated by the γ-resonance technique for Co concentrations ranging from 0.3 to 5 at.% when direct exchange interaction between the 3d atoms should be absent. Magnetic measurements were performed to determine the Curie temperature (T_c) and mean magnetic moments of the alloys. It is found that the dependence of T_c on the Co content in Pd is in good agreement with the theoretical predictions. Investigations of the Mössbauer effect show that the effective magnetic field at the nuclei of impurity atoms of tin increases monotonically with an increase of the Co concentration in the alloys and reaches 9 ± 1 koersteds for a sample with the highest Co concentration (5 at.%). The field is positive. The magnetic measurements show that in the range of Co concentrations in Pd investigated, the effective

1/2

USSR

ALEKSEYEVSKIY, N. Ye., and SAMARSKIY, Yu. A., Doklady Akademii Nauk SSSR, Vol 109, No 5, 11 Apr 73, pp 1057-1059

the Mossbauer effect absorption spectra for various external field values. The strength of the effective field in the Sn nuclei was determined from the width of the absorption lines. It would be expected that a negative sign of the spontaneous field in the tin nuclei would lead to a minimum in the measured effective field. This was not observed, leading to the conclusion that the field was positive, a conclusion which agrees with other results for Sn in ferro-magnetic metals.

2/2

USSR

UDC 538.221

ALEKSEYEVSKIY, N. Ye., Corresponding Member of the Academy of Sciences of the USSR, and SAMARSKIY, Yu. A.

"On the Sign of the Effective Magnetic Field in the Nuclei of Sn Impurity Atoms in Dilute Solid Solutions of Pd-Co"

Moscow, Doklady Akademii Nauk SSSR, Vol 109, No 5, 11 Apr 73, pp 1057-1059

Abstract: Previous studies have shown that at low concentrations of Co in Pd the effective magnetic field on the nuclei of Co atoms is positive, although it is negative in pure Co, and that in areas of low Co concentration in Pd the effective field on the Sn nuclei increases with increasing Co concentration, while that on the Co nuclei decreases. This study covers the sign of the effective magnetic field on Sn nuclei in areas of low Co concentration where exchange interactions among the 3d-atoms are absent. It was found that the magnetization at saturation was directly proportional to the Co concentration and that the external field strength at which saturation occurred was always greater than the corresponding effective magnetic field in the nuclei of the tin atoms in the absence of an external field, so that the standard method of determining the sign of the spontaneous field by applying a saturating field could lead to an error. This was avoided by measuring

1/2

USSR

ALEKSEYeVSKIY, N. Ye., and ZAKOSARENKO, V. M., Pis'ma v ZhETF, Vol 18, No 2, 20 July 1973, pp 94-98

The critical perpendicular magnetic field through the film was also measured. This value was a practically linear function of temperature, changing at a rate of 6190 oersteds per degree Kelvin plus or minus 5% for the heated films and 5760 oersteds per degree Kelvin plus or minus 8% for the cold deposited films.

It is theorized that the unstable phases are probably characterized by weaker interactions among the atoms, so that the mean oscillation frequency would be lower and the average distance between atoms greater than in the stable phases, leading to a lower overlap of the ψ function of the electrons and the formation of narrower zones.

2/2

USSR

ALEKSEYeVSKIY, N. Ye., and ZAKOSARENKO, V. M., Institute of Physical Problems of the Academy of Sciences of the USSR

"The Superconductivity of Cold-Plated Films of Germanium Alloys With Elements of the Platinum Group"

Moscow, Pis'ma v ZhETF, Vol 18, No 2, 20 July 1973, pp 94-98

Abstract: Unstable superconducting modifications have been found in cold-deposited films of Ge-Pt and Ge-Pd alloys. The Ge-Pd system is used in a study of critical temperature as a function of the composition, and the dimensions of the critical magnetic fields are measured.

No superconductivity was observed in alloys of germanium with rubidium, osmium, or rhodium. The highest superconductivity temperature of the Ge-Pd film was three degrees K, which occurred for a value of 40% Pd; after the film was heated to 300°K, this value was only 2°K, but the peak still occurred at approximately 40% Pd. Heating to 300°K eliminated the superconductivity of the Ge-Pt films, even down to 1.0°K.

1/2

USSR UDC 536.48

ALEKSEYEVSKIY, N. Ye., Corresponding Member of the USSR Academy of Sciences, and ZAKOSARENKO, V. M.

"Superconductivity in Beryllium Alloys"

Moscow, Doklady Akademii Nauk SSSR, 11 January 1973, pp 303-306

Abstract: Listing a number of qualities of beryllium that make the metal interesting, among them the fact that some of its alloys have a relatively high, critical temperature, the authors discuss superconductivity in such metals. A description of the preparation process they used for the specimens in their investigations is given together with a table of different beryllium alloys and their critical and intermediate temperatures. As the table indicates, superconductivity was observed in Be-Ga alloys. Curves are given for in which it is shown that the maximum T_c is that of Be_3Ga, and for the magnetic moment as a function of the magnetic field for a specimen of this alloy. The authors thank V. F. Shamray for the x-ray structural analysis used on alloys of beryllium with metals of the platinum group.

1/1

USSR

ALEKSEYEVSKIY, N. Ye., NIZHANKOVSKIY, V. I., Zhurnal Eksperimental'noy i Teoreticheskoy Fiziki, Vol 65, No 3(9), Sep 73, pp 1076-1084

element). Analysis of the Hall constant as a function of the magnetic field showed that the breakdown field is approximately 110 kOe (about $8.75 \cdot 10^4$ amp/cm). Giant oscillations of the field-wise symmetric component ρ_{yx} are observed. The coherent model of breakdown gives an explanation of a change of phase shift between oscillations of ρ_{yx} and ρ_{xx} which is observed when the hexagonal axis of the specimen is not parallel to the magnetic field. The authors thank A. A. Slutsnin and M. I. Kalganov for discussing the results.

2/2

USSR

ALEKSEYEVSKIY, N. Ye., NIZHANKOVSKIY, V. I., Institute of Physical Problems, USSR Academy of Sciences

"Influence of Magnetic Breakdown on the Hall Effect in Beryllium"

Moscow, Zhurnal Eksperimental'noy i Teoreticheskoy Fiziki, Vol 65, No 3(9), Sep 73, pp 1076-1084

Abstract: Theoretical studies of magnetic breakdown are based on stochastic or coherent principles. In the stochastic approximation electron transitions from one classical orbit to another are considered independent. The coherent approximation accounts for phase relations in the wave functions of electrons multiply scattered by regions of the magnetic breakdown. The stochastic model is a satisfactory representation when describing the monotonic part of the resistance tensor, but certain peculiarities in the behavior of the oscillating part make it necessary to resort to the coherent model. In this paper the authors investigate the influence of magnetic breakdown on the nondiagonal element (ρ_{yx}) of the resistance tensor of beryllium. The experimental method used in the work is based on recording a signal proportional to ρ_{yx} as a function of ρ_{xx} (the diagonal

1/2

2/2 035 UNCLASSIFIED PROCESSING DATE--13NOV70

CIRC ACCESSION NO--AT0133215

ABSTRACT/EXTRACT--(U) GP-0- ABSTRACT. THE LIMITING RADIATION DOSES WERE STUDIED FOR EXPTL. TUNNEL DIODES PREPD. AT DIFFERENT TEMPS. FOR FUSION IN A VACUUM (500-650DEGREES), USING A GAAS BASE ALLOYED WITH ZN UNTIL A CARRIER CONCN. OF (5-6) TIMES 10 PRIME19-CM PRIME3 WAS REACHED. THE P-N JUNCTION WAS CREATED BY THE FUSION OF SN ON THE (111) SIDE, AND THE OHMIC CONTACT BY THE FUSION OF IN. AS THE RADIATION DOSE IS INCREASED, THERE IS A SMOOTH INCREASE IN THE EXCESS CURRENT. AT A DOSE OF 1 TIMES 10 PRIME16 NEUTRONS-CM PRIME2 THE CHARACTERISTICS CHANGE MARKEDLY; THE SEGMENT WITH A NEG. RESISTANCE DISAPPEARS ON THE RIGHT BRANCH. ISOTHERMAL HEATING AT 473DEGREES K BRINGS ABOUT THE APPEARANCE OF A "HILLY" STRUCTURE AT 0.9-1.1 V ASSOCD. WITH THE REARRANGEMENT OF GROUP DEFECTS AND PARTIAL ANNEALING OF THE DEFECTS INDUCED BY THE RADIATION. DIODES OBTAINED AT HIGH FUSION TEMPS. HAVE THE GREATEST RADIATION STABILITY. FACILITY: TOMSK. GOSUNIV., TOMSK, USSR.

UNCLASSIFIED

1/2 035 UNCLASSIFIED PROCESSING DATE--13NOV70

TITLE--VOLT AMPERE CHARACTERISTICS OF GALLIUM ARSENIDE P-N TUNNEL JUNCTIONS IRRADIATED BY FAST NEUTRONS -U-

AUTHOR-(05)-ALEKSEYEVA, Z.M., BRUDNYY, V.N., KRIVOV, M.A., MALYANOV, S.V., KHOMCHUK, O.N.

COUNTRY OF INFO--USSR

A

SOURCE--IZV. VYSSH. UCHEB. ZAVED., FIZ. 1970, 13(3), 146-9

DATE PUBLISHED-------70

SUBJECT AREAS--PHYSICS, ELECTRONICS AND ELECTRICAL ENGR.

TOPIC TAGS--VOLT AMPHERE CHARACTERISTIC, GALLIUM ARSENIDE PN JUNCTION, NEUTRON IRRADIATION, TUNNEL DIODE, FAST NEUTRON, RADIATION DOSE

CONTROL MARKING--NO RESTRICTIONS

DOCUMENT CLASS--UNCLASSIFIED

PROXY REEL/FRAME--3005/1218 STEP NO--UR/0139/70/013/003/0146/0149

CIRC ACCESSION NO--AT0133215

UNCLASSIFIED

USSR UDC: 517.9:621.039

ALEKSEYEVA, Ye. V., BARANTSEV, R. G.

"Use of a Kinetic Operator With Finite Interval of Departure for Calculating Near-Free Molecular Gas Flows"

V sb. Aerodinamika razrezh. gazov (Aerodynamics of Rarefied Gases--collection of works), No 5, Leningrad, Leningrad University, 1970, pp 83-90 (from RZh--Matematika, No 5, May 71, Abstract No 5B582)

Translation: A simplified analysis is made of the stationary hypersonic flow of a highly rarefied gas near a convex solid within the framework of the theory of first collisions. The approximation consists in averaging two quantities a priori: the interval of departure in the integral kinetic equation, and the velocity of surface reflection of particles. Integrated analytical expressions are obtained for local mass flows, momentum, and energy under near-free molecular streamline flow conditions. In the case of reflection along the normal, these quantities are computed as functions of the local angle of attack θ_0 and reflection velocity U_s. Complete aerodynamic coefficients at various values of U_s are found for a sphere. It is assumed that the collision cross section for the particles is constant. Authors' resumé.

1/1

USSR UDC: 533.601.18

ALEKSEYEVA, Ye. V., MIROSHIN, R. N.

"Two-Component Statistical Model of Processing of an Experiment in a Rarefied Gas"

Aerodinamika Razrezh. Gazov [Aerodynamics of Rarefied Gases -- Collection of Works], No 6, Leningrad University Press, 1973, pp 5-8 (Translated from Referativnyy Zhurnal Aviatsionnyye i Raketnyye Dvigateli, No 9, 1973, Abstract No 9.34.11)

Translation: A plan is suggested for processing of experimental data for the aerodynamic factors C_x, C_y based on the hypothesis of locality. In contrast to plans studied earlier, statistical independence of C_x from C_y is not assumed; therefore, the vector (C_x, C_y) is processed. The empirical factors are selected and calculated according to experimental data for (C_x,C_y) as functions of angle of attack measured in a low-density wind tunnel at M=5, Re_∞=25 with a series of cones with various degrees of blunting and solid angles. When independence of C_x and C_y was not assumed, the number of empirical coefficients was reduced, while the accuracy was retained. 4 Biblio. Refs. Resume

1/1

Titanium

USSR: [illegible]

[illegible], [illegible], [illegible], [illegible], and [illegible]

"Etching [illegible]-strength Titanium Alloys Without Hydrogenation"

Moscow, [illegible] Metallov, Vol. [illegible], no. [illegible], [illegible], [illegible]

Abstract: A review of earlier research shows that [illegible] extensively used in electrolytes comprising various combinations [illegible], sulfuric, hydrochloric, and nitric acids and salts containing [illegible] is attended by the undesirable effect of hydrogenation. [illegible] the direction of the cathodic process in electrolytes containing [illegible] and the determination of etching potential regions which will [illegible] depolarization and, consequently, hydrogenation, and will also [illegible] etching rate. The constructed ternary diagrams for the system [illegible] reflect the etching rate, stationary potentials, and the hydrogenation of the VT-15 alloy as functions of the component ratio. A correlation of [illegible] of two independent methods shows that the data of electrochemical studies may serve as a valid basis for selecting electrolytes for etching titanium alloys without hydrogenation. An electrolyte composition (30--40 wt.% HNO_3+6-16 wt.% HF) providing an adequate etching rate of the VT-15 alloy, good surface quality, and freedom from hydrogenation has been determined. Etching VT-14, VT-15, and VT-16 high-strength titanium alloys in an electrolyte containing 30 wt.% HNO_3+16 wt.% HF at room temperature involves no hydrogenation.

USSR

UDC 621. 398.08

KARACHENTSEVA, N. YA., FRANTSUZOVA, K.D., GONCHAROVA, R.I., and ALEKSEYEVA, YE. I., Institute of Technical Cybernetics, Academy of Sciences Belorussian SSR

"Device for Monitoring the Reliability of Telemetry Data"

USSR Authors' Certificate No 306485, Cl. G08c 19/28, H 03 k 13/38, filed 29 Apr 72, published 3 Aug 71 (from RZh-Avtomatika, Telemekhanika i Vychislitel'naya Tekhnika, No 1, Jan72, Abstract No 1A341P)

Translation: For monitoring the reliability of telemetry data a device is suggested which contains a clipping amplifier and subtraction unit connected via a threshold stage with an analyzer. In order to simplify the device and increase its reliability, it contains a differential filter and detectors, with the differential filter's input connected with the clipping amplifier's output, and the differential filter's outputs connected via the detectors with the subtraction unit's input.

1/1

USSR UDC 669.293.5'295'71:669.018.2:620.193.41

ANDREYEVA, V. V., ALEKSEYEVA, Ye. L., DONTSOV, S. N., and MOISEYEVA, I. S.

"Corrosion of Alloys of the Niobium-Titanium-Aluminum System"

V sb. Korroziya i zashchita met. (Metal Corrosion and Protection -- Collection of Works), Moscow, "Nauka," 1970, pp 49-54 (from RZh-Metallurgiya, No 12, Dec 70, Abstract No 12 I825 by the authors)

Translation: The article considers the mechanical properties, as well as the corrosion resistance of alloys of the Nb-Ti-Al system in 20% HCl and 40-75% H_2SO_4 at 40 and 100°. The authors present potentiostatic current-density/potential and corrosion-rate/potential curves taken in 75% H_2SO_4 at 140° using alloys with varying Ti and Al content. The corrosion resistance of the alloys is exponentially dependent on their atomic content of alloy components (Ti, Al), with Al most intensely affecting the deterioration of corrosion resistance. Three illustrations. Two tables. Bibliography of five titles.

1/1

Acc. Nr: AP0041518 Abstracting Service: CHEMICAL ABST. 4-70 Ref. Code: UR0078

ALEKSEYEVA V.V.

83474t **Effect of the structure of some phenols on the extraction of rubidium and cesium.** Rodionova, G. S.; Alekseeva, V. V.; Starostin, V. V. (USSR). *Zh. Neorg. Khim.* 1970, 15(1), 176-8 (Russ). Rb and Cs were extd. from pH 12-13 solns. by alkyl or aryl-substituted phenols. The distribution coeff. (D) depended on the structure of phenols, nature of solvent, and pH of soln. At pH 12.5, with kerosine as solvent and M concn. of extg. agents, D for Cs were (phenol, D): 2-(α-methylbenzyl)-4-chlorophenol, 85.9; 2-(α-methylbenzyl)-4-methylphenol, 20.3; 2-*sec*-butyl-4-methylphenol, 0.067; *m*-nonylphenol, 3.0. Values of D for 8 phenols at pH 12 and 13 and for sepn. of Cs and K, Cs and Rb, and Rb and K are given. Cs can be extd. selectively from solns. contg. large excess of K, Na, or Rb.

HMJR

LD

1/1

REEL/FRAME

19751386

A

USSR UDC 621.317.773

ALEKSEYEV, V. A. and KROTIKOV, V. D., Applicant: Scientific Research Institute of Radiophysics.

"Apparatus for Generation of Radio Interferometer Coherent Signals"

Moscow, Otkrytiya, izobreteniya, promyshlennyye obraztsy, tovarnyye znaki, No 1, 1970, p 65, Author Certificate No 258454 Class 21e.

Abstract: This author certificate introduces a device for generating radio interferometer coherent signals. The device consists of two receiving channels, each consisting of an amplifier, a bias cell and a generator. To decrease the effect of fluctuation of the electrical lengths of the coupling lines between antennas, the generator output of the first receiving channel is connected through the coupling line to the input of the bias cell of the second receiving channel, and also to the input of the bias cell of the channel, while the generator output of the second receiving channel is connected to the second input of the bias cell of the first channel and to the second input of its channel.

1/1

USSR

MERKULOVA, N. A., et al, Teplo- i massoperenos v tverd. telakh, zhidkostyakh i gazakh, Minsk, 1970, pp 237-244

narrow zones $2.5 \cdot 10^{-2}$ m. To fluctuations appeared in the narrower zones. On this basis, it is assumed that the source of fluctuations is the turbulent nature of the convective motion. N. DEMENKOV

2/2

Semiconductor Technology

USSR

MERKULOVA, N. A., KUKUSHKIN, N. A., SMIRNOV, V. A., KRAPUKHIN, V. V., and ALEKSEYEVA, T. P.

"Investigation of the Temperature Field During Zone Recrystallization of Cadmium and Tellurium"

V sb. Teplo- i massoperenos v tverd. telakh, zhidkostyakh i gazakh (Heat and Mass Exchange in Solids, Liquids, and Gases--collection of works), Minsk, 1970, pp 237-244 (from Rzh-Metallurgiya, No 8, Aug 70, Abstract No 8A56)

Translation: Experimental data on heat exchange at the front of crystallization in the process of zonal refining of Cd and Te is processed according to the criteria of similarity of convective heat exchange, taking into consideration Stefan's condition at the boundary of phase separation. Analysis of the criterial equation shows that the coefficient of heat-exchange decreases with an increase in the relative length of the molten zone. Spontaneous fluctuations of temperature were observed during registration of the temperature along the entire length of the molten zone of the ingot. The largest fluctuations were observed in the middle of the molten zone, where minimum amplitude for Cd was 1.2° at a frequency of 6-8 periods per minute. At the same time no fluctuations were observed in

1/2

USSR

UDC 666.192:535.323

ALEKSEYEVA, T. A., BAKHSHIYEVA, G. F., DOLADUGINA, V. S., Candidate of Chemical Sciences, and KULIKOVA, I. I.

"The Dependence of the Index of Refraction of Quarts Glass Upon the Method of its Production"

Leningrad, Optiko-Mekhanicheskaya Promyshlennost', No 4, Apr 72, pp 62-64

Abstract: In the paper are presented the results of an investigation of the refraction indexes of quartz glass obtained by various methods, from raw materials originating from various deposits. It is found that the value of the refraction index of quartz glass is determined mainly by the technology of its production, and depends practically not at all upon the initial materials. One table.

1/1

3/3 016 UNCLASSIFIED PROCESSING DATE--23OCT70

CIRC ACCESSION NO--AN0122883

ABSTRACT/EXTRACT--IN ADDITION, A VIOLATION OF THE PRESCRIBED ROUTINE MAY RESULT IN VERY SERIOUS COMPLICATIONS. THE TRADE UNIONS MUST CHECK DAILY TO SEE THAT THE ILL PERSONS ARE FOLLOWING ORDERS. MANY EFFECTIVE DRUGS (INCLUDING SUCH NEW ONES AS INTERFERON) ARE AVAILABLE TO COMBAT INFLUENZA. THEN TOO THERE ARE POPULAR REMEDIES LIKE ONIONS AND GARLIC. GARLIC INHIBITS THE ACTIVITY OF THE INFLUENZA VIRUS AND HAS A DISINFECTANT EFFECT ON THE RESPIRATORY TRACT. ONIONS ARE GOOD FOR TREATING COLDS. A WAD OF COTTON IS SOAKED IN ONION JUICE AND THEN INSERTED INTO THE NOSE FOR 10-15 MINUTES. THE PROCEDURE IS REPEATED 3-4 TIMES A DAY. THE JUICE SHOULD BE SQUEEZED OUT A LITTLE AT A TIME BECAUSE IT QUICKLY LOSES ITS THERAPEUTIC QUALITIES. IF A PERSON GETS A HEADACHE OR COLD, HE SHOULD GO SEE A DOCTOR AT ONCE AND DO WHATEVER HE SAYS. FACILITY: THERAPY DEPARTMENT. FACILITY: POLYCLINIC NO 2.

UNCLASSIFIED

2/3 016 UNCLASSIFIED PROCESSING DATE--23OCT70

CIRC ACCESSION NO--AN0122883

ABSTRACT/EXTRACT--(U) GP-0- ABSTRACT. MANY PEOPLE STILL CONSIDER INFLUENZA A VERY MILD DISEASE. THEY THINK SO, DESPITE THE FACT THAT THE BODY TEMPERATURE REMAINS HIGH FOR SOME TIME, THE HEAD ACHES, THERE ARE PAINS ALL OVER THE BODY AND DESPITE THE FACT THAT INFLUENZA MAY HAVE SERIOUS COMPLICATIONS. A PERSON WHO RECOVERS FROM INFLUENZA IS NOT SAFE FROM ANOTHER ATTACK BECAUSE HIS IMMUNITY (LACK OF SUSCEPTIBILITY TO A PARTICULAR DISEASE) DOESN'T LAST LONG, 1-3 YEARS, AND IT IS ONLY TO THE TYPE OF VIRUS THAT GAVE HIM THE DISEASE. THIS MEANS THAT A PERSON WHO RECOVERS FROM TYPE A INFLUENZA CAN BECOME SICK WITH TYPE B INFLUENZA. I AM WRITING THIS NOT TO FRIGHTEN ANYONE BUT TO POINT OUT THAT THE DISEASE SHOULD NOT BE TREATED FRIVOLOUSLY, ESPECIALLY NOW WHEN THE NEW ASIAN FLU EPIDEMIC THAT STARTED IN THE SECOND HALF OF 1969 HAS SPREAD TO MANY COUNTRIES. THE EPIDEMIC WAS CAUSED BY THE A SU82 HONG KONG 68 VIRUS. THE COURSE OF THIS INFLUENZA IS USUALLY SEVERE. IN SOME COUNTRIES THE EPIDEMIC TURNED INTO A NATIONAL DISASTER. SOME SCHOOLS SUSPENDED CLASSES, SOME BUSINESSES OPERATED INTERMITTENTLY, AND HOSPITALS DID NOT HAVE ENOUGH BEDS. THE SOVIET UNION NOW DOES A GREAT DEAL TO PREVENT MASS ILLNESSES. MORE PLACES ARE MADE AVAILABLE IN HOSPITALS. THE NUMBER OF MEDICAL PERSONNEL IS INCREASED IN CASE OF AN EPIDEMIC. DRUGS ARE STOCKPILED. VACCINATION CAMPAIGNS ARE CARRIED OUT, ETC. A PATIENT WHO RECEIVES A HOSPITAL CARD MUST FOLLOW THE DOCTOR'S ORDERS CLOSELY. HE CANNOT GO TO WORK, USE PUBLIC TRANSPORTATION, OR GO TO THE THEATER OR MOVIES, FOR A SICK PERSON CAN SPREAD THE DISEASE.

UNCLASSIFIED

1/3 016 UNCLASSIFIED PROCESSING DATE--23OCT70

TITLE--A DANGEROUS VIRUS -U-

A

AUTHOR--ALEKSEYEVA, T.

COUNTRY OF INFO--USSR

SOURCE--MOSCOW, MOSKOVSKAYA PRAVDA, 18 JAN 70, P 1

DATE PUBLISHED-------70

SUBJECT AREAS--BIOLOGICAL AND MEDICAL SCIENCES

TOPIC TAGS--INFLUENZA VIRUS, EPIDEMIOLOGY, VACCINATION, INTERFERON

CONTROL MARKING--NO RESTRICTIONS

DOCUMENT CLASS--UNCLASSIFIED
PROXY REEL/FRAME--1999/0835 STEP NO--UR/0011/70/000/000/0001/0001

CIRC ACCESSION NO--AN0122883
UNCLASSIFIED

USSR

ALEKSEYEVA, T., Moskovskaya Pravda, 18 Jan 70, p 1

able to combat influenza. Then too there are popular remedies like onions and garlic. Garlic inhibits the activity of the influenza virus and has a disinfectant effect on the respiratory tract. Onions are good for treating colds. A wad of cotton is soaked in onion juice and then inserted into the nose for 10-15 minutes. The procedure is repeated 3-4 times a day. The juice should be squeezed out a little at a time because it quickly loses its therapeutic qualities.

If a person gets a headache or cold, he should go see a doctor at once and do whatever he says.

3/3

USSR

ALEKSEYEVA, T., Moskovskaya Pravda, 18 Jan 70, p 1

I am writing this not to frighten anyone but to point out that the disease should not be treated frivolously, especially now when the new Asian flu epidemic that started in the second half of 1969 has spread to many countries. The epidemic was caused by the A_2 Hong Kong-68 virus. The course of this influenza is usually severe. In some countries the epidemic turned into a national disaster. Some schools suspended classes, some businesses operated intermittently, and hospitals did not have enough beds.

The Soviet Union now does a great deal to prevent mass illnesses. More places are made available in hospitals. The number of medical personnel is increased in case of an epidemic. Drugs are stockpiled. Vaccination campaigns are carried out, etc.

A patient who receives a hospital card must follow the doctor's orders closely. He cannot go to work, use public transportation, or go to the theater or movies, for a sick person can spread the disease. In addition, a violation of the prescribed routine may result in very serious complications. The trade unions must check daily to see that the ill persons are following orders.

Many effective drugs (including such new ones as interferon) are avail-

USSR

ALEKSEYEVA, T., Head of the Therapy Department, Polyclinic No 2

"A Dangerous Virus"

Moscow, Moskovskaya Pravda, 18 Jan 70, p 1

Translation: "Last November I got the flu. Now I believe that the number of persons with the disease has increased. Can I get sick again?

D. Kirnus,
Metalworker"

* * *

Many people still consider influenza a very mild disease. They think so, despite the fact that the body temperature remains high for some time, the head aches, there are pains all over the body and despite the fact that influenza may have serious complications.

A person who recovers from influenza is not safe from another attack because his immunity (lack of susceptibility to a particular disease) doesn't last long, 1-3 years, and it is only to the type of virus that gave him the disease. This means that a person who recovers from type A influenza can become sick with type B influenza.

Acc. Nr: AP0051525 Abstracting Service: CHEMICAL ABST. 5-70 Ref. Code: UR 0136

102247q Reprocessing of arsenic-containing products at the Severonikel combine. Alekseeva, R. K.; Ivanova, L. S.; Solovov, N. I. (USSR). *Tsvet. Metal.* 1970, 43(1), 17-19 (Russ). The material of anodes in electrolytical refining of Ni metal must be virtually As free, otherwise As contaminates the final product. In the Severonikel metallurgical combine operations most of the As is accumulated in so called irony cake and in dust collected by electroprecipitators. These materials are recycled because of their relatively high content of Ni, Cu, Co, Cd, etc. and, therefore, As should be removed from the cycle. At the same time, water pollution by As must be avoided. Based on lab. expts., a combined process for treating these materials was suggested. The Fe-cake is dissolved in H_2SO_4 and simultaneously SO_2 is introduced to reduce Fe(III). The liquor is deslimed and the filtrate is combined with a clear soln. resulting from the filtration subsequent to the electroprecipitator dust repulped in H_2O leaching. The combined soln. is treated with Cl, air, and $CaCO_3$ and then acidified to pH = 2.6-2.7 (1st pptn.). The filter cake contg. all of the As in the form of insol. Ca arsenates is removed. The filtrate is subjected to 2nd pptn. (CaO or $CaCO_3$, air, and Na_2CO_3 to pH = 7.0-7.2). Both the sepd. solid phase, i.e. a concentrate (3-5% of Ni), and the mother liquor contain virtually no As. V. Dvorak

REEL/FRAME 19811737

USSR

NEMILOV, S. V., et al., Zhurnal Prikladnoy Khimii, Vol 43, No 6, Jun 70, pp 1218-1225

MgO 0.80, K_2O 4.16, Na_2O 10.23 mole % was formulated, measurements on which in the 10^2 - 10^{13} poises (t = 600-1300°) range led to results that were readily reproducible.

2/2

USSR

UDC 666.22:539.551

NEMILOV, S. V., KRYLOVA, L. A., ROMANOVA, N. V., ZHUKOVA, A. N., ALEKSEYEVA, R. A., NOVIKOVA, M. P., BESPAL'KO, Z. P., and TYNYANKINA, A. N.

"Viscosity of Optical Glasses"

Leningrad, Zhurnal Prikladnoy Khimii, Vol 43, No 6, Jun 70, pp 1218-1225

Abstract: The viscosity η of 120 grades of glass ($\eta = 10^2 - 10^{13}$ poises) in relation to the temperature was determined. The results are listed in tables showing values of $\lg \eta$ for various temperatures t. The values included in the tables were obtained in part by interpolation and extrapolation of experimental values to cover the complete $\eta = 10^1 - 10^{16}$ poises range ($t = 312-2010^{\circ}$). Determinations at $10^4 - 10^{13}$ poises were carried out by the method of pressing in described earlier, those at $10^1 - 10^4$ poises by means of GOI automatic rotational viscosimeters. Measurements of η carried out by the first method on glass No 710 of the USA National Bureau of Standards led to results which coincided with those reported by A. Napolitano and E. G. Hawkins, J. Res. Nat. Bur. Stand., A. Phys. a. Ch., 68A, 439, 1964. The rotational viscosimeters were calibrated at $10^2 - 10^4$ poises on the basis of values reported for glass No 710. Data obtained for B_2O_3 by means of these viscosimeters agreed with those reported in the literature. A glass with the composition SiO_2 69.60, B_2O_3 11.09, Al_2O_3 2.00, As_2O_3 0.10, BaO 0.65, CaO 1.37,

1/2

2/2 023 UNCLASSIFIED PROCESSING DATE--13NOV70

CIRC ACCESSION NO--AP0131280

ABSTRACT/EXTRACT--(U) GP-0- ABSTRACT. A DIRECT RELATION BETWEEN A SENSITIZING DOSAGE AND ALLERGIC EFFECT WAS BROUGHT INTO EVIDENCE FOLLOWING A STUDY OF EXTRINSIC ALLERGY TO 10 OCCUPATIONAL CHEMICAL ALLERGENS IN GUINEA PIGS. AS REGARDS THE MAJORITY OF ASSAY ALLERGENS THIS RELATIONSHIP DID NOT CONCERN THE AREA OF TOXIC DOSES, SINCE POISONING IMPEDES THE DEVELOPMENT OF EXTRINSIC ALLERGY. SOME WEAK ALLERGENS, HOWEVER, CAN PRODUCE AN INTENSIVE SENSITIZATION ALSO WHEN SUPERIMPOSED ON POISONING. A QUESTION IS RAISED AS TO THE PRACTICABILITY OF SETTING UP MAXIMUM PERMISSIBLE STANDARDS FOR CHEMICAL ALLERGENS BY REFERRING TO THEIR SPECIFIC EFFECT. FACILITY: INSTITUT GIGIYENY TRUDA I PROFZABOLEVANNIY AMN SSSR.

UNCLASSIFIED

1/2 023 UNCLASSIFIED PROCESSING DATE--13NOV70

TITLE--EXPERIMENTAL STUDY OF THE INFLUENCE EXERTED BY THE DOSAGE OF A CHEMICAL ON THE INCIDENCE AND INTENSITY OF EXTRINSIC ALLERGY -U-

AUTHOR-(05)-ALEKSEYEVA, O.G., BARLOGOVA, S.G., DUYEVA, L.A., ZAGIDULIN, SH.Z., RABEN, A.S.

COUNTRY OF INFO--USSR

A

SOURCE--GIGIYENA TRUDA I PROFESSIONAL'NYYE ZABOLEVANIYA, 1970, NR 5, PP 19-23

DATE PUBLISHED--------70

SUBJECT AREAS--BIOLOGICAL AND MEDICAL SCIENCES

TOPIC TAGS--ALLERGIC DISEASE, SELECTIVE DRUG EFFECT, POISON EFFECT, MEDICAL EXPERIMENT

CONTROL MARKING--NO RESTRICTIONS

DOCUMENT CLASS--UNCLASSIFIED

PROXY REEL/FRAME--3004/0675 STEP NO--UR/0391/70/000/005/0019/0023

CIRC ACCESSION NO--AP0131280

UNCLASSIFIED

USSR

ALEKSEYEVA, O. G., and VASIL'YEVA, YE. V., Gigyena Truda i Professional'nyye Zabolevaniya, No 5, 1972, pp 23-36

period is prolonged and the result is a slowly progressing interstitial form of the disease. The latter can theoretically be prevented by prophylactic immunization with beryllium. (The low incidence of berylliosis among industrial workers may be due less to individual sensitivity to the element than to the development of tolerance for it).

2/2

Immunology

USSR UDC 616.24-003.668.4-092:616-097.3

ALEKSEYEVA, O. G., and VASIL'YEVA, YU. V., Institute of Industrial Hygiene and Occupational Disease, Academy of Sciences USSR

"Immunopathological Concept of the Pathogenesis of Berylliosis"

Moscow, Gigyena Truda i Professional'nyye Zabolevaniya, No 5, 1972, pp 23-35

Abstract: From studies on immunological processes in rats with experimentally induced berylliosis and a review of the literature, the authors conclude that immune and exogenous allergic reactions are the dominant features in the pathogenesis of the disease. The autoimmune nature of the process accounts for the systemic and wavelike course of the disease and for the efficacy of glucocorticoid therapy. A predisposition to autoimmunity apparently gives rise to the granulomatous form of the disease and shortens the latent period (hence the inverse relationship between the duration of the latent period and the severity of the disease). Beryllosis may be provoked by chronic disease of the lungs or other organs, pregnancy, surgery, or thyrotoxicosis. All these factors stimulate antibody production. If, however, these factors are absent, the allergy to beryllium develops slowly and the autoimmune process is either absent or insignificant. In this case the latent

1/2

USSR UDC 621.397.778.534.0

BRATCHENKO, V.N., and ALEKSEYEVA, N.V.

"The Connection Between Subtractive and Colorimetric Color Coordinates"

Moscow, Tekhnika Kino i Televideniya, No 7, Jul 72, pp 38-43

Abstract: The establishment of a quantitative connection between color separation and standard colorimetric characteristics is discussed. A transition method from color separation to colorimetric characteristics is suggested by which the characteristics of standard colors are calculated according to known color separating data. Functional coefficients for a simplified calculation of color coordinates were determined. It is demonstrated that the errrors in calculating colorimetric characteristics from simplified formulas do not exceed 2-3 color thresholds. A method of comparing different systems by color separating characteristics was developed, included are systems with taking the logarithm of primary signals and their subsequent linear transformation. This method makes it possible to compare the color reproduction of real systems for which the correct spectral characteristics are unknown, but the experimentally determined color separating characteristics are known. Three illustr., one table, twenty formulas, four biblio. refs.

1/1

Acc. Nr: AP0046253 Ref. Code: UR0511

PRIMARY SOURCE: Stomatologiya, 1970, Vol 49, Nr 1, pp 14-16

A

Alekseyeva, N.K. TESTS OF ALIMENTARY HYPERGLYCEMIA IN PERSONS WITH MULTIPLE DENTAL CARIES

Summary. The author examined a total of 73 persons of whom 56 suffered from multiple dental caries and 17 with intact teeth. The glycemic function of the liver and the functional activity of the insular apparatus of the pancreas were studied. An analysis of the results obtained made it possible to suppose that in persons with multiple dental caries in 76.8 per cent of cases there occurred a decline of the glycemic function of the liver and the functional activity of the insular apparatus.

1/1 DI

REEL/FRAME
19781371

2

UDC 614.882-084.48

USSR

ALEKSEYEVA, M. I., MANIKOV, L. M., TSETLIN, V. M., MAL'KOV, O. S., SAVEL'YEVA, A. R., and STEPANOVA, O. L., All-Union Institute of Disinfection and Sterilization, Moscow

"An Aerosol Method for the Disinfection of Ambulances"

Moscow, Zhurnal Mikrobiologii, Epidemiologii i Immunobiologii, No 4, 1973, pp 137-141

Abstract: Evaluation was made of the efficacy of different concentrations of hydrogen peroxide (I) aerosols in disinfecting ambulance interior and exterior surfaces. The surfaces were contaminated with Staphylococcus aureus or anthrax spores to a density of 10^5-10^7 cells/cm^2. The results showed that complete sterilization of the staphylococcus cells on interior surfaces could be attained with 3% I aerosol in 30 min at -6° to 22° and with an aerosol volume of 100 ml/m^2, whereas sterilization of the surfaces contaminated with the spores required 10% I and a volume of 200 ml/m^2. For the exterior surfaced 6% I, 400 ml/m^2, for 30 min was required to sterilize surfaces contaminated with staphylococcus, and 10% I was required for surfaces contaminated with the anthrax spores. Essentially similar results were obtained with calcium hypochlorite (5%, 100 ml/m^2, 60 min) and formaldehyde (10% and 20% for staphylococcus and anthrax spores, respectively, 100 ml/m^2, 30 min).

1/1

UDC 547.221+661.723-16

USSR

ALEKSEYEVA, L. V., BURDE, N. L., and TATARINOVA, G. P., Institute of Chemistry, Ural Branch of the Academy of Sciences, USSR

"Synthesis and Study of Compounds With Potential Biological Activity. VII. γ-Aminomethyl Derivatives of Glutamic Acid"

Leningrad, Zhurnal Organicheskoy Khimii, Vol 7, No 7, Jul 71, pp 1396-1399

Abstract: Two synthetic methods were studied for the preparation of novel γ-aminomethyl derivatives of glutamic acid. Reaction of the diethyl ester of 1-acetylaminoacetonedicarboxylic acid with formaline and various amines gave diethyl esters of 1-acetylamino-3-dialkylaminomethylacetonedicarboxylic acid. Catalytic reduction of these compounds carried out concurrently with hydrolysis of the protective groups by means of Clemmens reduction yields a mixture of partially reduced and final products, from which individual compounds could not be isolated. γ-Aminomethyl-D,L-glutamic acids were synthesized by reaction of tetraethylester of 1-acetylaminopropane-1,1,3,3-tetracarboxylic acid with paraform and various amines followed by hydrolysis and decarboxyllation of the products obtained.

1/1

Pharmacology and Toxicology

USSR UDC 547.466.6

BURDE, N. L., and ALEKSEYEVA, L. V., Ural Scientific Center, Acad. Sc. USSR, Institute of Chemistry

"Synthesis and Study of Compounds with Possible Biological Activity. VIII. Peculiarities of p-Nitrobenzoylation of γ-Substituted Glutamic Acids"

Leningrad, Zhurnal Organicheskoy Khimii, Vol 8, No 8, Aug 72, pp 1587-1591

Abstract: In an attempt to obtain intermedicate products for the synthesis of folic acid derivatives, p-nitrobenzoylation of γ-hydroxy-dialkylamino- and γ-hydroxydialkylaminomethyl derivatives of glutamic acid was studied by the Schotten-Baumann reaction. In the case of the γ-hydroxy-D,L-glutamic acid the reaction takes place at the amino group, leaving the hydroxy group untouched; it involves the closing of the erythro isomer into respective lactone rings. The p-nitro-benzoyl- γ-dialkylaminomethyl-D,L-glutamic acids could be separated into their diastereoisomers; it was not possible to separate the isomers of γ-dialkylamino derivatives. The yields obtained in the p-nitrobenzoylation of γ-dialkylamino- and -dialkylaminomethyl-D,L-glutamic acids were considerably lower than in case of the unsubstituted glutamic acid. Characteristic IR-absorption bands and melting points of the products have been tabulated.

1/1

USSR UDC 547.466.64 + 577.164.17.074

BURDE, N. L., ALEKSEYEVA, L. V., and ANDREYEVA, N. A., Ural Scientific Center, Academy of Sciences, USSR, Institute of Chemistry

"Synthesis and Study of the Compounds with Potential Biological Activity. XI. Synthesis of Diastereoisomers of Pteroyl- γ -hydroxy-D,L-Glutamic Acid and Their Antifolic Activity"

Leningrad, Zhurnal Organicheskoy Khimii, Vol 9, No 5, May 73, pp 1007-1011

Abstract: The diastereoisomers of pteroyl- γ -hydroxy-D,L-glutamic acid have been synthesized by the method of tricomponential condensation of 2,4,5-triamino-6-hydroxypyrimidine with α , β -dibromopropionic aldehyde and p-aminobenzoyl- γ -hydroxy-D,L-glutamic acid (threo- or erythro- configuration). Methodology has been developed for the resolution of the diastereoisomers of the latter compound. Comparison of the antifolic activity of γ - hydroxyfolic acid with γ -fluorofolic acids based on the dihydrofolatereductase assay showed the fluoro derivatives to be more active.

1/1

USSR

FEDOTENKOV, A. G., et al., Problemy Gematologii i Perelivaniya Krovi, Vol 16, No 8, 1971, pp 21-25

number of stem cells were preserved with rapid thawing. A parallel study of cell colony structures revealed that after the transplant of fresh bone marrow the predominant type was erythroblastic, and with frozen bone marrow -- undifferentiated. The largest number of stem cells were retained with freezing 1 degree per minute to -13°, then 10 degrees per minute to -196°, and with quick thawing in a water bath at 39°C for 1 minute. Stem cells subjected to extremely low temperature reveal a proliferating capacity in the body of an irradiated recipient later than the stem cells of fresh bone marrow, which explains the slower restoration of peripheral blood indexes in patients treated with frozen bone marrow.

2/2

USSR UDC 615.361.419.014.413

FEDOTENKOV, A. G., DANILOVA, L. A., and ALEKSEYEVA, L. P., Laboratory of Bone Marrow Conservation and Culture of the Central Institute of Hematology and Blood Transfusion, Ministry of Health USSR, Moscow

"The Effect of Various Freezing Regimes on the Proliferating Activity and Differentiation of Bone Marrow Stem Cells"

Moscow, Problemy Gematologii i Perelivaniya Krovi, Vol 16, No 8, 1971, pp 21-25

Abstract: A study was carried out of the effect of freezing and thawing on the preservation of stem cells, with quantitative determinations of such cells made by the method of cloning the hematopoietic tissue. The bone marrow of mice was prepared in TsOLIPK (Tsentral'nyy Ordena Lenina Nauchino-issledovatel'skiy Institut Gematologii i Perelivaniya Krovi; Central "Order of Lenin" Scientific Research Institute of Hematology and Blood Transfusion) No 3 solution and frozen with 15% glycerine solution and 10% serum solution. Four regimes were studied with different freezing times. The bone marrow was thawed out in a water bath with different thawing times, and transplanted into the spleen of lethally irradiated mice. On the 9th transplant day the mice were sacrificed and the stem cells studied in the excised spleens. The greatest

1/2

2/2 021 UNCLASSIFIED PROCESSING DATE--13NOV70

CIRC ACCESSION NO--AA0115783

ABSTRACT/EXTRACT--(U) GP-0- ABSTRACT. THE PROTECTION AGAINST UNDESIRABLE COATINGS WAS ACHIEVED BY ANODIC PASSIVATION OF THE OBJECT WHICH SHOULD BE NI PLATED. DURING THE ANODIC PASSIVATION THE CATHODE WAS IMMERSED INTO AN ALK. SOLN. LOCATED IN A POROUS CERAMIC BEAKER FOR SEPN. FROM THE ELECTROLYTE. FACILITY: CENTRAL SCIENTIFIC RESEARCH INSTITUTE OF TECHNOLOGY AND MACHINE BUILDING.

UNCLASSIFIED

1/2 021 UNCLASSIFIED PROCESSING DATE--13NOV70

TITLE--PROTECTION AGAINST UNDESIRABLE COATINGS IN NICKEL PLATING -U-

AUTHOR-(03)-RYABCHENKOV, A.V., VELEMITSINA, V.I., ALEKSEEVA, L.N.

COUNTRY OF INFO--USSR

SOURCE--GER. OFFEN. 1,802,348

DATE PUBLISHED--23APR70

SUBJECT AREAS--MATERIALS, MECH., IND., CIVIL AND MARINE ENGR

TOPIC TAGS--NICKEL PLATING, METAL COATING, CHEMICAL PATENT

CONTROL MARKING--NO RESTRICTIONS

DOCUMENT CLASS--UNCLASSIFIED

PROXY REEL/FRAME--1994/1984 STEP NO--GY/0000/70/000/000/0000/0000

CIRC ACCESSION NO--AA0115783

UNCLASSIFIED

USSR

SALDABOL, N. G., et al., Khimiko-Farmatsevticheskiy Zhurnal, Vol 4, No 7, 1970, pp 20-22

The minimum concentration of furylazabicycles inhibiting microorganismic growth is 100 mcg/ml, while for phenyl analogs it rises sharply. For example, for 6-phenylimidazo(2,1-b)thiazole and its n-nitroderivative the minimum concentration inhibiting growth of Staphylococcus aureus, Salmonella typhi, and Escherichia coli is 7800 mcg/ml. Thus, replacement of the phenyl with the furyl group leads to an abrupt intensification of antimicrobial action, which is intensified still further in the case of the nitrofuryl-lazabicycles (VIIc, VIIIC and IXc). The strongest bacteriostatic action is shown by nitrofurylimidazopyridine (VIIc), buts its aromatic analog 2-p-nitrophenylimidazo/1,z-a/pyridine is only slightly active.

3/3

USSR

SALDABOL, N. O., et al., Khimiko-Farmatsevticheskiy Zhurnal, Vol 4, No 7, 1970, pp 20-22

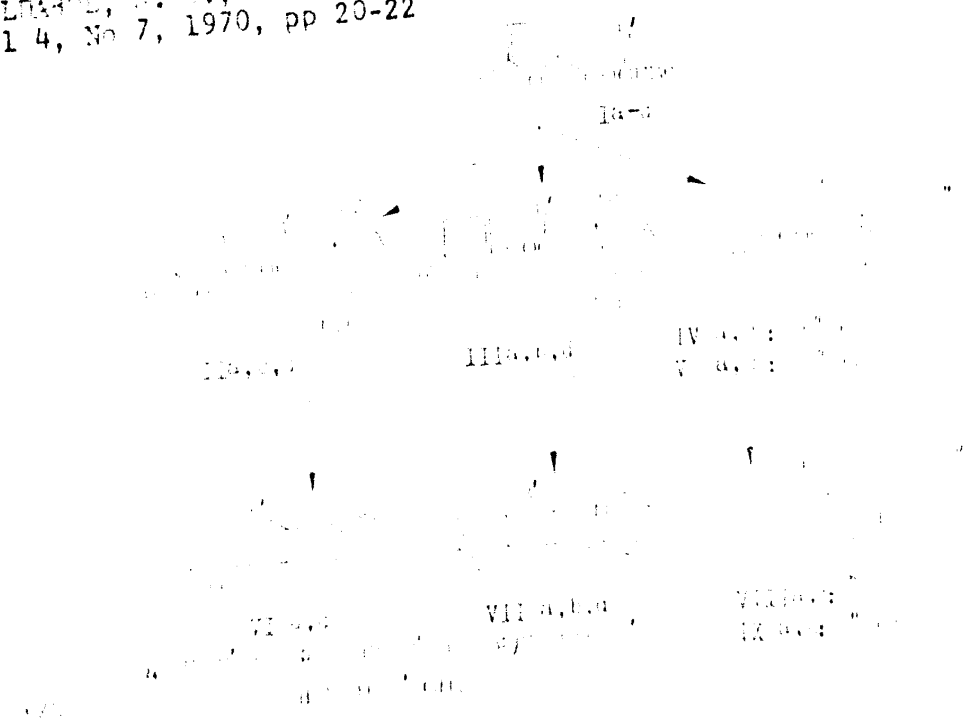

USSR

UDC 615.28:547.757.012

SALDABOL, N. O., ALEKSEYEVA, L. N., BRIZGA, B. A., KRUZMETSA, L. V., and GILLER, S. A., Institute of Organic Synthesis, Riga, Academy of Sciences Latvian SSR

"Synthesis and Antimicrobial Action of Furyl-Substituted Indolizine, Imidazo (1,2-a)pyrimidine, and Imidazo(2,1-b)thiazole"

Moscow, Khimiko-Farmatsevticheskiy Zhurnal, Vol 4, No 7, 1970, pp 20-22

Abstract: Continuing work on the synthesis and study of antimicrobial properties of furyl-substituted heterocyclic condensed systems with apcial nitrogen atoms, the authors obtained (5-R-furyl-2)substituted indolizine (VIa, VId), imidazo(1,2-a)pyridine (VIIa, VIIb, and VIId), and imidazo92,1-b)thiazole (VIIIa-VIIIc and IXa, IXc) (R = H, Br, and NO_2) and described their antimicrobial action.

1/3

2/2 010 UNCLASSIFIED PROCESSING DATE--30OCT70

CIRC ACCESSION NO--AP0128029

ABSTRACT/EXTRACT--(U) GP-0- ABSTRACT. THE REDN. OF 8,METHYL,5,6,7,8,TETRAHYDRO,1,5,INDANDION,4,YLACETIC ACID (I) IN MEOH OVER PD-CACO SUB3 CATALYST GAVE ISOMERIC MIXTS. CONTG. 1:1 MIST. OF ANTI,CIS,8,METHYLHEXAHYDRO,1,5,INDANDION,4,YLACETIC ACID (II) AND ITS SYN,CIS,ANALOG (IIA). WHEN THE REDN. WAS CARRIED OUT IN ACOH CONTG. PD,BASO SUB4 BESIDES II AND IIA ALSO ABOUT THE SAME AMT. OF ANTI,TRANS,II ISOMER IIB) WAS FORMED. THE REDN. OF ET I ESTER WITH NABH SUB4 GAVE 1,HYDROXY DERIV. (III) OF I. THE HYDROGENATION OF III IN MEOH CONTG. PD,C CATALYST GAVE 1:1:2.5 MIST. OF 1,HYDROXY ANALOG OF IIB, 1,HYDROXY ANALOG OF II, AND 1,HYDROXY ANALOG OF IIA. THE OXIDN. OF 1,HYDROXY ANALOG OF IIB GAVE IIB. THE SYNTHESIS OF ANTI,TRANS,BICYCLIC SYSTEMS (SUCH AS IIB) IS OF INTEREST IN THE TOTAL SYNTHESIS OF STEROIDS.

FACILITY: VSES. NAUCH.,ISSLED. KHIM.-FARM INST. IM. ORDZHONIKIDZE, MOSCOW, USSR.

UNCLASSIFIED

1/2 010 UNCLASSIFIED PROCESSING DATE--30OCT70

TITLE--CATALYTIC REDUCTION OF 8,METHYL,5,6,7,8,TETRAHYDRO, 1,5,INDANDION,4,YLACETIC ACID AND ITS DERIVATIVES -U-

AUTHOR-(04)-GRINENKO, G.S., POPOVA, YE.V., MAKSIMOV, V.I., ALEKSEYEVA, L.M.

COUNTRY OF INFO--USSR

A

SOURCE--ZH. ORG. KHIM. 1970, 6(4), 732-6

DATE PUBLISHED--------70

SUBJECT AREAS--CHEMISTRY, BIOLOGICAL AND MEDICAL SCIENCES

TOPIC TAGS--CHEMICAL SYNTHESIS, STEROID, ACETIC ACID, CHEMICAL REDUCTION, AROMATIC KETONE, HYDROGENATION, ISOMER, CATALYST, PALLADIUM

CONTROL MARKING--NO RESTRICTIONS

DOCUMENT CLASS--UNCLASSIFIED

PROXY REEL/FRAME--3002/0459 STEP NO--UR/0366/70/006/004/0732/0736

CIRC ACCESSION NO--AP0128029

UNCLASSIFIED

USSR

GRINENKO, G. S., et al., Zhurnal Organicheskoy Khimii, Vol 6, No 4, Apr 70, pp 736-739

m.p. 211-213° and 2-methyl-4-phenyl-5-tolyl-3-furanecarboxylic acid, m.p. 193-195°. The structures of all of the above compounds were supported by IR and PMR spectra. Cyclization occurs very easily; evidently after the esters are protonated at the carbonyl oxygen atom, the cyclization occurs analogously to cyanosubstituted compounds.

2/2

UDC 547.665

USSR

UDC 547.834.4+541.634

MIKHLINA, YE. YE., YANINA, A. D., ALEKSEYEVA, L. M., TURCHIN, K. F., SHEYNKER, YU. N., YAKHONTOV, L. N., DYUK, R. F., RICHARD, A. YA., and KATRITSKIY, A. R., All-Union Scientific Research Pharmaceutical Chemical Institute imeni S. Ordzhonikidze, Moscow and Chemistry Department, University of East Anglia at Norwich, Great Britain

"Reaction of Benzo [b]quinuclidine with Electrophilic Reagents"

Riga, Khimiya Geterotsiklicheskikh Soyedineniy, Academy of Sciences Latvian SSR, No 3, 1971, pp 385-388

Abstract: Electrophilic substitution of benzo [b] quinuclidine (I) was studied: bromination, nitration, and sulfochlorination. These results are closely related to the absence of p-π electron interaction in I. When I is brominated in several different solvents (acetic acid, chloroform) at 0, 20, and 60° (with or without catalysts), only the perbromide of I and a molecular complex of I with bromine were obtained. The absence of the p-π mesomeric effect in I is shown by its pK. In contrast to bromination, nitration and sulfochlorination of I form products of electrophilic substitution. When I is treated with a nitrating mixture at temperatures from -4 to -7°, mononitrobenzo [b] quinuclidine is formed. When I is treated with chlorosulfonic acid, first at 0° and then at 50°, benzo [b]quinuclidine-sulfonyl chloride is formed.

1/1

USSR

UDC 547.822.7.07

NIKITSKAYA, YE. S., ALEKSEYEVA, L. M., SHEYNKER, YU. N., and YAKHONTON, L. N., All-Union Scientific Chemical-Pharmaceutical Research Institute imeni S. Ordzhonikidze, Moscow

"Synthesis of N'-Substituted 4-Aminopiperidines With a Shielded Nitrogen Atom"

Riga, Khimiya Geterotsiklicheskikh Soyedineniy, No 12, Dec 71, pp 1672-1678

Abstract: A detailed study was carried out of the triacetoneamine cyanohydrine (I) reaction with ammonia and various amines. It has been shown that (I) reacts with fatty and aromatic amines in methanol at 0-20°C yielding respective 2,2,6,6-tetramethyl-4-cyano-4-amino piperidines (II). Aromatic amines do not react under these conditions. The α-aminonitriles (II) are thermally unstable, and when heated above 50°, they split HCN, forming tetramethylpiperidines. Decyanation of (II) occurs also easily when these compounds are reduced with $LiAlH_4$, yielding pure N'-substituted-2,2,6,6-tetramethyl-4-aminopiperidines (III). Reacted with formic acid and formalin, (III) are easily methylated at the piperidine nitrogen atom. In cases where the exocyclic nitrogen atom happens to be a secondary amine, it also becomes methylated. The products -- N',N-disubstituted 1,2,2,6,6-pentamethyl-4-aminopiperidines are strong bases; they give stable dihydrochlorides.

1/1

UDC 547.[illegible]

USSR

KOCHESHKOV, N. K., [illegible] A. A., [illegible]
/ALEKSEYEVA, L. M. [illegible] Institute Chemical-Pharm[illegible]
Imeni S. Ordzhonikidze, Moscow

"Studies in the Pyrrole Series. XXIII. [illegible]
1H-Pyrrolo [3,2-b]pyridine and 4H-Pyrrolo [3,2-c]pyridine[illegible]

Riga, Khimiya Geterotsiklicheskikh Soyedineniy, No 6, [illegible]

Abstract: [illegible]
and [illegible]
was [illegible]
are [illegible]
Dilithio [illegible]
with [illegible]
dilithio [illegible]

1/1

USSR

UDC 541.62;547.785.5'789.61'854.4;543.422.25.4

ALEKSEYEVA, L. M., PERESLENT, YE. M., SHEYNKER, YU. N., KOCHERGIN, P. M., KRASOVSKIY, A. N., and KURNAZ, B. V., All Union Scientific Chemical-Pharmaceutical Research Institute imeni S. Ordzhonikidze, Moscow

"Ring-Chain Tautomerism of S-Acylalkyl Substituted Imidazoles and Annelated Imidazole Systems"

Riga, Khimiya Geterotsiklicheskikh Soyedineniy, No 8, Aug 72, pp 1125-1131

Abstract: The ring-chain tautomerism of S-acylalkyl substituted 2-mercapto-4,5-diphenylimidazole, 2-mercaptobenzimidazole, 2-mercaptonapht[1,2-d]imidazole, 8-mercaptopurine, 8-mercaptotheophyline, and 2-mercaptoimidazoline has been studied by PMR and IR spectroscopy. Depending on the structure of aldehyde or ketone radical, or on the type of heterocycle condensed with the imidazole nucleus, depending on the state of the aggregate and on the type of solvent used, these compounds can exist as open heterylmercaptoaldehydes (ketones), as cyclic 3-hydroxy derivatives of imidazothiazoline systems or as mixed tautomeric forms. When a substituent exists on position 2 of the thiazoline ring, the cyclic compounds exist as a mixture of two disstereoisomeric forms.

1/1

UDC 543.422.25:546.740'785.5

USSR

ALEKSEYEVA, L. M., DVORYANTSEVA, G. G., PERSIANOVA, I. V., SHEYNKER, YU. N., PALEY, R. M., and KOCHERGIN, P. M., All Union Scientific Chemical-Pharmaceutical Research Institute imeni S. Ordzhonikidze, Moscow

"Protonization of the Derivatives of Pyrrolo[1,2-a]benzimidazole"

Riga, Khimiya Geterotsiklicheskikh Soyedineniy, No 8, Aug 72, pp 1132-1137

Abstract: Protonization of a series of pyrrolo[1,2-a]benzimidazole derivatives in trifluoroacetic acid has been studied by PMR method. The 1,3-unsubstituted compounds protonize exclusively on the C_1 atom. Pyrrolobenzimidazoles with a methyl substituent on position 1 form a mixture of two protonized forms under identical conditions, corresponding to the addition of a proton to C_1 and C_3 respectively. Relative content of the C_3 protonized form decreases gradually from 81% to 18% going from a compound unsubstituted in position 3 to the respective 3-phenyl- and 3-methyl derivatives. Basicity constants of pyrrolobenzimidazoles decrease symbatically with the increase of the relative content of this form. Relative proton acceptor capability of indolinine, pyrrolo[1,2-a]imidazole and pyrrolo[1,2-a]benzimidazole has been calculated from the protonization data and from indexes of reactivity.

1/1

USSR

UDC 574.754.755.756.757

PETROVA, G. N., SHNER, V. F., ALEKSEYEVA, L. M., and SUVOROV, N. N., Moscow Chemico-Technological Institute imeni Mendeleyev, Moscow

"Derivatives of Indole. LXXXIII. Synthesis of Indole and 5-Bromoindole From 2-Naphthol and 6-Bromo-2-naphthol"

Riga, Khimiya Geterotsiklicheskikh Soyedineniy, No 6, Jun 73, pp 753-755

Abstract: Upon the oxidation of 2-naphthol and 6-bromo-2-naphthol with Na_2MoO_4 + 40% H_2O_2 in glacial acetic acid, alpha-carboxycinnamic acids were obtained. These acids were converted into the corresponding diamides which, on being subjected to the Hofmann reaction with NaOCl and KOH, yielded indole and 5-bromoindole, respectively. The oxidation of 5-nitro-2-naphthol under similar conditions led to the formation of the gamma-lactone of 6-nitro-2-carboxycinnamic acid. This compound could be converted into its amide by successive treatment with PCl_5 and liquid NH_3.

1/1

USSR UDC 621.317.616

ALEKSEYEVA, L. I., YEVSEYEV, V. I., YEGOROVA, N. P., FAYGENBLYUM, H. A.

"A Curve-Tracing Instrument"

Moscow, Otkrytiya, izobreteniya, promyshlennyye obraztsy, tovarnyye znaki, No 2, Jan 71, Author's Certificate No 290467, division H, filed 1 Mar 68, published 22 Dec 70, p 164

Translation: This Author's Certificate introduces a curve-tracing device for finding the frequency response of communications channels by direct comparison on the screen of a cathode ray tube. The device contains a stepped frequency response indicator, a wobbulator, and a module for studying frequency responses. As a distinguishing feature of the patent, in order to automate the process of measuring frequency responses of communications channels and to obtain a stepped reference response, a fixed attenuator is connected between the wobbulator and the channel to be measured, while the comparison circuit contains attenuators connected to the above-mentioned stepped frequency response indicator.

1/1

AA0044276

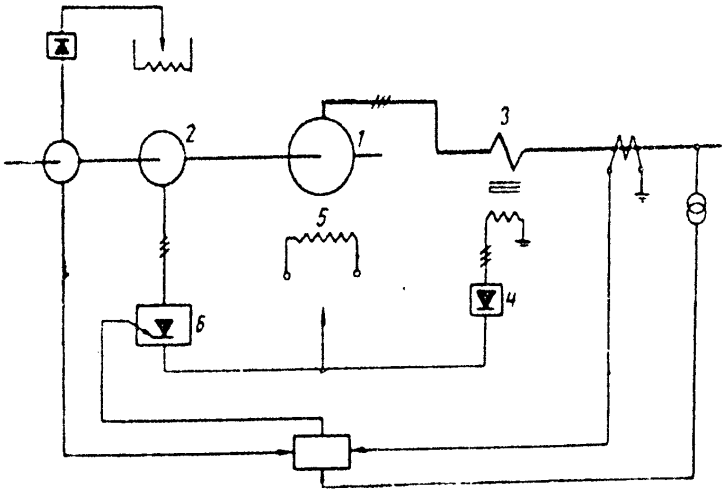

E13

2/2

19770805

AA 0 044276

UR 0482

Soviet Inventions Illustrated, Section II Electrical, Derwent, 1/70

243695 SYNCHRONOUS GENERATOR EXCITER UNIT in which the exciter itself is connected to an auxiliary a.c. generator on the same shaft as the synchronous generator 1. This simplifies construction and increases reliability, In order to broaden the range of regulatable circumstances, a controllable semi-conductor rectifier 6 is used as the exciter. 17.10.62. as 799210/24-7. Ya.N.SHTRAFUN et al. (29.9.69.) Bul.17/14.5.69. Class 21d^2. Int.Cl. H02p.

AUTHORS: Shtrafun, Ya. N., Alekseyeva, L. G., Lapayev, K. V.

4

1/2

19770804

USSR UDC 621.313.322-81.013.8

ALEKSEYEVA, L. G., LAPAYEV, K. V., SHTRAFUN, YA. N., SHUSTERMAN, M. N.

"Study of the Excitation System of the 500 Megawatt Turbo Generator"

Elektrosila -- V sb. (Electric Power -- Collection of Works), No 28, Leningrad, Energiya Press, 1970, pp 15-18 (from RZh-Elektrotekhnika i Energetika, No 2, Feb 71, Abstract No 2 Ye124)

Translation: All-around testing of the TVV-500-2 turbo generator with an excitation system and an automatic excitation regulator have been performed. A more powerful subexciter with permanent magnets (30 kilowatts) has been used for the first time in the excitation system of the TVV-5-0-2 turbo generator to feed the automatic regulator, and the PP measuring element, to improve the speed of the system. The excitation system studies were performed in the idling and short circuit modes of the turbo generators. The characteristics of the excitation system obtained coincide closely with the calculated characteristics. There are 3 illustrations.

1/1

2/2 015 UNCLASSIFIED PROCESSING DATE--02OCT70

CIRC ACCESSION NO--AP0112525

ABSTRACT/EXTRACT--(U) GP-D- ABSTRACT. REDN. OF XC SUB6 H SUB3 (SH SUB2 CL) SUB2-2,4 WITH ZN AMALGAM GAVE XC SUB6 H SUB3 (SH) SUB2-2,4 (I) (X IS H, MF, OR CL). THE ACTION OF CHCLF SUB2 ON I IN NAOH SOLN. GAVE XC SUB6 H SUB3 (SCHF SUB2) SUB2-2,4 WHICH WERE OXIDIZED WITH CRO SUB3-AC SUB2 O TO XC SUB6 H SUB3 (SO SUB2 CHF SUB2) SUB2-2,4. SIMILARLY, STARTING WITH XC SUB6 H SUB2 (SO SUB2 CL) SUB3-2,4,6, WERE PREPD. XC SUB6 H SUB2 (SO SUB2 CHF SUB2) SUB3 2, 4,5 (II) (X IS NH SUB2 OR CL). THE REACTION OF P-F SUB2 CHSC SUB6 H SUB4 NH SUB2 WITH NANO SUB2-HCL-SO SUB2 GAVE P-FF SUB2 CHSC SUB6 H SUB4 SO SUB2 CL, WHICH WAS CONVERTED INTO P-F SUB2 CHO SUB2 SC SUB6 H SUB4 SO SUB2 CHF SUB2 (III) AS ABOVE. PASSING CHCLF SUB2 THROUGH AN ALK. SOLN. OF P- OR O-HOC SUB6 H SUB4 OH CONTG. NA SUB2 S SUB2 O SUB4 ALSO GAVE III OR ITS O-ANALOG. THE REACTION OF MEONA WITH II (X EQUALS CL) GAVE A MIST. OF II (X EQUALS MEO) AND II (X EQUALS HO). THE REACTION OF N SUB2 H SUB4 WITH II (X EQUALS CL) GAVE II (X EQUALS H SUB2 NNH).

UNCLASSIFIED

1/2 015 UNCLASSIFIED PROCESSING DATE--02OCT70

TITLE--BIS AND TRIS(DIFLUOROMETHYLTHIO AND SULFONYL)ARENES AND ARYL DIFLUOROMETHYL ETHERS -U-

AUTHOR-(04)-SEDOVA, L.N., GANDELSMAN, L.Z., ALEKSEYEVA, L.A., YAGUPOLSKIY, L.M.

COUNTRY OF INFO--USSR

SOURCE--ZH. ORG. KHIM. 1970, 6(3) 568-73

DATE PUBLISHED-------70

SUBJECT AREAS--CHEMISTRY

TOPIC TAGS--FLUORINATED ORGANIC COMPOUND, SULFONE, ARYL ETHER, CHEMICAL REDUCTION, HYDRIAZINE

CONTROL MARKING--NO RESTRICTIONS

DOCUMENT CLASS--UNCLASSIFIED

PROXY REEL/FRAME--1992/1931 STEP NO--UR/0366/70/006/003/0568/0573

CIRC ACCESSION NO--AP0112525

UNCLASSIFIED

ALEKSEYEVA L. A.

Acc. Nr. AP0041689 Abstracting Service: CHEMICAL ABST. 4/70 Ref. Code UR0366

89975d **Fluorination of aromatic polycarboxylic acids by sulfur tetrafluoride. III. Fluorination of benzenetetracarboxylic acids.** Burmakov, A. I.; Alekseeva, L. A.; Yagupol'skii, L.M. (Inst. Org. Khim., Kiev, USSR). *Zh. Org. Khim.* 1970, 6(1), 144–8 (Russ). Heating $HO_2CC_6H_2(CO_2H)_3$-2,3,5 with SF_4 in an autoclave ≦200° gave 2,4,6-$(F_3C)_3C_6H_2COF$ (I). However, the fluorination of $HO_2CC_6H_2(CO_2H)_3$-2,3,4 gave 4,7-bis(trifluoromethyl)-1,1,3,3-tetrafluorophthalan (II). The structure of I was proven by its stepwise conversion to 2,4,6-$(F_3C)_3C_6H_2CONH_2$ (III), 2,4,6-$(F_3C)_3C_6H_2NH_2$ (IV), 3,5-$(F_3C)_2C_6H_3CF_3$, and $HO_2CC_6H_3(CO_2H)_2$-3,5. Heating III with P_2O_5 gave 2,4,6-$(CF_3)_3C_6H_2CN$. The diazotization of IV followed by coupling with 3-$MeC_6H_4N(CH_2CH_2OH)_2$ gave 2,4-$Me[(HOCH_2CH_2)_2N]C_6H_3N{:}NC_6H_2(CF_3)_3$-1,3,5. The structure of II was proved by its hydrolysis to 2,3,6-$HO_2C(F_3C)_2C_6H_2CO_2H$, which was converted to 4,7-bis(trifluoromethyl)phthalide (V). The treatment of V with PCl_5 gave 4,7-bis(trifluoromethyl)-1,1,3,3-tetrachlorophthalan, which reacted with SbF_3 to give II. CPJR

REEL/FRAME
19751566

Acc. Nr. AP0053626 Abstracting Service: CHEMICAL ABST. 5/70 Ref. Code UR0366

110915w Difluoroiodine derivatives of organic compounds. Lyalin, V. V.; Orda, V. V.; Alekseeva, L. A.; Yagupol'skii, L. M. (Inst. Org. Khim., Kiev, USSR). *Zh. Org. Khim.* 1970, 6(2), 329-32 (Russ). The reaction of $RI{:}O$ or $RI{:}O_2CCF_3)_2$ (R is Ph, p-MeC_6H_4, o-$O_2NC_6H_4$, m-FC_6H_4, p-FC_6H_4, β-pyridyl, C_6F_5, or F_3CCF_2) with SF_4 in CH_2Cl_2 at $-20°$ gave 59-100% RIF_2. CPJR

1/1

REEL/FRAME
19830681

7

USSR

KOZINA, G. S., et al, Radiotekhnika i Elektronika, Vol 15, No 2, 1970, pp 365-367

Abstract: frequency is plotted in a graph which shows that P_{pulse} decreases with increasing frequency above 200 Hz and that at f = 10kHz is only 17 percent of the maximum value. The graph also shows that the average power increases to a maximum at 5-6kHz. An efficient way for increasing the peak power is to increase the beam current density. An increase in current density up to 30-40 A/cm^2 without changing the spot dimension, makes it possible to substantially increase the radiation power of the tube. It is concluded that the optimization of tube characteristics should proceed along the lines of radiative material and electron optic system improvement. A schematic diagram of the tube is presented. Orig. art has: 4 figures.

2/2

I

A

UDC 621.373.029.67

USSR

KOZINA, G. S., KOSTINSKAYA, T. A., KURBATOV, L. N., TSEKHANOVICH, M. V., ALEKSEYEVA, L. A.

"New Electron-Beam Tube-Optical Laser Based on Electron Excitation"

Moscow, Radiotekhnika i Elektronika, Vol 15, No 2, 1970, pp 365-367

Abstract: The construction and characteristics of a sealed-off semiconductor laser with electron excitation produced by a gallium-arsenide crystal are described. Its basic characteristics are:

peak power	- 13 w.
average power	- 100 mw.
pulse duration	- 1 microsec.
pulse frequency	- up to 10kHz.

Samples of gallium-arsenide as n- and p- type with (1-4) x 10^{18} cm^{-3} concentration of impurities, cooled to liquid nitrogen temperature, are used as the radiative elements. The dependence of peak, P_{pulse}, and average, P_r, radiation powers on pulse

1/2

Organ and Tissue Transplantation

USSR

UDC: 616.12-089.843-089.168

FAL'KOVSKIY, G. E., KAZAKOV, E. N., YARLYKOVA, Ye. I., ASTRAKHANTSEVA, G. I., ALEKSEYEVA, L. A., KOBKOVA, I. D., SOKOLOV, M. V., GALANKINA, I. Ye., EDL'CHUKHINA, L. A., and GUDKOVA, R. G., Institute of Cardiovascular Surgery imeni A. N. Bakulev, Academy of Medical Sciences USSR, Moscow

"The fate of an Heterotopic Heart Allotransplant"

Moscow, Eksperimental'naya Khirurgiya i Anesteziologiya, No 6, Nov/Dec 70, pp 3-12

Abstract: Donor hearts transplanted to the iliac arteries of recipient dogs survived up to 15 days. The causes of cessation of transplant function during the first 48 hours were surgical complications (death of the recipient from the anesthetic, hemorrhages from the sutures, thrombosis). In the absence of such complications, the transplants continued to function 3 to 12 days average, (4.79 days) when immunodepressants were not used, and 3 to 8 days (average, 6.16 days) when they were. Cardiac arrest was preceded by arrhythmias, a decrease in voltage of the ventricular complex, and increase in lymphocytes in the peripheral blood following leukopenia. Immunomorphological changes in the recipient's lymphatic system preceded the morphological signs of rejection in the transplant (pronounced lymphoid-histiocyte infiltration, changes in the arteries, and metabolic disturbances in the myocardium).

1/1

UNCLASSIFIED PROCESSING DATE--30OCT70

2/2 039

CIRC ACCESSION NO--AP0112254

ABSTRACT/EXTRACT--(U) GP-0- ABSTRACT. THE CONSTRUCTION AND CHARACTERISTICS OF A SEALED OFF SEMICONDUCTOR LASER WITH ELECTRON EXCITATION PRODUCED BY A GALLIUM ARSENIDE CRYSTAL ARE DESCRIBED. THE BASIC CHARACTERISTICS ARE: PEAK POWER, 13 W. AVERAGE POWER, 100 MW. PULSE DURATION, 1 MICROSEC. PULSE FREQUENCY, UP TO 10KHZ. SAMPLES OF GALLIUM ARSENIDE AS N AND P TYPE WITH (1-4) TIMES 10 PRIME18 CM-3 CONCENTRATION OF IMPURITIES, COOLED TO LIQUID NITROGEN TEMPERATURE, ARE USED AS THE RADIATIVE ELEMENTS. THE DEPENDENCE OF PEAK, P SUBPULSE, AND AVERAGE, P SUB4, RADIATION POWERS ON PULSE ABSTRACT: FREQUENCY IS PLOTTED IN A GRAPH WHICH SHOWS THAT P SUBPULSE DECREASES WITH INCREASING FREQUENCY ABOVE 200 HZ AND THAT AT F EQUALS 10KHZ IS ONLY 17 PERCENT OF THE MAXIMUM VALUE. THE GRAPH ALSO SHOWS THAT THE AVERAGE POWER INCREASES TO A MAXIMUM AT 5-6KHZ. AN EFFICIENT WAY FOR INCREASING THE PEAK POWER IS TO INCREASE THE BEAM CURRENT DENSITY. AN INCREASE IN CURRENT DENSITY UP TO 30-40 A-CM PRIME2 WITHOUT CHANGING THE SPOT DIMENSION, MAKES IT POSSIBLE TO SUBSTANTIALLY INCREASE THE RADIATION POWER OF THE TUBE. IT IS CONCLUDED THAT THE OPTIMIZATION OF TUBE CHARACTERISTICS SHOULD PROCEED ALONG THE LINES OF RADIATIVE MATERIAL AND ELECTRON OPTIC SYSTEM IMPROVEMENT. A SCHEMATIC DIAGRAM OF THE TUBE IS PRESENTED.

UNCLASSIFIED

UNCLASSIFIED PROCESSING DATE--30OCT70

1/2 039

TITLE--NEW ELECTRON BEAM TUBE OPTICAL LASER BASED ON ELECTRON EXCITATION
-U-

AUTHOR-(05)-KOZINA, G.S., KOSTINSKAYA, T.A., KURBATOV, L.N., TSEKHANOVICH, H.V., ALEKSEYEVA, L.A.

COUNTRY OF INFO--USSR

SOURCE--MOSCOW, RADIOTEKHNIKA I ELEKTRONIKA, VOL 15, NO 2, 1970, PP 365-367

DATE PUBLISHED-------70

SUBJECT AREAS--PHYSICS

TOPIC TAGS--OPTIC PROPERTY, SEMICONDUCTOR LASER, GALLIUM ARSENIDE, ELECTRON BEAM EXCITATION

CONTROL MARKING--NO RESTRICTIONS

DOCUMENT CLASS--UNCLASSIFIED

PROXY REEL/FRAME--1992/1151 STEP NO--UR/0109/70/015/002/0365/0367

CIRC ACCESSION NO--AP0112254

UNCLASSIFIED

UNCLASSIFIED

PROCESSING DATE--16OCT70

2/2 017

CIRC ACCESSION NO--AP0048477

ABSTRACT/EXTRACT--(U) GP-0- ABSTRACT. JETS (15) WITH LARGE MULTIPLICITY WHICH WERE PRODUCED IN NUCLEAR PHOTOEMULSIONS BY N AND HEAVY NUCLEI FROM COSMIC RADIATION WERE ANALYZED. ANGULAR PARAMETERS OF ALL GRAY AND REALTIVISTIC TRACKS WERE MEASURED; THE NATURE OF THE SLOWEST PARTICLES WAS DETD. FROM ANGULAR DISTRIBUTIONS THERE IS CONCLUDED THAT THE ENERGY OF PRIMARY PARTICLES IS 1.2 TIMES 10 PRIME10-2.5 TIMES 10 PRIME13 EV-N. A METHOD OF DETG. THE NO. OF ELEMENTARY N-N INTERACTIONS INSIDE THE TARGET NUCLEUS ACCORDING TO THE NO. OF RECOIL N IS PROPOSED AND APPLIED. FROM PRELIMINARY RESULTS IT FOLLOWS THAT THE FOLLOWING HYPOTHESIS SEEMS TO BE QUITE RELIABLE: LARGE NULTIPLICITY JETS RESULT FROM THE SUPERPOSITION OF SEVERAL INDEPENDENT SUCCESSIVE ELEMENTARY INTERACTIONS OF THE PRIMARY N WITH N FROM THE TARGET NUCLEUS. IN THE MEANTIME, JETS OF PARTICLES FROM COMPLETELY FRAGMENTED PRIMARY HEAVY NUCLEI ARE THE RESULT OF SUPERPOSITION OF SEVERAL INDEPENDENT ELEMENTARY INTERACTIONS BETWEEN FRAGMENTATION N AND N OF THE TARGET. FACILITY: INST. YAD. FIZ., MOSK. GOS. UNIV., MOSCOW, USSR.

UNCLASSIFIED

UNCLASSIFIED PROCESSING DATE--16OCT70

1/2 017

TITLE--RESULTS OF A STUDY OF THE INTERACTION OF NUCLEONS AND HEAVY NUCLEI OF COSMIC RAYS WITH EMULSION NUCLEI BEYOND THE ATMOSPHERE -U-

AUTHOR--ALEKSEYEVA, K.I.

COUNTRY OF INFO--USSR

SOURCE--YAD. FIZ. 1970, 11(1), 184-91

DATE PUBLISHED--------70

SUBJECT AREAS--PHYSICS, METHODS AND EQUIPMENT

TOPIC TAGS--NUCLEON, HEAVY NUCLEUS, COSMIC RAY, EMULSION, NUCLEUS, ANGULAR DISTRIBUTION, ELEMENTARY PARTICLE

CONTROL MARKING--NO RESTRICTIONS

DOCUMENT CLASS--UNCLASSIFIED STEP NO--UR/0367/70/011/001/0184/0191

PROXY REEL/FRAME--1980/0185

CIRC ACCESSION NO--AP0048477

UNCLASSIFIED

USSR

ANZON, Z. V., ET AL, Izvestiya Akademii Nauk SSR. Seriya Fizicheskaya, No 9, 1970, pp 1938-1943

of the Soviet Union and countries of the Soviet bloc. The joint study was organized by the Photoemulsion Committee of the Joint Institute of Nuclear Research. The preliminary results of this project were presented at the International Conference on Elementary Particles in Lund in June 1969 and at the International Conference on Cosmic Rays in Budapest in August 1969. The path value of the coherent generation of three and five charged particles is obtained from the distribution of charged particles and the angular characteristics of secondary particles on the basis of multiplicity. Comparison of the path value with the corresponding values at lower and higher energies shows a decrease of the run (and, consequently, an increase of the coherent particle-generation cross section) as the energy increases. 5 figures, 11 bibliographic entries.

2/2

6

USSR

ANZON, Z. V., et al, Institute of Nuclear Physics, Academy of Sciences, Kazakh SSR, Alma-Ata; BOZOKI, G., et al, Central Research Institute of Physics, Budapest; DALKHAZHAV, N., et al, High-Energy Laboratory, Joint Institute of Nuclear Research, Dubna; BABETSKIY, Ya., et al, Laboratory of High-Energy Physics, Institute of Nuclear Research, Polish Academy of Sciences, Krakow; MASLENNIKOVA, N. V., TRET'YAKOVA, M. I., CHERNYAVSKIY, M. M., Physics Institute imeni P. N. Lebedev of the Academy of Sciences, USSR, Moscow; ALEKSEYEVA, K. I., Scientific Research Institute of Nuclear Physics, Moscow State University, Moscow; CHERNEV, Kh., TODOROV, P. T., Institute of Nuclear Physics, Academy of Sciences of the People's Republic of Bulgaria, Sofia; TUVDENDORZH, D., SHARKHI, D., CHADRAA, V., Institute of Physics and Mathematics of the Academy of Sciences, Mongol People's Republic, Ulan-Bator); AZIMOV, S. A., et al, Institute of Nuclear Physics Academy of Sciences, Uzbek SSR, Tashkent

"Coherent Generation of Particles by π^--Mesons With Momenta of 45 and 60 Gigaelectron-Volts/Sec on the Basis of Photoemulsion Nuclei"

Moscow, Izvestiya Akademii Nauk SSR. Seriya Fizicheskaya, No 9, 1970, pp 1938-1943

Abstract: In the present report are presented data concerning the coherent generation of π-mesons by π^--mesons at 45 and 60 gigaelectron-volts/sec, obtained by means of nuclear photoemulsion by the laboratories of a number of institutes

1/2

KOLYADIN, A. I., ALEKSEYEVA, K. G., Optiko-mekhanicheskaya promyshlennost', No. 2, Feb 71, pp 26-27

The example showed that the FM-94 photometer can considerably raise the accuracy of measuring the coefficients of light absorption of glass. Tests of the instrument have shown that despite certain structural deficiencies, it is fully satisfactory for its purpose.

2/2

USSR UDC 535.247.4 : 535.343

KOLYADIN, A. I., Doctor of Sciences, ALEKSEYEVA, K. G.

"A Method and Instrument for the Exact Measurement of Integral Light Absorption of High Transparency Glass"

Leningrad, Optiko-mekhanicheskaya promyshlennost', No. 2, Feb 71, pp 26-27

Abstract: The design of the FM-94 photometer is described that was developed to measure the coefficient of light absorption with an error not exceeding 0.01% per centimeter. It is noted that the technique and equipment currently used in industry to determine the coefficient of light absorption of optical glass can measure the transmission coefficient with an accuracy of 0.5% so that with its length of 10 centimeters it ensures a calculation of the coefficient of light absorption with an accuracy of 0.0005 or 0.05% per centimeter. This method has been in existence for two decades and does not answer the increasing requirements as to the transparency of optical glass, since glasses absorbing less than 0.05% per centimeter have been developed. An optical diagram of the two-channel photometer is given. An example was given of measurements of a sample of glass [illegible] of length 11 cm and it was found that the coefficient absorption [illegible] per cm.

1/2

USSR

USSR

ALEKSEYEVSKIY, M. A. et al., USSR Author's Certificate No 293242

to the search unit for the "one" furthest to the left in the priority registers, while the second input of the terminal flip-flop is connected through a logic circuit to the outputs of comparison circuits for protection codes. The inputs of these comparison circuits are connected to the decoder of the search unit for the "one" furthest to the left in the interrupt register, and to the outputs of the interrupt register, protection registers, and inhibit-enable flip-flops. The second outputs of these comparison circuits are connected through a logic circuit, the synchronization circuit and the initiate flip-flop to the search unit for the "one" furthest to the left in the interrupt register. The output of the interrupt register is connected to the input of the search unit for the "one" furthest to the left in the priority registers, and the other outputs are connected through diodes to the computer command counters. The synchronization circuit is connected to the inhibit-enable flip-flop for interruption of all computers.

2/2

USSR UDC: 681.332.65

ALEKSEYEVSKIY, M. A., GAL'PERIN, M. P., KOMINAROV, I. Z.

"A Device for Interrupting a Multicomputer System"

Moscow, Otkrytiya, izobreteniya, promyshlennyye obraztsy, tovarnyye znaki, No 5, Feb 71, Author's Certificate No 293242, Division G, filed 3 Mar 69, published 15 Jan 71, p 164

Translation: This Author's Certificate introduces a device for interrupting a multicomputer system. The device contains logic circuits, comparison circuits, diodes, flip-flops, a search module for the "one" furthest to the left, a command number register, an interrupt register, priority registers, protection registers and a synchronization circuit. As a distinguishing feature of the patent, the functional possibilities of the device are extended by connecting as many priority registers as there are computers to the inputs of the comparison circuits, connecting the second inputs of the comparison circuits to the search unit for the "one" furthest to the left in the priority registers, and connecting the outputs of the inhibit-enable flip-flops to the third inputs of the comparison circuits. Some outputs of the comparison circuits are connected to diodes between the command counters and the command number register. The other outputs are connected through a logic circuit to the terminate flip-flop. The outputs of this flip-flop are connected

1/2

2/2 008 UNCLASSIFIED PROCESSING DATE--04DEC70

CIRC ACCESSION NO--AA0136999

ABSTRACT/EXTRACT--(U) GP-0- ABSTRACT. SATD. ALIPHATIC ALDEHYDES ARE PREPD. BY CONDENSING LOWER ALDEHYDES OVER CO NAPHTHENATE OR STEARATE, AND HYDROGENATING THE UNSATD. ALDEHYDES OVER THE SAME SALTS WITH SYNTHESIS GAS (CO-H SUB2 1:1) AT 100-80DEGREES TO 150-250 ATM.

UNCLASSIFIED

1/2 008 UNCLASSIFIED PROCESSING DATE--04DEC70

TITLE--SATURATED ALIPHATIC ALDEHYDES -U-

AUTHOR-(05)-ALEKSEYEVA, K.A., DELNIK, V.B., YEFIMOVA, N.I., RUDKOVSKIY, D.M., TRIFEL, A.G.

COUNTRY OF INFO--USSR

A

SOURCE--U.S.S.R. 265,102
REFERENCE--OTKRYTIYA, IZOBRET., PROM. OBRAZTSY, TOVARNYE ZNAKI 1970,
DATE PUBLISHED--09MAR70

SUBJECT AREAS--CHEMISTRY

TOPIC TAGS--ALIPHATIC ALDEHYDE, ORGANIC SYNTHESIS, CHEMICAL PATENT

CONTROL MARKING--NO RESTRICTIONS

DOCUMENT CLASS--UNCLASSIFIED
PROXY REEL/FRAME--3007/1759 STEP NO--UR/0482/70/000/000/0000/0000

CIRC ACCESSION NO--AA0136999

UNCLASSIFIED

2/2 022 UNCLASSIFIED PROCESSING DATE--16OCT70

CIRC ACCESSION NO--AP0115156

ABSTRACT/EXTRACT--(U) GP-0- ABSTRACT. THE DATA ARE CITED ON THE COMPARATIVE SEROLOGICAL CHARACTERISTIC (ACCORDING TO THE COMPLEMENT FIXATION TEST) OF HEPATOCYTOTOXIC SERA OBTAINED BY MEANS OF RABBIT IMMUNIZATION WITH ISOLATED MITOCHONDRIA OF THE LIVER CELLS AND EXTRACTS OF THE WHOLE LIVER TISSUE UNDER STRICTLY ANALOGOUS CONDITIONS BY SIMILAR QUANTITIES OF ANTIGEN ACCORDING TO PROTEIN. IT IS SHOWN, THAT ANTIHEPATOCYTOTOXIC SERUM OBTAINED BY MEANS OF IMMUNIZATION WITH ISOLATED MITOCHONDRIA OF THE LIVER CELLS IS LESS ORGANOSPECIFIC, THAN THE SERUM OBTAINED BY IMMUNIZATION WITH THE EXTRACT OF THE WHOLE LIVER TISSUE AND ACCORDING TO IMMUNOLOGICAL ACTIVITY IN THE TEST OF COMPLEMENT FIXATION WITH HOMOGENATE OF THE LIVER IT DOES NOT ESSENTIALLY DIFFER FROM THE LATTER. FACILITY: DEPARTMENT OF EXPERIMENTAL THERAPEUTICS, THE A. A. BOGOMOLETZ INSTITUTE OF PHYSIOLOGY, ACADEMY OF SCIENCES, UKRAINIAN SSR.

UNCLASSIFIED

1/2 022 UNCLASSIFIED PROCESSING DATE--16OCT70

TITLE--COMPARATIVE SEROLOGICAL CHARACTERISTICS OF ANTIHEPATOCYTOTOXIC SERA OBTAINED BY MEANS OF IMMUNIZATION OF ANIMALS WITH ISOLATED MITOCHONDRIA

AUTHOR-(03)-SPASOKUKOTSKIY, YU.O., ALEKSEEVA, I.M., GALENKO, T.I.

COUNTRY OF INFO--USSR

SOURCE--FIZIOLOGICHNIY ZHURNAL, 1970, VOL 16, NR 3, PP 341-344

DATE PUBLISHED-------70

SUBJECT AREAS--BIOLOGICAL AND MEDICAL SCIENCES

TOPIC TAGS--RABBIT, IMMUNOLOGY, LIVER, MITOCHONDRION, ANTIGEN, PROTEIN, IMMUNE SERUM

CONTROL MARKING--NO RESTRICTIONS

DOCUMENT CLASS--UNCLASSIFIED

PROXY REEL/FRAME--1994/1137 STEP NO--UR/0238/70/016/003/0341/0344

CIRC ACCESSION NO--AP0115156

UNCLASSIFIED

2/2 015 UNCLASSIFIED PROCESSING DATE--20NOV70

CIRC ACCESSION NO--AP0126216

ABSTRACT/EXTRACT--(U) GP-0- ABSTRACT. A HIGHLY SENSITIVE METHOD WAS DEVELOPED FOR OS (VIII) DETN. ON THE BASIS OF ITS CATALYTIC ACTION IN THE REACTION BETWEEN I PRIME NEGATIVE AND BRO SUB3 PRIME NEGATIVE IN AN ACID MEDIUM. OS (VIII) REACTS WITH I PRIME NEGATIVE TO FORM AN ACTIVE COMPLEX, WHICH LATER REACTS WITH BRO SUB3 PRIME NEGATIVE. MAX. CATALYTIC ACTION OF OS EXISTS AT PH 2.8-4.5. CU, CO, NI, FE, AND AL, 100 FOLD AMTS., DO NOT INTERFERE IN OS DETN. FACILITY: MOSCOW INST. FINE CHEM. TECHNOL., MOSCOW, USSR.

UNCLASSIFIED

1/2 015 UNCLASSIFIED PROCESSING DATE--20NOV70

TITLE--KINETIC METHOD FOR DETERMINING TRACE AMOUNTS OF OSMIUM BY USING IODIDE OXIDATION BY BROMATE IN AN ACID MEDIUM -U-

AUTHOR-(03)-ALEKSEYEVA, I.I., SMIRNOVA, I.B., YATSIMIRSKIY, K.B.

COUNTRY OF INFO--USSR

SOURCE--ZH. ANAL. KHIM. 1970, 25(3), 539-43

DATE PUBLISHED--------70

SUBJECT AREAS--CHEMISTRY

TOPIC TAGS--TRACE ANALYSIS, IODIDE, OXIDATION, BROMATE, OSMIUM, METAL CHEMICAL ANALYSIS

CONTROL MARKING--NO RESTRICTIONS

DOCUMENT CLASS--UNCLASSIFIED

PROXY REEL/FRAME--3001/0464 STEP NO--UR/0075/70/025/003/0539/0543

CIRC ACCESSION NO--AP0126216

UNCLASSIFIED

USSR

ALEKSEYEVA, G. P., and MESHCHANINOV, B. N., Metallovedeniye i Termicheskaya Obrabotka Metallov, No 8, 1970, pp 12-14

to the extent of 0.9-1.0%.

2/2

UDC 669.15'26'786-194

USSR

ALEKSEYEVA, G. P., and MESHCHANINOV, B. N.

"Low-Alloy 12% Chrome Steel With Nitrogen"

Moscow, Metallovedeniye i Termicheskaya Obrabotka Metallov, No 8, 1970, pp 12-14

Abstract: A study was made to find a steel with a higher creep limit than the refractory steels 1Kh12N2VMF (EI961) and EI-736. The 12%-chromium steel investigated had no nickel but did contain nitrogen, and had a total of 1-1.5% of carbide-forming elements other than the chromium. The carbon content of the investigated samples was between 0.14 and 0.23%. A table gives chemical compositions 10 samples of the 12%-chromeim steel and for the 1Kh12N2VMF steel. A second table and a curve show the effect of tempering on the steel samples. X-ray analysis of the specimens after full thermal processing and after creep tests performed for 500 hours at 600° C showed tha the toughening phase was $M_{23}C_6$ and M(CN). The steel samples were also tested for mechanical characteristics and corrosion in distilled water, under local and tropical atmospheric conditions, and showed satisfactory immunity to corrosion for five to six months. If the steel is to be used in cast form, the nitrogen must be replaced by nickel

1/2

AA0008574

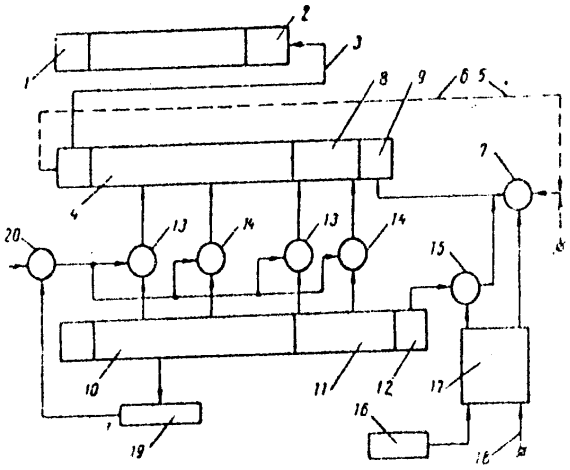

19550746

DJ

3/3

AA0008574

with the junior additional division 9 of the summator. The zero entrance of the trigger is connected with the chain 18 of the beginning of operations, and the unit exit is connected with the circuit 16 of selection of "K" of the first shifts. The exit of the circuit 19 of determination of zero of the divisor is connected with the valve 20 of permission of rewriting the divisor on the summator. 12.7.66. as 1089598/18-24. E.D.ALEKSEEVA and A.I. STARSHINOV (6.2.69.) Bul.32/17.10.68. Class $42m^3$. Int.Cl. G06f.

19550745

43

AA0008574 - ALEKSEYEVA ED UR 0482

Soviet Inventions Illustrated, Section II Electrical, Derwent, 81

229039 MULTIPLIER AND DIVIDER contains a summator 4, a register 10, of the multiplicand and the divisor with additional divisions, and a register 1 of the factor and the quotient. In order to reduce the amount of equipment, the device contains a trigger 12, the zero exit of which is connected with the potential entrance of the valve. The pulse entrance of the valve is connected with the chain 5 of units of additions. The unit exit of the trigger is connected with the potential entrance of another valve, the pulse entrance of which is connected with the rounding division 12 of the register of the multiplicand and the divisor. The exits of both valves are connected

19
5
1
25

4

19550744

1/3

2/2 012 UNCLASSIFIED PROCESSING DATE--30OCT70

CIRC ACCESSION NO--AP0119636

ABSTRACT/EXTRACT--(U) GP-0- ABSTRACT. C SUB5 C SUB6 HYDROCARBONS FOR USE AS GAS CHROMATOG. STDS. WERE PREPD. BY CATALYTIC REACTIONS, E. G., DEHYDRATION OF AMYL ALCS. OVER MODIFIED CA SUB3 (PO SUB4) SUB2 AND AL SUB2 O SUB3. ISOMERIZATION OF OLEFINS ON CAA ZEOLITE OR OF HEXENES ON PD-C, AND BY HYDROGENATING HEXENES. THE REACTIONS WERE CARRIED OUT UNDER DYNAMIC CONDITIONS IN A GLASS TUBE MICROREACTOR. FACILITY: NII SIN. SPIRT. ORG. PROD., MOSCOW, USSR.

UNCLASSIFIED

1/2 012 UNCLASSIFIED PROCESSING DATE--30OCT70

TITLE--MICROSYNTHESIS OF HYDROCARBONS FOR DETERMINING GAS CHROMATOGRAPHIC PARAMETERS -U-

AUTHOR-(02)-KUGUCHEVA, YE.YE., ALEKSEYEVA, A.V.

A

COUNTRY OF INFO--USSR

SOURCE--ZAVOD. LAB. 1970, 36(3), 271-3

DATE PUBLISHED-------70

SUBJECT AREAS--CHEMISTRY

TOPIC TAGS--HYDROCARBON SYNTHESIS, GAS CHROMATOGRAPHY, DEHYDRATION, ALCOHOL, ISOMERIZATION, ALKENE, ZEOLITE, HYDROGENATION, CATALYSIS

CONTROL MARKING--NO RESTRICTIONS

DOCUMENT CLASS--UNCLASSIFIED

PROXY REEL/FRAME--1997/0729 STEP NO--UR/0032/70/036/003/0271/0273

CIRC ACCESSION NO--AP0119636

UNCLASSIFIED

General questions of the application of gas chromatography in the petroleum refining and petrochemical industry were examined in the report of the chief chemist of the Technological Administration of the Ministry, Yu. A. Bogoslovskiy.

The report of [illegible] devoted to the most promising direction of the development of gas chromatography. The main attention, in the opinion of the author, should be given to theoretical and applied investigations directed toward the elaboration of methods of improving gas-chromatographic separation and identification of chromatographic zones, the acceleration of chromatographic analysis and the improvement of methods of analyzing mixtures. The survey of publications on the given theme showed that gas chromatography has become the basic method of analysis of organic compounds in analytical chemistry.

Much interest was aroused by the report of A. A. Zhukhovitskiy et al in which the role of adsorption effects in gas-liquid chromatography and methods of their quantitative consideration were characterized.

I. F. Oglobline dwelt on the question, urgent for petrochemistry, of the standardization of gas-chromatographic procedures. She substantiated the need for their very rapid standardization, pointing out the sources of errors of experimentators connected with the lack of a solution of that problem.

The development of highly sensitive methods of analyzing mixtures is especially important in the investigation of monomers and other high-purity substances. Now volatile stable compounds in concentrations of 10^{-5} - 10^{-4}% can be determined by means of gas chromatography (A. V. Alekseyeva and Ye. Ye. Kugucheva). The same method permits analyzing compounds with a boiling point of up to 700°C (N. S. Nikitina, V. A. Zakurpa and Ye. Ye. Mysak).

Distinctive features of the investigation of oxygen-containing compounds were examined by Yu. N. Bogoslovskiy.

Gas chromatography is used more and more as a method of automatic control of the composition of technological streams. In the report of A. F. Andreyev et al it was reported that now at least 20% of the total number of industrial analyzers consist of automatic chromatographs; in 1963-1971 the total saving from the application of industrial chromatographs, in the opinion of the authors, amounted to at least 60 million rubles in the presence of capital expenditures of not more than 9 million rubles.

APPROVED FOR RELEASE: 06/23/11: CIA-RDP86-00513R002065900016-6

(15)

USE OF GAS CHROMATOGRAPHY IN PETROCHEMISTRY

(Conference in Moscow)

[Article by Doctor of Chemical Sciences V. V. Berezkin, Moscow, Vestnik Akademii Nauk SSSR, Russian, No 6, June 1973, pp 127-129]

Increase of the effectiveness of scientific investigations and growth of the productivity and rate of chemical processes used in industry are stipulated to a considerable degree by the successful development of new physicochemical methods of conducting scientific experiments and controlling production. One such method is gas chromatography. Many quantitative determinations previously considered practically impossible are performed by means of gas chromatography in the course of minutes, and in some cases even of seconds. The method has high resolution and sensitivity, is readily automated, and makes it possible to effectively control technological processes.

The scientific councils for Petrochemistry and Chromatography, the Institute of Petrochemical Synthesis imeni A. V. Topchiyev of the AS USSR and the Scientific and Technological Council of the Ministry of Petroleum-Refining and Petrochemical Industry USSR conducted on 5-9 February the first All-Union Conference on the Use of Gas Chromatography in Petrochemistry. Participating in it were over 200 persons representing over 90 scientific research organizations, enterprises, special design offices and VUZ. Thirty-four reports were heard.

In his introductory speech the Chairman of the Scientific Council for Chromatography of the AS USSR K. V. Chmutov noted the ever-increasing importance of gas chromatography in the analysis of complex mixtures in petroleum refining and petrochemistry, in studying the thermodynamics of absorption and adsorption and the processes of chemisorption and catalysis, and in determining the diffusive characteristics of gases and liquids and other physicochemical characteristics.

ALEKSEYEVA, A.V.